นายวิชญสัณห์ เศรษฐบุตร
6872087421 CPS

FACULTY OF ENGINEERING
CHULALONGKORN UNIVERSITY
2103535 MECHATRONICS
Midterm Examination, Pre TEST

Wire the signal and cable lines such that the Raspberry Pi Pico can
a) fully drive the permanent magnet DC motor using VHN5019 driver board
b) Interface with button, SPDT switch, and LED

Wire the signal line, the power line, and ground for this system. Design interface circuits (if required) such that the Raspberry Pi PICO can interface with the mentioned devices. Use **Red** for voltage reference, **Black** for ground, **Green** or **Yellow** for Digital signal and **Blue** Analog signal. Use **Thick** line for the power cable. List the equipment needed for this project.

Devices
a) VHN5019 driver board (https://www.pololu.com/product/1451)

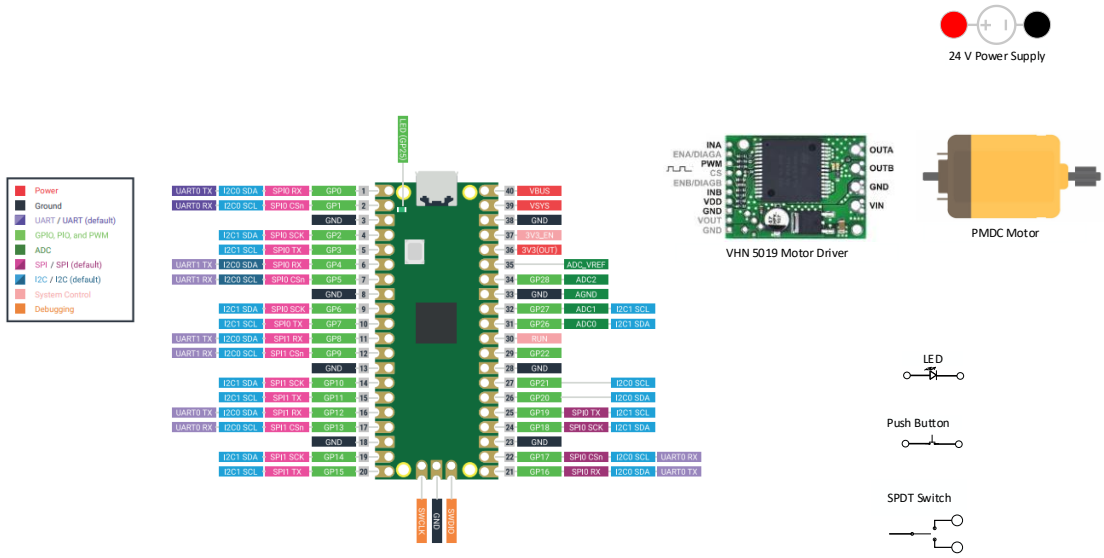

Then, write a python program such that
Then, write a Python program that:

a) Cuts power to the motor when the Push Button is pressed.
b) Uses an SPDT switch to control the direction of motion.
c) LED is on when the motor moves forward, blink when the motor moves backward, and off when there is no power to the motor.

นายวิชญ์สัณห์ เศรษฐบุตร
6872087421 CPS

Write a Python code in this area.

```python
import math
import time
from picozero import Button, LED, Motor, Pot

# ---------------------------------------------
# Constants
# ---------------------------------------------
SWING_FREQ_HZ   = 10
LOOP_DT_MS      = 1         # 1ms loop (Better to use integers for ticks)
LOOP_DT_S       = 0.001

LED_BLINK_MS    = 250       # 2Hz blink = 500ms cycle (250ms ON / 250ms OFF)

# ---------------------------------------------
# Hardware Initialization
# ---------------------------------------------
button   = Button(14)
led      = LED(15)
ele_pot  = Pot(27)
azi_pot  = Pot(26)

motor_azi = Motor(19, 18)
motor_ele = Motor(21, 20)

# Set the Hardware PWM frequency to 10Hz (as per your previous requirement)
def set_hw_freq(m, hz):
    if hasattr(m._forward, '_pwm'):
        m._forward._pwm.freq(hz)
        m._backward._pwm.freq(hz)

set_hw_freq(motor_azi, 10)
set_hw_freq(motor_ele, 10)

# ---------------------------------------------
# State
# ---------------------------------------------
stopped      = True         # Start in stopped state for safety
led_blink_t  = time.ticks_ms()
led_blink_on = False
phase        = 0.0

# ---------------------------------------------
# Helpers
# ---------------------------------------------

def stop_motors():
    motor_azi.stop()
    motor_ele.stop()

def drive_motors(phase, azi_amp, ele_amp):
    # Sinusoidal oscillation: -1.0 to +1.0
    velocity = math.sin(phase)

    # Calculate speeds based on sine wave and Potentiometer amplitude
    azi_speed = abs(velocity) * azi_amp
    ele_speed = abs(velocity) * ele_amp

    if velocity >= 0:
        motor_azi.forward(azi_speed)
        motor_ele.forward(ele_speed)
    else:
        motor_azi.backward(azi_speed)
        motor_ele.backward(ele_speed)

# ---------------------------------------------
# Callbacks
# ---------------------------------------------

def on_button_pressed():
    global stopped
    stopped = True
    stop_motors()

def on_button_released():
    global stopped, phase
    stopped = False
    phase = 0.0 # Reset swing to start
    led.on()

button.when_pressed  = on_button_pressed
button.when_released = on_button_released

# ---------------------------------------------
# Main Loop
# ---------------------------------------------
# How much the sine wave moves forward every 1ms
phase_increment = 2.0 * math.pi * SWING_FREQ_HZ * LOOP_DT_S

print("System Ready. Release button to start.")

while True:
    now = time.ticks_ms()

    if not stopped:
        # 1. Drive Motors
        drive_motors(phase, azi_pot.value, ele_pot.value)

        # 2. Advance Phase
        phase = (phase + phase_increment) % (2.0 * math.pi)

    else:
        # LED Blink logic (Only runs when stopped)
        if time.ticks_diff(now, led_blink_t) >= LED_BLINK_MS:
            led_blink_on = not led_blink_on
            led.value = led_blink_on
            led_blink_t = now

    time.sleep_ms(LOOP_DT_MS)
```
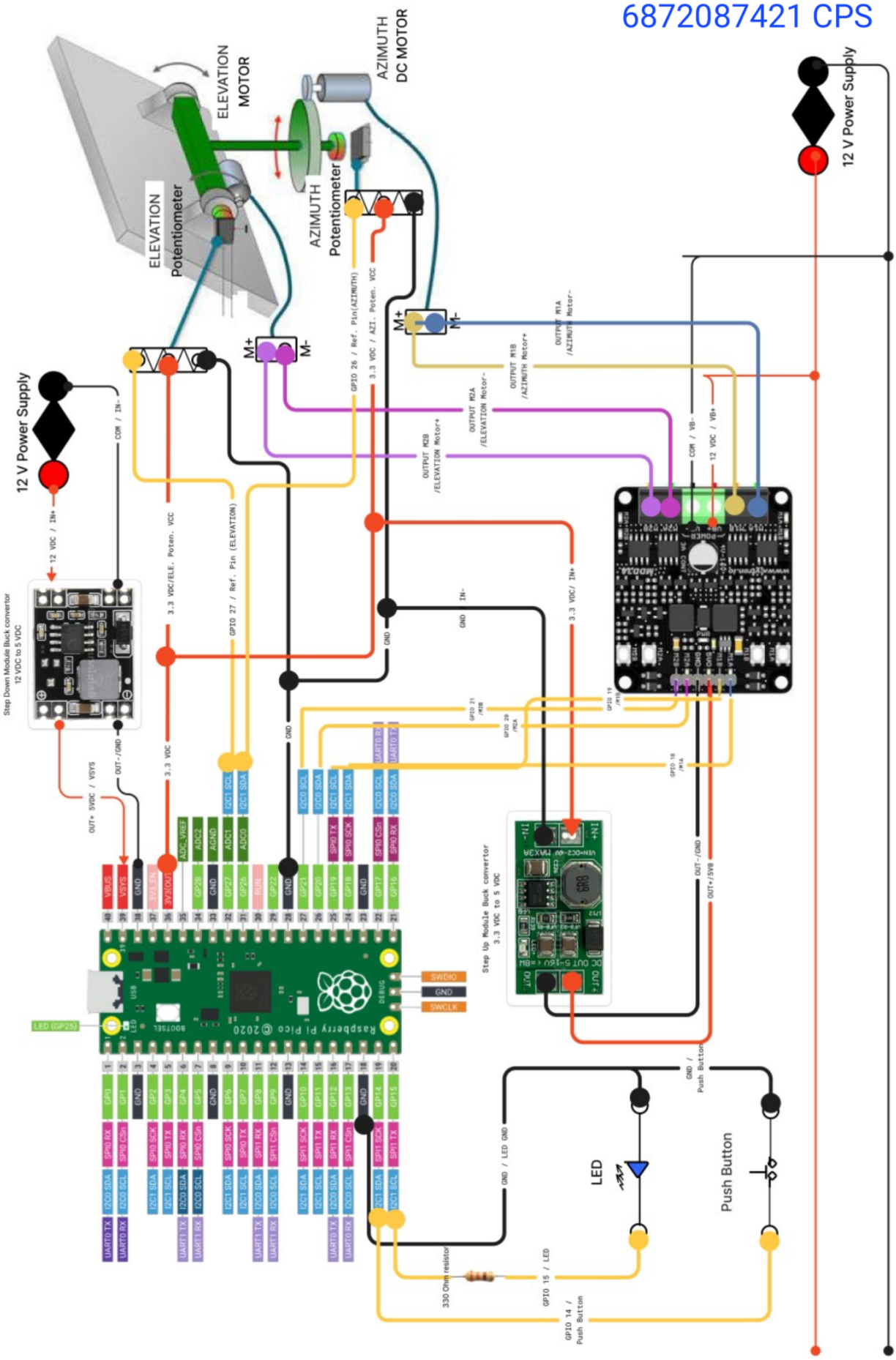
นายวิชญสัณห์ เศรษฐบุตร
6872087421 CPS