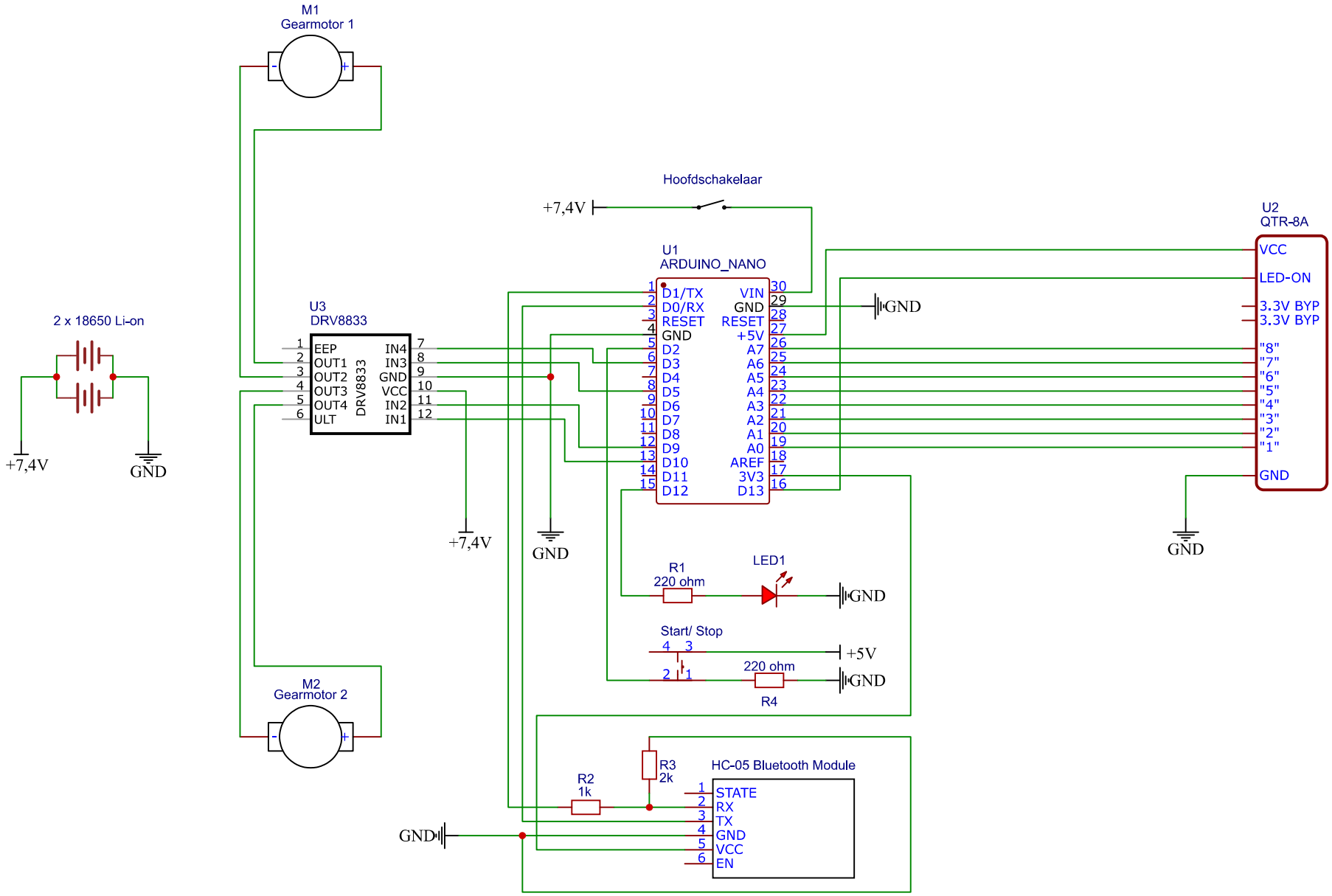

TITLE: Line follower		REV: 1.0
嘉立创EDA	Company: HOGENT	Sheet: 1/1
	Date: 2022-10-13 Drawn By: victordv	