5V and 3V3 voltage regulators

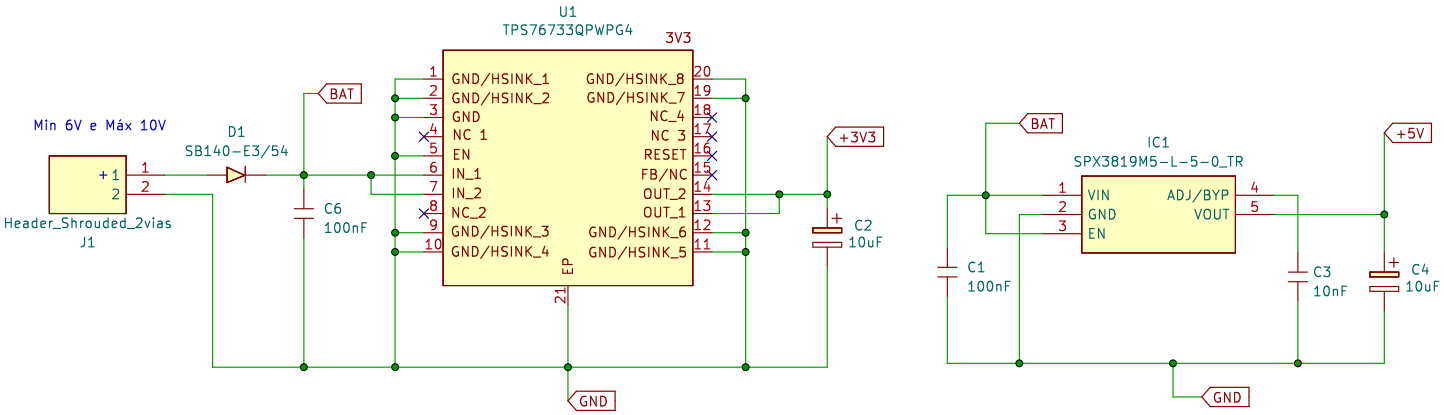

5 way connector

GND TX RX DTR RTS

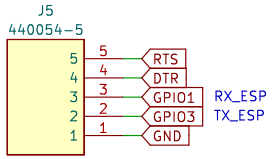

ESP32 microcontroller

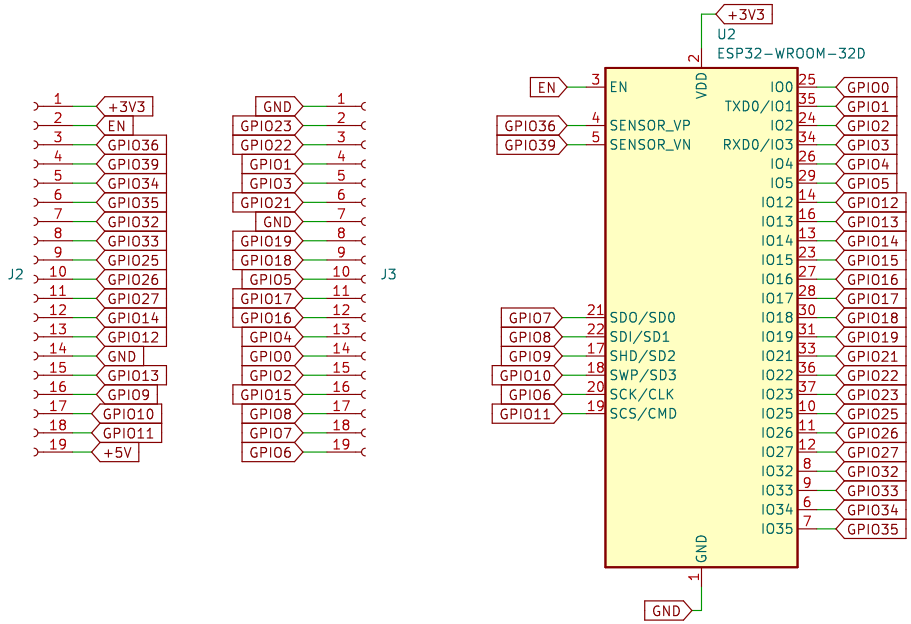

Write pins and boot and enable buttons

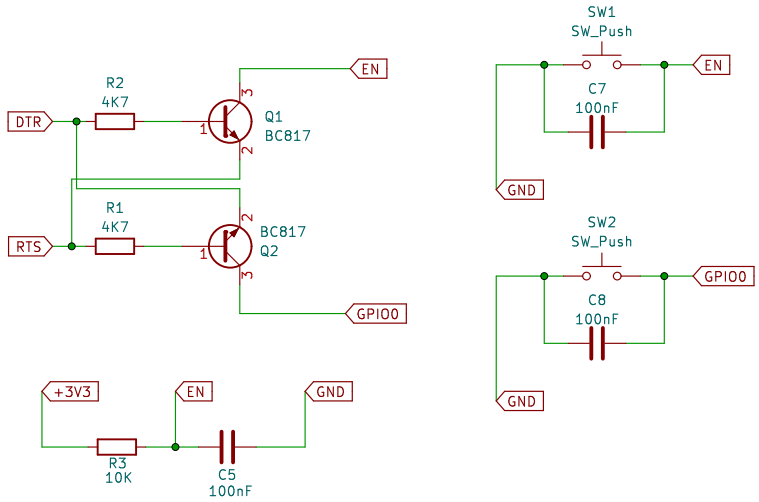

Sheet: /
File: Ravanesh.kicad_sch

Title: Ravanesh low energy

Size: A4	Date: 11/05/2023	Rev: 1.0
KiCad E.D.A. eeschema 7.0.2		Id: 1/1