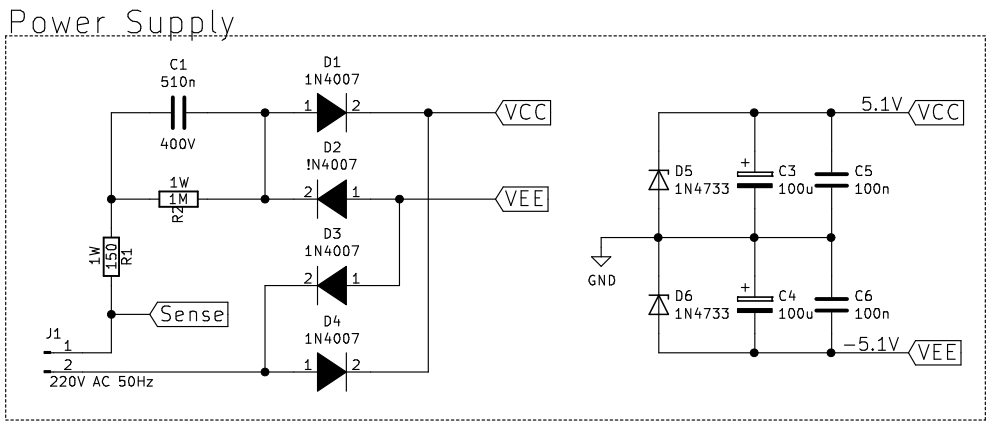

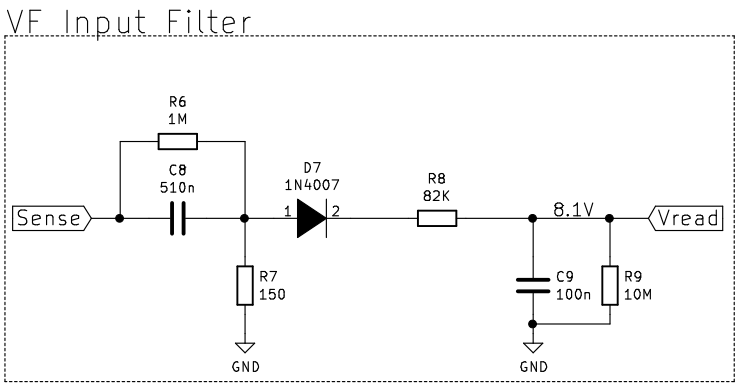

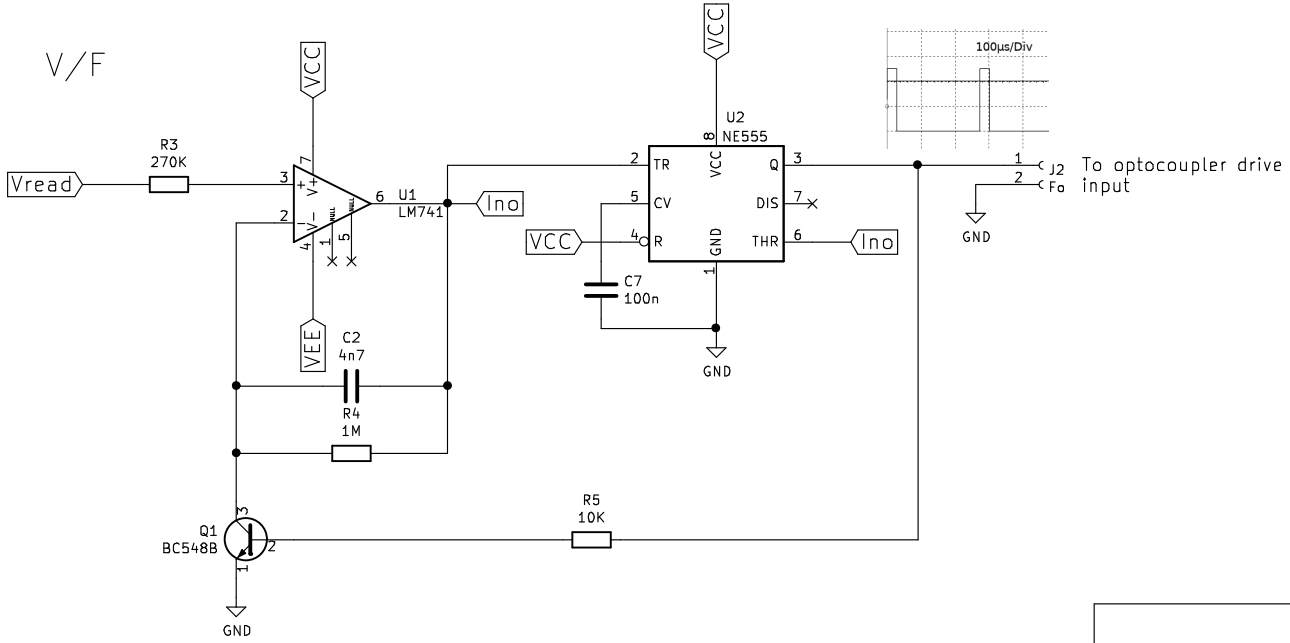

Sheet: /
File: IsolatedAnalogRead.sch

Title: Optoisolated Analog Voltmeter

Size: A4	Date: 2018-08-12	**Rev: 1.0**
KiCad E.D.A. kicad 5.0.0-fee4fd166ubuntu18.04.1		Id: 1/1