# VISVESVARAYA TECHNOLOGICAL UNIVERSITY

BELAGAVI-590018,KARNATAKA

## MINI PROJECTREPORT

## ON

## "SMART HOME AUTOMATION"

SUBMITTED IN FULFILLMENT OF THE REQUIREMENT FOR THE

ACADEMIC YEAR 2024-25

**BACHELOR OF ENGINEERING**
**IN**
**ELECTRONICS AND COMMUNICATION ENGINEERING**

**Submitted**
**By**


| | |
|---|---|
| **THARUN U** | **1SJ21EC158** |
| **VIDHYA SHREE M** | **1SJ21EC167** |

Under the guidance of
Dr. C Rangaswamy
Professor and HOD

DEPARTMENT OF ELECTRONICS AND COMMUNICATION ENGINEERING
**SJC INSTITUTE OF TECHNOLOGY**
CHICKABALLAPUR–562101

||JaiSriGurudev||

Sri Adichunchanagiri Shikshana Trust®

# SJC INSTITUE OF TECHNOLOGY

Chickballapur-562101

## Department of Electronics and Communication

## CERTIFICATE

This is to certify the mini project work entitled is a bonified work carried out by THARUN U (1SJ21EC158) and VIDHYA SHREE M (1SJ21EC167) in partial fulfillment for the award of degree of Bachelor of engineering [B.E] in Visvesvaraya Technological University, Belagavi during February to May in the year 2024. It is certify that all corrections/suggestions indicated for the internal assessment from the external guide of have been incorporated in the report with seal and signature. The report has been approved as it been satisfies the academic requirements in the respect of project work prescribed for the above said degree.

Signature of HOD

| | |
|---|---|
| Dr Sudir P | Dr C Rangaswamy |
| Professor | Prof and HOD |

# ACKNOWLEDGEMENT

Remembering with reverence, I offer my pranamas at the lotus feet of Byravaikya padmabushana Paramapoojya Jagadguru Sri Sri Sri Dr. Balagangadharnatha Mahaswamiji.

Submitting devote pranamas and seeking the blessings of his holiness Paramapoojya Jagadguru Sri Sri Sri Dr. Nirmalanandanatha Mahaswamiji and Poojya Sri Sri Mangalanatha Swamiji.

I owe my sincere gratitude to principal Dr. G T Raju SJC institute of technology, Chikkaballapur for the continuous support, encouragement and insightful suggestions which helped me to successfully complete the project work.

I would like to acknowledge the help extended by Dr. C Rangaswamy our guide , Professor and head of the department of Electronics and Communication Engineering, SJC Institute of Technology, Chikballapur for supporting me to carry out this Project work and for his guidance and support, without his encouragement this report would not have materialized.

I would also like to thank entire staff of Department of Electronics and Communication Engineering, SJC institute of Technology, Chikballapur for their support.

I would like to thank my parents and friends who have supported me for completion of the project work. It goes without the inputs of all the people mentioned above, this report would not have been possible.

THARUN U -1SJ21EC158

VIDHYA SHREE M -1SJ21EC167

# DECLARATION

We, the undersigned students of the Department of Electronics and communication at SJC Institution of Technology, hereby declare that the mini-project titled "Smart home automation" is an original and independent work conducted by us during the VI semester. This project has been completed under the supervision of Dr C Rangaswamy, who has provided invaluable guidance and support throughout the process.

We affirm that this project has not been submitted to any other institution for any degree or diploma. All sources of information and data used have been appropriately cited and acknowledged. The work presented in this project is solely our own, and any assistance received from other sources has been explicitly acknowledged.

We understand the implications of academic misconduct, including plagiarism, and confirm that this project adheres to the academic integrity standards of SJC Institution of Technology. We take full responsibility for the content of this project.

**Signatures:**

1. THARUN U

2. VIDHYA SHREE M

**Guide/Advisor Approval:**

Dr C RANGASWAMY

# CONTENTS pg no

1. Certificate I
2. Acknowledgement II
3. Declaration III
4. Abstract
5. Objective
6. Literature survey
7. Methodology
8. Results and discussion
9. Conclusion and future scope
10. References

Table of figures


| | | |
|---|---|---|
| **Figure4.1** | Block diagram of project | 12 |
| **Figure4.2** | Circuit diagram | |
| **Figure4.4** | ESP32NodeMCUMicrocontroller | 15 |
| **Figure3.2** | DHT11Sensor | 17 |
| **Figure3.3** | Rainwater Sensor | 18 |
| **Figure3.4** | MQ135Sensor | 19 |
| **Figure3.5** | LDRsensor | 21 |
| **Figure3.6** | Buzzer | 22 |
| **Figure3.7** | LCD | 23 |
| **Figure3.8** | PCB Board | 25 |
| **Figure3.9** | SOS Button | 27 |
| **Figure3.10** | 12v2A Adapter | 28 |
| **Figure4.1** | Arduinosoftwareinterface | 30 |
| **Figure4.2** | Arduino menusection | 31 |
| **Figure4.3** | Arduinotoolbar section | 31 |
| **Figure4.4** | Codeeditor selection | 32 |
| **Figure4.5** | Statusbar section | 32 |
| **Figure4.6** | Programnotification section | 33 |
| **Figure4.7** | Serialportselection | 33 |
| **Figure4.8** | BoardSelection | 34 |
| **Figure5.1** | Overviewofthe module | 36 |
| **Figure5.2** | BlynkApp Output | 37 |

# CHAPTER 1

# ABSTRACT

The proposed system aims to enhance convenience, security, and energy efficiency in home environments through seamless integration of various smart devices and sensors. Key features include remote monitoring and control of household appliances, real-time data collection, and automated responses based on predefined conditions. The system is designed to be user-friendly, cost-effective, and scalable, with potential applications in residential as well as commercial settings. This project highlights the architecture, technologies, and methodologies employed in creating the integrated smart home solution, and presents experimental results demonstrating its effectiveness and reliability.

The system leverages the wireless connectivity and processing power of the ESP32 NodeMCU to achieve seamless communication between devices and the central controller. The methodology concludes with a discussion of the findings, emphasizing the effectiveness of using ESP32 and Firebase for home automation, and suggesting potential enhancements for future work.

Key features include real-time monitoring of environmental parameters such as temperature and humidity, as well as the ability to control appliances like lights and fans through a web- based interface. The ESP32 is chosen for its robust connectivity options and processing capabilities.

# CHAPTER 2

## OBJECTIVES

Our proposed system has the following objectives.

- Automate routine tasks such as controlling lighting, adjusting and controlling fan to enhance user convenience and comfort. This can include scheduling devices to turn on/off or adjusting settings based on user preferences.
- Optimize the use of energy within the home by using lightings, and fans that can be programmed to operate only when needed, reducing energy consumption and utility costs.
- Enable users to monitor and control home systems remotely via smartphones, tablets, or computers. This objective allows homeowners to check the status of their devices and make adjustments from anywhere with an internet connection.
- Reduce household costs by optimizing the use of resources, preventing waste, and providing insights into energy usage. Home automation systems can analyze consumption patterns and suggest ways to save money.

# CHAPTER 3

## LITERATURE SURVEY

Dasa, Manish, et al, [1] By combining centralized control mechanisms with distributed IoT devices, the system aims to overcome the limitations of conventional approaches, offering enhanced scalability, flexibility, and reliability. The review would likely analyze the system architecture, elucidating how IoT devices are integrated and coordinated within the overall framework. It would delve into the specific functionalities enabled by this hybrid approach, such as real-time monitoring, remote control, and intelligent automation.

Jampana, et al, [2] rapid advancement in Internet of Things (IoT) technology has revolutionized various sectors, including home automation. This paper presents an integrated smart home automation system that leverages IoT to enhance the efficiency, security, and convenience of modern homes. The proposed system integrates various IoT devices and sensors to create a cohesive network that allows for remote monitoring and control of home appliances and systems.

Koushal, et al, [3] enables users to remotely monitor and control various home devices through a mobile or web interface, leveraging Firebase's capabilities for data storage, synchronization, and real-time updates. The paper likely describes the system architecture, including the integration of ESP32 microcontrollers with Firebase, as well as the communication protocols and data flow between devices and the Firebase server.Additionally, it may discuss the implementation of features such as user authentication, data encryption, and error handling to ensure security and reliability.

Niranjana, R., et al, [4] system is anticipated to offer a comprehensive solution for automating various tasks within a household environment. The review would critically analyze the architecture of the system, including the hardware setup and communication protocols employed. Furthermore, it would delve into the specific functionalities enabled by the ESP32 NodeMCU microcontrollers, such as remote appliance control, environmental monitoring, security features, and energy management. Evaluating the performance of the system would be crucial, considering factors such as responsiveness, reliability, scalability, and energy efficiency.

Shukla et al, [5] focusing on how the ESP32 Cam and ESP8266 modules are integrated and utilized for load automation and surveillance purposes. It would delve into the functionalities enabled by these modules, such as remote access surveillance, real-time monitoring, and load control mechanisms. Additionally, the review would evaluate the effectiveness of the system in terms of reliability, responsiveness, and scalability.

Pujari, Uma, et al, [6] Provide a comprehensive list of all sources reviewed in the survey, allowing readers to explore the literature further. This structure gives an idea of how a literature survey might be organized and what topics it could include. The actual survey by Pujari, Uma, et al., would provide specific details and findings based on their research and analysis of the existing literature. we would expect an overview of existing research and developments in home automation systems, highlighting key advancements, challenges, and future directions. While I don't have access to the exact content of that specific survey.

Pravalika, V et al, [7] The Internet of Things (IoT) has revolutionized home automation by enabling the seamless integration of devices and systems for improved control and monitoring. Early studies focused on the potential of IoT to transform various sectors, with home automation being a prime area of application. This overview provides a structured view of the typical contents you might expect in a literature survey section of the specified paper, based on common themes and research in the field of IoT and home automation using ESP32.

Aldawira et al, [8] the significant advancements in IoT-based door security systems, particularly with the use of ESP32. While these systems offer enhanced security and convenience, ongoing research is needed to address challenges related to security, interoperability, and user adoption. This outline provides a structured view of what the

terature survey in the specified paper might cover, based on common themes and research in the field of IoT and home security systems.

Khanchuea et al, [9] Smart home and building automation technologies utilize IoT to enhance efficiency, security, and user convenience. These systems allow for the remote control and monitoring of various devices, improving the overall living and working environment. IoT gateways serve as critical components in these systems, bridging various communication protocols and enabling seamless device interaction. They are essential for managing data flow between local devices and cloud services.

Marco Carvalho et al, [10] Convenience features such as voice control, scheduling, and remote access improve users' quality of life. User surveys highlight high satisfaction rates due to the increased comfort and ease of managing home environments. The increased connectivity of devices poses risks related to data breaches and unauthorized access. Literature emphasizes the importance of robust security measures to protect user data and privacy.

# CHAPTER 4

# BLOCKDIAGRAM ANDITSDESCRIPTION

## BLOCKDIAGRAM:

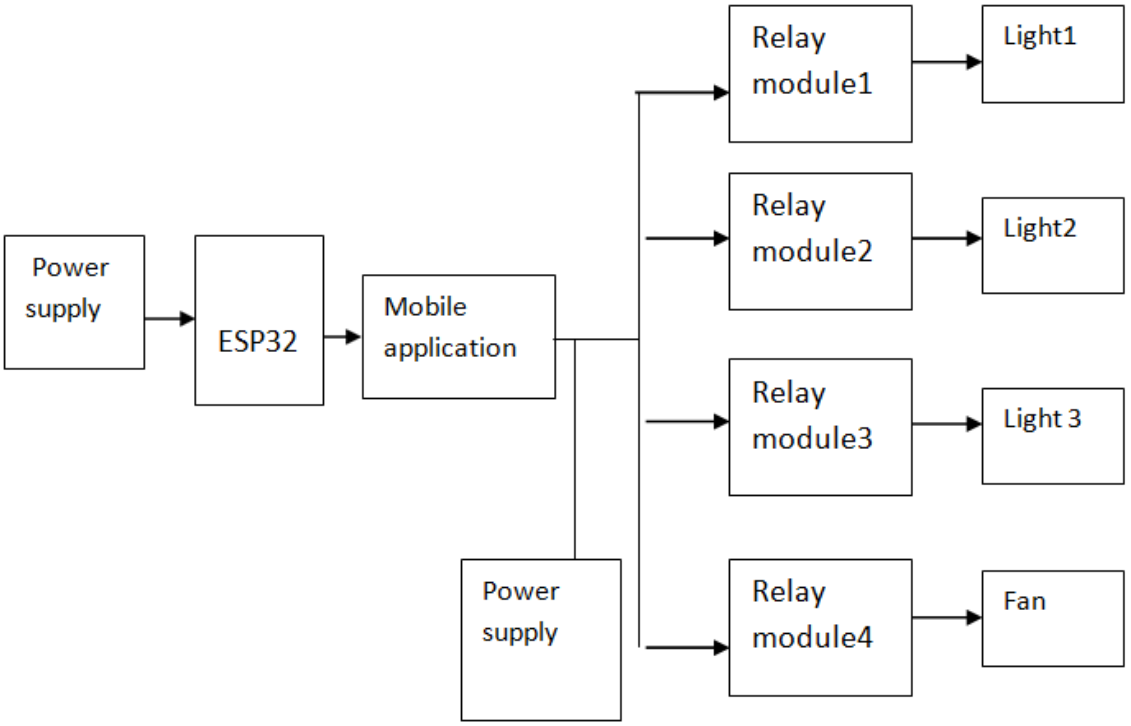


Fig 4.1 :BlockDiagramoftheSystem

DESCRIPTION

In Fig 2.1 Block diagram, The home automation system depicted in the block diagram integrates several essential components to provide seamless control over household devices. Central to the system is the **ESP32 microcontroller**, which acts as the hub for managing and automating device operations. The ESP32 receives commands from the **Mobile Application**, which users utilize to control various aspects of their home environment, such as lights and fans. This mobile app communicates wirelessly with the ESP32, typically using WiFi, allowing users to manage their devices remotely from smartphones or tablets.

The **Power Supply** is crucial for providing the necessary electrical power to the entire system. It ensures that the ESP32, relay module, and other components operate efficiently. The **Relay Module** connects to the ESP32 and controls the **Relays**, which act as switches to manage high-power devices. Each relay can be activated or deactivated based on signals from the ESP32, thus controlling the **Lights** and **Fans**.

The **Relays** are the key components that handle the actual switching of electrical circuits. When the ESP32 sends a control signal, the relay activates or deactivates the connected devices. The **Lights** and **Fans** are the end devices being controlled, providing illumination and ventilation respectively.

Overall, the system enables users to automate and remotely manage their home environment efficiently. By integrating these components, the system enhances convenience, improves energy efficiency, and offers a flexible control mechanism through the mobile application. This setup not only simplifies home management but also provides greater control over household operations.

The home automation system described in the block diagram integrates several key components to create a seamless and efficient control mechanism for household devices. Central to this system is the **ESP32 microcontroller**, which acts as the central control unit. The ESP32 interacts with other components to manage and automate devices such as lights and fans based on user inputs. The system is designed to provide users with the convenience of remote control and automation, enhancing overall home management and energy efficiency.

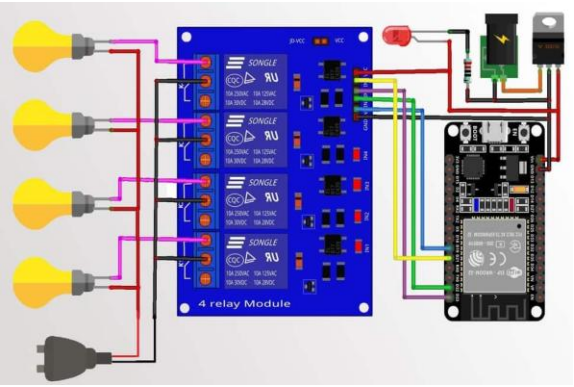


Fig 4.2 Circuit diagram

# HARDWARE AND SOFTWARE REQUIREMENTS

## HARDWAREREQUIREMENTS:

### 1. ESP32 Microcontroller :-

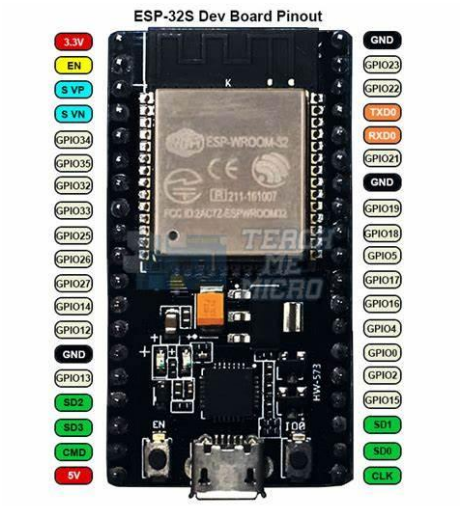


Fig 4.3 ESP32 Microcontroller

The ESP32 microcontroller is a versatile and powerful component widely used in home automation systems. It brings several advantages that enhance the functionality, flexibility, and efficiency of home automation setups.

**Central Control Unit :-**The ESP32 serves as the central control unit in home automation systems. Its role involves receiving and processing commands from various input sources, such as mobile applications or voice assistants. The ESP32's processing power allows it to handle multiple tasks simultaneously, enabling it to manage and coordinate various devices and sensors within the home efficiently.

**Wireless Communication:** One of the standout features of the ESP32 is its built-in wireless communication capabilities. It supports both WiFi and Bluetooth, making it ideal for wireless control and monitoring. This allows users to interact with their home automation system from

anywhere within the network range using a smartphone or tablet. The ESP32's wireless features facilitate seamless integration with smart devices and sensors, enabling remote control and automation.

**Connectivity and Integration:-** The ESP32 is highly compatible with various sensors and actuators commonly used in home automation. It can interface with temperature sensors, motion detectors, and smart locks, among others. This connectivity allows for the creation of sophisticated automation scenarios, such as adjusting heating based on temperature readings or triggering lights when motion is detected. The ESP32's ability to integrate with these devices enhances the overall functionality of the home automation system.

**Low Power Consumption**:- Despite its powerful features, the ESP32 is designed for energy efficiency. Its low power consumption mode is particularly advantageous in battery-operated applications, such as remote sensors or battery-powered smart devices. This efficiency helps in extending the operational life of battery-powered components and contributes to the overall energy efficiency of the home automation system.

**Customization and Programming:-**The ESP32 offers extensive customization options through its programmable nature. Developers can write custom firmware to implement specific functionalities, such as complex automation rules or integration with other smart home ecosystems. This flexibility allows users to tailor their home automation system to meet unique needs and preferences.

In summary, the ESP32 is a cornerstone of modern home automation due to its central control capabilities, wireless communication, connectivity with various devices, low power consumption, and customization options. These features collectively enhance the efficiency, convenience, and adaptability of home automation systems.

## 2. Relay Module:-

**Figure 4.4 Relay module**

Relay modules play a crucial role in home automation systems by acting as intermediaries between low-power control circuits and high-power electrical devices. Here's an overview of their uses and significance:

**Control of High-Power Devices**:- In home automation, relay modules are essential for controlling high-power appliances like lights, fans, and HVAC systems. These devices typically operate at voltages and currents that exceed the safe operating limits of low-power control circuits such as microcontrollers (e.g., ESP32) or switches. Relay modules allow these low-power controllers to safely manage high-power devices by acting as electrically isolated switches.

**Isolation and Safety:-** Relay modules provide electrical isolation between the control circuit (e.g., ESP32) and the high-power devices. This isolation prevents electrical interference and protects the microcontroller from potential damage caused by high voltage or current surges. It enhances the safety of the system, ensuring that the control electronics are not exposed to potentially hazardous electrical conditions.

**Automation and Scheduling**:- Relay modules enable the automation of home appliances based on predefined schedules or triggers. For instance, a relay can be programmed to turn on a light at sunset or to activate a fan when a temperature sensor detects high temperatures. This capability facilitates energy-efficient operation and enhances user convenience by automating routine tasks.

**Remote Control:-**With relay modules integrated into a home automation system, users can remotely control high-power devices via a smartphone or computer. The relay modules respond to commands sent from the central control unit (like the ESP32) and switch devices on or off as needed. This remote control feature is particularly useful for managing devices from different locations or ensuring that appliances are turned off when not in use.

**Multi-Device Control:-**Relay modules often come with multiple relays in a single unit, allowing control of several devices simultaneously. This is beneficial for managing multiple appliances or lighting circuits from a single control point. For example, a multi-channel relay module can control both the living room lights and the ceiling fan with a single interface.

**Integration with Other Components:-** Relay modules easily integrate with other components of a home automation system, such as sensors and timers. They can be used in conjunction with various input devices to create complex automation scenarios. For instance, a relay module can work with motion detectors to turn on lights when motion is detected or with timers to manage appliance operation based on time.

In summary, relay modules are indispensable in home automation systems for their ability to control high-power devices safely, provide electrical isolation, enable automation and remote control, and integrate with other system components. They enhance the functionality and flexibility of home automation, making it easier to manage and automate various aspects of modern living environments.

## 3.Bulbs:-

**Figure 4.5 Bulb**

In home automation, **bulbs** are utilized in several key ways to enhance convenience, energy efficiency, and ambiance. Here's a brief overview of their uses:

**1. Automated Lighting:-**Bulbs can be controlled automatically based on schedules or triggers. For instance, they can be programmed to turn on at specific times, such as sunrise or sunset, or in response to motion detected by sensors. This automation ensures that lighting is always optimized for comfort and security without manual intervention.

**2. Remote Control:-** With home automation systems, bulbs can be controlled remotely via smartphones, tablets, or computers. This allows users to adjust lighting levels, turn bulbs on or off, or change colors (if using smart bulbs) from anywhere, enhancing convenience and energy management.

**3. Mood and Ambiance:-**Smart bulbs can be adjusted to different colors and brightness levels, allowing users to create customized lighting environments for various activities and moods. For example, users can set warm lighting for relaxation or bright, cool lighting for working.

**4. Energy Efficiency:-**Automated control of bulbs helps in reducing energy consumption. By scheduling lights to turn off when not needed or using dimming features, users can lower their electricity bills and contribute to energy conservation.

**5. Integration with Other Systems:-**Bulbs can be integrated with other smart home systems, such as security or environmental control systems. For instance, they can flash or change color as an alert during security breaches or be controlled based on ambient light levels.

In summary, bulbs in home automation systems provide enhanced control over lighting, contribute to energy efficiency, support customizable environments, and integrate seamlessly with other smart home functionalities.

## 4. Fan:-

**Figure 4.6 Fan**

In home automation, **fans** are used to improve comfort, enhance energy efficiency, and integrate with various smart home functionalities. Here's a brief overview of their uses:

**1. Automated Operation:-** Fans can be automated to operate based on schedules or environmental conditions. For example, they can be programmed to turn on when the temperature exceeds a certain threshold or turn off at specific times. This automation helps maintain a comfortable environment without manual adjustments.

**1. Remote Control:-** Fans can be controlled remotely through smartphones, tablets, or voice assistants. This feature allows users to adjust fan speeds, turn the fan on or off, or set timers from anywhere, offering convenience and control over home climate.

**2. Energy Efficiency:-** Smart fans can contribute to energy savings by operating only when needed. For instance, fans can be set to turn off when a room is empty or reduce speed when the temperature drops, helping to lower electricity consumption and reduce utility bills.

**3. Integration with Climate Control Systems:-** Fans can be integrated with smart thermostats or temperature sensors. For example, a fan can be activated when a smart thermostat detects high temperatures, or it can be used to distribute conditioned air more effectively throughout the space.

**4. Enhanced Comfort:-** Fans can be used to improve air circulation and ventilation in a room. By automating their operation, users can ensure consistent airflow, which enhances comfort and prevents areas from becoming stuffy or overheated.

In summary, fans in home automation systems provide enhanced comfort, energy efficiency, and convenience by enabling automated operation, remote control, and integration with climate control systems.

## Adapter:-

**Figure 4.7 Adapter**

Adapters play a crucial role in home automation systems by providing connectivity, compatibility, and control capabilities for various devices and technologies. Here are some common uses of adapters in home automation:

1. **Protocol Conversion**:-Many home automation systems use different communication protocols like Zigbee, Z-Wave, Wi-Fi, Bluetooth, and more. Adapters can serve as bridges to convert signals between different protocols, enabling devices from different manufacturers to communicate seamlessly.
2. **Power Adaptation**:- Some smart devices require specific power inputs that might not be directly available from a standard outlet. Power adapters ensure that these devices receive the correct voltage and current.
3. **Connectivity Expansion**:- Network adapters can extend connectivity options, allowing wired devices to connect to a wireless network or vice versa. This is particularly useful for integrating older devices into modern smart home systems.
4. **Device Integration**:-Smart home hubs often use adapters to connect and control various devices, such as lights, thermostats, cameras, and more. These adapters can translate commands from the hub into actionable instructions for the devices.

5. **Audio/Video Solutions**:- Audio and video adapters allow different types of media equipment to work together. For example, an HDMI adapter might connect a streaming device to a television with different input/output standards.
6. **Sensor and Actuator Interfaces**:- Adapters can be used to connect sensors (like temperature, humidity, motion) and actuators (like relays, motors) to a central home automation system, ensuring data flow and control commands are correctly interpreted and executed.
7. **Smart Plug Adapters**:- These adapters can turn ordinary electrical outlets into smart outlets, allowing users to control plugged-in devices remotely or through automation rules.
8. **Legacy Device Support**:- Adapters can enable older appliances and systems to be integrated into a smart home setup. For example, a smart IR adapter can control an older television or air conditioner using infrared signals.
9. **Security Systems Integration**:- Adapters help in integrating various components of a security system, such as cameras, alarms, and sensors, to work together under a unified platform for better monitoring and control.

# SOFTWAREREQUIREMENTS:

OperatingSystem:Windows7/10 IDE Used: Adruino cloud Coding Language:- Embedded IOT remote

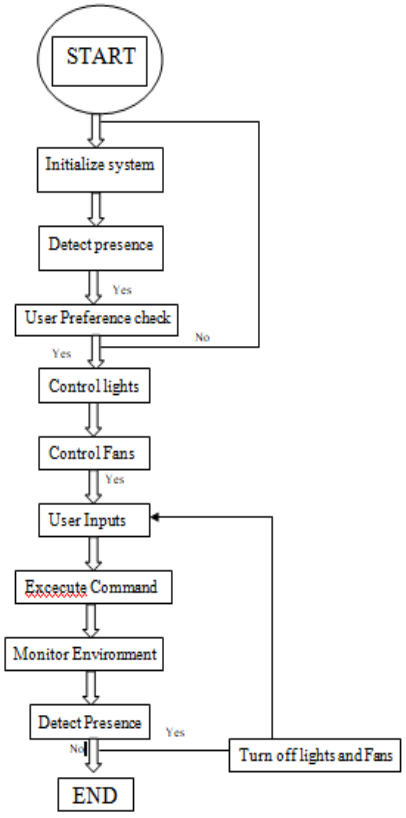

# CHAPTER 5

# RESULTS AND DISCUSSION

## RESULTS:-

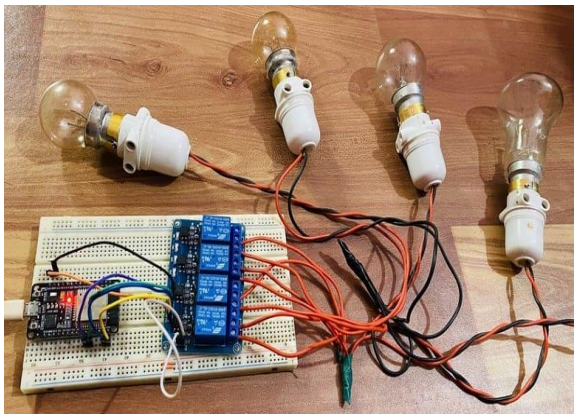

**Figure 5.1 Prototype 1**

**Figure 5.2 Prototype2**

Home automation significantly enhances convenience for homeowners by allowing them to control various devices and systems remotely. Whether it's adjusting the thermostat, turning on the lights, or checking the security cameras, everything can be managed through smartphones or voice commands. This ability to control home systems from anywhere simplifies daily routines and adds a layer of comfort, making life easier and more manageable.

One of the key benefits of home automation is improved energy efficiency. Automated systems can intelligently manage energy usage by adjusting lighting, heating, and cooling based on occupancy and time of day. For example, smart thermostats can learn your habits and adjust temperatures automatically, reducing unnecessary energy consumption. This optimization not only helps in conserving energy but also results in significant savings on utility bills.

Home automation systems also enhance security by integrating features such as smart locks, cameras, motion detectors, and alarms. These devices can be monitored and controlled remotely, providing real-time alerts and notifications of any suspicious activity. This level of security integration offers peace of mind, knowing that your home is protected and you can respond swiftly to any security threats. Another advantage of home automation is the ability to customize and personalize your living environment. Homeowners can set up specific

scenarios and routines, such as "Good Morning" or "Away Mode," to automatically adjust settings like lighting, temperature, and entertainment systems. This personalization allows for a tailored experience that meets individual preferences and enhances the overall comfort of the home.

Implementing home automation can also increase property value. Homes equipped with smart technology are often more appealing to potential buyers, who are attracted to the convenience and modernity these systems provide. This can be a significant selling point in the real estate market, potentially boosting the market value of a property.

Home automation can greatly improve accessibility for individuals with disabilities or mobility challenges. Features like voice-controlled systems and automated routines enable these individuals to manage daily tasks with ease, reducing the need for physical interaction with various devices. This increased accessibility fosters independence and enhances quality of life.

By automating routine tasks, such as watering the garden or adjusting window blinds, homeowners can save time and effort. This time savings allows them to focus on more important activities, reducing stress and making daily life more efficient. Automation simplifies household management, freeing up time for leisure and family.

Moreover, home automation provides valuable insights into home management. Many systems offer data on energy consumption and usage patterns, helping homeowners make informed decisions about maintenance and efficiency improvements. This information can lead to a more sustainable home environment and further energy savings.Remote monitoring and control of home systems offer additional peace of mind, especially when homeowners are away. Being able to check in on security cameras, receive alerts about unusual activity, and adjust home settings from anywhere in the world ensures that the home remains secure and well-managed at all times.

Finally, home automation systems often integrate with popular smart assistants like Amazon Alexa, Google Assistant, or Apple HomeKit. This integration enables seamless control through voice commands, creating a unified smart ecosystem. Such compatibility enhances the user experience and makes managing various home systems more intuitive and enjoyable.

# DISCUSSION

Home automation is a rapidly growing field that integrates technology into residential environments to enhance convenience, efficiency, and security. The discussion around home automation encompasses several aspects, including its benefits, challenges, and future potential. Here's an in-depth exploration of these elements:

**Benefits of Home Automation**

**Convenience and Control:** One of the primary advantages of home automation is the convenience it offers. Homeowners can control various devices and systems, such as lighting, heating, cooling, and security, from a central hub or remotely via smartphones and tablets. This remote access allows for easy management of home environments, whether you're at home or away.

**Energy Efficiency:** Automated systems contribute significantly to energy efficiency by optimizing the use of household resources. Smart thermostats, for instance, can learn a family's schedule and adjust heating and cooling accordingly, minimizing energy waste. Similarly, smart lighting can turn off automatically when rooms are unoccupied, reducing electricity consumption and lowering utility bills.

**Enhanced Security:** Home automation systems often include integrated security features like smart locks, surveillance cameras, and motion sensors. These devices provide real-time alerts and allow homeowners to monitor their properties remotely, increasing the security of their homes. The ability to lock doors, view camera feeds, and receive security alerts from anywhere enhances peace of mind.

**Customization and Personalization:** Automation allows for the customization of home environments based on personal preferences. Users can create routines and scenarios—such as "Morning Mode" or "Night Mode"—to automatically adjust settings like lighting, temperature, and entertainment systems. This level of personalization improves the quality of life by creating environments tailored to individual needs.

# PERFORMANCE ANLYSIS

Performance analysis of home automation involves evaluating how effectively and efficiently home automation systems meet the needs of users. This analysis encompasses several dimensions, including functionality, reliability, energy efficiency, user satisfaction, and overall impact on daily living. Here's a detailed exploration of these aspects:

**Functionality and Integration**

**Device Compatibility and Interoperability:** A critical factor in the performance of home automation systems is how well different devices work together. Performance analysis involves assessing the compatibility of devices from various manufacturers and their ability to seamlessly communicate. The effectiveness of protocols like Zigbee, Z-Wave, Wi-Fi, and newer standards like Matter in ensuring interoperability is crucial to evaluate.

**Ease of Use and Accessibility:** The user interface of home automation systems should be intuitive and easy to navigate. Performance is often measured by how quickly and easily users can set up and manage their devices, create automation routines, and control their systems. Accessibility features, such as voice control and mobile app interfaces, play a significant role in overall user satisfaction.

**Reliability and Security**

**System Reliability:** Home automation systems must be reliable, with devices responding accurately and consistently to user commands and automation scripts. Performance analysis

includes monitoring system uptime, response times, and the frequency of failures or malfunctions. Ensuring reliable connectivity, especially in areas with weak Wi-Fi signals, is also a key performance metric.

**Security Measures:** Given the connectivity of smart home devices, robust security is essential. Performance analysis involves evaluating the strength of security protocols, including data encryption, authentication processes, and vulnerability management. Regular software updates and patch management are important factors in maintaining the security of home automation systems.

## Energy Efficiency

**Energy Savings and Optimization:** One of the major benefits of home automation is energy efficiency. Performance analysis examines how effectively automation systems reduce energy consumption. This includes measuring the impact of smart thermostats, lighting controls, and other automated devices on overall energy usage. The analysis also considers the accuracy of sensors in detecting occupancy and adjusting settings accordingly.

**Integration with Renewable Energy:** For homes using renewable energy sources, the ability of home automation systems to optimize energy usage and storage is a key performance indicator. This includes assessing how well systems manage power from solar panels, battery storage, and grid usage to minimize energy costs and environmental impact.

# CHAPTER 5

# CONCLUSION AND FUTURE SCOPE

## CONCLUSION

Home automation has emerged as a transformative force in modern living, reshaping how we interact with and manage our homes. It offers unparalleled convenience by allowing homeowners to control various devices and systems remotely, from lighting and climate control to security and entertainment. This ease of access simplifies daily routines and enhances the overall user experience, making home management more efficient and enjoyable. One of the most significant benefits of home automation is its contribution to energy efficiency. By intelligently managing resources, smart home systems optimize energy usage and reduce waste. Devices like smart thermostats and lighting systems automatically adjust settings based on occupancy and user habits, leading to substantial energy savings and lower utility bills. These improvements support global sustainability efforts by reducing the carbon footprint of households and promoting the use of renewable energy sources, such as solar panels, to further enhance efficiency. In addition to convenience and energy savings, home automation significantly enhances home security. Integrating smart locks, cameras, motion sensors, and alarm systems into a unified platform provides comprehensive security solutions. Homeowners can monitor and control these systems remotely, receiving real-time alerts and updates, which increases their sense of safety and allows for quick responses to potential threats.

## FUTURE SCOPE

The future scope of home automation is vast and promising, with advancements in technology continuing to enhance its capabilities and accessibility. As artificial intelligence and machine learning evolve, smart home systems will become more intuitive and adaptive, learning user preferences to optimize energy usage and improve convenience automatically. This will lead to more personalized living environments where systems anticipate and respond to individual needs seamlessly.

The integration of home automation with renewable energy sources, such as solar panels andwind turbines, will further enhance sustainability. Smart systems will efficiently manage energy consumption and storage, reducing reliance on non-renewable resources and lowering utility costs. As the Internet of Things (IoT) continues to expand, more devices will be interconnected, creating

cohesive ecosystems that offer comprehensive control over various aspects of the home, from lighting and climate to security and entertainment.

Additionally, advancements in voice recognition and natural language processing will improve the functionality and user experience of home automation systems. This will make smart homes more accessible to individuals with disabilities or those who prefer hands-free operation. As these technologies continue to develop, home automation will play an increasingly integral role in shaping smarter, more sustainable, and user-friendly living spaces.

# REFERENCES

[1]. Dasa, Manish, et al. "20 Hybrid home automation system using IoT." Advances in Networks, Intelligence and Computing: Proceedings of the International Conference On Networks, Intelligence and Computing (ICONIC 2023). CRC Press, 2024.

[2]. Jampana, J. Gowthami, et al. "Smart Home Automation System with Status Feedback Based on Esp32 and IoT." Harshita and Rani, P. Sobha, Smart Home Automation System with Status Feedback Based on Esp32 and Iot (April 9, 2022) (2022).

[3]. Koushal, Ankit, et al. "Home Automation System Using ESP32 and Firebase." 2022 Seventh International Conference on Parallel, Distributed and Grid Computing (PDGC). IEEE, 2022.

[4].Niranjana, R., et al. "Effectual home automation using ESP32 NodeMCU." 2022 International Conference on Automation, Computing and Renewable Systems (ICACRS). IEEE, 2022.

[5]. Shukla, Abhinab, and Ritesh Diwan. "IoT based load automation with remote access surveillance using ESP 32 Camand ESP 8266 module." Annals of the Romanian Society for Cell Biology (2021): 6904-6914.

[6].Pujari, Uma, et al. "Internet of things based integrated smart home automation system." 2nd International Conference on Communication & Information Processing (ICCIP). 2020.

[7].Pravalika, V., and Ch Rajendra Prasad. "Internet of things based home monitoring and device control using Esp32." International Journal of Recent Technology and Engineering 8.1S4 (2019): 58-62

. [8]. Aldawira, Cornelio Revelivan, et al. "Door security system for home monitoring based on ESp32." Procedia Computer Science 157 (2019): 673-682.

[9]. Khanchuea, Kanitkorn, and Rawat Siripokarpirom. "A multi-protocol IoT gateway and WiFi/BLE sensor nodes for smart home and building automation: Design and implementation." 2019 10th International Conference of Information and Communication Technology for Embedded Systems (IC-ICTES). IEEE, 2019.

[10]. Building Smart Home Automation Solutions with Home Assistant written by Marco Carvalho , Packt Publishing, Limited, 2023.

[11].Developing IoT Projects with ESP32: Automate Your Home Or Business with Inexpensive Wi-Fi Devices written by Vedat Ozan Oner , Packt Publishing, 2021.

[12].https://cloud.arduino.cc/