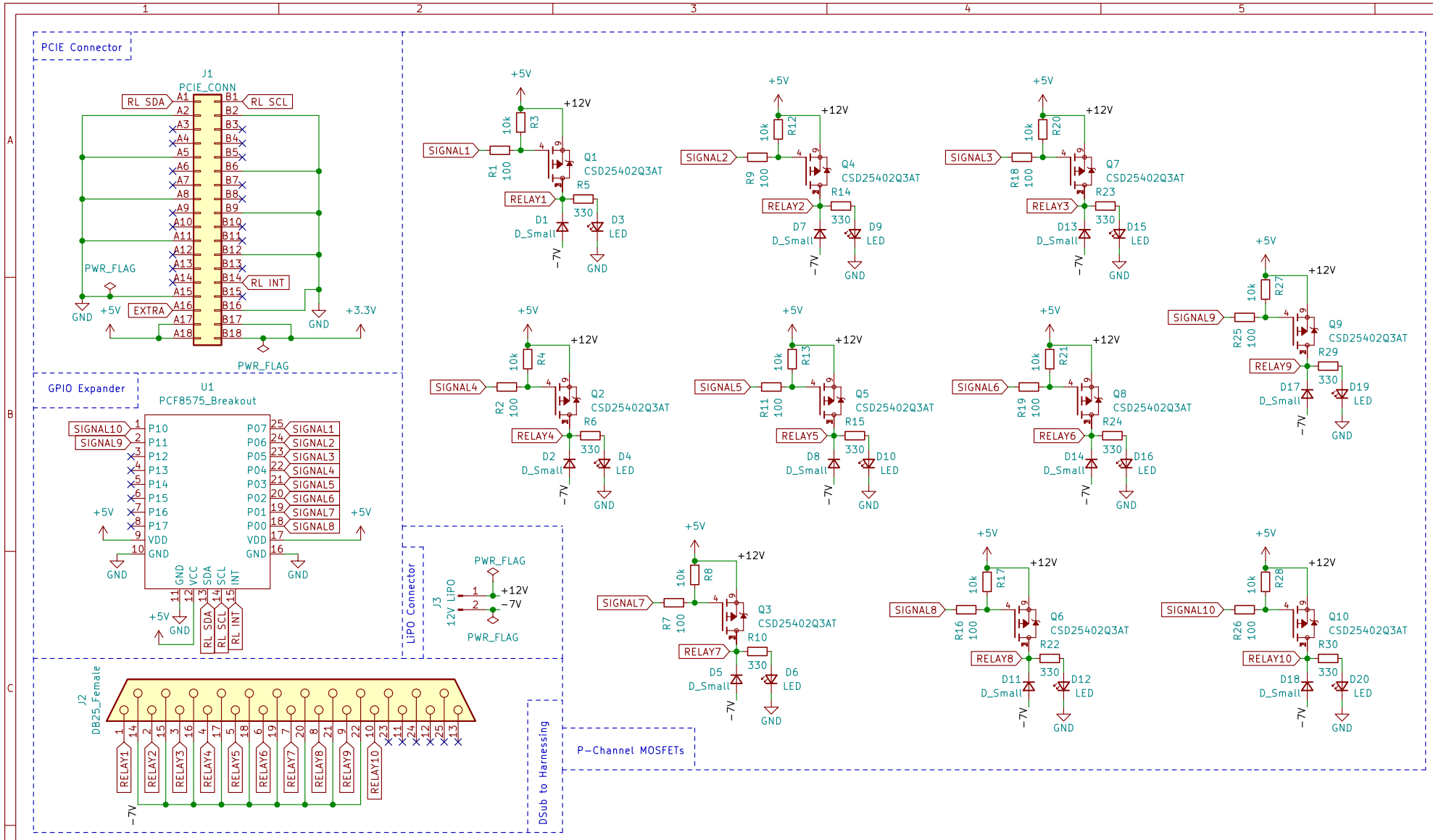

Sheet: /
File: relay−board.kicad_sch

Title:

Size: A4	Date:	**Rev:**
KiCad E.D.A. eeschema (6.0.6−0)		Id: 1/1