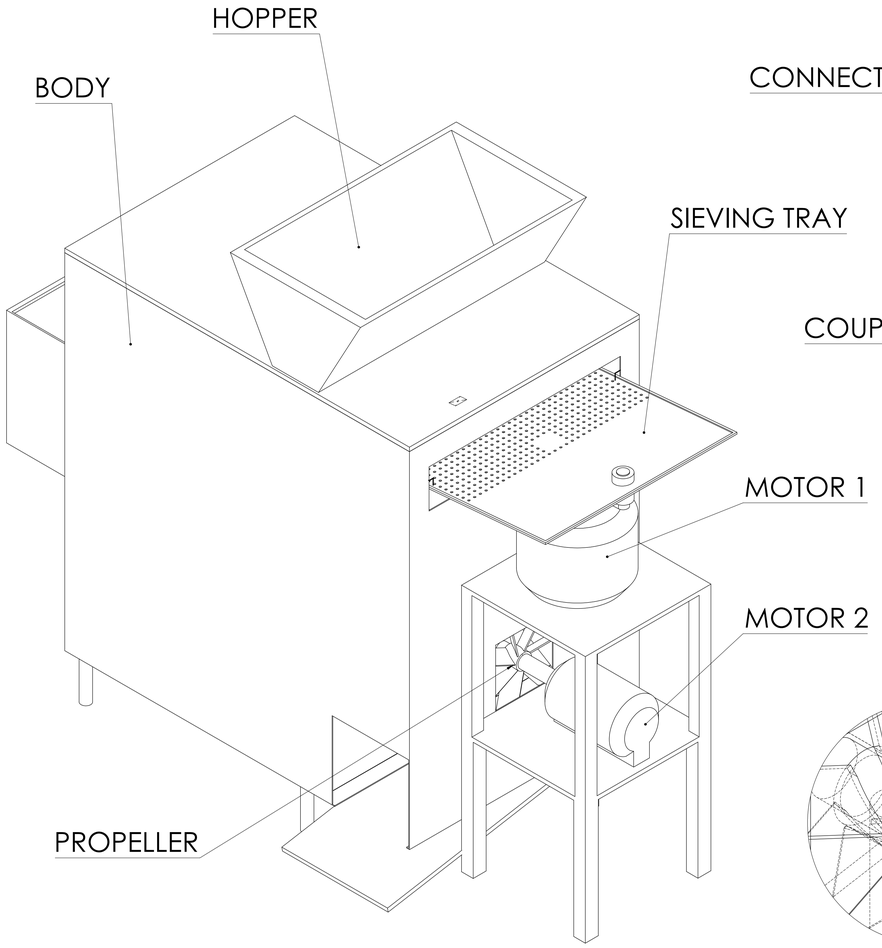

ARRANGEMENT DIAGRAM

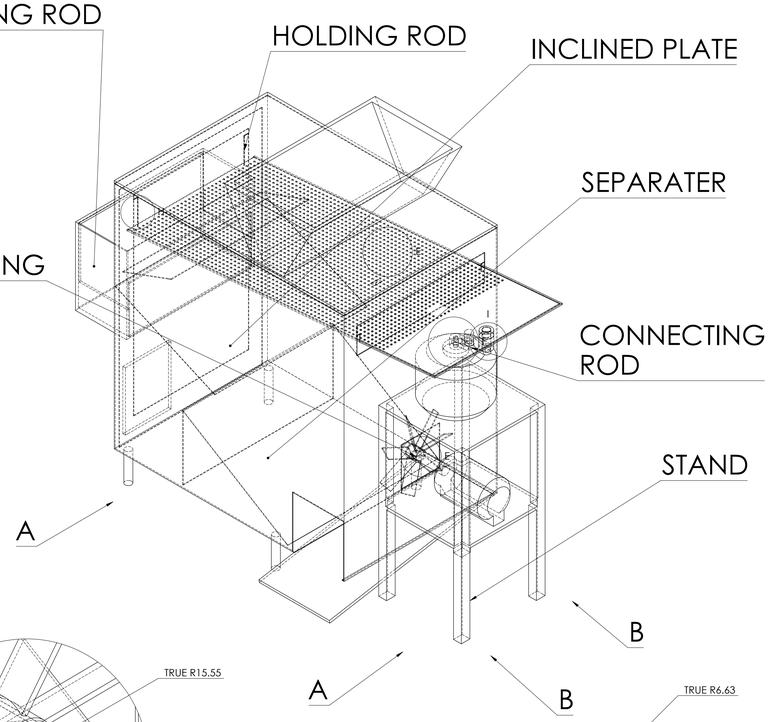

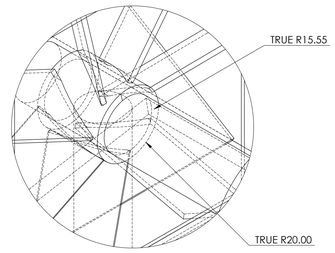

DETAIL - G

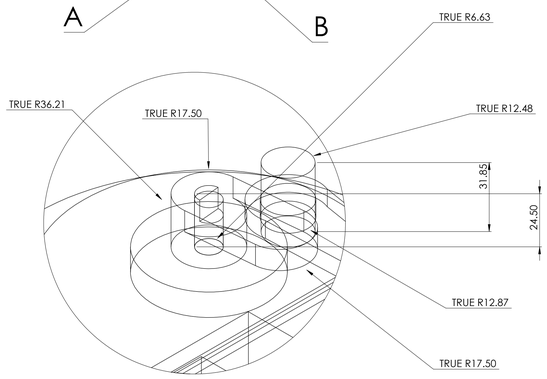

DETAIL - F

BILL OF COMPONENTS

ITEM	PART NAME	MOC	QUANTITY
1	MOTOR	ALUMINIUM	1
2	MS PIPE	MILD STEEL	12 METER
3	ALUMINIUM SHEET	ALUMINIUM	4 METER
4	PROPELLER	ALUMIMIUM	1
5	ALUMINIUM PIPE	ALUMIMIUM	3 METER
6	CONNECTING ROD	MILD STEEL	1
7	SIEVING SCREEN	ALUMINIUM	1 METER
8	HOLDING ROD	MILD STEEL	2
9	COIUPLING	ALUMINIUM	2
10	COLLECTING BIN	ALUMINIUM	1

BUDGET

S.NO	ITEM DESCRIPTION	QUANTITY	UNIT COST	PROPOSED COST
1	MOTOR	2	2000	4000
2	MS PIPE	12 METER	90	1080
3	ALUMINIUM SHEET	4 METER	1400	1400
4	PROPELLER	1	250	250
5	ALUMMINIUM PIPE	3 METER	350	1050
6	CONNECTING ROD	1	100	100
7	SIEVING SCREEN	1 METER	2500	2500
8	SPEED CONTROLLER	1	600	1200
9	COUPLING	2	100	200
10	FABRICATION COST	-	1000	1000
	TOTAL COST	-	-	13280

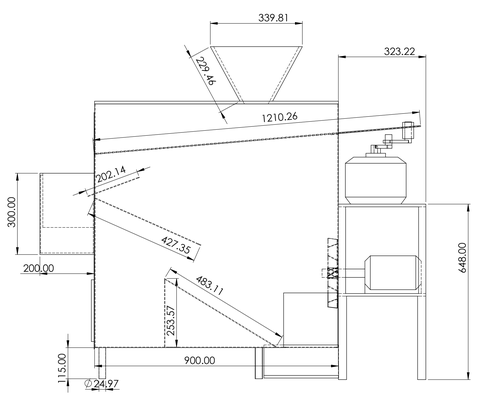

VIEW - AA

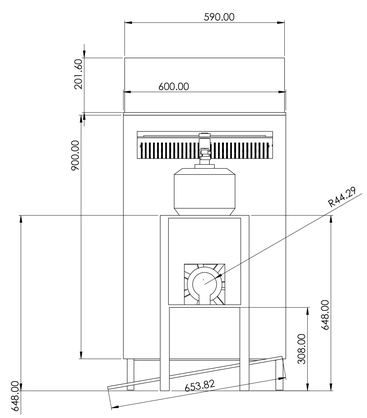

VIEW - BB

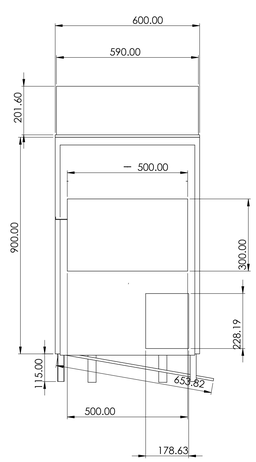

VIEW - CC

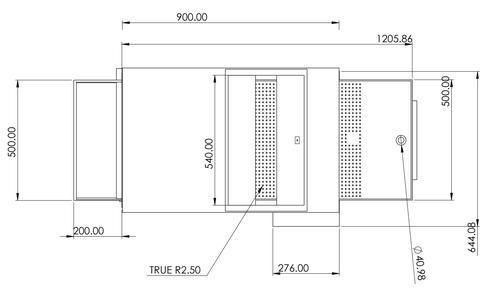

PLAIN VIEW

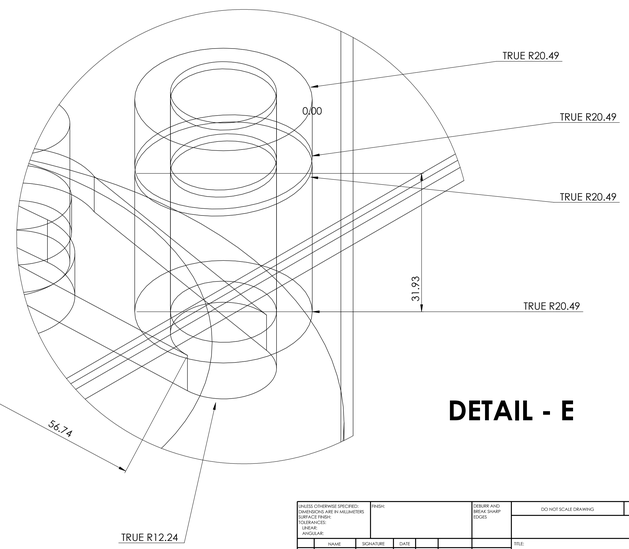

DETAIL - E

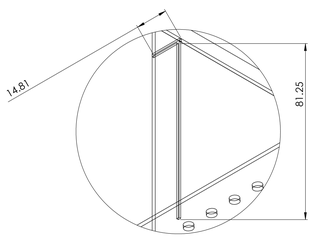

DETAIL - I

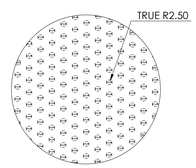

DETAIL - H

UNLESS OTHERWISE SPECIFIED: DIMENSIONS ARE IN MILLIMETERS SURFACE FINISH: TOLERANCES: LINEAR: ANGULAR:	FINISH:	DRAWN AND DESIGN SHARD FOLDER	DO NOT SCALE DRAWING	REVISION:
NAME / SIGNATURE / DATE			TITLE:	
DRAWN:				
CHK'D:				
APP'D:				
MFG:				
Q.A:	MATERIAL:		DWG NO. SIMULATION	A0
	WEIGHT:		SCALE:1:5	SHEET 1 OF 1