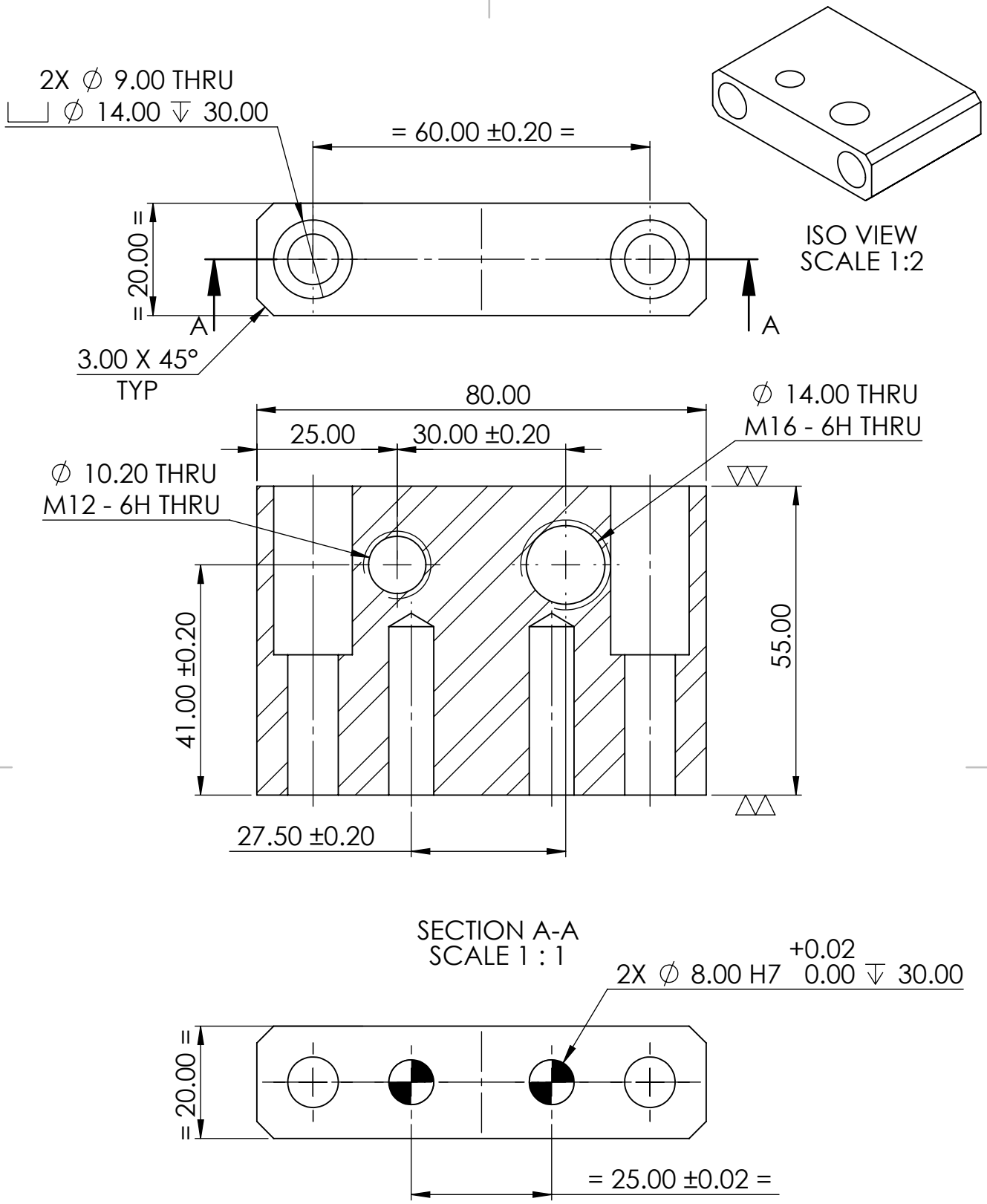

UNLESS OTHERWISE SPECIFIED: DIMENSIONS ARE IN MILLIMETERS SURFACE FINISH: TOLERANCES: LINEAR: ANGULAR:	FINISH:	DEBURR AND BREAK SHARP EDGES	DO NOT SCALE DRAWING / REVISION

4DIMENSIONS INFOTECH

	NAME	SIGNATURE	DATE
DRAWN			
CHK'D			
APPV'D			
MFG			
Q.A			

TITLE: SENSOR MOUNTING

MATERIAL: M.S.

WEIGHT:

DWG NO. 4DI2324_056_A01_01_P12

A4

SCALE: NA

SHEET 1 OF 1