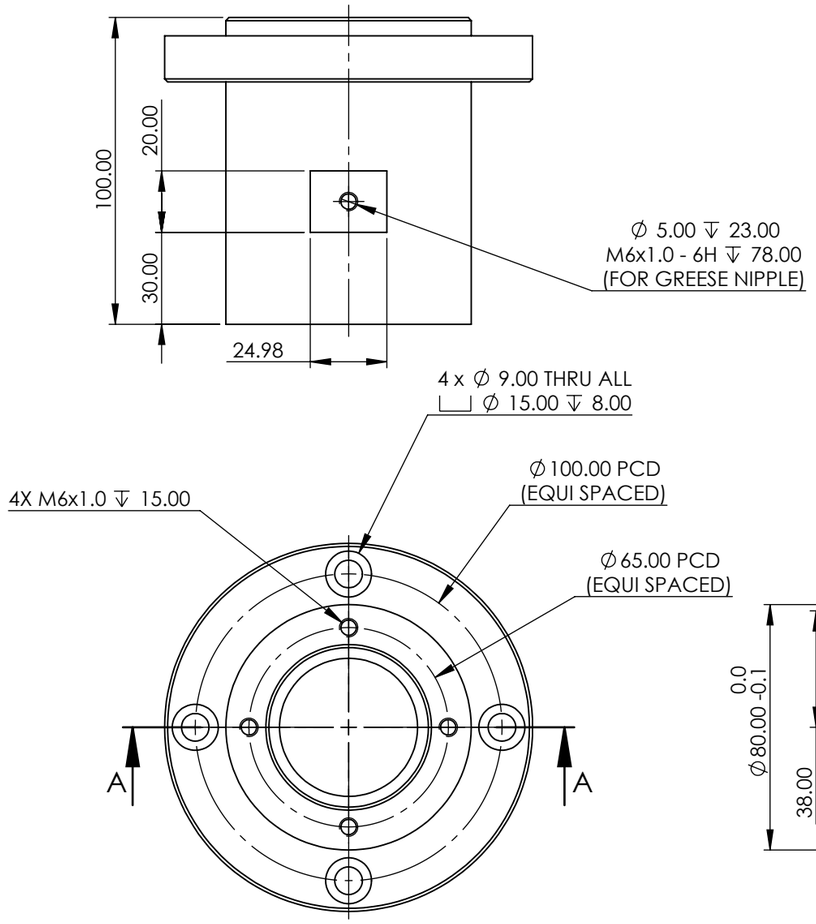

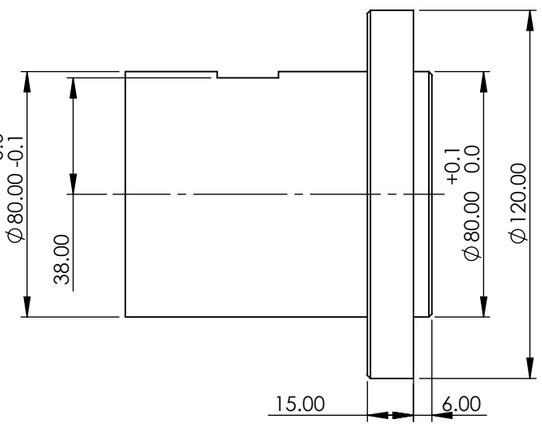

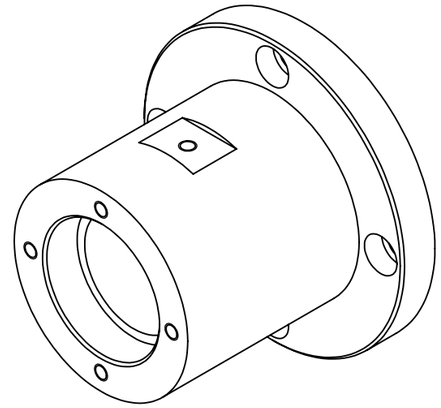

ISO VIEW
SCALE 1:2

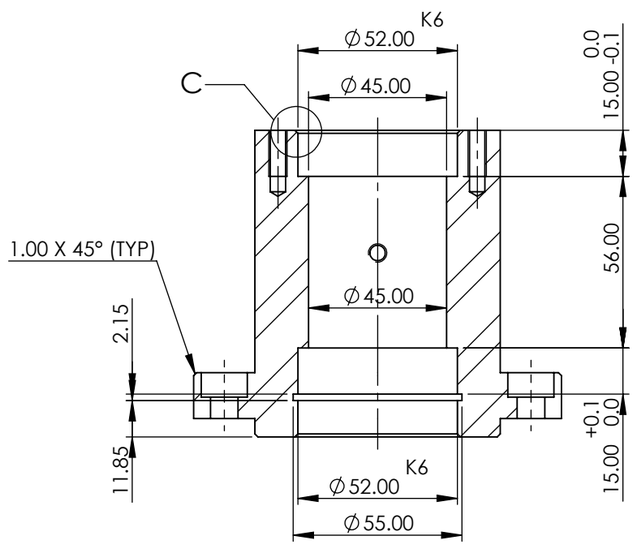

SECTION A-A

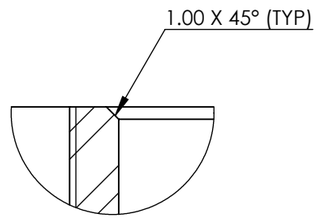

DETAIL C
SCALE 2 : 1

UNLESS OTHERWISE SPECIFIED: DIMENSIONS ARE IN MILLIMETERS SURFACE FINISH: TOLERANCES: LINEAR: ANGULAR:	FINISH:		DEBURR AND BREAK SHARP EDGES	DO NOT SCALE DRAWING		REVISION
	NAME	SIGNATURE	DATE	4DIMENSIONS INFOTECH		
DRAWN				TITLE: BEARING HUB		
CHK'D						
APPV'D						
MFG						
Q.A				MATERIAL: M.S.	DWG NO. BEARING HUB	A3
				WEIGHT:	SCALE: NA	SHEET 1 OF 1