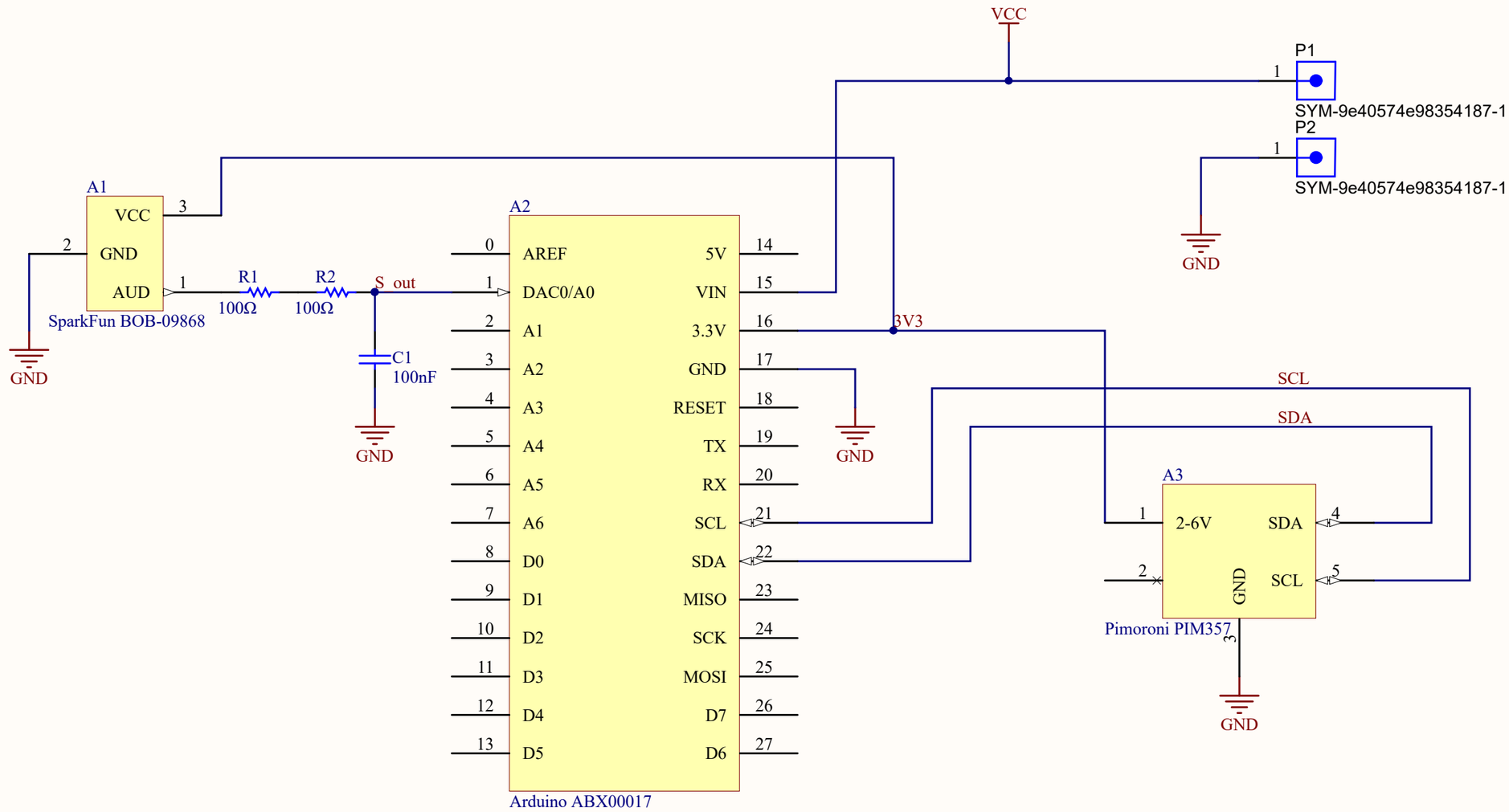

Title	MKR WAN 1300 sound, temp, humidity, pressure, and gas measurement system		
Size A	Number		Revision
Date:	3/15/2021	Sheet of	
File:	MKRWAN_1300.SchDoc	Drawn By:	Viktor Todorov