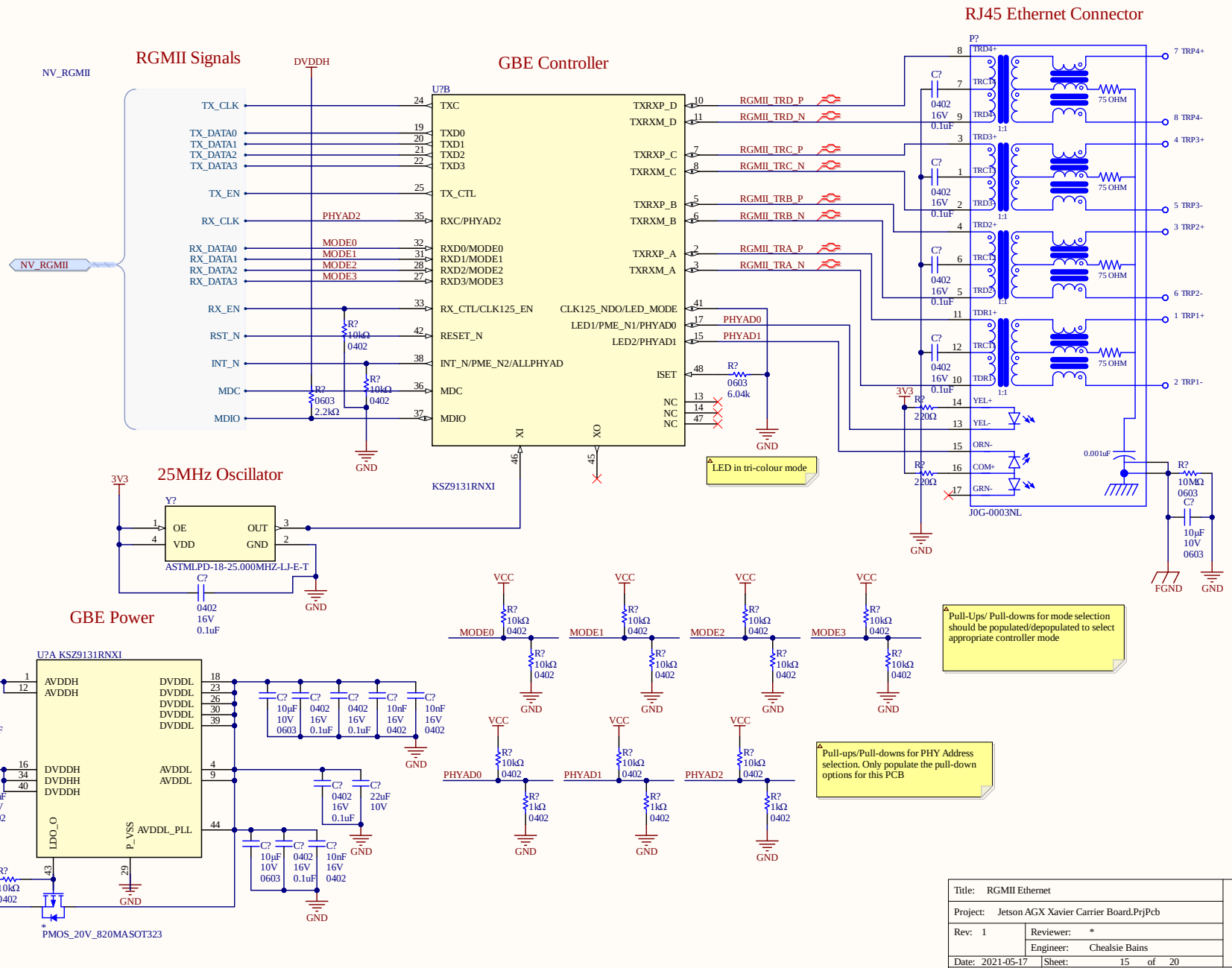

Title:	RGMII Ethernet
Project:	Jetson AGX Xavier Carrier Board.PrjPcb
Rev: 1	Reviewer: *
	Engineer: Chealsie Bains
Date: 2021-05-17	Sheet: 15 of 20

UW ROBOTICS TEAM