M-Key Connector

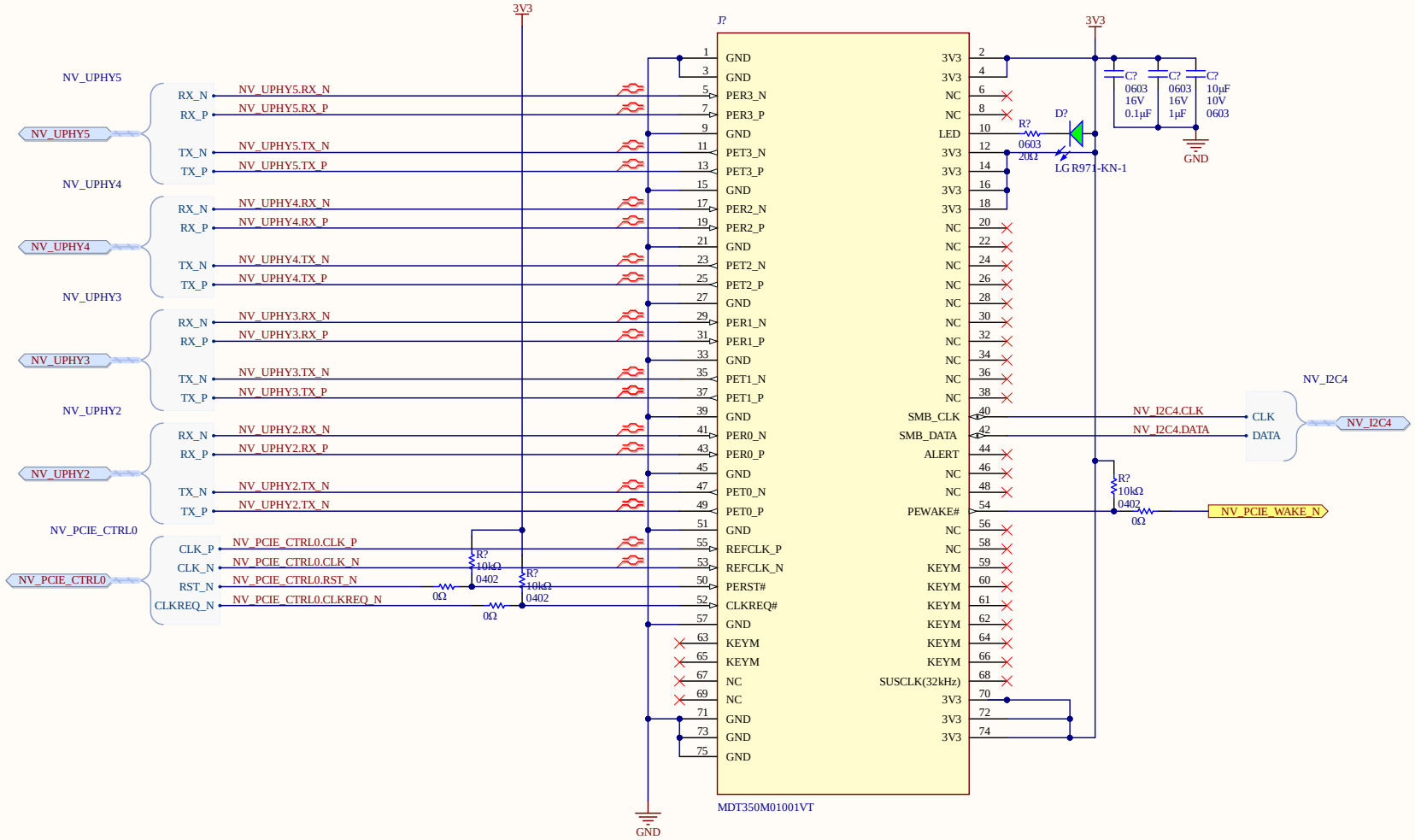

Title: M.2 M-Key	
Project: Jetson AGX Xavier Carrier Board.PrjPcb	
Rev: 1	Reviewer: *
	Engineer: Chealsie Bains
Date: 2021-05-18	Sheet: 17 of 20

UW ROBOTICS TEAM