MODULE 2

Solar Power Plants

Measurement of Solar Radiation: Pyrometer, shading ring pyrheliometer, sunshine recorder, schematic diagrams and principle of working. Solar Thermal Conversion: Collection and storage, thermal collection devices.

Fundamentals of solar energy and photovoltaic (PV) technology: Types of solar power plants: grid-tied, off-grid, and hybrid systems, Design considerations for solar power plants: site selection, orientation, and shading analysis, PV system components and their functionalities, Operation, maintenance, and performance monitoring of solar power plants.

MEASUREMENT OF SOLAR RADIATION:

Measurements of solar radiation are important because of the increasing number of solar heating and cooling applications and need for accurate solar irradiation data to predict performance.

Experimental determination of the energy transferred to a surface by solar radiation required instruments which will measure the heating effect of direct solar radiation and diffuse solar radiation.

Solar radiation data are measured mainly by following instruments:

1. **Pyranometer:** A pyranometer is designed to measure global radiation, usually on a horizontal surface but can also be used on an inclined surface. When shaded from beam radiation by using a shading ring, it measures diffuse radiation only.

2. **Pyrheliometer:** An instrument that measures beam or direct radiation by using a long and narrow tube to collect only beam radiation from the sun at normal incidence.

3. **Sunshine recorder:** An instrument that measures the sunshine hours in a day.

1. Pyranometer:

A pyranometer is an instrument which measures total or global radiation over a hemispherical field of view.

A precision pyranometer is designed to respond to radiation of all wavelengths and hence measures accurately the total power in the incident spectrum.

It contains a thermopile whose sensitive surface consists of circular, blackened, hot junctions, exposed to the sun and cold junctions are completely shaded.

In most pyranometers, the sun's radiation is allowed to fall on a black surface to which the hot junctions of a thermopile are attached.

The cold junctions of the thermopile are located in such a way that they do not receive the radiation.

As a result, an e.m.f. proportional to the solar radiation is generated.

This e.m.f. which is usually in the range of 0 to 10 mV can be read, recorded or integrated over a period with regular calibration of about ± 2 percent can be obtained.

Thermopile works on the principle of the thermoelectric effect, which is the direct conversion of temperature differences to electric voltage and vice versa.

The temperature difference between the hot and cold junctions is the function of radiation falling

on the sensitive surface.
The sensing element is covered by two concentric hemispherical glass domes to shield it from wind and rain. This also reduces the convection currents.
A radiation shield surrounding the outer dome and coplanar with the sensing element, prevents direct solar radiation from heating the base of the instrument.
The instrument has a voltage output of approximately 9 $\mu V/W/m^2$ and has an output impedance of 650 W.

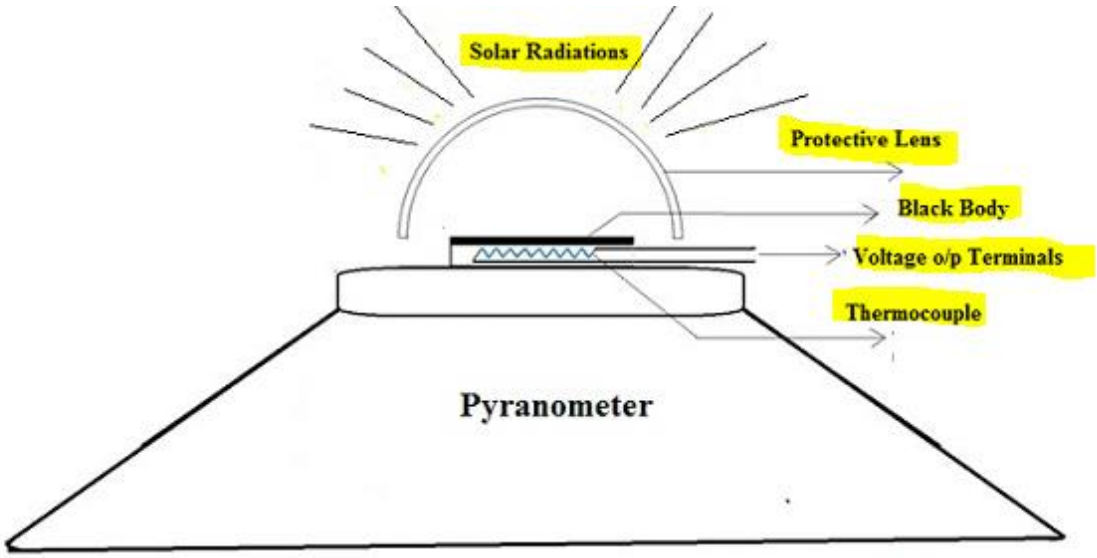

Fig 2.1: Pyranometer

2. Pyrheliometer:

A pyrheliometer is an instrument which measures beam radiation.
In contrast to a pyranometer, the sensor disc is located at the base of a tube whose axis is aligned with the direction of the sun's rays.
Thus, diffuse radiation is essentially blocked from the sensor surface.
Problems with pyrheliometer measurements are several fold: the aperture angle, the circum solar contributions and imprecision in the tracking mechanism.
The first two problems are almost impossible to eliminate because of the inability to define the solar disk precisely and the finite dimensions of the instrument components.
The direct solar component on a horizontal surface may also be obtained using a shading ring, this is done by subtracting the shaded (diffuse) from the unshaded (global) reading.
To measure the direct solar radiation, the receiving surface must be normal to direct solar rays, i.e., a line joining the sun and receiver.

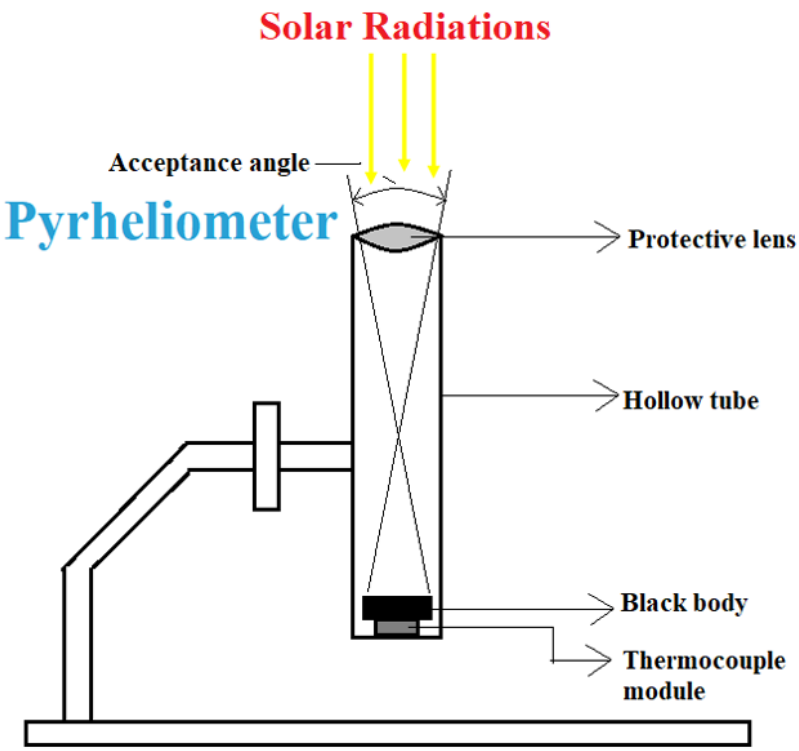

Fig 2.2: Pyrheliometer

3. Sunshine Recorder:

It measures the duration of bright sunshine during the day (in hours).
It consists of a glass sphere (about 10cm in diameter)2.5mounted on its axis parallel to that of earth, within a spherical section (bowl).
The bowl and glass sphere are arranged in such a way that sun's rays are focused sharply at a spot on a card held in a groove in the bowl.
The card is prepared from special paper bearing a time scale.
As the sun moves, the focused bright sunshine burns a path along this paper.
The length of the trace thus obtained on the paper is the measure of the duration of the bright sunshine.

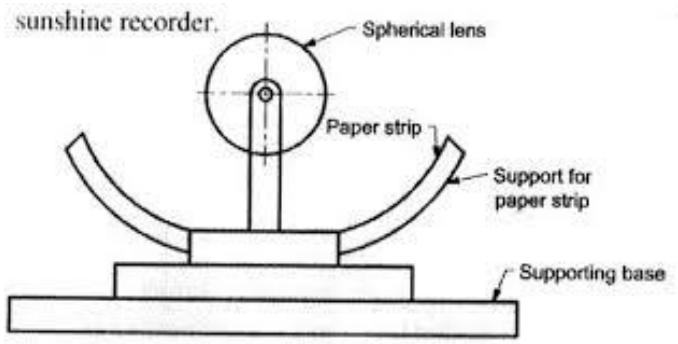

Fig 2.3: Sunshine Recorder

SOLAR THERMAL CONVERSION:

Principle:

The fundamental process used for heat conversion is the greenhouse effect.

Green houses - to grow exotic plants in cold climates through better utilization of the available sunlight.

Most of the energy we receive from the sun comes in the form of light, a shortwave radiation, not all of which is visible to the human eye.

When this radiation strikes a solid or liquid, it is absorbed and transformed into heat energy; the material becomes warm and stores the heat, conducts it to surrounding materials (air water, other solids or liquids) or reradiates it to other materials of lower temperature. This re-radiation is a long wave radiation.

Figure shows how temperature on earth is affected by the green house effect.

For example, visible sunlight absorbed on the ground at a temperature of 20 degrees, emits infra-red light at a wavelength of about 10μm, but CO_2 in the atmosphere absorbs light of that wavelength and back radiates part of it to earth.

Greenhouse effect brings an accumulation of energy on the ground.

Glass easily transmits short-wave radiation, but it is a very poor transmitter of long- wave radiation.

Once the sun's energy has passed through the glass windows and has been absorbed by some material inside, the heat will not be reradiated back outside.

Glass, therefore, act as a heat trap, a phenomenon used in the construction of greenhouses.

Solar collectors for home heating usually called flat plate collectors, almost have one or more glass covers, although various plastic and other transparent materials are often used instead of glass.

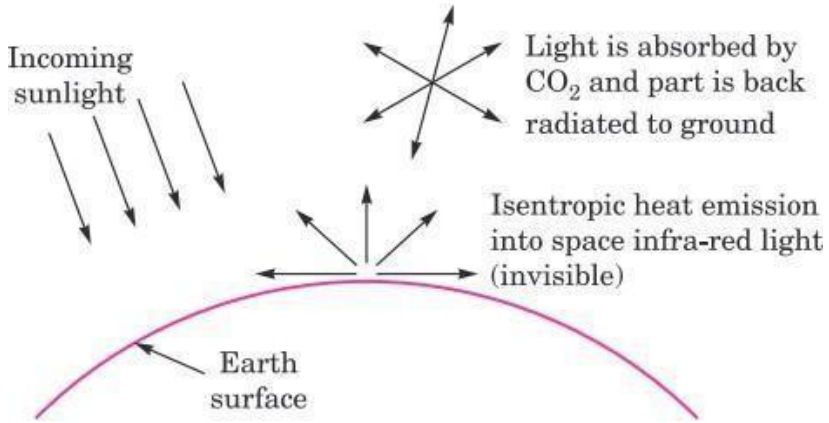

Fig 2.4: The Greenhouse effect radiated to the CO_2 content of the atmosphere

In below figure a black-painted plate absorbs the incoming sunlight.
Above it, is fixed a plate of ordinary window glass.
When the temperature of the black plate increases, it emits an increment of thermal heat in the form of infra- red light.
The black absorber has the properties of a black body; ideal black bodies have not only the highest absorption rate but also the highest emission coefficient for all wavelengths of light.
Emission increases with temperature, following T^4 law.
The reemitted light will have progressively shorter wavelength and greater energy as the temperature of the blackbody increases.
This is expressed by Wien's law, written as:

$$\lambda_{max} \cdot T = \text{constant} = 2989\ \mu\text{m Kelvin}$$

T is the surface temperature of the blackbody and λ is the wavelength

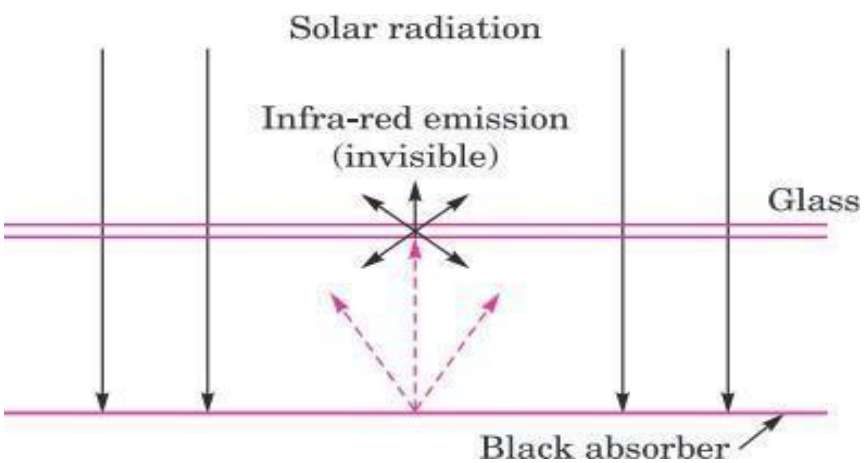

Fig 2.5: Principle of greenhouse effect

SOLAR COLLECTORS:
Solar power has low density per unit area (1 kW/sq. m. to 0.1 kW/sq. m.).
Hence it is to be collected by covering large ground area by solar thermal collectors.
Solar thermal collectors form the first unit in a solar thermal system.
It absorbs solar energy as heat and then transfers it to heat transport fluid efficiently.
The heat transport fluid delivers this heat to thermal storage tank / boiler / heat exchanger, etc., to be utilized in the subsequent stages of the system.

Classification of Solar Collectors:

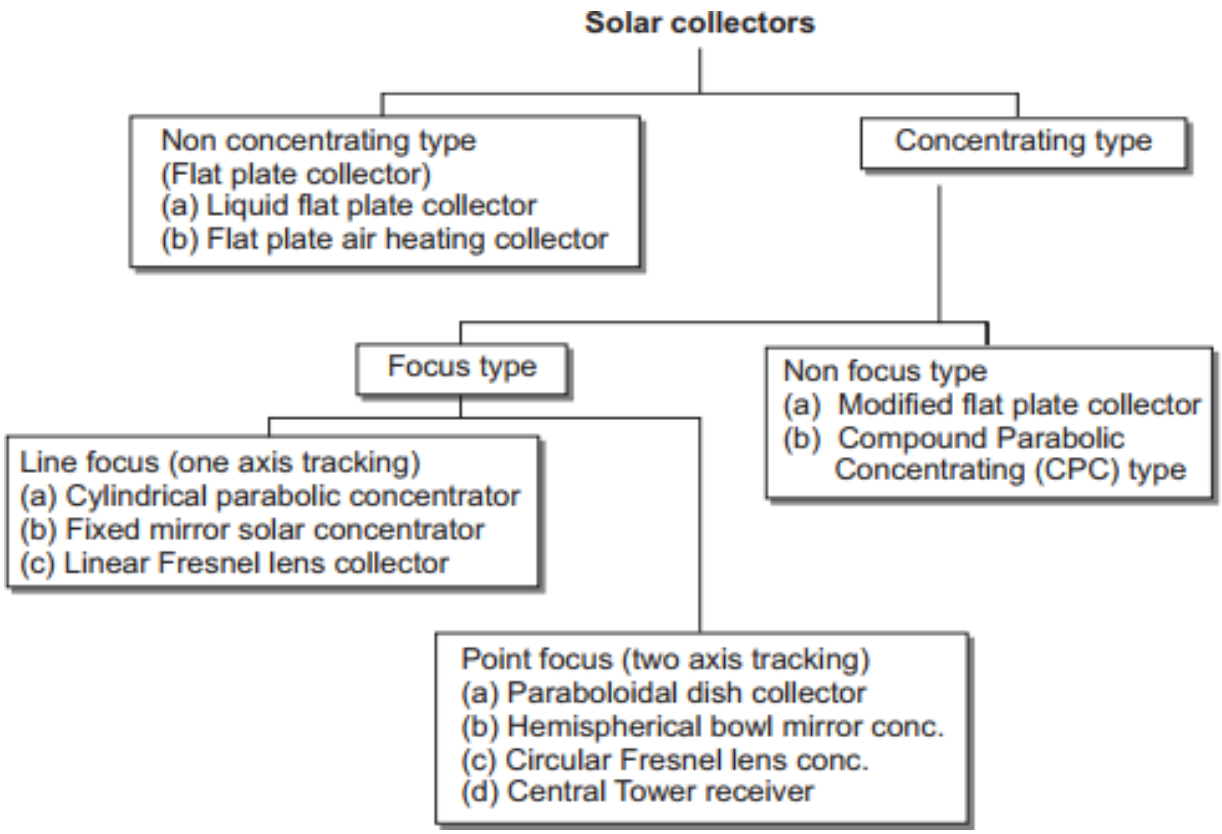

Fig 2.6: Classification of Solar Collectors

I. Non-concentrating type solar collectors:

Non-concentrating (flat plate) collectors absorb both beam as well as diffuse radiation, which is a distinct advantage of flat plate collectors.

When temperatures below about 90°C are adequate (for space and service water heating), flat plate collectors (non-concentrating type) are convenient.

They are made in rectangular panels, about 1.7 to 2.9 sq. m. in area, and are relatively simple to construct and erect.

Flat plates can collect and absorb both direct and diffuse solar radiation, hence they are partially effective even on cloudy days.

II. Concentrating type solar collectors:

Solar radiation is converged from large area into smaller area using optical means.

Beam radiation, which has a unique direction and travels in a straight line, can be converged by reflection or refraction techniques.

Diffuse radiation, however, has no unique direction and so does not obey optical principles. Therefore, diffuse component cannot be concentrated.

Thus, concentrating type solar collectors mainly make use of beam radiation component.

I. Classification of Non-concentrating or Flat Plate Collector:

Flat-plate solar collectors are divided into two main classifications based on the type of heat transfer fluid used.

The principal difference between the two types is the design of the passages for the heat for the transfer fluid.

(1) Liquid heating collectors are used for heating water and non-freezing aqueous solutions and occasionally for non-aqueous heat transfer fluids.

(2) Air or gas heating collectors are employed as solar air heaters.

Components of Flat Plate Collector:

A **transparent cover** which may be one or more sheets of glass or radiation transmitting plastic film or sheet.

Tubes, fins, passages or channels are integral with the collector absorber plate or connected to it, which carries the water, air or other fluid.

The **absorber plate**, normally metallic or with a black surface, although a wide variety of other materials can be used with air heaters.

Insulation, which should be provided at the back and sides to minimize the heat losses. Standard insulating materials such as fiber glass or styro-foam are used for this purpose.

The **casing or container** which enclose the other components and protects them from the weather.

(1) Liquid Flat Plate Collector:

It is the plate and tube type collector.

It consists of a flat surface called as absorber plate with high absorptivity for solar radiation.

The absorber plate is a metal sheet (copper, steel, aluminium) 1 to 2 mm thick.

Copper tubes with diameter ranging from 1 to 1.5 cm are in thermal contact with the plates.

They are soldered, brazed or clamped to the bottom (in some cases, to the top) of the absorber plate with the pitch ranging from 5 to 15 cm.

In some designs, the tubes are also in line and integral with the absorber plate

Thermal insulation of 5 to 10 cm thickness is placed behind the absorber plate to prevent the heat loss from the rear surface.

Insulation materials is generally mineral wool or glass wool or fiberglass.

The front covers are generally glass (one or more layers) that is transparent to incoming solar radiation and opaque to the infra-red reradiation from the absorber.

As a result, heat remains trapped in the airspace between the absorber plate and glass cover in a manner like green house.

The glass cover also prevents heat loss due to convection by keeping the air stagnant.

Glass is generally used for the transparent covers, but certain plastic films may be satisfactory; Thickness of glass is usually 3 and 4 mm.

The usual practice is to have 1 or 2 covers with a thickness ranging from 1.5 to 3 cm.

The surface finish of the absorber plate may be a flat black paint with an appropriate primer.

Black painted absorbers are preferred because they are considerably cheaper.

The coatings applied on absorber plate are called selective coatings (black chrome – Chromium sesquioxide) which reduces the amount of energy emitted by thermal infra-red radiation.

Typical collector dimensions are 2 m x 1 mx 15 cm.

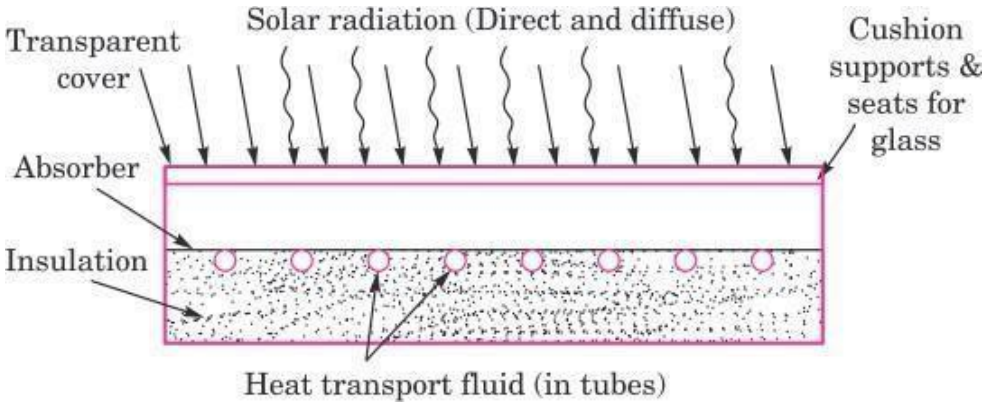

Fig 2.7: Liquid Flat plate collector

Heat Transport System:
Heat is transferred from the absorber plate to a point of use by circulation of fluid (water) through tubes across the solar heated surface.
The tubes are connected to common headers at each end of the collector.
Header pipes of slightly larger diameter, typically 2 to 2.5 cm, lead the water in and out of the collector and distributed to tubes.
To maximise the exposure to solar radiation, collectors are almost invariably sloped.
Cooler water then enters at the bottom header, flows upward through the tubes where it is warmed by the absorber, and leaves by way of the top header.
Mixture of water and ethylene glycol (antifreeze mixture) are also used if the ambient temperatures are likely to drop below 0°C during nights.
Corrosion can be minimized by using copper tubing; Aluminium is a less expensive alternative; periodic chemical treatment of water is desirable, leaks in water circulation system require immediate attention.

(2) Air or Gas Collector or Solar Air heater:
The air stream is heated by the back side of the collector plate.
Fins attached to the plate increase the contact surface.
The back side of the collector is heavily insulated with mineral wool or some other material.Orientation of a collector for heating - facing due south at an inclination angle to the horizontal equal to the latitude plus 15°.

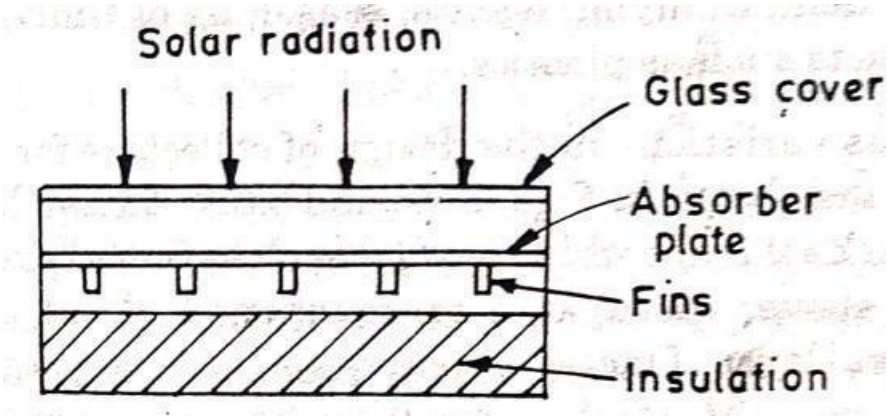

Fig 2.8 : Air Collector

To decrease the power required to pump the necessary volume of air through the tubes, wider flow channels are used.
Example - air is passed through a space between the absorber plate and insulator with baffles arranged to provide a long (zig-zag) flow path.

II. Classification of Concentrating type collector:

1. Focusing collector
(i) Line focus type (One axis tracking) - line is a collector pipe through which the heat transport fluid flows
(a) Parabolic trough collector
(b) Mirror strip solar collector
(c) Fresnel lens collector
(ii) Point focus type (Two axis tracking) - point is a small volume through which the heat transport fluid flows
(a) Paraboloidal dish collector
(b) Hemispherical bowl mirror concentrator
(c) Circular Fresnel lens concentrator
(d) Central Tower Receiver
2. Non-focusing collector
(a) Modified Flat plate collector or Flat plate collector with adjustable mirrors
(b) Compound Parabolic Concentrator (CPC)

1. Focusing collector:
Focusing collector is a device to collect solar energy with high intensity of solar radiation on the energy absorbing surface.
It uses optical system in the form of reflectors or refractors.
It is a special form of flat-plate collector modified by introducing a reflecting (or refracting) surface (concentrator) between the solar radiations and the absorber.

It can have radiation increase from low value of 1.5 to 2 to high values of the order of 10,000.
In these collectors radiation falling on a relatively large area is focused on to a receiver (or absorber) of considerably smaller area.
As a result of the energy concentration, fluids can be heated to temperatures 500°C or more.
It concentrates only on direct radiation coming from a specific direction, since diffuse radiation arrives from all directions, only a very small proportion is from the direction for which focusing occurs.
The optical system directs the solar radiation on-to an absorber of smaller area which is usually surrounded by a transparent cover.
Because of the optical system, reflection or absorption losses in the mirrors or lenses and losses due to geometrical imperfections in the optical system occurs.
collection efficiency is usually higher.

(i) Line focussing collector

(a) Parabolic trough collector:

It is a reflection type of focusing collector.
concentrators are used, in which absorber is placed along focus axis.
The collector pipe with a selective absorber coating, is used as an absorber.
Dimension: length of a reflector unit - 3 to 5 m; width - 1.5 to 2.4 m.
Ten or more such units are often connected end to end in a row, several rows may also be connected in parallel.
Parabolic trough reflectors - made of highly polished aluminium, silvered glass or a thin film of aluminized plastic on a firm base.
Instead of having a continuous form, the reflector may be constructed from a number of long flat strips on a parabolic base.
For the solar radiation to be brought to a focus by parabolic trough reflector, the sun must be in such a direction that it lies on the plane passing through the focal line and the vertex (i.e., the base) of the parabola.
Since the elevation of the sun is always changing, either the reflector trough or the collector pipe (absorber) must be turned continuously about its long axis to maintain the required orientation. Both schemes are used in different practical designs.
Either the trough/cylindrical reflector or the pipe is turned by partial rotation around a single axis parallel to the trough length.
Trough type collectors are generally oriented in the east-west or north-south directions.
For the east-west orientation, the collectors are laid flat on (or parallel to) the ground.
For the north-south orientation, the north end of the trough is raised so that the collectors are sloped facing south-just like flat-plate collectors.
slope angle should be changed periodically; it is simpler but less efficient to use a fixed angle design.
The increased separation distance between rows of collectors also results in increased pipeline costs and greater pumping and thermal losses.
Finally, the sun set position of an east-west reflector is essentially the same as the sunrise position, and little or no overnight adjustment is required.
For the north- south orientation, however the trough (or receiver) must be turned through a large angle from sunset to sunrise.

The choice of orientation in any instance depends on the foregoing and other considerations

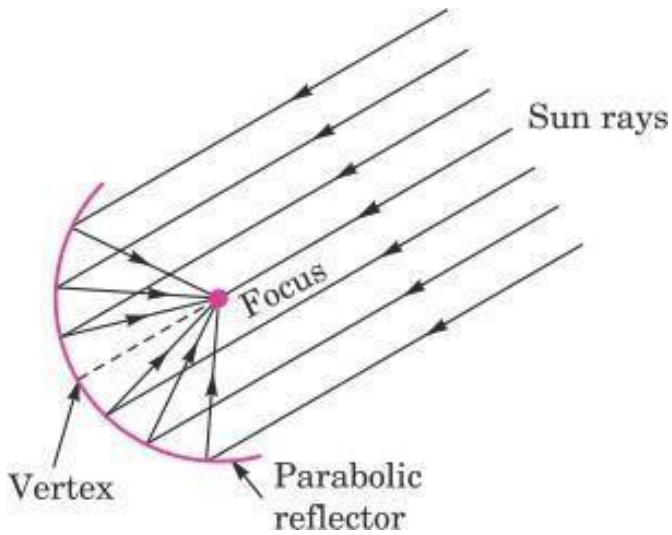

Fig 2.9: Cross-section of Parabolic trough collector

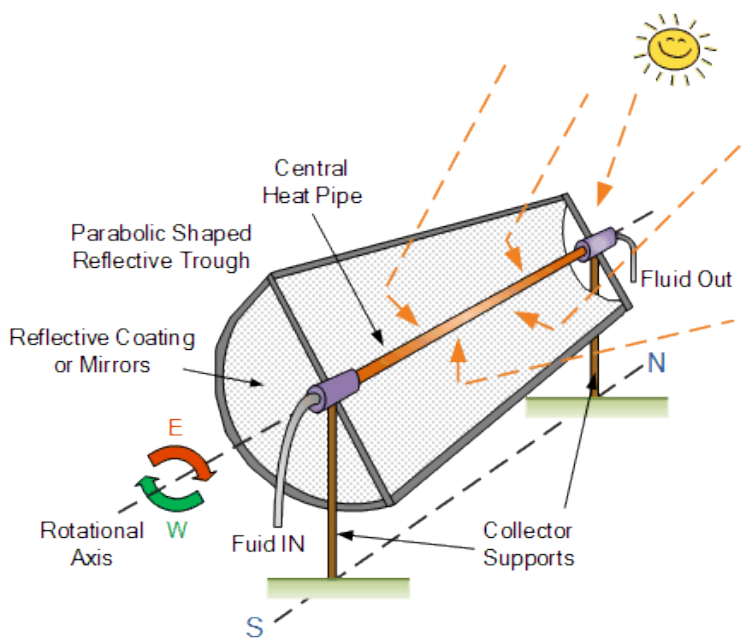

Fig 2.10: Cylindrical parabolic system

(b) Mirror strip solar collector:

Due to practical difficulty in manufacturing a large mirror in a single piece, several plane or slightly curved (concave) mirror strips are mounted on a flat base -

The angles of the individual mirrors are such that they reflect solar radiation from a specific

direction on to the same focal line .
The angles of the mirrors must be adjusted to allow for changes in the sun's elevation, while the focal line (for collector pipe) remains in a fixed position.
The mirror strips may be fixed and the collector pipe moved continuously to remain on the focal line (rotate about the center of curvature of reflector module to track the sun).

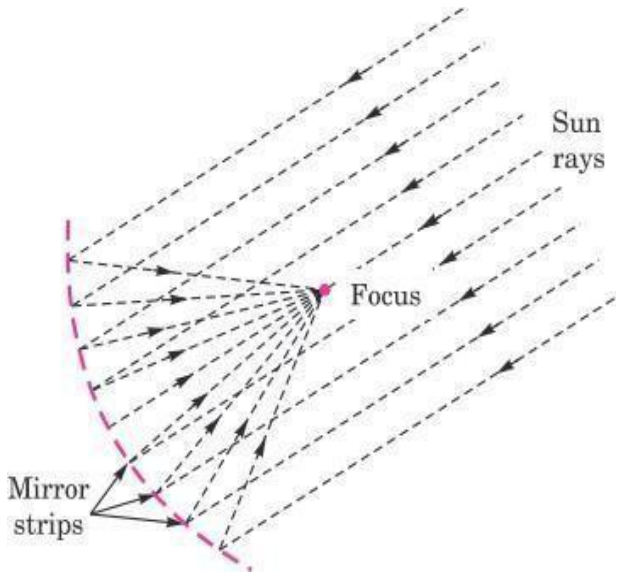

Fig 2.11: Mirror strip solar collector

(c) Fresnel lens collector:
It is a refraction type of focusing collectors.
It utilizes the focusing effect of a Fresnel lens as represented in Fig.
For a trough-type collector, the lens is rectangle - 4.7 m overall length, 0.95 m in width.
It is made in sections from cost acrylic plastic and can be produced in quantity at low cost.
The rounded triangular trough serves only as a container and plays no role in concentrating the solar energy.
To be fully effective, the Fresnel lens must be continuously aligned with the sun in two directions - both along and perpendicular to its length.
Concentration ratio of 10 to 30 obtained which yields temperatures between 150 to 300 °C.

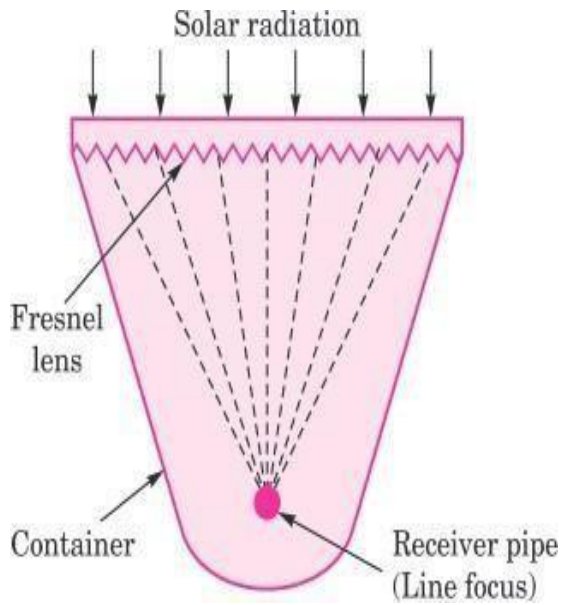

Fig 2.12: Fresnel lens collector Receiver pipe for Fresnel lens

Receiver pipe for Fresnel lens collector:

- Solar radiation is focused into the absorber from the top (unlike from bottom in the parabolic type).
- Insulation at the bottom and sides of the absorber pipe and a flat plate over the top reduce thermal losses.
- A stainless-steel reflector adjacent to the pipe reflects back emitted thermal radiation.

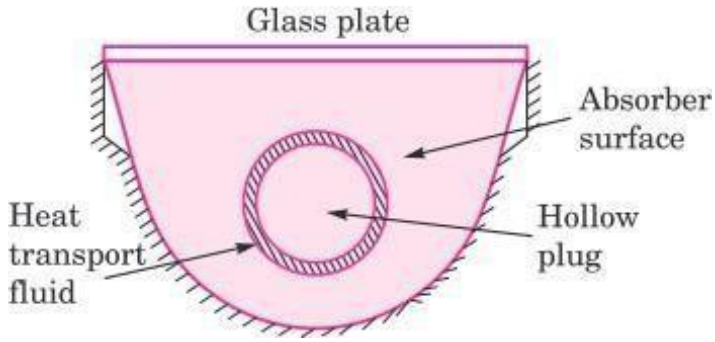

Fig 2.13: Receiver for Fresnel lens collector

(ii) Point Focusing Collector

(a) Paraboloidal dish collector:

A paraboloidal dish collector brings solar radiation to a focus at a point (a small central volume).
Beam radiation is focused at a point in the paraboloid; This requires two-axis tracking.
A dish 6.6 m in diameter has been made from about 200 curved mirror segments forming a paraboloidal surface.
The absorber, located at the focus, is a cavity made of a zirconium-copper alloy with a black chrome selective coating.

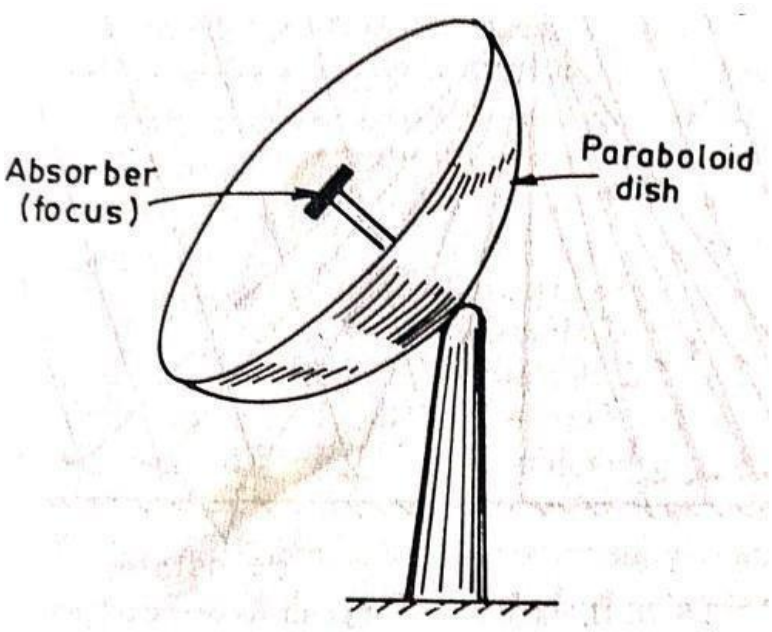

Fig 2.14: Paraboloidal dish collector

The heat-transport fluid flows into and out of the absorber cavity through pipes bonded to the interior.
The dish can be turned automatically about two axes (up-down and left-right).
The concentration ratios (concentration ratio is the ratio of the area of the concentrator aperture to the energy absorbing area of the receiver) are very high in the case of parabolic system and therefore can be used where high temperatures are required.
Concentration ratios of about 30 to 100 or higher would be needed to achieve temperatures in the range 300 to 500°C or higher.

(b) Hemispherical bowl mirror concentrator:

It consists of hemispherical fixed mirror, a tracking absorber and supporting structure as shown in Fig.
All rays entering the hemisphere after reflection cross the paraxial line at some point between the focus and the mirror surface.
Therefore, a linear absorber pivoted about the center of curvature of the hemisphere intercepts all reflected rays.

The absorber is to be moved so that its axis is always aligned with solar rays passing through the centre of the sphere. This requires two-axis tracking.
The absorber is either driven around a polar axis at a constant angular speed of 15 degrees /hour or adjusted periodically during the day.
This type of concentrator gives lesser concentration, owing to spherical aberration, than that obtained in paraboloidal concentrator.

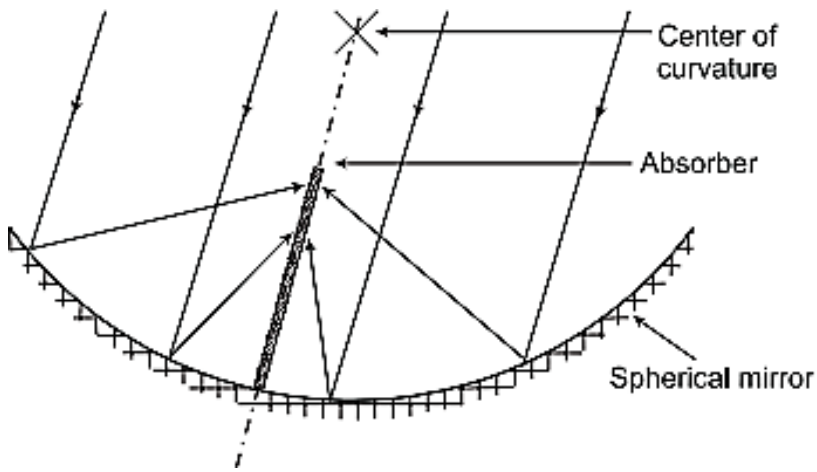

Fig 2.15: Hemispherical bowl mirror concentrator

(c) Circular Fresnel lens concentrator:
These lenses are generally used where high flux is desired, such as with silicon solar cells or with gallium arsenide solar cells as receiver.
Fig. shows the construction of a circular Fresnel lens.
It is divided into number of thin circular zones.
The tilt of each zone is adjusted such that the lens approximates a thin spherical lens.
The concentration ratio is 2000 (high) but is less than that obtained from a paraboloidal reflector.
In solar cell applications, tracking is required to keep the small solar image centered on the receiver.

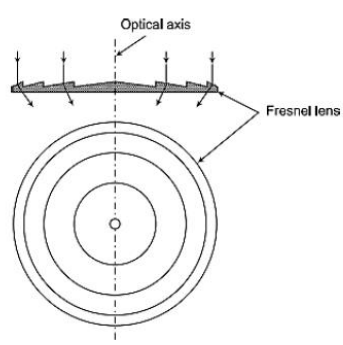

Fig 2.16: Circular Fresnel lens concentrator

(d) Central Tower Receiver Collector:

In the central tower receiver collector, the receiver is located at the top of a tower.

It is equivalent to a very large paraboloidal reflector consisting of a considerable number of mirrors distributed over an area on the ground.

Each mirror, called a heliostat, can be steered independently about two axes so that the reflected solar radiation is always directed towards an absorber mounted on a tower.

Concentration ratio as high as 3000 can be obtained.

The absorbed energy can be extracted from the receiver and delivered at a temperature and pressure suitable for driving turbines for power generation.

This is mostly used in tower power plants for generation of electrical energy.

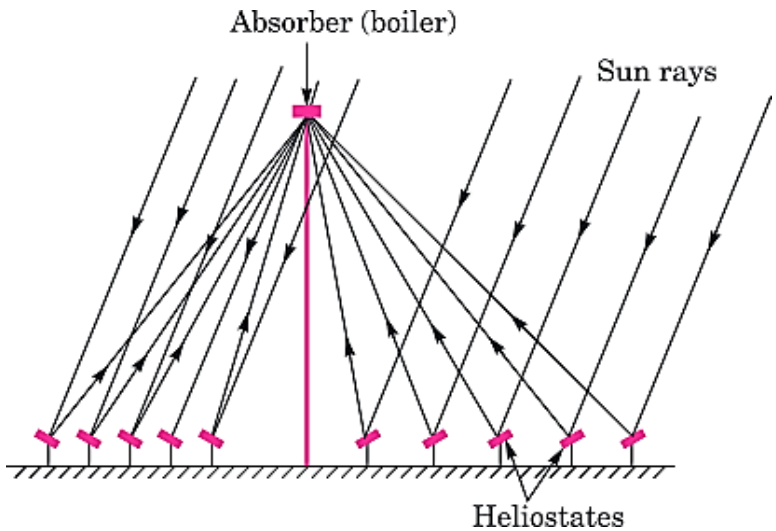

Fig 2.17: Central Tower Receiver Collector

2. Non-focusing collector:

(a) Modified Flat plate collector or Flat plate collector with adjustable mirrors:

By providing plane reflectors at the edges of flat plate collector to reflect additional radiation into the receiver the concentration of solar radiation can be increased.

It consists of a flat plate facing south with mirrors attached to its north and south edges.

These mirrors are also called booster mirrors.

If the mirrors are set at the proper angle, they reflect solar radiation on to the absorber plate.

Thus, the latter receives reflected radiation in addition to that normally falling on it

For the mirrors to be effective, the angles should be adjusted continuously as the sun's altitude changes.

The concentration ratio of these concentrators has a maximum value of 4.

V-trough design is aligned in the East-West direction and requires periodic tilt adjustment.

Different optimum depth-to-base width ratio and cone angles are possible depending on the frequency of seasonal tilt adjustment.

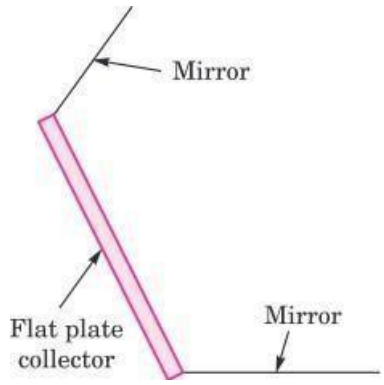

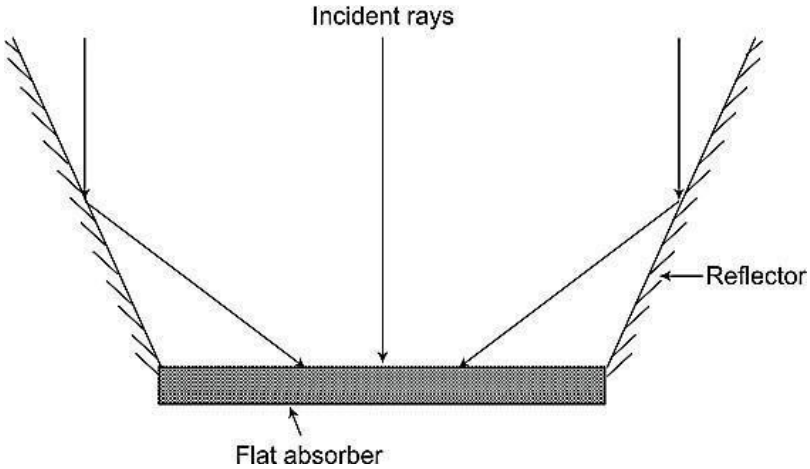

Fig 2.18: Modified Flat plate collector

(b) Compound Parabolic Concentrator (CPC):

It consists of two parabolic mirror segments, attached to a flat receiver.

The segments are oriented such that the focus of one is located at the bottom end point of the other in contact with receiver.

It has a large acceptance angle and needs to be adjusted intermittently.

In addition to collecting both direct and diffuse radiations, an advantage of the CPC is that it provides moderately good concentration (less than a focussing collector) in an east-west direction without (or only seasonal) adjustment for sun tracking.

Rays in the central region of the aperture reach the absorber directly whereas those near the edges undergo one or more reflections before reaching the absorber.

The concentration ratio achieved from this collector is around 10.

CPC reflectors can be designed for any absorber shapes: Flat one-sided absorber, Flat two- sided absorbers (fin), Wedge-like absorbers and Tubular absorbers.

For economic and thermal reasons the fin and the tubular type of absorbers are preferable.

With a concentric tubular absorber with an evacuated jacket, temperatures of about 200°C are

achievable with CPC collectors.
They are suitable for the temperature range of 100-150°C even if the absorber is not surrounded by a vacuum.

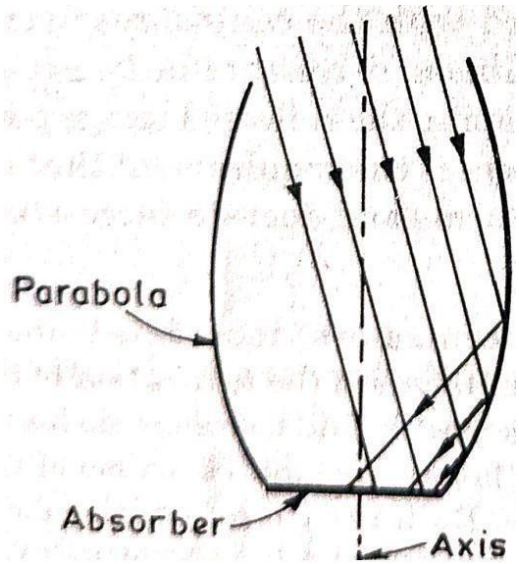

Fig 2.19: Compound Parabolic Concentrator (CPC

Advantages:
(i) There is no need for tracking, as it has high acceptance angle, only seasonal adjustments are required; For concentration ratios of 3, even seasonal adjustments may not be required.
(ii) The efficiency for accepting diffuse radiation is much larger than conventional concentrators.
(iii) Its concentration ratio is equal to the maximum value possible for a given acceptance angle.

SOLAR ENERGY STORAGE:

Need for Energy Storage:
Solar energy is a time dependent and intermittent energy resource.
Energy demands are time dependent (in an entirely different manner from the solar energy supply).
Thus, need for the storage of energy is important, if the solar energy is to meet the energy needs (e.g., low availability of solar energy when it is used for heating in winter).
An optimally designed solar-electric system will collect and convert when the insolation is available during the day.
The problem of clouds with photovoltaic plants, lowers electrical output compared to high insolation cloud-free days.
During such days energy previously stored during high insolation times could be used to provide a continuous electrical output or thermal output.
Storage increases the reliability of delivering power at an arbitrary needed time.

Storage of solar energy in a solar system may:
Permit solar energy to be captured when insolation is highest and later used when the need is greatest.
Make it possible to deliver electrical load power demand during times when insolation is below, normal or non-existent.
Storage also makes it possible to deliver short peaks of power exceeding the rated power capacity of the plant.
Be located close to load, minimizing the need for transmission and distribution facilities.
Improve the reliability of the solar thermal as well as solar electric system.
Permit a better match between the solar energy input and the load demand output than would be the case without storage.

The optimum capacity of an energy storage system depends on the following factors:

- The expected time dependence of solar radiation availability.
- The nature of loads to be expected on the process.
- The degree of reliability needed for the process.
- The way auxiliary energy is supplied.
- The size of the solar thermal power system or solar-electric generator.
- The cost per Kwhr of the stored energy.
- The permissible capital cost allocated to storage.
- Environmental and safety considerations.
- An economic analysis that determines how much of the total usually annual loads should be carried by solar and how much by auxiliary energy sources.

Classification:
Energy storage may be in the form of **sensible heat** of solid/liquid medium, **heat of fusion** in chemical systems or as **chemical energy** of products in the reversible chemical reaction.
Mechanical energy can be converted to **potential energy** and stored in elevated fluids.
The choice of media for energy storage depends on the nature of the process.
For water heating - energy is stored as sensible heat of stored water.
For air heating - storage is sensible or latent heat effects in particular storage units such as sensible heat in a pebble bed heat exchanger.
For photovoltaic or photo chemical processes - storage in the form of chemical energy or energy is stored in the batteries.
Energy stored in different forms - heat, electrical, chemical, mechanical and magnetic.

1. Thermal Storage:
Energy stored by heating, melting or vaporization of material; and the energy becomes available as heat, when the process is reversed.
Storage by causing a material to rise in temperature is called **sensible heat storage**.
Storage by phase change, the transition from solid to liquid or from liquid to vapour is called **latent heat storage.**
Applications of thermal energy storage:
domestic water and space heating applications
thermal power applications
process industries and horticultural

For many domestic applications, water and/or rock storage systems is used.
Water and rock - stores energy as specific heat (sensible heat) - use is limited by their comparatively low specific heats.
Glauber's salt (Na_2, $SO_4.10H_2O$) – stores energy as heat of fusion (latent heat) - stores a given amount of heat within a much smaller volume, least expensive, most readily available salt hydrate.
For high temperature storage in the order of 200 to 300°C - other salts are used and the heat of hydration of inorganic oxides principally MgO and CaO.

(a) Sensible heat storage:
Sensible heat storage involves a material that undergoes no change in phase over the temperature domain encountered in the storage process.
Basic equation for an energy storage unit, operating over a finite temperature difference is:

$$Q_s = (m\ C_p)_s\ (T_1 - T_2)$$

where Qs is the total thermal energy capacity for a cycle operating between temperature limits T1 and T2 with m kg of storage medium of specific heat Cp.
The temperature range is limited at the lower extreme by the requirements of the process, and the upper limit by the process of the vapour pressure of the liquid.
The ability of store thermal energy in a given container of volume V is,

$$\frac{Q_s}{V} = \rho\ C_p\ \Delta T$$

where ρ is the density of the storage medium.
Materials used for sensible heat storage: Water, Rock, Gravel or Crushed stone, Iron, red iron oxide or iron core, Concrete, Refractory materials like magnesium oxide, aluminium oxide and silicon oxide.

(b) Latent heat storage (phase change energy storage):
In this system, heat is stored in a material when it melts and extracted from the material when it freezes.
Materials that undergo a change of phase in a suitable temperature range will be useful for energy storage if the following criteria can be satisfied:
The phase change must be accompanied by high latent heat effect, i.e.., it must store large quantities of heat.
The phase change must be reversible over a very large number of cycles without degradation.
The phase change must occur with limited super cooling.
Means must be available to contain the material and transfer heat into it and out of it.
The cost of materials and its containers must be reasonable.
Its phase change must occur close to its actual melting temperature.
The material must be available in large quantities.
The preparation of the phase changing material for use must be relatively simple.
The material must be harmless (non-toxic, non-inflammable, non- combustible, non-corrosive).
A small volume change during the phase change.
The material should have high thermal conductivity in both the phases.
If these criteria can be met, phase change energy storage systems can be of high capacities.

Materials for phase change energy storage: Glauber's salt (Na_2SO_4. $10H_2O$), water, $Fe(NO_3)^2$ $6H_2O$, Salt Eutectics.
Glauber's ($Na_2SO_4.10H_2O$ - sodium sulphate decahydrate) - phase changes from solid to liquid, requires less energy than those from liquid to gas.

Phase change materials involving water of dehydration (eg, Glauber's salt) decomposes at about 32°C to give a solution plus Na_2SO_4 with a heat of fusion of 243 kJ per kg (56 kcal/kg) and has been proposed mainly for storing domestic heat.
The reaction is:

$$Na_2SO_4.\ 10H_2O + \text{energy} \rightleftharpoons Na_2SO_4 + 10H_2O$$

Energy storage is accomplished by the reaction proceeding from left to right on addition of heat.
Energy extraction from storage is the reverse procedure, with the reaction proceeding from right to left and thermal effects reversed.
In latent heat storage arrangement, the storage material is placed in long thin containers, e.g., cylinders, and the gas is passed through narrow spaces between the tubes.

Organic compounds - Paraffin and fatty acids - good phase change thermal energy storage materials with a major drawback of higher cost.
Paraffins - possess high heats of fusion, available in large temperature ranges, freezes without supercooling.
Fatty acids - possess a reproducible melting and freezing behaviour, freezes with little or no supercooling.

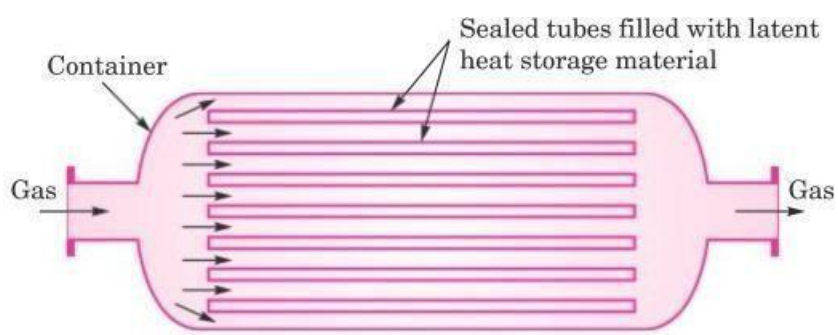

Fig 2.20: A typical latent heat storge arrangement

SOLAR POND:

Introduction:

A natural or artificial body of water for collecting and absorbing solar energy and storing it as heat.

A solar pond combines solar energy collection and sensible heat storage.

The simplest type of solar pond is very shallow, about 5 to 10 cm deep, with a radiation absorbing (e.g., black plastic) bottom.

A bed of insulating material under the pond minimizes loss of heat to the ground.

A curved cover made of transparent fiber glass over the pond permits entry of solar radiation but reduces losses by radiation and convection.

In a suitable climate, all the pond water can become hot enough for use in space heating and agricultural applications.

In a shallow pond, water soon acquires a uniform temperature; usually heats up only a few degrees because of the natural convection currents which are set into motion as soon as heat is absorbed at the bottom.

In a deeper pond, temperature variations generally exist.

Loss of heat from the surface, especially at night, results in circulation of water by convection.

The situation is changed if the pond contains salt water at the bottom with a layer of fresh water above it.

Because of its salt content, the solar pond bottom water is denser than the cooler fresh water at the top, and hence it does not tend to rise.

A relatively stable layer of heated salt water is thus produced at the bottom of the pond with a lighter layer of cooler fresh water, which acts as a heat insulator, above it.

A 'solar pond' is defined as an artificially constructed pond in which significant temperature rises are caused to occur in the lower regions by preventing convection.

The terms 'salt-gradient solar pond’ or 'non-convecting solar pond' are used to distinguish these ponds from 'shallow solar pond'.

Solar ponds promise an economical way over flat-plate collectors and energy storage by employing a mass of water for both collection and storage of solar energy.

The energy is stored in low grade (60 to 100°C) thermal form which is suitable for applications such as space heating, industrial process heat and to obtain mechanical and/or electrical energy.

Principle of operation and description of non-convective solar pond:

A solar pond is a mass of shallow water about 1 or 2 meters deep with a large collection area, which acts like a heat trap.

It contains dissolved salts to generate a stable density gradient.

Part of the incident solar radiation entering the pond's surface is absorbed throughout the depth and the remaining which penetrates the pond is absorbed at the black bottom.
If the pond were initially filled with fresh water, the lower layers would heat up, expand and rise to the surface; due to convective mixing and heat loss at the surface, only a small temperature rise in the pond could be realized.
Convection is eliminated by creating a sufficiently strong salt concentration gradient; thermal expansion in the hotter lower layers is insufficient to destabilize the pond; With convection suppressed, the heat is lost from the lower layers only by conduction.
Because of the relatively low conductivity, the water acts as an insulator and permits high temperature (over 90°C) to develop in the bottom layers.
At the bottom of the pond, a thick durable plastic liner is laid.
Materials used for the liner include butyl rubber, black polyethylene and Hypalon reinforced with nylon mesh.
Salts like magnesium chloride, sodium chloride or sodium nitrate are dissolved in the water.
The concentration of the salt at the surface is low - usually less than 5 percent by weight and thus the water is relatively light.
The salt concentration steadily increases at depth until at the bottom where it is very high, around 20 percent.
Solar pond of depth 2 m has three zones with the following salinity with depth:
Surface convective zone or upper convective zone (0.3 - 0.5 m), salinity < 5%.
Non-convective zone 1 to 1.5 m, salinity increases with depth.
Storage zone or lower convective zone 1.5 to 2 m, salinity ~ 20%.

Surface convective zone - usually has a small thickness, around 10 to 20 cm; it has a low, uniform concentration which is close to zero, as well as a uniform temperature, which is close to the ambient air temperature.
Non-convective zone - much thicker and occupies more than half the depth of the pond; both concentration and temperature increase with depth in it; serves mainly as an insulating layer and reduces heat loss in the upward direction; This part acts as thermal storage as some of the heat collection also takes place in this zone.
Storage zone - lower zone acts as the main heat collection and thermal storage medium; both concentration and temperature are nearly constant in this zone; the deeper the zone, the more heat is stored; lowest zone traps heats for long periods, damping the effects of daily and even seasonal change.
The highest temperature ever recorded in a solar pond is 108°C.Depending on location, water clarity and temperature, the solar pond can capture 10 to 20 percent of the solar energy hitting its surface.

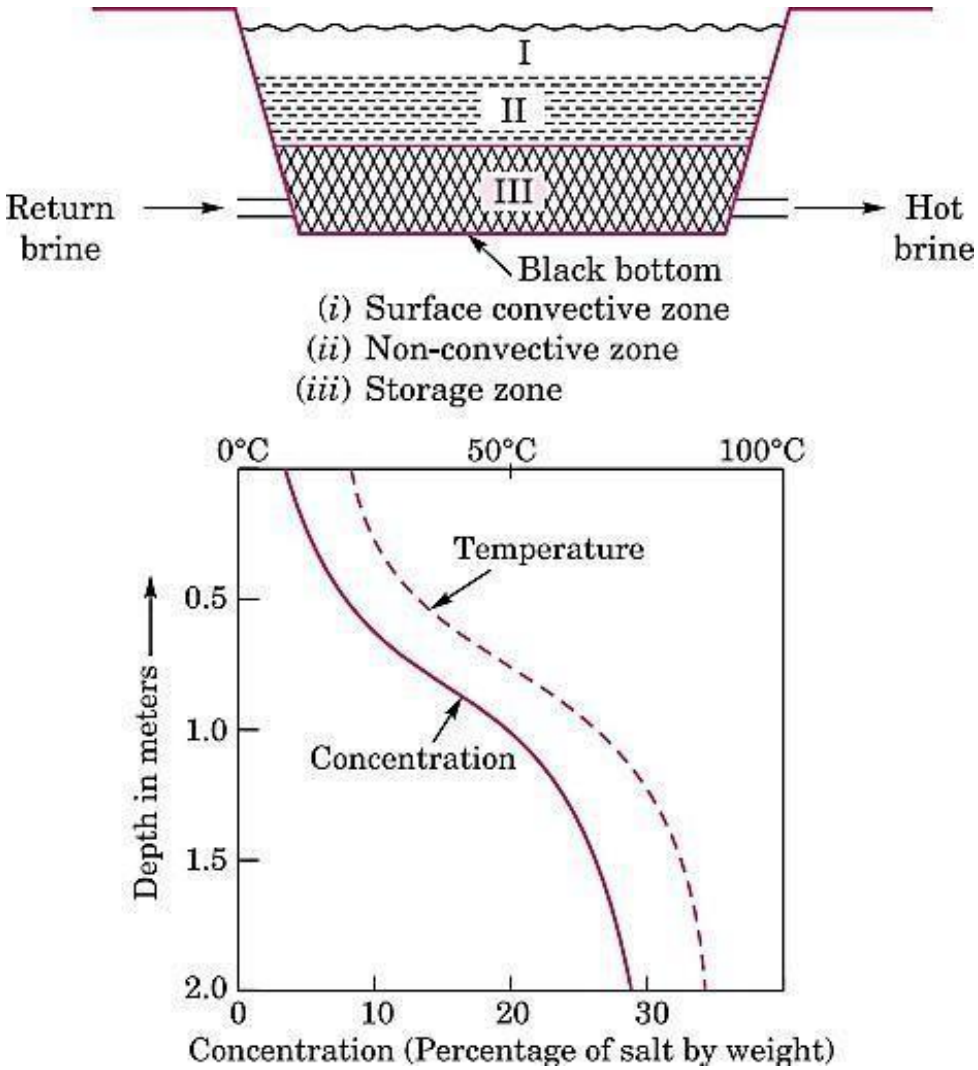

Fig 2.21: Temperature and Concentration profile for a typical Solar Pond

Advantages:

low-cost storage

They can be tapped for energy at night as well as during the day; Even during long periods of cloud cover or even ice cover the stored energy is still available.

As salty water near the bottom heats up, it expands; but it cannot rise because it is denser than the less salty water above.

Thus, the solar pond is 'non-convecting', the warm water stays trapped below.

Heat lost by conduction to the surface is much less than convection loss.

Lower water may even warm up to and above the boiling point of pure water.

Extraction of thermal energy:

Energy is stored in low grade thermal form of the lower convective zone.

Convection in the zone is due to the process of heat extraction, accomplished by hot brine withdrawal and a cool brine return.

It is not practical to cover the bottom of the pond with an array of pipes acting as a heat exchanger due to two reasons.

cost will increase sharply in the case of large ponds of the size of about a square km.

unless there is convection around the pipes heat transfer from the stationary hot brine to the fluid in the pipes will be very poor.

Thermal energy stored in the lower layers of the pond can be easily extracted without disturbing the non-convecting salt gradient zone above.

Hot water can be extracted from a solar pond without disturbing the concentration gradient.

This is achieved by installing the water outlet at the same height as the water inlet.

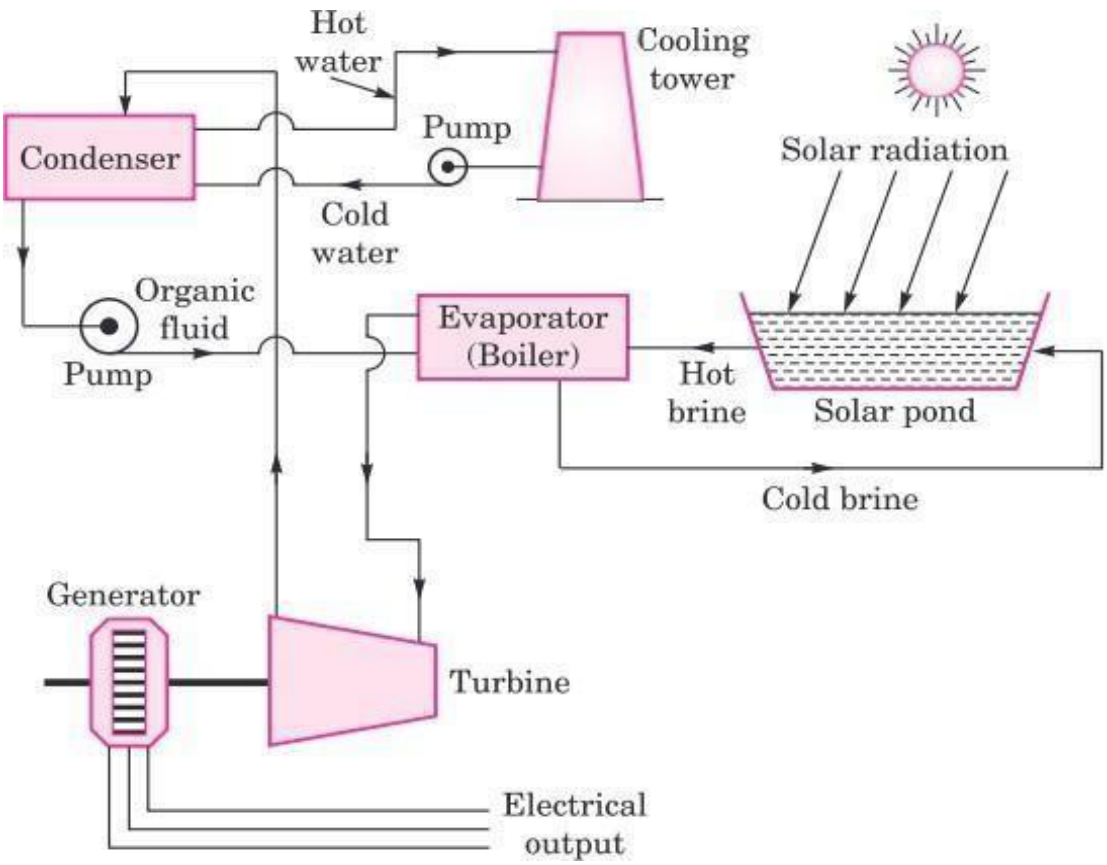

Fig 2.22: Solar pond electric power plant with cooling tower

Hot brine can be withdrawn and cool brine returned in a laminar flow pattern because of the presence of density gradient.

Thermal energy from the solar pond is used to drive a Rankine cycle heat engine.

Hot water from the bottom level of the pond is pumped to the evaporator where the organic working fluid is vaporized (Fig. 32).
Organic fluid has low boiling points. e.g., halo-carbons (Freons - chlorofluorocarbons CFCs, hydrochlorofluorocarbons HCFCs) or hydrocarbons (propane).
The vapor flows under high pressure to the turbine and thereby expanding through the turbine wheel and the electric generator linked to it.
The vapor then travels to the condenser where cold water from the cooling tower condenses the vapor back to a liquid.
The liquid is pumped back to the evaporator where the cycle is repeated.

Applications of Solar Ponds:

(1) Heating and Cooling of Buildings:
Because of the large heat storage capability in the lower convective zone of the solar pond, it is used for heating even at high latitude stations and for several cloudy days.

(2) Production of Power:
A solar pond can be used to generate electricity by driving a thermo-electric device or an organic Rankine cycle engine - a turbine powered by evaporating an organic fluid with a low boiling point.

(3) Industrial Process Heat:
Industrial process heat is the thermal energy used directly in the preparation and of treatment of materials and goods manufactured by industry (e.g., crop drying, paper industry); saves oil, natural gas, electricity, and coal.

(4) Desalination:
The low-cost thermal energy can be used to desalt or purify water for drinking or irrigation. Multi-flash desalination units along with a solar pond is an attractive proposition for getting distilled water.

(5) Heating animal housing and drying crops on farms:
Low grade heat can be used in several ways in farms which have enough land for solar ponds.

(6) Heat for biomass conversion:
Site built solar ponds could provide heat to convert biomass to alcohol or methane.

FUNDAMENTALS OF SOLAR ENERGY AND PV TECHNOLOGY:

Solar photovoltaic (PV) systems convert solar energy directly into electrical energy.
The photovoltaic effect is defined as the generation of an electromotive force because of the absorption of ionizing radiation.
Energy conversion devices which convert sunlight to electricity using the photovoltaic effect are called solar cells.
A single converter cell is called a solar cell or a photovoltaic cell, and combination of such cells designed to increase the electric power output is called a solar module or solar array.
Photovoltaic cells are made of semiconductors that generate electricity when they absorb light.
As photons are received, free electrical charges are generated that can be collected on contacts applied to the surfaces of the semiconductors.
Commercial photocells have efficiencies in the range of 10–20 per cent and can approximately produce an electrical energy of about 1 kWh per sq. m per day in ordinary sunshine.
It produces a potential difference of about 0.5 V and a current density of about 200 A per sq. m. of cell area in full solar radiation of 1 kW per sq. m.
A typical commercial cell of 100 sq-cm area thus produces a current of 2A.

Applications:
space satellites
remote radio communication booster stations
marine warning lights
lighting
water pumping
medical refrigeration in remote areas especially in developing countries
Solar powered vehicles
battery charging

Advantages of solar PV systems over conventional power systems:
It converts solar energy directly into electrical energy without going through thermal-mechanical link.
It has no moving parts hence it gives almost maintenance free service for long periods and can be used unattended at inaccessible locations.
reliable, modular, durable and generally maintenance free.
quiet, compatible with almost all environments, respond instantaneously to solar radiation and have an expected life span of 20 years or more.
It can be located at the place of use and hence no or minimum distribution network is required, as it is universally available.

Disadvantages:
At present the costs of solar cells are high (about 60 % of the total system cost), making them economically uncompetitive with other conventional power sources.
The efficiency of solar cells is low (10 – 20 %).
As solar radiation density is also low, large area of solar cell modules are required to generate sufficient useful power.
As solar energy is intermittent, electrical energy storage should ensure the availability of power in absence of sun. This makes the system more expensive.

SOLAR CELL, MODULE AND ARRAY CONSTRUCTION:

Solar Cell:
The basic cell structure of a typical N-on-P, bulk silicon cell is shown in Fig. 33.
The bulk material is P-type silicon with thickness 100 to 350 microns, depending on the technology used.
A thin layer of N-type silicon is formed at the top surface by diffusing an impurity from Vth group (phosphorus most common) to get a PN junction.

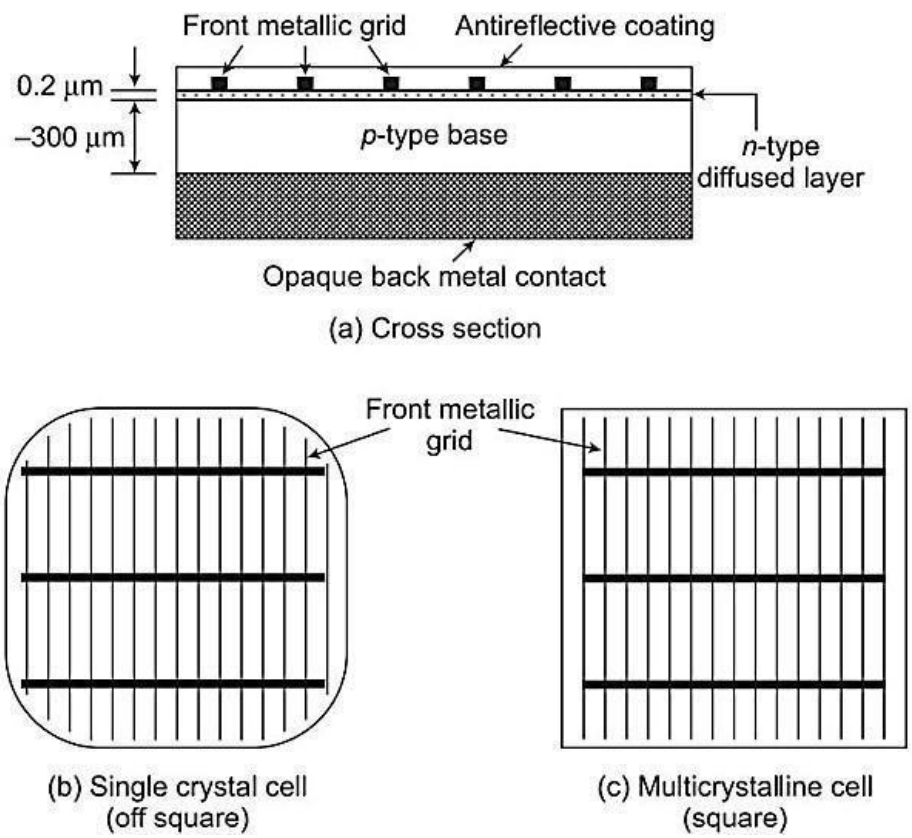

Fig 2.23: Construction of a silicon cell

The top active surface of the N layer has an ohmic contact with metallic grid structure to collect the current produced by impinging photons.
The metallic grid covers minimum possible top surface area (less than 10 per cent of the total area) to leave enough uncovered surface area for incoming photons.
The bottom inactive surface also has an ohmic metallic contact over the entire area.
These two metallic contacts on P and N layers respectively form the positive and negative terminals of the solar cell.
In addition to basic elements, several enhancement features are also included in the construction. e.g., providing antireflective coating, textured finish of the top surface and reflective, textured rear surface to capture maximum photons and direct them toward the junction.

Solar PV Module:
A bare single cell cannot be used for outdoor energy generation by itself because the output of a single cell is very small, and it requires protection (encapsulation) against dust, moisture, mechanical shocks and outdoor harsh conditions.
Workable voltage and reasonable power are obtained by interconnecting an appropriate number of cells.
Cells from same batch are used to make PV module; This is done to ensure that mismatch losses are minimal in the module.
The electrically connected cells are encapsulated using two sheets of Ethylene Vinyl Acetate (EVA) at either side.
EVA is a good electrical insulator, transparent material and has very low water absorption.

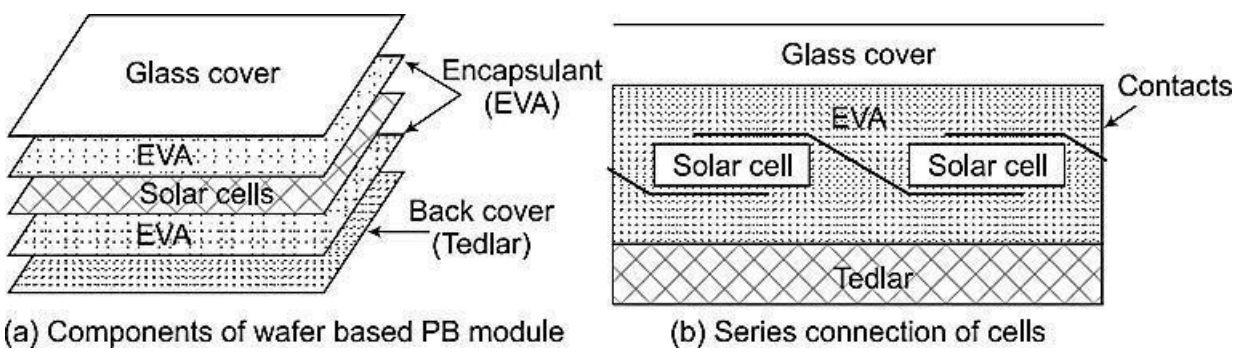

Fig 2.24: PV Module

The encapsulant cannot provide rigidity to the module, for which glass is provided at the front side of the module.
At the rear side of the module a hard polymer material (Poly Vinyl Fluoride - PVF, also known as tedlar) is used.

These layers are arranged as shown in Fig. 34 and hermetically sealed to make it suitable for outside applications for 20-30 years without environmental degradation.
This assembly is known as solar module – a basic building block of a PV system.
Most common commercial modules have a series connection of 32 or 36 silicon cells to make it capable of charging a 12 V storage battery.

Solar PV panel:
Several solar modules are connected in series/parallel to increase the voltage/current ratings. Figure shows the construction of module and panel.

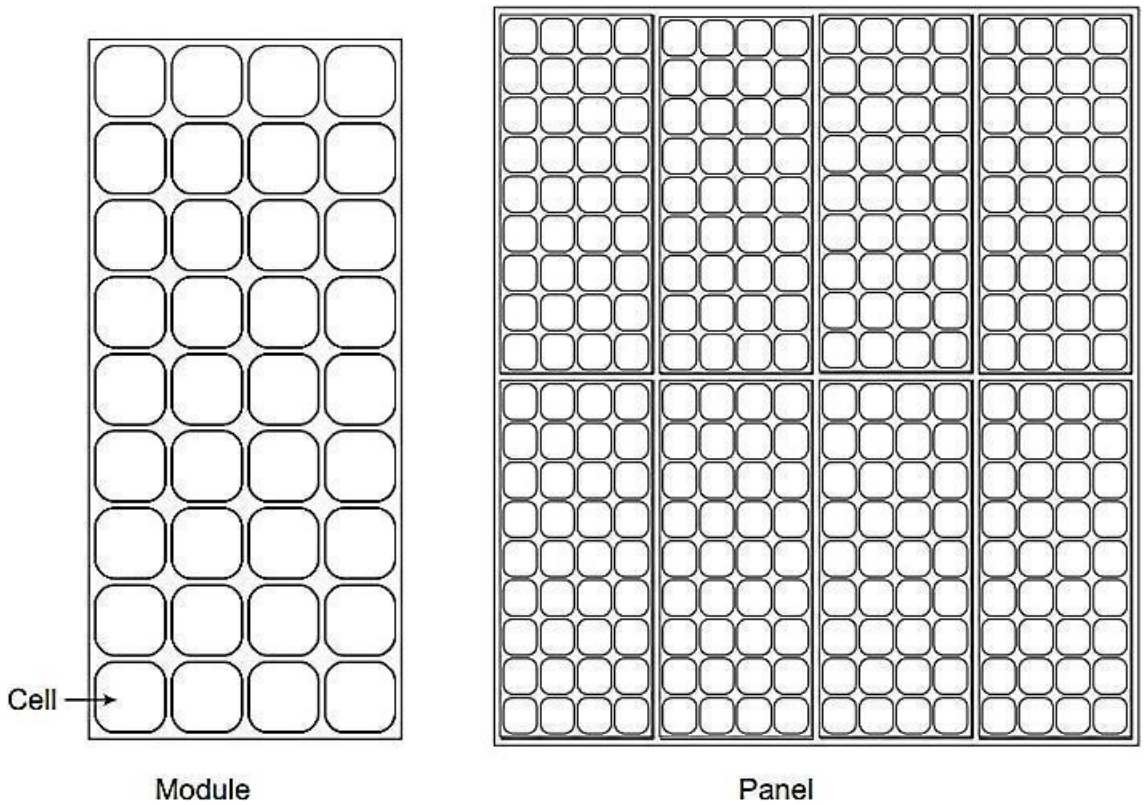

Fig 2.25: PV cell, Module and Panel

Figure shows a series-parallel connection of modules in a panel.
In parallel connection, blocking diodes are connected in series with each series string of modules, so that if any string should fail, the power output of the remaining series strings will not be absorbed by the failed string.
Bypass diodes are installed across each module, so that if one module should fail, the output of the remaining modules in a string will bypass the failed module.
Some modern PV modules come with such internally embedded bypass diodes**.**

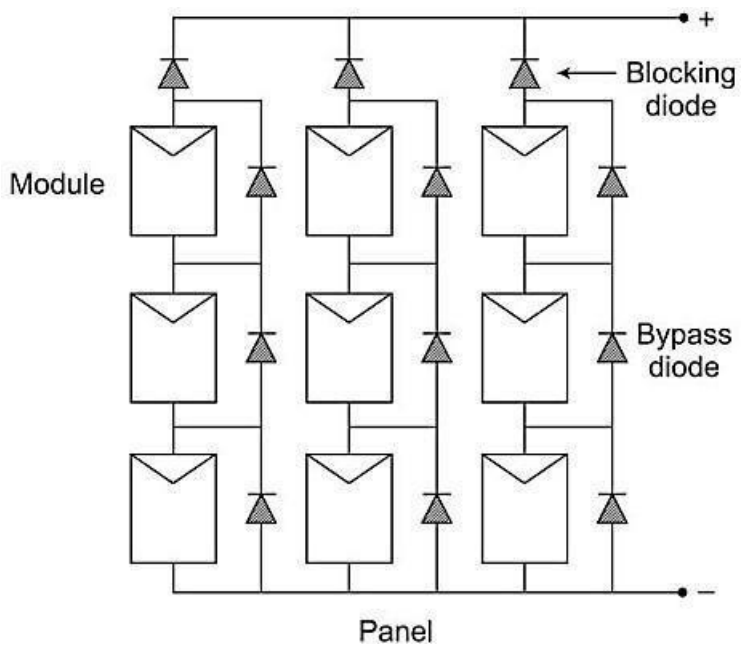

Fig 2.26: A typical panel: Series-parallel connection of modules

Solar PV Array:
Many interconnected solar panels, known as solar PV array, are installed in an array field.
These panels may be installed as stationary or with sun tracking mechanism.
It is important to ensure that an installed panel does not cast its shadow on the surface of its neighbouring panels during a whole year.
The layout and mechanical design of the array such as tilt angle of panels, height of panels, clearance among the panels is carried out taking into consideration the local climatic conditions, ease of maintenance, etc.

TYPES OF SOLAR POWER PLANTS: GRID-TIED, OFF-GRID & HYBRID SYSTEMS:

GRID-TIED OR GRID-INTERACTIVE SYSTEMS:
This system is connected to the utility grid with two-way metering system.
It may be a small rooftop system owned and operated by the house owner, or a relatively bigger (rack mounted) system meant for the whole village or a community.
It meets daytime requirements of the house owner without any battery backup and surplus power is fed to the grid.
During peak hours and during nights the energy shortage may be met from grid.
The grid serves as infinite source or sink of energy.
Grid-connected PV systems usually employ two stages, to appropriately condition the available solar power for feeding into the grid as shown in Figure.

- While the first stage is used to track the maximum solar power, the second stage inverts this DC power into high quality AC power.

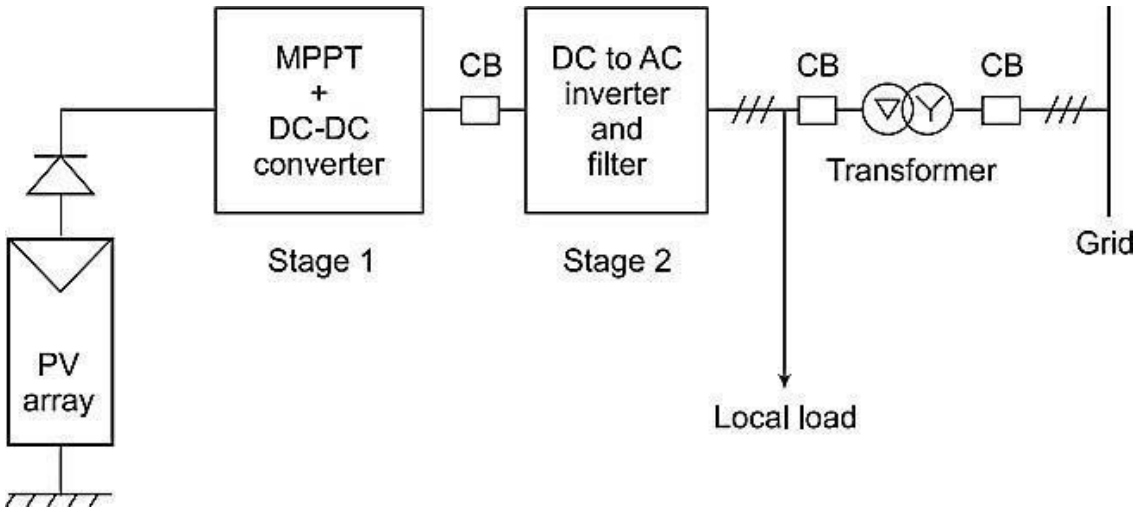

Fig 2.27: A typical grid connected solar PV system

OFF-GRID OR STANDALONE SYSTEMS:

It is located at the load centre and dedicated to meet all the electrical loads of a village/community or a specific set of loads.

Energy storage is generally essential.

It is most relevant and successful in remote and rural areas having no access to grid supply; capacity of such a system is 10 W – 100 kW.

Various types of configurations for stand-alone PV system are shown in Fig. 38. Configuration 1:

A dc load is directly connected to PV panel.

This is the simplest possible configuration.

Power is available only during sunshine hours and no arrangement is made for power storage.

Such type of arrangement may be used for supplying raw dc load such as minor irrigation. Configuration 2:

A regulated power is supplied to the load.

A DC-DC converter is inserted between panel and load.

The converter can be controlled using MPPT algorithm to extract maximum power from the PV panel.

Usually when MPPT is implemented a battery is used to absorb excess power, which the load cannot consume.

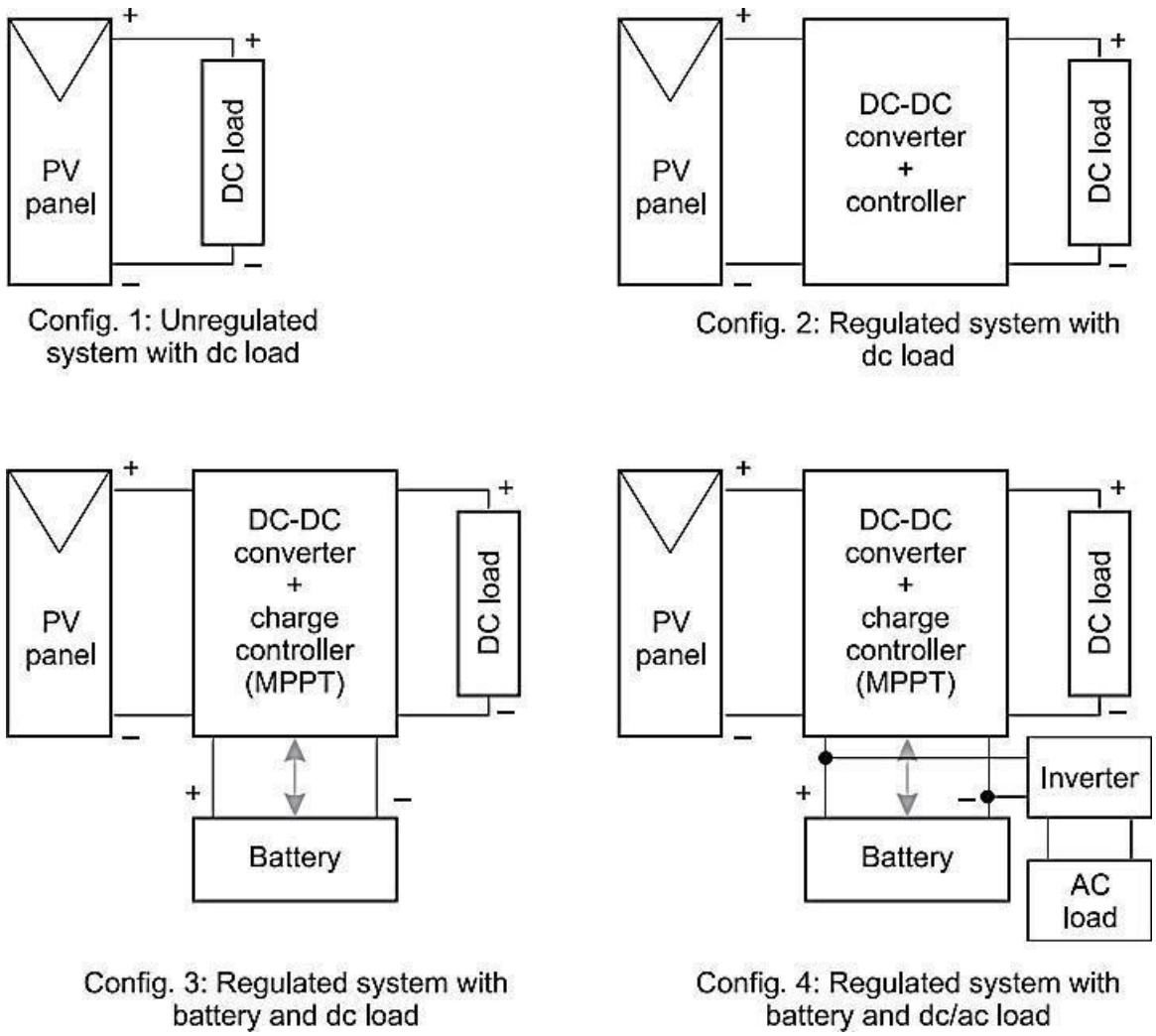

Fig 2.28: Various off-grid or standalone system configurations

Configuration 3:
It is used for loads such as lighting for which battery storage is required
For safe charging and discharging operation a charge controller is also required.
The use of battery ensures uninterrupted and smooth power availability.
In the charge controller operation, MPPT may also be implemented to optimize the use of solar power.
Configuration 4:
It also includes ac loads for which an inverter is required.
Since most of the commonly available loads are ac type, this configuration is suitable for most domestic and commercial applications.

HYBRID SYSTEMS:

Sometimes, it is not economical or practical to provide all energy from PV system.

In such cases, it may be more economical to provide some of the system energy needs by another means, such as diesel/gasoline generator or any other non-conventional source like wind or fuel cell. Such a system is called hybrid system.

The best cost-effectiveness is obtained when none of the PV generated energy is wasted.

The integrated system provides auxiliary support and better reliability. Such a system is known as hybrid system.

A hybrid system requires lesser amount of battery storage.

Two typical hybrid configurations, known as series and parallel are shown in Fig. 39.

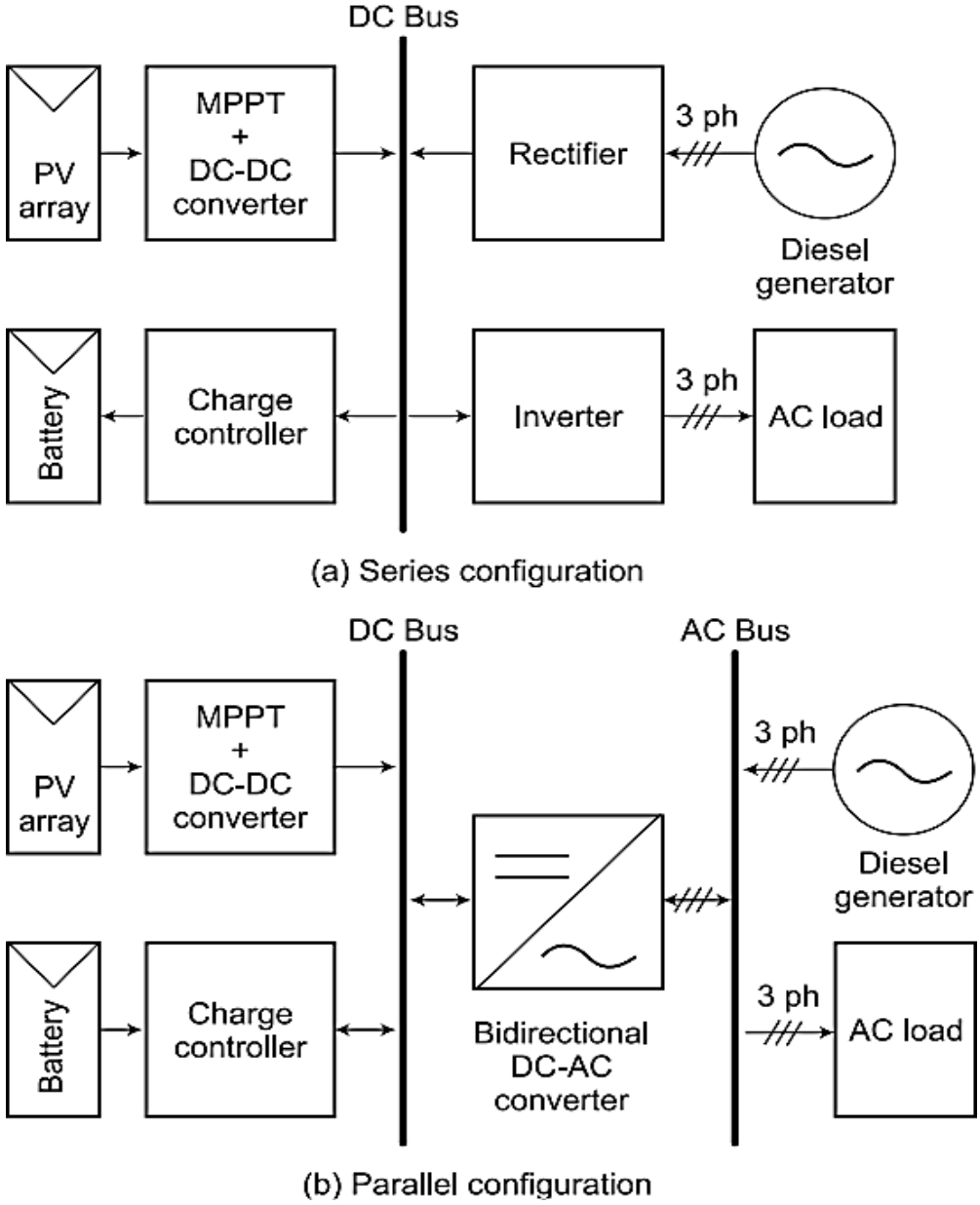

Fig 2.29: Solar PV hybrid configurations

Series configuration:
PV array is connected to DC bus through charge controller and DC-DC converter to extract maximum PV power and raise its voltage to required level.
The power generated by diesel source is first rectified to DC and then again converted to AC to feed the AC load.
Battery is used to manage the balance of power.
The configuration is known as series configuration because the two ac sources, diesel generator and inverter are connected in series.
The generator supplies the load through series of rectifier and inverter.
Therefore, the inverter supplies the total ac load current.

Parallel configuration:
Two sources, the diesel generator and the inverter are connected in parallel to AC load.
As a result, the rating of the inverter is less, and the efficiency is higher.
Proper synchronization is required between the output of diesel generator and inverter.

DESIGN CONSIDERATIONS FOR SOLAR POWER PLANTS:

Site Selection:
Selecting the optimal site ensures maximum solar energy capture and minimizes installation and maintenance challenges. Key factors in site selection are:

Solar Irradiance:
Areas with high solar radiation (kWh/m²/day) are preferred.
Global Horizontal Irradiance (GHI) and Direct Normal Irradiance (DNI) data help assess to optimal sunlight exposure.

Climate Conditions:
High temperature can reduce panel efficiency due to increased resistance.
Humidity and dust can cause panel degradation and require frequent cleaning.
Strong winds may damage panels, requiring robust mounting structures.

Land Availability and Terrain:
Flat or gently sloping land reduces construction costs.
Stable soil prevents structural issues with panel mounting.
Flood-prone or landslide-prone areas should be avoided.

Accessibility and Infrastructure:
Closer proximity to substations and transmission lines reduces energy losses.
Road Accessibility facilitates transport, installation, and maintenance.
Water Supply is important for cleaning panels, especially in dusty regions.

Environmental and Regulatory Constraints:
Avoid ecologically sensitive areas and ensure compliance with environmental impact regulations; Necessary permits and approvals should be taken from local authorities.

Orientation:
Proper orientation and tilt angle maximize solar panel efficiency by optimizing sunlight capture. Optimal Tilt Angle:
In Fixed-Tilt Systems, the tilt angle should be approximately equal to the latitude of the location.
Seasonal Adjustments: During winter - steeper tilt to capture lower-angle sunlight.
During summer - shallower tilt for higher sun position.
Panel Orientation:
For the Northern Hemisphere: South-facing panels maximize sunlight exposure.
For the Southern Hemisphere: North-facing panels are preferred.
For equatorial regions: Minimal tilt with an east-west axis may be optimal. Tracking Systems:
Single-axis tracking: Adjusts panel angle to follow the sun from east to west, improving efficiency by 15-25%.
Dual-axis tracking: Adjusts both tilt and orientation for maximum sunlight capture but increases costs.

Shading Analysis:
Shading reduces solar panel efficiency. Identifying Potential Obstructions
Natural obstructions: Trees, hills, mountains.
Man-made obstructions: Buildings, poles, nearby structures. Tools for Shading Analysis
Solar pathfinder and shading analysis software (e.g., PVsyst, Helioscope, SAM) help model shading impacts.
Sun path diagrams help predict shading over different seasons. Panel Spacing Considerations
Row-to-row spacing should prevent inter-row shading, especially in winter months.
Shadow length calculation ensures minimal losses due to nearby structures. Bypass Diodes and Microinverters
Bypass diodes in PV modules minimize energy loss from shaded cells.
Microinverters or optimizers help mitigate shading effects by maximizing energy output from each panel.

PV system components and their functionalities:

1. Photovoltaic cell:
Thin squares, discs, or films of semiconductor material that generate voltage and current when exposed to sunlight.

2. Solar Panels (PV Modules):
Photovoltaic cells wired together and laminated between a clear strait glazing and encapsulating substrate.
Function: Convert sunlight into direct current (DC) electricity.
Made of silicon solar cells (monocrystalline, polycrystalline, or thin film).
Performance is measured in watts (W) based on efficiency and sunlight exposure.
Types of PV Modules:
Monocrystalline: High efficiency, long lifespan, best for limited space.
Polycrystalline: Lower cost, slightly less efficient than monocrystalline.Thin-film: Flexible, lightweight, but lower efficiency.

3. Array:
One or more modules with mounting hardware and wired together at specific voltage.

4. Solar Inverter
Function: Converts DC electricity from solar panels into alternating current (AC), which is used by most electrical appliances.
Types of Inverters:
String Inverter: Single inverter for multiple panels, cost-effective but less efficient under shading.
Microinverter: Individual inverter for each panel, improves efficiency in shaded conditions.
Hybrid Inverter: Works with batteries, allowing energy storage and grid interaction.
Central Inverter: Used in large-scale solar farms for high power capacity.

5. Mounting Structures
Function: hold the PV panels at an optimal angle and direction for maximum sunlight exposure.
Types:
Fixed Tilt Mounts: Static structures with a set tilt angle.
Adjustable Tilt Mounts: Can be manually adjusted seasonally.
Tracking Systems: Move with the sun to maximize solar energy capture (single- axis or dual-axis tracking).

6. Charge Controller (for Off-Grid or Hybrid Systems)
Function: Regulates voltage and current from solar panels to prevent battery overcharging and deep discharging.
Types:
PWM (Pulse Width Modulation): Cost-effective but less efficient.
MPPT (Maximum Power Point Tracking): More efficient, adjusts voltage to maximize power output.

7. Battery Storage (for Off-Grid and Hybrid Systems)
Function: Stores excess electricity for use when sunlight is unavailable.
Types of Batteries:
Lead-Acid: Affordable but lower lifespan and efficiency.
Lithium-Ion: Higher efficiency, longer lifespan, lightweight, but more expensive.
Flow Batteries: Suitable for large-scale storage with longer cycles.

8.Balance of System (BOS) Components
Function: Additional components necessary for system functionality and safety.
Key BOS components are:
DC/AC Disconnects: Safety switches to isolate components for maintenance.
Wiring & Connectors: Carry electrical current between components.
Fuses & Circuit Breakers: Protect against overcurrent and short circuits.
Grounding System: Prevents electrical faults and enhances safety.

9 Monitoring System
Function: Tracks system performance and identifies faults in real-time.

Types:
On-Site Monitors: Display energy production on an LCD screen.
Cloud-Based Monitoring: Provides remote access via mobile apps or web platforms.

10.Grid Connection (for Grid-Tied Systems)
Function: Allows excess electricity to be exported to the utility grid and enables net metering.
Key components:
Net Meter: Measures energy sent to and drawn from the grid.
Grid-Tie Inverter: Synchronizes the solar system's output with grid voltage and frequency.

11.DC loads:
Appliances, motors, and equipment powered by DC.

12.AC loads:
Appliances, motors, and equipment powered by AC.

Operation, Maintenance and Performance Monitoring of Solar Power Plants: Operation of Solar Power Plants:
Solar panels convert sunlight into DC electricity.
Inverters convert DC into AC electricity for grid or consumption.
Grid connection or battery storage manages energy distribution.
The key operational aspects are:

- Load Management - Balancing energy generation with demand.
- Power Conditioning - Ensuring stable voltage and frequency output.

Maintenance of Solar Power Plants:
Regular maintenance is required to prevent efficiency losses and ensure the plant operates at peak performance.
Preventive Maintenance (Scheduled Checks)
Solar Panel Cleaning: Dust, dirt, and bird droppings reduce efficiency. Cleaning is done periodically based on site conditions.
Electrical Component Inspection: Regular checks on inverters, wiring, fuses, and connectors to prevent failures.
Structural Inspection: Checking mounting structures for corrosion, misalignment, or mechanical stress.
Grounding and Safety Measures: Ensuring proper earthing and lightning protection.

Corrective Maintenance (Fault Repairs)
Inverter Failures: Replacing or repairing faulty inverters as they are critical for energy conversion.
Module Replacement: Damaged or degraded panels may need replacement.
Cable and Connector Issues: Checking loose connections, overheating, or electrical faults.

Predictive Maintenance (Using Data Analytics)
Thermal Imaging Drones: Detecting hot spots in solar panels.

AI-based Monitoring: Using predictive analytics to detect anomalies before failures occur.

Performance Monitoring of Solar Power Plants:

Key Performance Indicators

Energy Yield (kWh/kWp): Measures system efficiency.

Performance Ratio (PR): PR = (Actual Energy Output) / (Theoretical Energy Output); PR of 80-90% is ideal.

Capacity Utilization Factor (CUF): Measures plant efficiency over time.

Inverter Efficiency: Ensuring inverters operate at optimal efficiency (typically 95-98%).

Module Degradation Rate: Tracking panel efficiency losses over time. Monitoring Systems

SCADA (Supervisory Control and Data Acquisition): Provides real-time data on energy production and system health.

IoT-Based monitoring: Remote monitoring via cloud-based dashboards and mobile apps.

Weather stations: Measure solar irradiance, temperature, wind speed, and humidity for performance analysis.