lab0

lab0-1

反相器的电压传输特性

- 实验截图

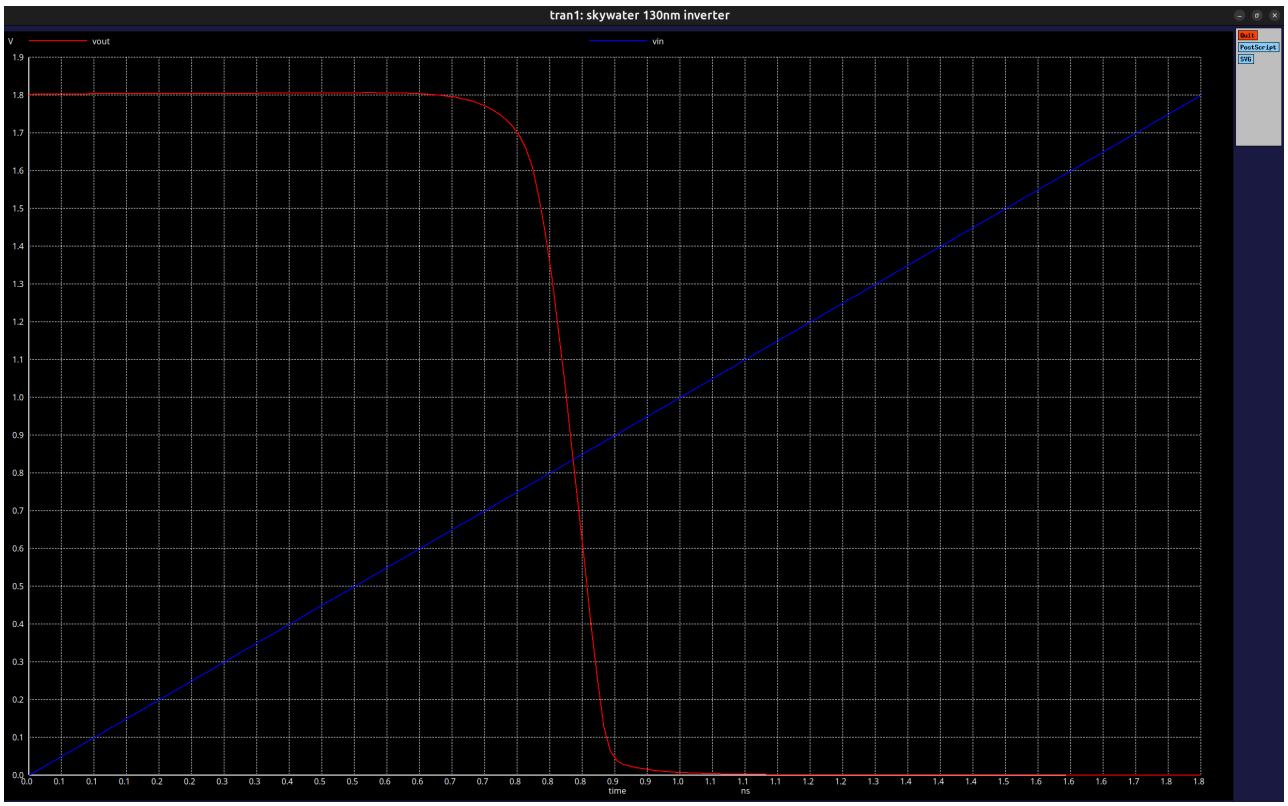

- 输入输出关系
  i. 当输入电压Vin为低电平（接近0V）时，输出电压Vout为高电平（接近1.8V）
  ii. 当输入电压Vin为高电平（接近1.8V）时，输出电压Vout为低电平（接近0V）
  iii. 当输入电压Vin在0.8v~0.9v附近发生变化时，输出电压发生剧烈变化，从高电平跳变到低电平
- 正弦变化的输入电压

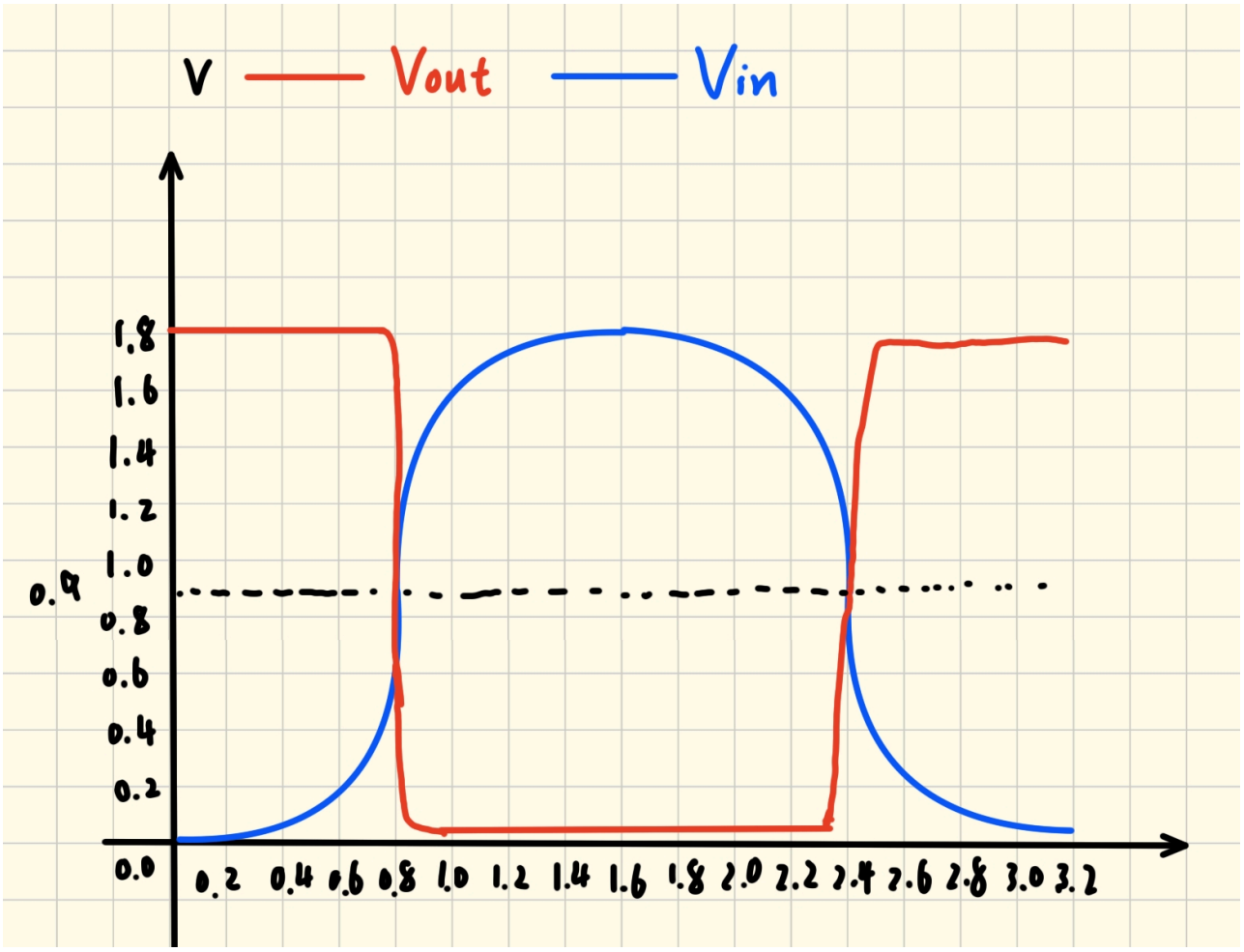

描述：Vout在Vin位于0.8v~0.9v附近发生跳变，共发生两次翻转，分别从高电平跳变到低电平和从低电平跳变到高电平。

- 逻辑0/1的阈值设定
  - Vin输入电压0$_{0.7V为0}$，$_{1.0}$1.8V为1
  - Vout输出电压0.0$_{0.1V为0}$，$_{1.7}$1.8V为1

Logisim电路仿真

- 实验截图
  - 绘图过程

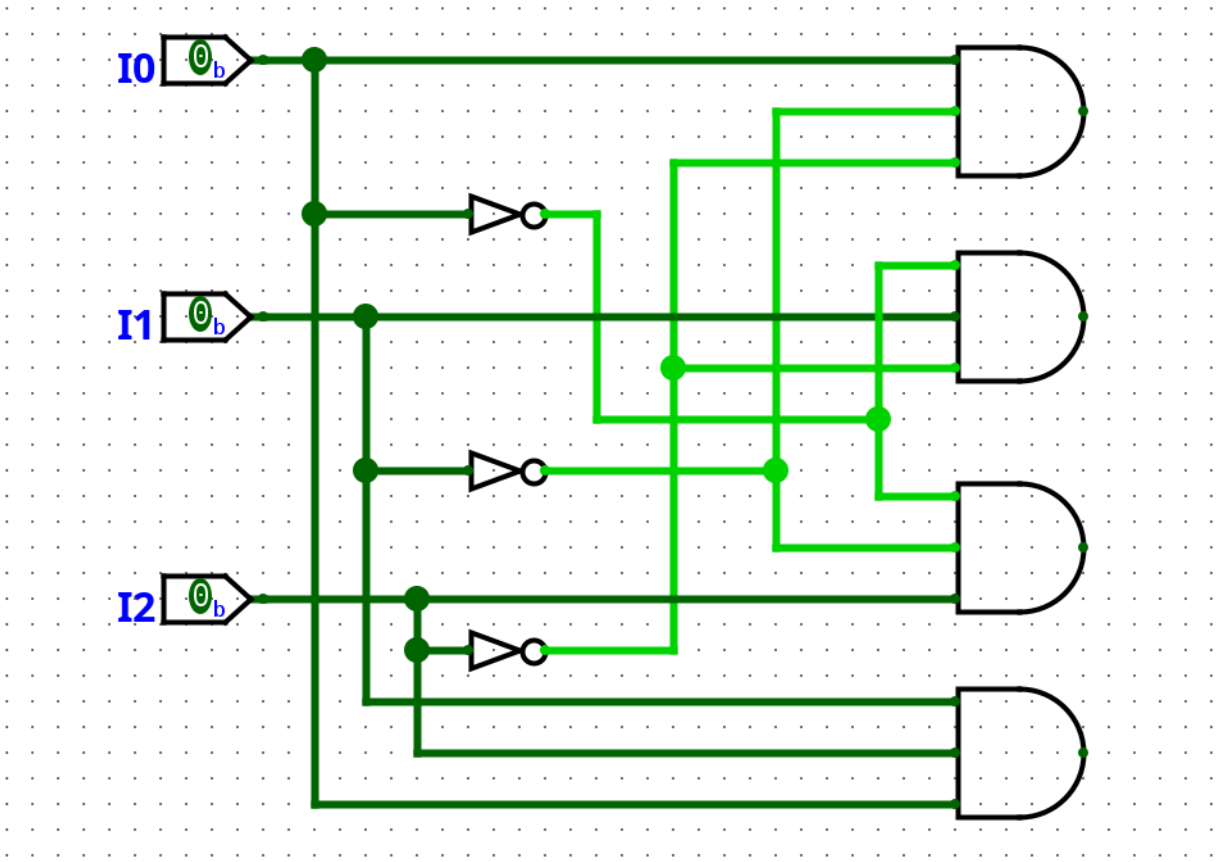

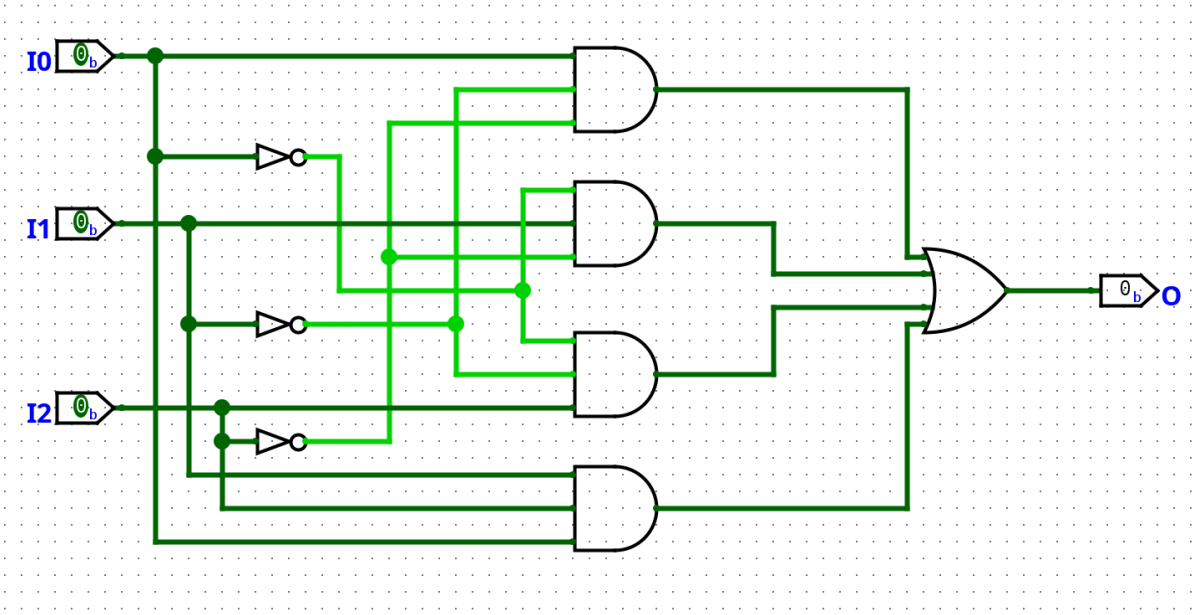

- 电路仿真

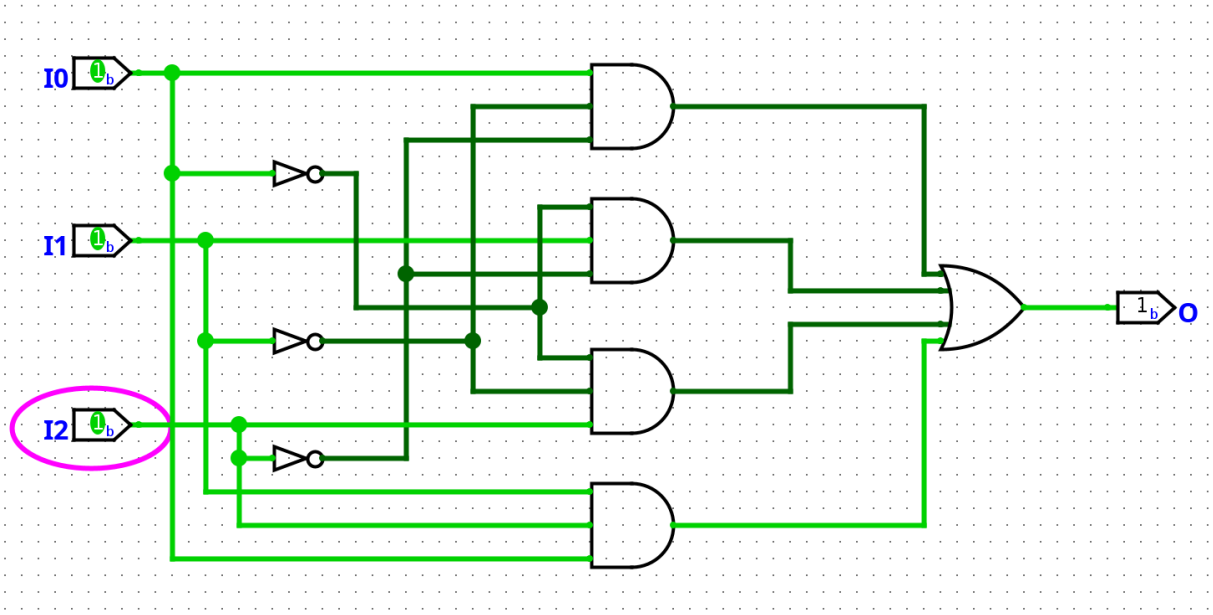
I0
I1
I2
O

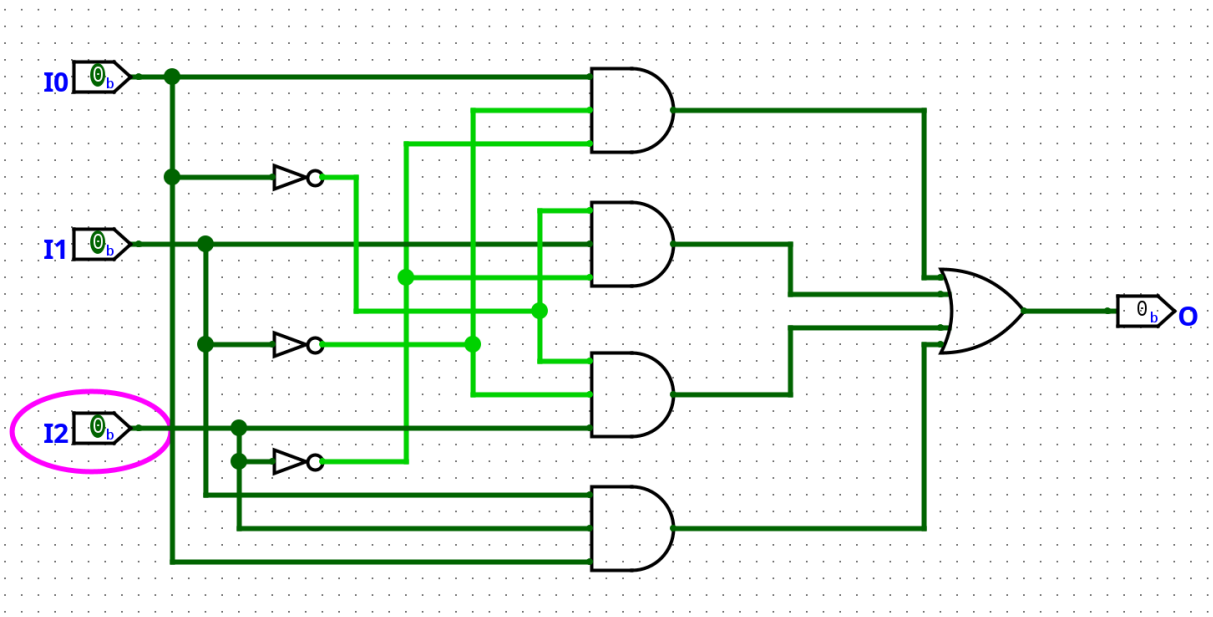
I0
I1
I2
O

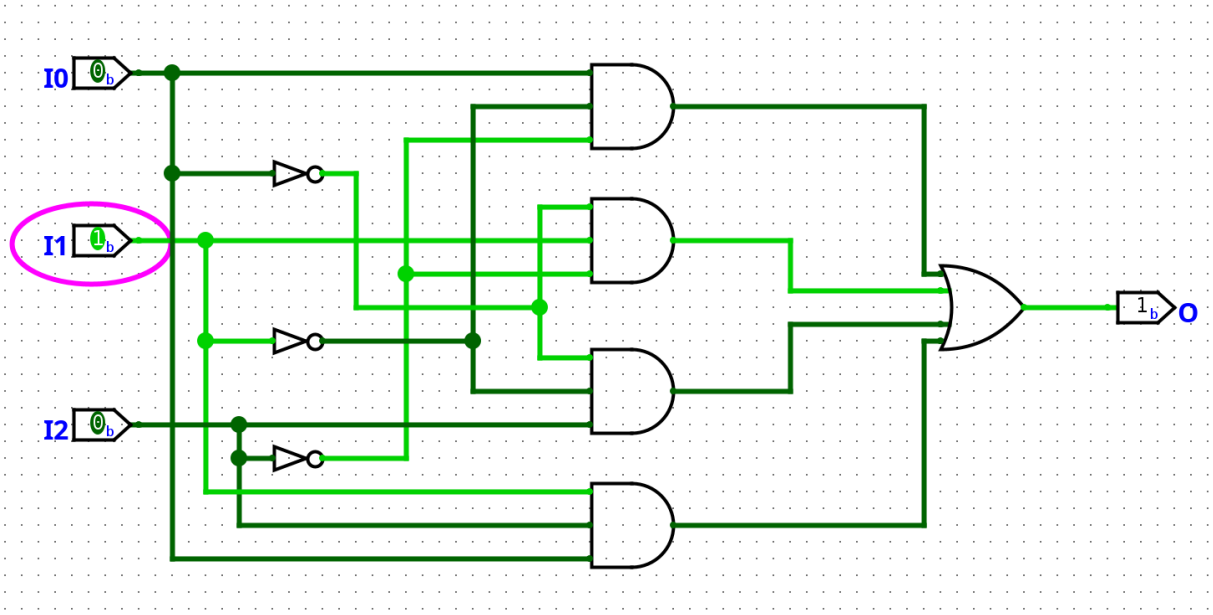

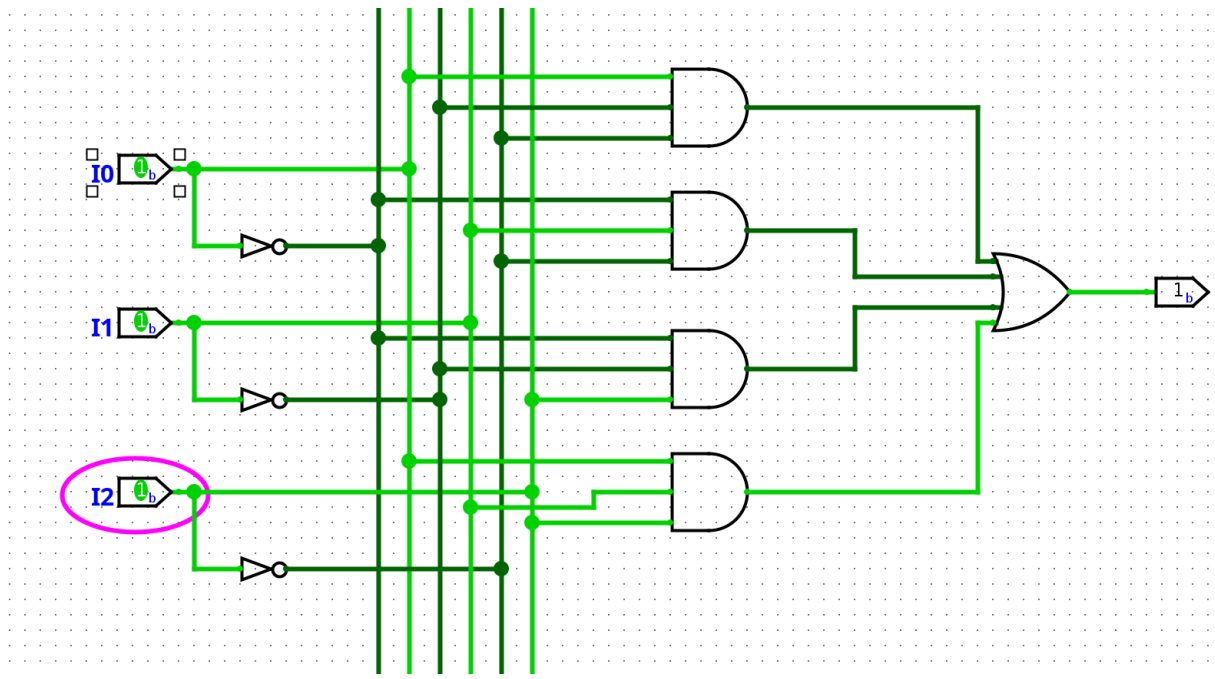

- **输入输出**

Input	Output
I0 I1 I2	O
0 0 0	0
0 0 1	1
0 1 0	1

Input	Output
0 1 1	0
1 0 0	1
1 0 1	0
1 1 0	0
1 1 1	1

- **实现功能**
  当只有一个input或全部input为真，output为真，其余皆为假

---

lab0-3

Verilog练习

- main.v

```
module main(
 input I0,
 input I1,
 input I2,
 input I3,
 output O
  );

 wire wire1;
 wire wire2;
 wire wire3;
 wire wire4;
 wire wire5;

 AND_GATE_3_INPUTS #(.BubblesMask(3'b000)) GATES_1(
    .input1(~I1),
    .input2(~I2),
    .input3(~I3),
    .result(wire1)
 );
 AND_GATE_3_INPUTS #(.BubblesMask(3'b000)) GATES_2(
    .input1(~I0),
    .input2(I2),
    .input3(~I1),
    .result(wire2)
 );
 AND_GATE_3_INPUTS #(.BubblesMask(3'b000)) GATES_3(
    .input1(~I0),
    .input2(I1),
    .input3(I3),
    .result(wire3)
 );
 assign wire4 = I2 & I3;
 assign wire5 = I0 & I2;

 OR_GATE_4_INPUTS #(.BubblesMask(4'h0)) GATES_4(
    .input1(wire1),
    .input2(wire2),
    .input3(wire3),
```

```
    .input4(wire4 | wire5),
    .result(O)
);
 endmodule
```

- **代码解释**
  - 函数表达式为F(A,B,C,D)=$\overline{BCD}$+$\overline{A}C\overline{B}$+$\overline{A}$BD+CD+AC
  - 则需要五条wire分别代表每个**和取子句**的输出，并将五条wire的输出接入**五路与门**来实现
  - 使用现有的**三路与门**和&可以轻松表达和取子句，因为没有五路或门而使用现有的四路或门，需要将两条wire的输出用|合并作为四路或门的一条输入
  - #(.BubblesMask(3'b000))的使用：由于直接拷贝的lab0-2的三路与门和四路或门，而这两个代码是自动生成的，运用了**BubblesMask参数**，我最开始并没有注意到这个问题，导致仿真结果出错，经由AI的查询，明白要设置参数，**希望望与门直接使用这些取反后的信号，而不再进行额外的内部取反。**

- top.v

```
module top(
input SW0,
input SW1,
input SW2,
input SW3,
output LD0
  );

main main1 (
    .I0(SW0),
    .I1(SW1),
    .I2(SW2),
    .I3(SW3),
    .O(LD0)
);

endmodule
```

- **代码解释**
  - 需要在top模块里面，将FPGA的物理引脚（输入输出端口）连接到main.v
  - 需要在top.v中实例化**main**这个模块，将**top.v**的输入输出端口链接到**main**模块对应的端口上
  - 通**这个模块，将**top.v**的输入输出端口链接到**main**模块对应的端口上
  - 通过.xdc**引脚约束文件**将 Verilog 代码中定义的 **逻辑端口**映射到 FPGA 芯片的**物理引脚**上

- nexysa7.xdc

```
## IO
set_property PACKAGE_PIN {J15} [get_ports {SW0}]
set_property IOSTANDARD {LVCMOS33} [get_ports {SW0}]
set_property PACKAGE_PIN {L16} [get_ports {SW1}]
set_property IOSTANDARD {LVCMOS33} [get_ports {SW1}]
set_property PACKAGE_PIN {M13} [get_ports {SW2}]
set_property IOSTANDARD {LVCMOS33} [get_ports {SW2}]
set_property PACKAGE_PIN {R15} [get_ports {SW3}]
set_property IOSTANDARD {LVCMOS33} [get_ports {SW3}]
# add IO
set_property PACKAGE_PIN {H17} [get_ports {LD0}]
set_property IOSTANDARD {LVCMOS33} [get_ports {LD0}]
```

- **输出结果**

Input1	Input2	Input3	Input4	Output
0	0	0	0	1
0	0	0	1	0
0	0	1	0	1
0	0	1	1	1
0	1	0	0	0
0	1	0	1	1
0	1	1	0	0
0	1	1	1	1
1	0	0	0	1
1	0	0	1	0
1	0	1	0	1

Input1	Input2	Input3	Input4	Output
1	0	1	1	1
1	1	0	0	0
1	1	0	1	0
1	1	1	0	1
1	1	1	1	1

仿真练习

- testbench.v

```
module Testbench;

  reg I0,I1,I2,I3;
  wire O;

  initial begin
      I0 = 0; I1 = 0; I2 = 0; I3 = 0;
      #5;
      I0 = 0; I1 = 0; I2 = 0; I3 = 1;
      #5;
      I0 = 0; I1 = 0; I2 = 1; I3 = 0;
      #5;
      I0 = 0; I1 = 0; I2 = 1; I3 = 1;
      #5;
      I0 = 0; I1 = 1; I2 = 0; I3 = 0;
      #5;
      I0 = 0; I1 = 1; I2 = 0; I3 = 1;
      #5;
      I0 = 0; I1 = 1; I2 = 1; I3 = 0;
      #5;
      I0 = 0; I1 = 1; I2 = 1; I3 = 1;
      #5;
      I0 = 1; I1 = 0; I2 = 0; I3 = 0;
      #5;
      I0 = 1; I1 = 0; I2 = 0; I3 = 1;
      #5;
      I0 = 1; I1 = 0; I2 = 1; I3 = 0;
      #5;
      I0 = 1; I1 = 0; I2 = 1; I3 = 1;
      #5;
      I0 = 1; I1 = 1; I2 = 0; I3 = 0;
      #5;
      I0 = 1; I1 = 1; I2 = 0; I3 = 1;
      #5;
      I0 = 1; I1 = 1; I2 = 1; I3 = 0;
      #5;
      I0 = 1; I1 = 1; I2 = 1; I3 = 1;
      #5;
      $finish;
```

```
end

main dut(
    .I0(I0),
    .I1(I1),
    .I2(I2),
    .I3(I3),
    .O(O)
);

`ifdef VERILATE
        initial begin
                $dumpfile({`TOP_DIR,"/Testbench.vcd"});
                $dumpvars(0,dut);
                $dumpon;
        end
`endif

endmodule
```

- **代码解释**
  - 在initial块里给reg寄存器赋值，由于有四个输入，需要进行十四组测试
  - 延迟五个单位延迟 5 个时间单位是为了让 I0 I1 I2 I3 在给定输入下的输出可以维持 5 个单位的固定电平，便于通过波形观察 O 的输出电平。如果立刻修改输出会导致 O 的值立刻变换，使得上一组输入对应的输出无法观察得到。
- **仿真截图**

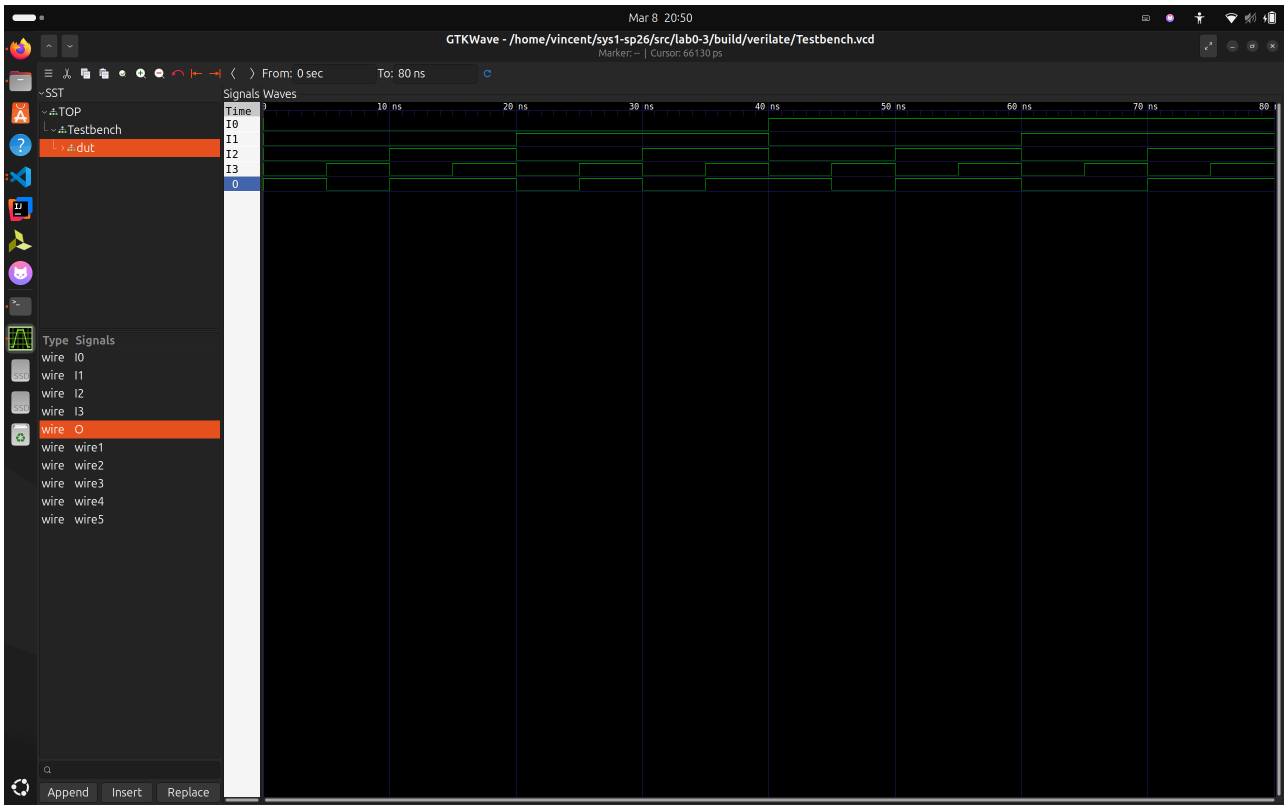
Mar 8 20:50
GTKWave - /home/vincent/sys1-sp26/src/lab0-3/build/verilate/Testbench.vcd
From: 0 sec
To: 80 ns
SST
TOP
Testbench
dut
Signals Waves
Time
I0
I1
I2
I3
O
10 ns
20 ns
30 ns
40 ns
50 ns
60 ns
70 ns
Type Signals
wire I0
wire I1
wire I2
wire I3
wire O
wire wire1
wire wire2
wire wire3
wire wire4
wire wire5
Append
Insert
Replace

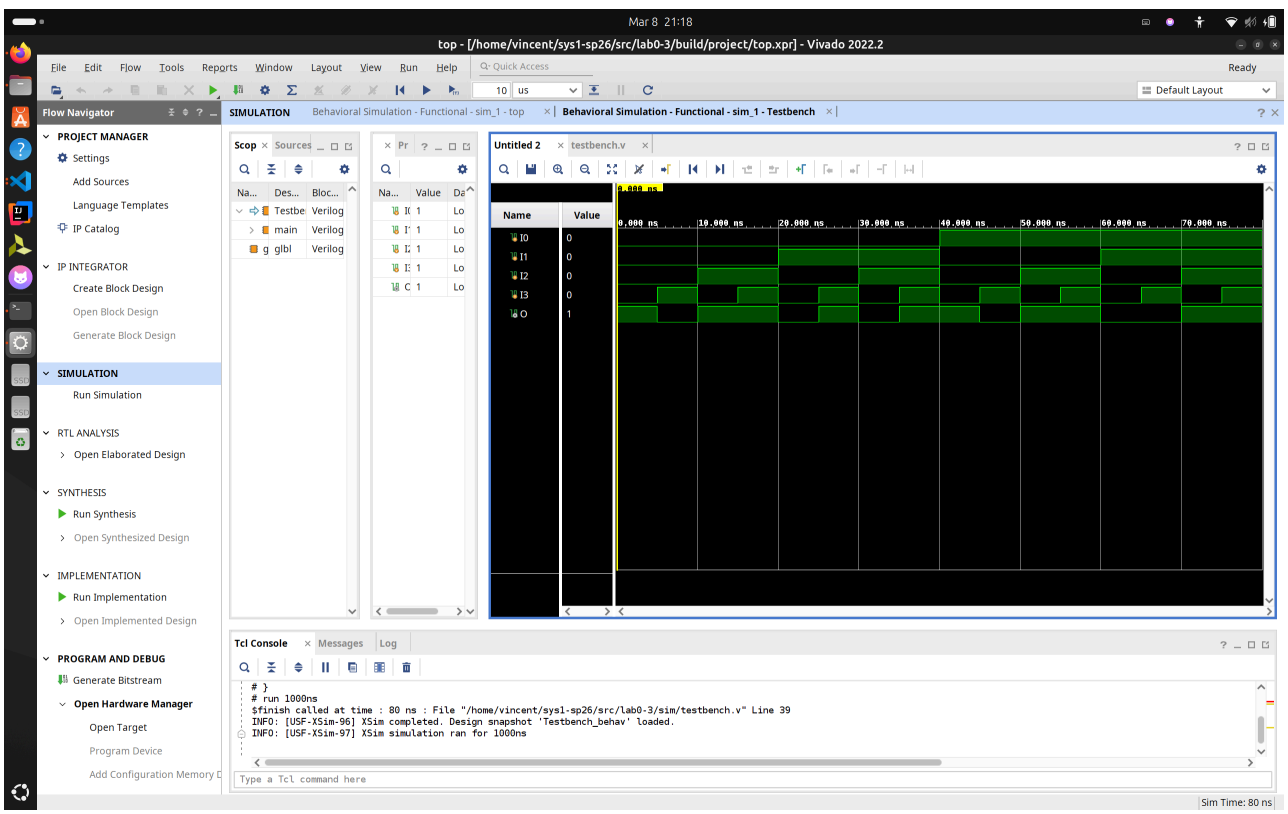
Mar 8 21:18
top - [/home/vincent/sys1-sp26/src/lab0-3/build/project/top.xpr] - Vivado 2022.2
File
Edit
Flow
Tools
Reports
Window
Layout
View
Run
Help
Quick Access
Ready
Default Layout
Flow Navigator
PROJECT MANAGER
Settings
Add Sources
Language Templates
IP Catalog
IP INTEGRATOR
Create Block Design
Open Block Design
Generate Block Design
SIMULATION
Run Simulation
RTL ANALYSIS
Open Elaborated Design
SYNTHESIS
Run Synthesis
Open Synthesized Design
IMPLEMENTATION
Run Implementation
Open Implemented Design
PROGRAM AND DEBUG
Generate Bitstream
Open Hardware Manager
Open Target
Program Device
Add Configuration Memory D
SIMULATION
Behavioral Simulation - Functional - sim_1 - top
Behavioral Simulation - Functional - sim_1 - Testbench
Untitled 2
testbench.v
Name
Value
I0
I1
I2
I3
O
10.000 ns
20.000 ns
30.000 ns
40.000 ns
50.000 ns
60.000 ns
70.000 ns
Tcl Console
Messages
Log
}
run 1000ns
$finish called at time : 80 ns : File "/home/vincent/sys1-sp26/src/lab0-3/sim/testbench.v" Line 39
INFO: [USF-XSim-96] XSim completed. Design snapshot 'Testbench_behav' loaded.
INFO: [USF-XSim-97] XSim simulation ran for 1000ns
Type a Tcl command here
Sim Time: 80 ns