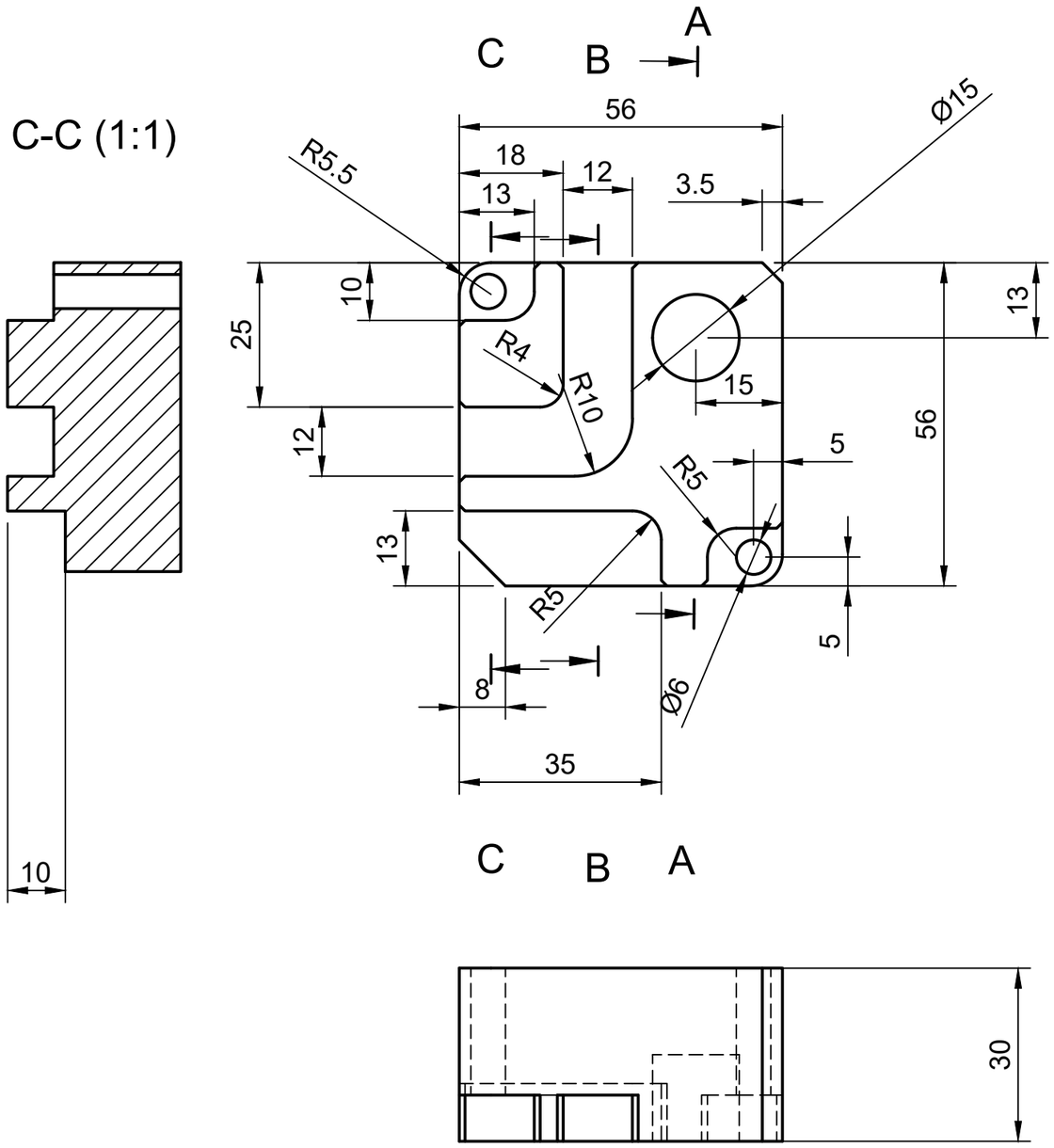

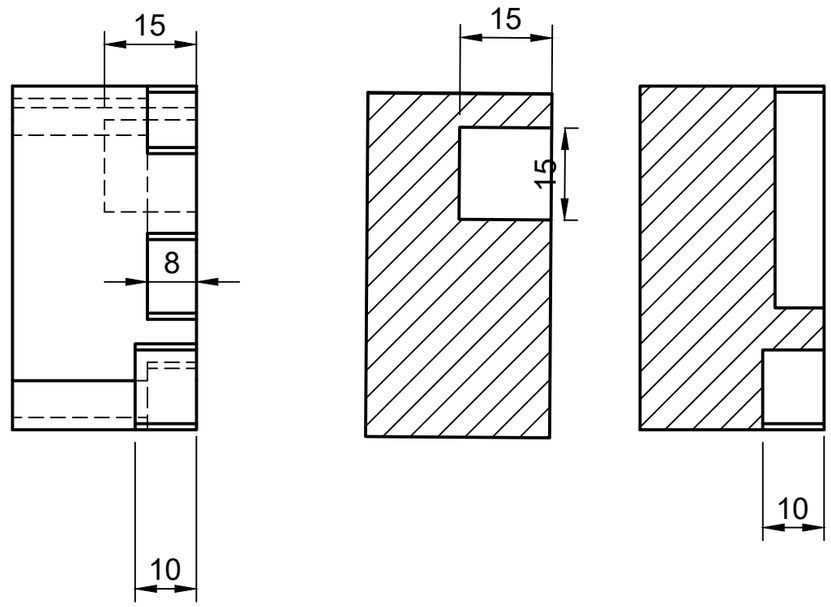

SMUSSI 1X45

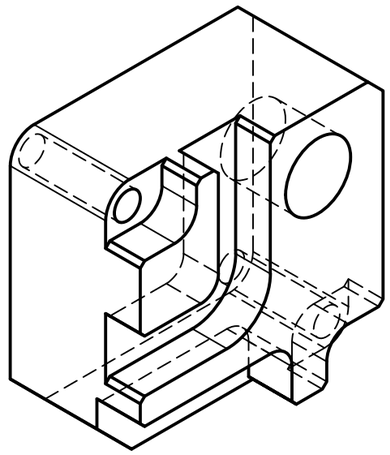

Dept.	Technical reference	Created by Alessandro Marchetto 24/10/2022	Approved by
		Document type	Document status
		Title PROVA PRATICA	DWG No.
			Rev. / Date of issue / Sheet 1/1