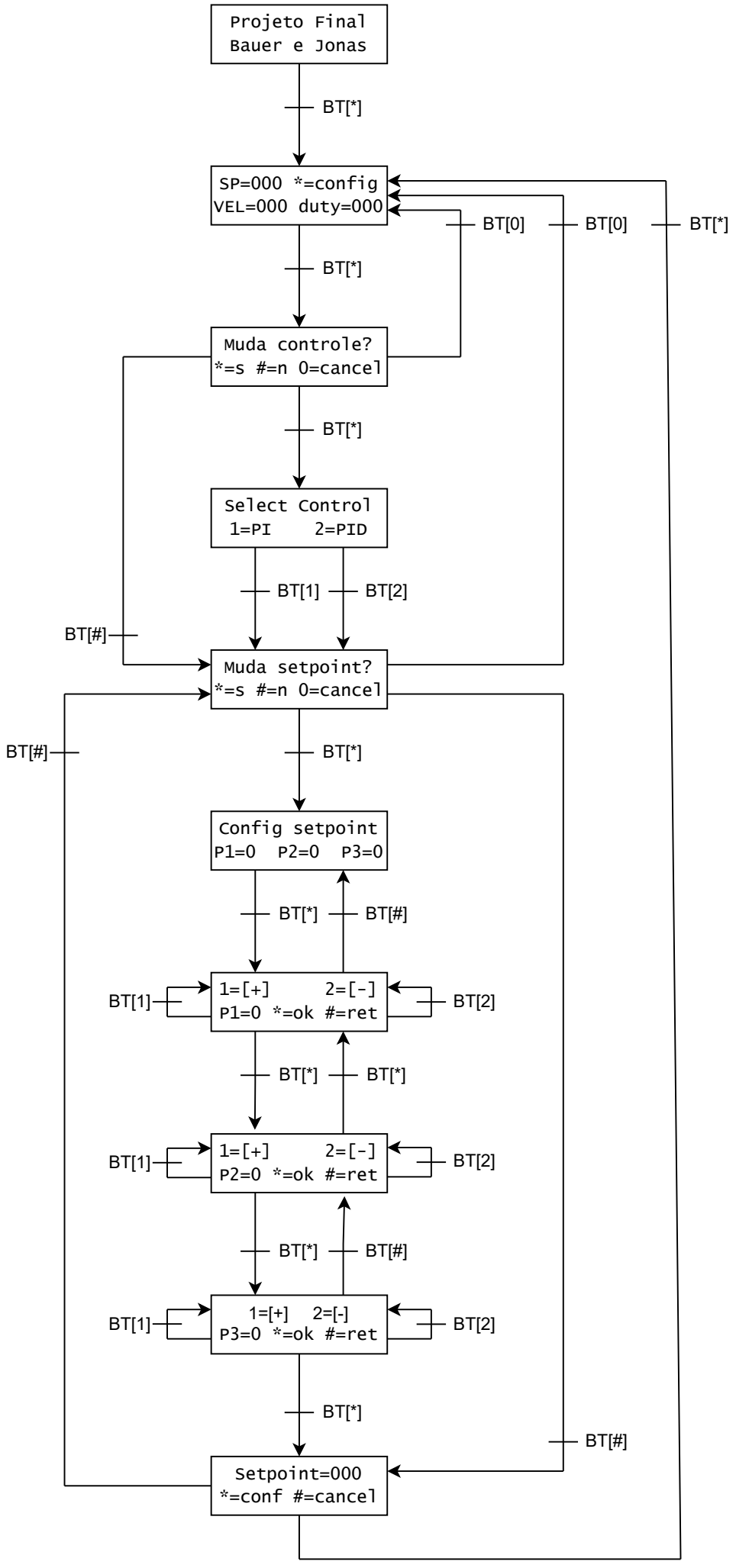
Projeto Final
Bauer e Jonas
BT[*]
SP=000 *=config
VEL=000 duty=000
BT[0]
BT[0]
BT[*]
BT[*]
Muda controle?
*=s #=n 0=cancel
BT[*]
Select Control
1=PI 2=PID
BT[1]
BT[2]
BT[#]
Muda setpoint?
*=s #=n 0=cancel
BT[#]
BT[*]
Config setpoint
P1=0 P2=0 P3=0
BT[*]
BT[#]
BT[1]
1=[+] 2=[-]
P1=0 *=ok #=ret
BT[2]
BT[*]
BT[*]
BT[1]
1=[+] 2=[-]
P2=0 *=ok #=ret
BT[2]
BT[*]
BT[#]
BT[1]
1=[+] 2=[-]
P3=0 *=ok #=ret
BT[2]
BT[*]
BT[#]
Setpoint=000
*=conf #=cancel