AWS Solution Architect Training with
AWS Cloud Practitioner Global Certification

Capstone Projects

Trainer: Aravindraj.G- Nminds Academy

AWS Academy Certified Educator

4.Create an EC2 Linux Instance in AWS

Vinith Kumar D

CSE-Artificial Intelligence & Machine Learning, Sri Eshwar College of Engineering,

Coimbatore

.

Objective

EC2 (Elastic Compute Cloud) is a core service provided by Amazon Web Services (AWS) that enables users to rent virtual servers in the cloud to run applications, store data, or handle computational workloads.

An EC2 Linux instance is a virtual machine running the Linux operating system on Amazon Web Services (AWS) EC2 (Elastic Compute Cloud). This allows you to run Windows-based applications, manage Windows Server configurations, and use various Microsoft software (like SQL Server, Apache,FileServer etc.) in the cloud without having to manage physical hardware.

Use Cases for EC2 Linux Instances:

- Web and Application Hosting: Run Apache web servers or other Linux-based web applications in the cloud.
- Database Servers: Host SQL Server databases with EC2 Linux instances, using SSH or EC2 for more control.
- Remote Desktop Applications: Set up SSH (Remote Desktop Services) for remote access to Linux desktops in the cloud.
- Development and Testing: Create development environments with linux OS to test php,MySql or other Linux-based applications.

Used Services in AWS

Amazon EC2

Topology :

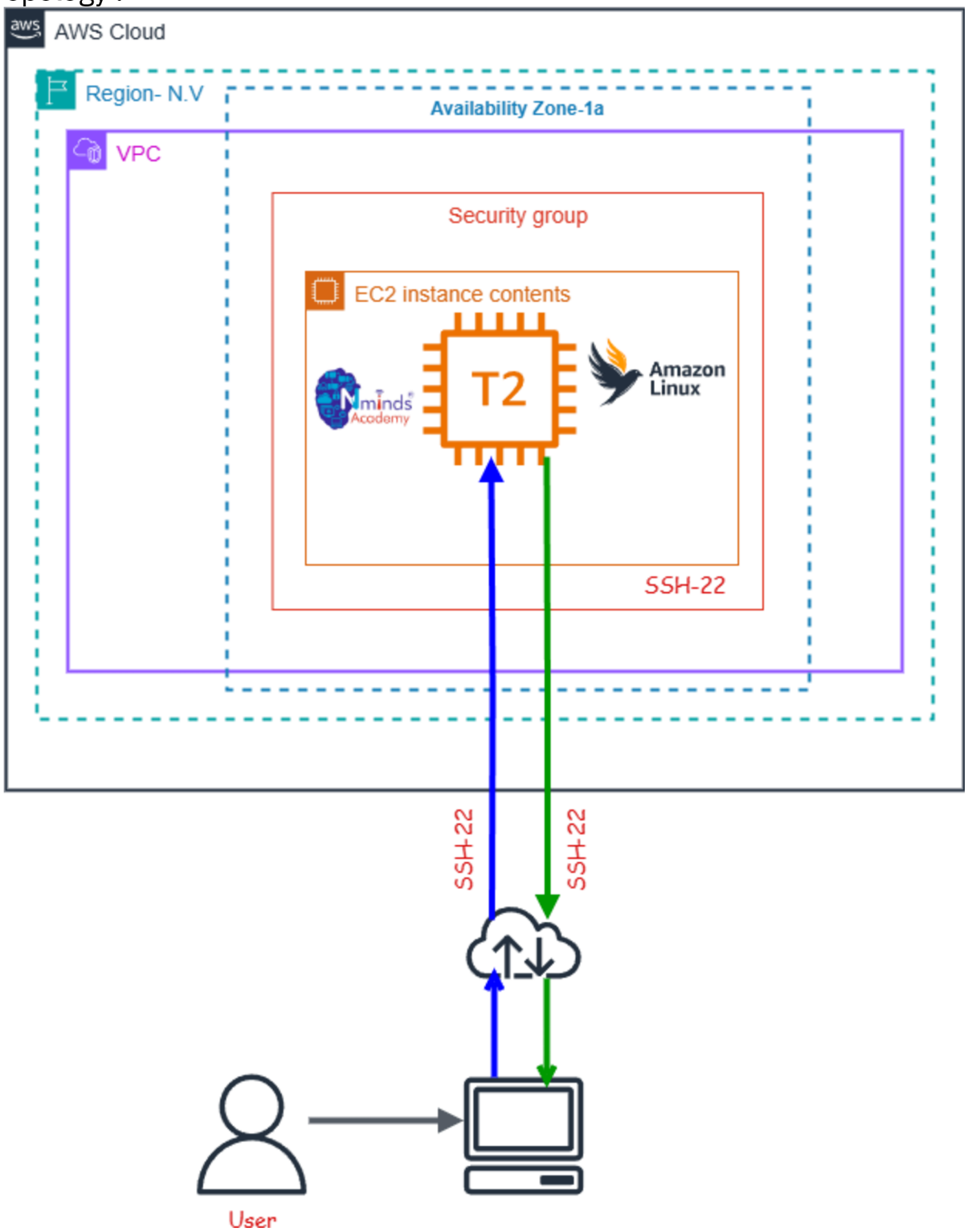
AWS Cloud
Region- N.V
Availability Zone-1a
VPC
Security group
EC2 instance contents
T2
Amazon Linux
SSH-22
SSH-22
SSH-22
User

```
(c) Microsoft Corporation. All rights reserved.

C:\Users\vinith kumar>cd Downloads

C:\Users\vinith kumar\Downloads>ssh -i boat.pem ec2-user@13.62.228.240
The authenticity of host '13.62.228.240 (13.62.228.240)' can't be established.
ED25519 key fingerprint is SHA256:SseO/jCRctN4miGqEKrCODreYR9Tl7yrtU1N6iGi7Nw.
This key is not known by any other names.
Are you sure you want to continue connecting (yes/no/[fingerprint])? yes
Warning: Permanently added '13.62.228.240' (ED25519) to the list of known hosts.
       #_
   ~\_  ####_        Amazon Linux 2023
  ~~  \_#####\
  ~~     \###|
  ~~       \#/ ___   https://aws.amazon.com/linux/amazon-linux-2023
   ~~       V~' '->
    ~~~         /
      ~~._.   _/
         _/ _/
       _/m/'
[ec2-user@ip-172-31-17-156 ~]$ sudo -i
[root@ip-172-31-17-156 ~]#
```