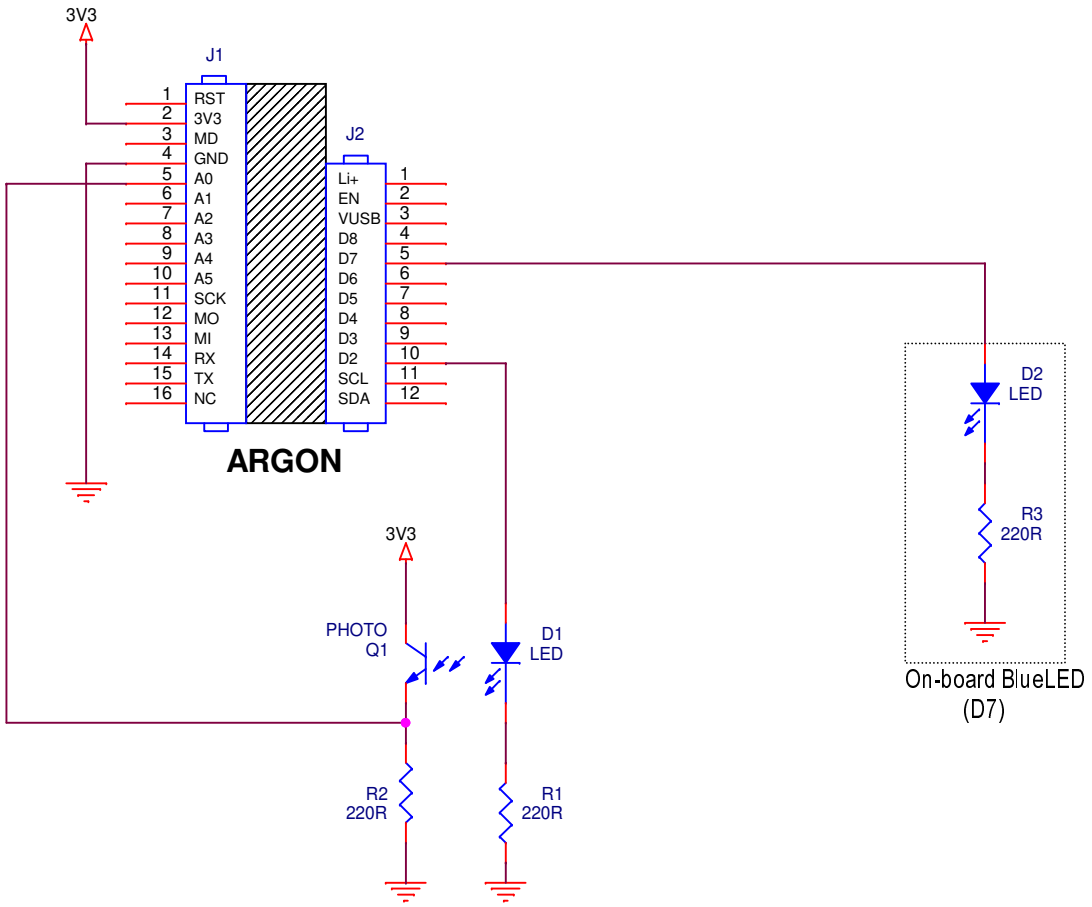


| | | |
|---|---|---|
| Title | Particle Project, Photo Sensor | |
| Size A | Document Number | Rev 1 |
| Date: Thursday, September 03, 2020 | Sheet 1 of 1 | |