XMOS

File: xmos_avb_brd_V4_1.kicad_sch

Power supplies & Reset

File: xmos_avb_brd_V4_2.kicad_sch

Ethernet

File: xmos_avb_brd_V4_3.kicad_sch

Audio Clocking

File: xmos_avb_brd_V4_4.kicad_sch

Sheet: /
File: xmos_avb_brd_V4.kicad_sch

Title:

Size: A4	Date:	**Rev:**
KiCad E.D.A. 9.0.5		Id: 1/5

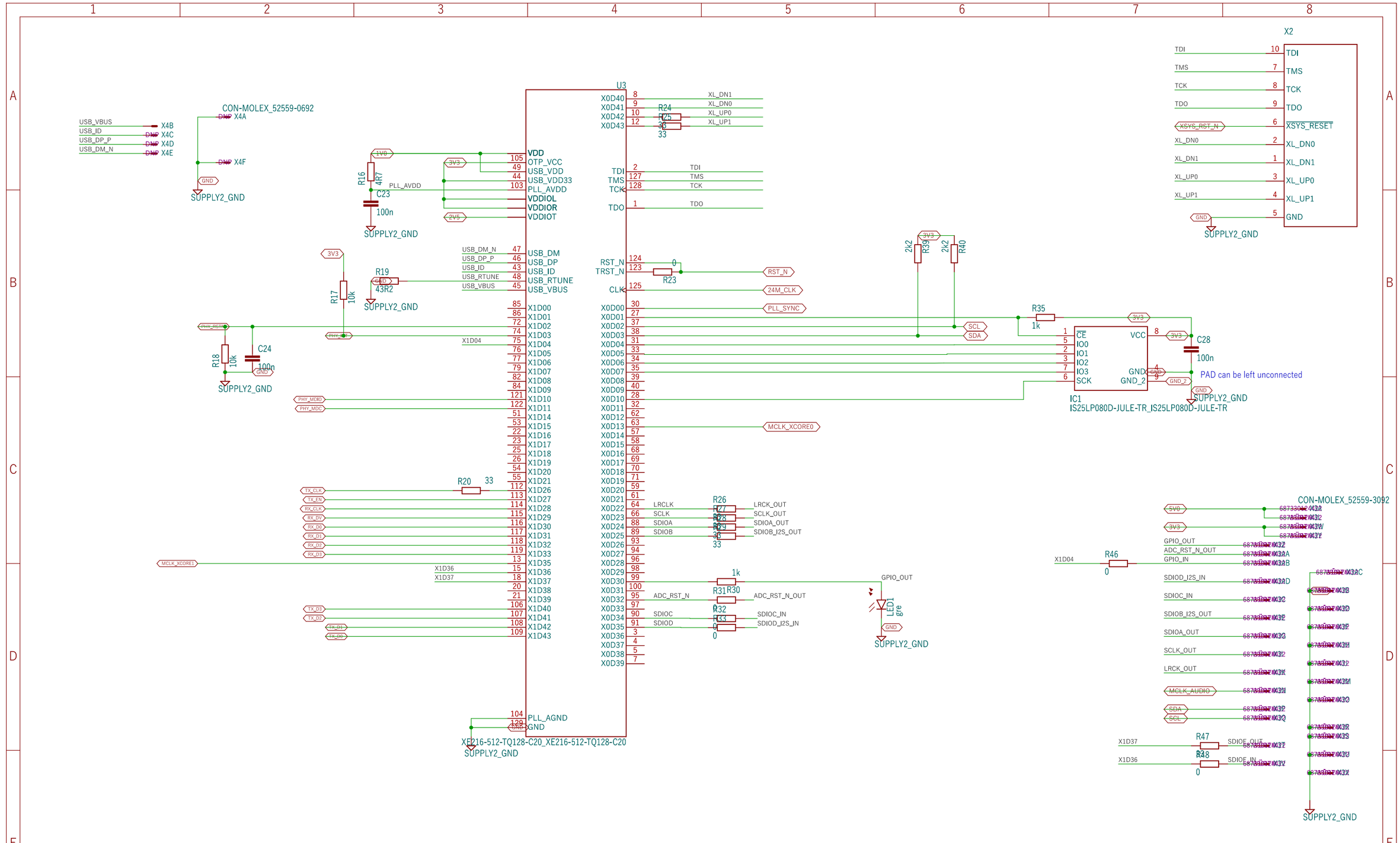
U3
XE216-512-TQ128-C20_XE216-512-TQ128-C20
CON-MOLEX_52559-0692
X2
CON-MOLEX_52559-3092
IC1
IS25LP080D-JULE-TR_IS25LP080D-JULE-TR
PAD can be left unconnected
SUPPLY2_GND
VDD
OTP_VCC
USB_VDD
USB_VDD33
PLL_AVDD
VDDIOL
VDDIOR
VDDIOT
USB_DM
USB_DP
USB_ID
USB_RTUNE
USB_VBUS
PLL_AGND
GND
XL_DN1
XL_DN0
XL_UP0
XL_UP1
TDI
TMS
TCK
TDO
RST_N
TRST_N
CLK
24M_CLK
PLL_SYNC
SCL
SDA
MCLK_XCORE0
MCLK_XCORE1
LRCLK
SCLK
SDIOA
SDIOB
LRCK_OUT
SCLK_OUT
SDIOA_OUT
SDIOB_I2S_OUT
ADC_RST_N
ADC_RST_N_OUT
SDIOC
SDIOD
SDIOC_IN
SDIOD_I2S_IN
GPIO_OUT
LED1
GPIO_IN
SDIOD_I2S_IN
SDIOC_IN
SDIOB_I2S_OUT
SDIOA_OUT
MCLK_AUDIO
SDIOE_OUT
SDIOE_IN
XSYS_RST_N
XSYS_RESET
TX_CLK
TX_EN
RX_CLK
RX_DV
RX_D0
RX_D1
RX_D2
RX_D3
TX_D3
TX_D2
TX_D1
TX_D0
PHY_RST
PHY_IRQ
PHY_MDIO
PHY_MDC
X1D04
X1D36
X1D37
USB_VBUS
USB_ID
USB_DP_P
USB_DM_N
X4A
X4B
X4C
X4D
X4E
X4F
R16 4R7
C23 100n
R17 10k
R18 10k
C24 100n
R19 43R2
R20 33
R23 0
R24 33
R25 33
R26 33
R27 33
R28 33
R29 33
R30 1k
R31 1k
R32 0
R33 0
R35 1k
R39 2k2
R40 2k2
C28 100n
R46 0
R47 0
R48 0
1V0
2V5
3V3
5V0
GND
xmos_avb_brd_V4
2026-02-21
Sheet: /XMOS/
File: xmos_avb_brd_V4_1.kicad_sch
Sheet: 1/5
Title:
Size: User
Date:
Rev:
KiCad E.D.A. 9.0.5
Id: 1/5

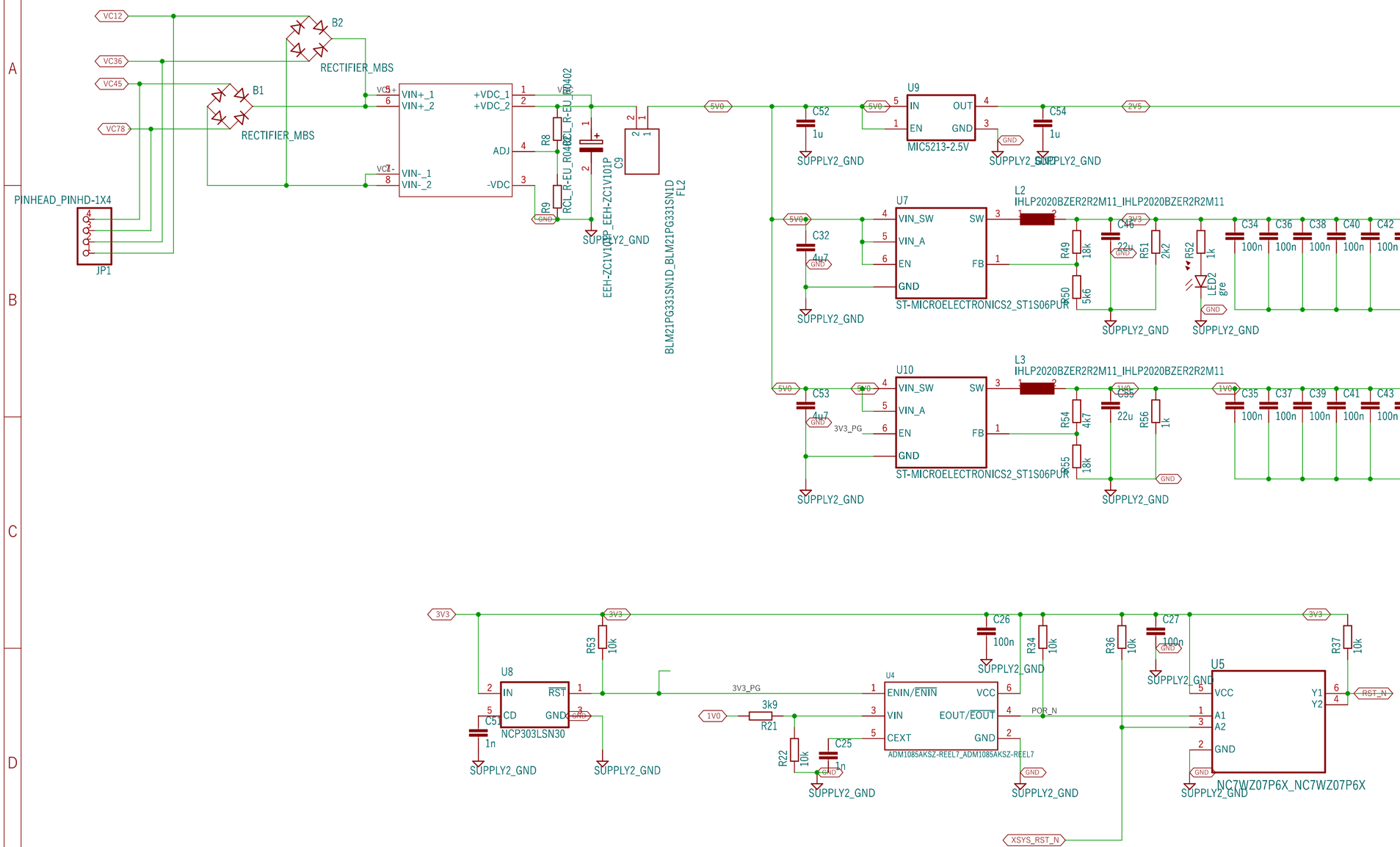

	xmos_avb_brd_V4
	2026-02-21
Sheet: /Power supplies & Reset/ File: xmos_avb_brd_V4_2.kicad_sch	Sheet: 2/5

Title:		
Size: User	Date:	Rev:
KiCad E.D.A. 9.0.5		Id: 2/5

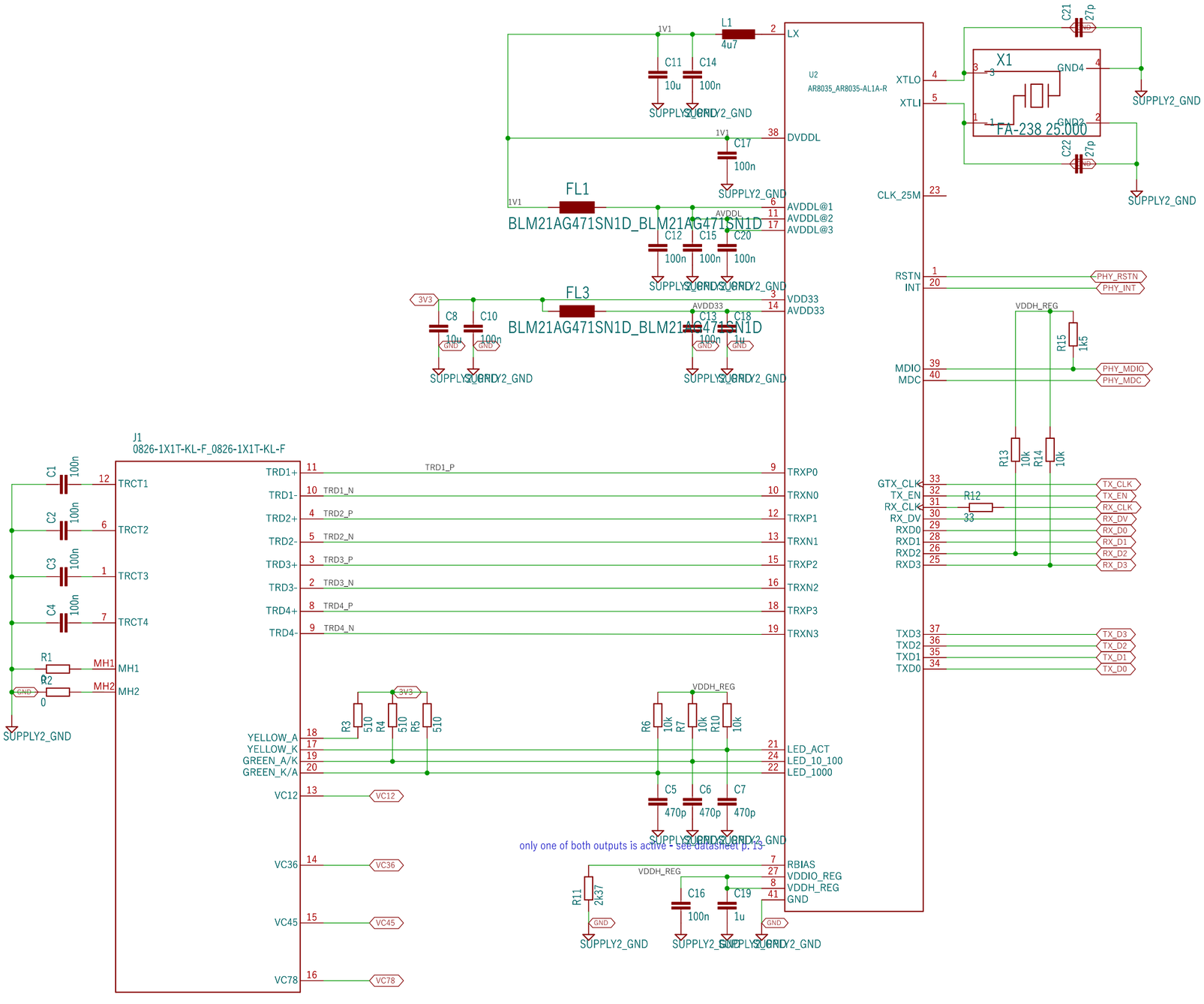

xmos_avb_brd_V4	
2026-02-21	
Sheet: /Ethernet/ File: xmos_avb_brd_V4_3.kicad_sch	Sheet: 3/5

Title:

Size: User | Date: | Rev:

KiCad E.D.A. 9.0.5 | Id: 3/5

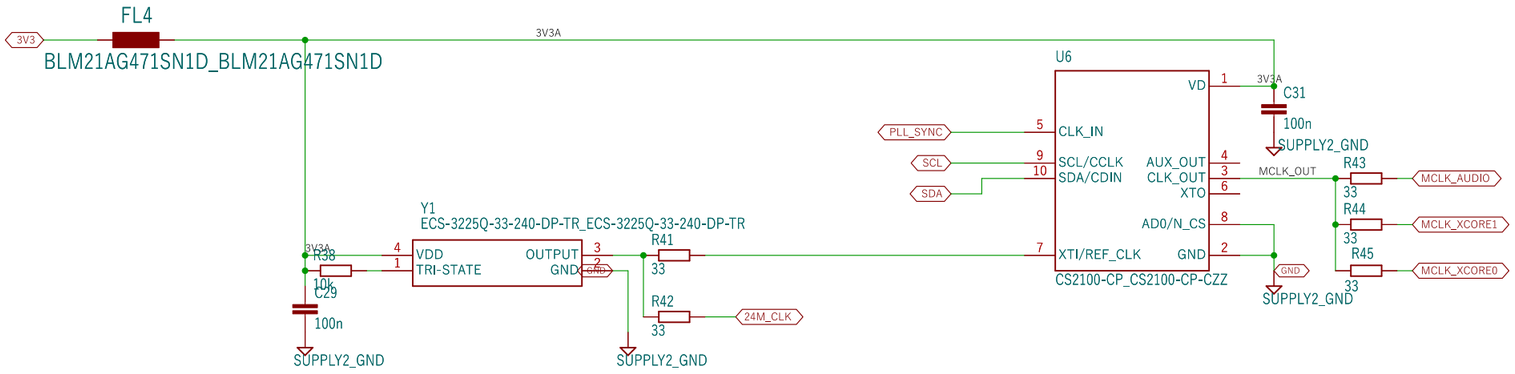

	xmos_avb_brd_V4
	2026-02-21
Sheet: /Audio Clocking/ File: xmos_avb_brd_V4_4.kicad_sch	Sheet: 4/5
Title:	
Size: User	Date:
KiCad E.D.A. 9.0.5	Rev: Id: 4/5