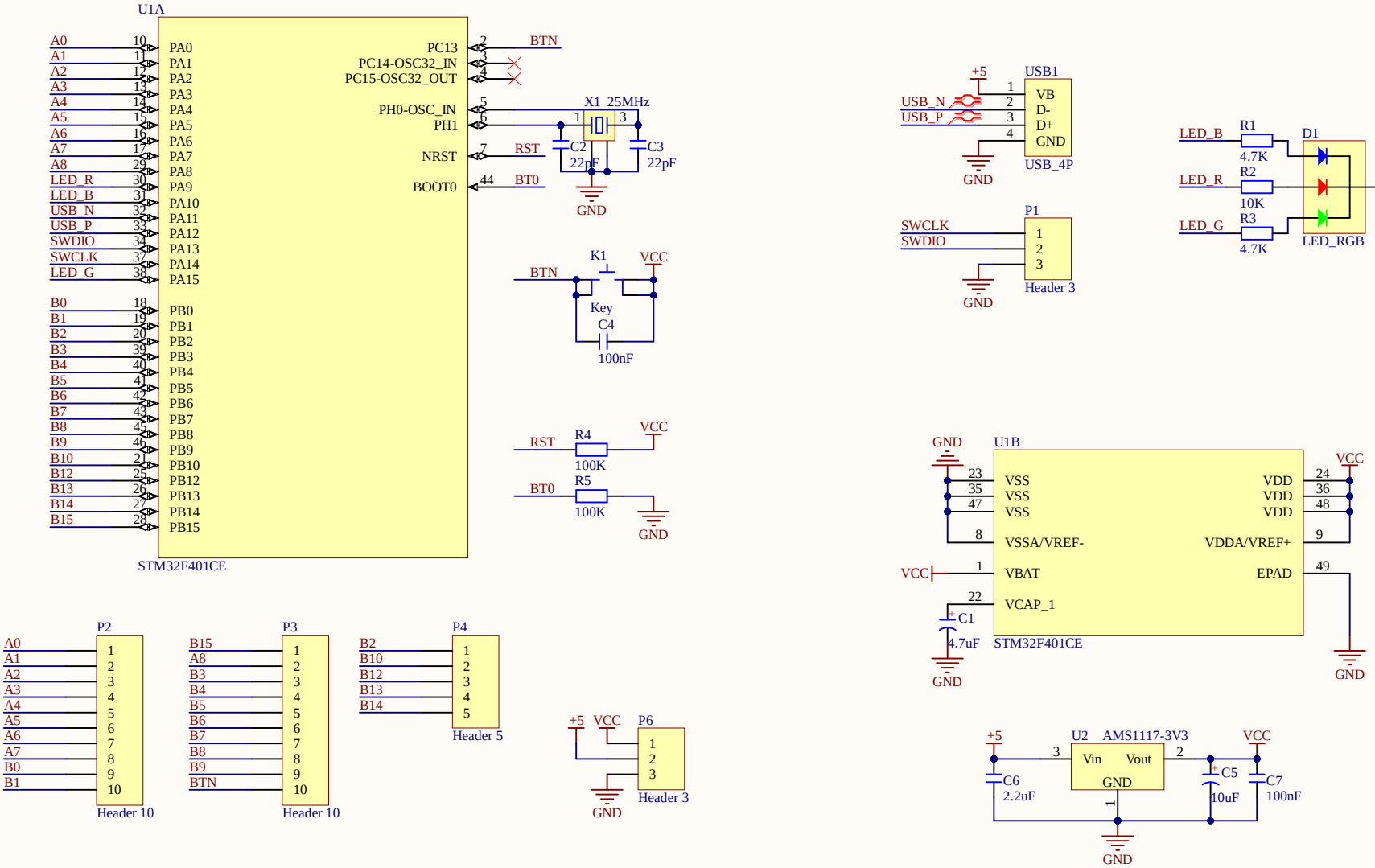

Title		
Size A4	Number	Revision
Date: 9/16/2020		Sheet of
File: D:\SThuMb32\..\SThuMb32.SchDoc		Drawn By: