CHAPTER

30

ICE AND RAIN PROTECTION

CHAPTER 30
ICE AND RAIN PROTECTION

Subject/Page	Date	COC
30-EFFECTIVE PAGES		
1 thru 5	Feb 15/2025	
6	BLANK	
30-CONTENTS		
1	Feb 15/2021	
2	Feb 15/2021	
3	Feb 15/2024	
4	Jun 15/2021	
5	Oct 15/2024	
6	Oct 15/2024	
7	Oct 15/2024	
8	Feb 15/2024	
9	Oct 15/2023	
10	Oct 15/2023	
30-00-00		
901	Feb 15/2021	
902	Feb 15/2021	
903	Feb 15/2021	
904	Feb 15/2021	
905	Feb 15/2021	
906	Feb 15/2021	
907	Feb 15/2021	
908	Feb 15/2021	
909	Feb 15/2021	
910	Feb 15/2021	
911	Feb 15/2021	
912	Feb 15/2021	
913	Feb 15/2022	
914	Feb 15/2024	
915	Oct 15/2023	
R 916	Feb 15/2025	
917	Feb 15/2021	
918	Feb 15/2021	
919	Feb 15/2022	
920	Feb 15/2022	
921	Feb 15/2021	
922	Feb 15/2021	
30-00-00 (cont)		
923	Feb 15/2021	
924	Jun 15/2021	
925	Feb 15/2022	
R 926	Feb 15/2025	
927	Feb 15/2021	
928	Feb 15/2021	
929	Feb 15/2021	
930	Feb 15/2022	
931	Feb 15/2021	
932	Jun 15/2022	
933	Jun 15/2022	
934	BLANK	
30-11-00		
201	Feb 15/2015	
202	Feb 15/2015	
203	Oct 15/2015	
204	Feb 15/2015	
30-11-00		
R 501	Feb 15/2025	
R 502	Feb 15/2025	
503	Jun 15/2024	
504	Jun 15/2024	
R 505	Feb 15/2025	
506	Oct 15/2015	
507	Jun 15/2024	
508	Jun 15/2024	
509	Jun 15/2024	
510	BLANK	
30-11-11		
401	Feb 15/2021	
402	Jun 15/2015	
403	Oct 15/2015	
404	Oct 15/2024	
405	Oct 15/2024	
406	Oct 15/2022	
30-11-11		
501	Oct 15/2020	
502	Oct 15/2020	
503	Jun 15/2015	
504	Oct 15/2015	
30-11-12		
R 401	Feb 15/2025	
O 402	Feb 15/2025	
403	Oct 15/2015	
404	Feb 15/2023	
405	Jun 15/2023	
406	Feb 15/2023	
30-11-12		
R 501	Feb 15/2025	
502	Feb 15/2023	
R 503	Feb 15/2025	
504	Feb 15/2023	
505	Feb 15/2023	
506	Feb 15/2023	
30-11-21		
R 401	Feb 15/2025	
O 402	Feb 15/2025	
403	Oct 15/2015	
R 404	Feb 15/2025	
R 405	Feb 15/2025	
406	BLANK	
30-11-31		
401	Oct 15/2014	
402	Jun 15/2022	
403	Oct 15/2017	
404	Feb 15/2024	
405	Feb 15/2024	
406	Feb 15/2024	
407	Feb 15/2024	
408	Oct 15/2024	
409	Feb 15/2024	
410	Feb 15/2024	
411	Feb 15/2024	

A = Added, R = Revised, D = Deleted, O = Overflow, C = Customer Originated Change

30-EFFECTIVE PAGES

ECCN 9E991 BOEING PROPRIETARY - See title page for details

Subject/Page	Date	COC
30-11-31 (cont)		
412	Feb 15/2024	
413	Feb 15/2024	
414	Feb 15/2024	
415	Feb 15/2024	
416	Feb 15/2024	
417	Feb 15/2024	
418	Feb 15/2024	
419	Feb 15/2024	
420	Feb 15/2024	
421	Feb 15/2024	
422	Oct 15/2024	
423	Feb 15/2024	
424	Feb 15/2024	
425	Feb 15/2024	
426	Feb 15/2024	
30-11-31		
601	Feb 15/2024	
602	Feb 15/2024	
603	Feb 15/2018	
604	Oct 15/2015	
30-11-41		
401	Oct 15/2017	
402	Oct 15/2017	
403	Oct 15/2015	
404	Oct 15/2024	
405	Jun 15/2018	
406	BLANK	
30-11-41		
501	Feb 15/2020	
502	Feb 15/2020	
503	Feb 15/2020	
504	Oct 15/2020	
505	Oct 15/2015	
506	Oct 15/2015	
30-21-00		
501	Jun 15/2024	
502	Jun 15/2024	
30-21-00 (cont)		
503	Jun 15/2024	
504	Jun 15/2024	
505	Jun 15/2024	
506	Oct 15/2021	
507	Oct 15/2021	
508	BLANK	
30-21-11		
R 401	Feb 15/2025	
R 402	Feb 15/2025	
403	Jun 15/2021	
404	Feb 15/2023	
405	Jun 15/2021	
406	Jun 15/2021	
407	Jun 15/2021	
408	Feb 15/2023	
R 409	Feb 15/2025	
O 410	Feb 15/2025	
R 411	Feb 15/2025	
R 412	Feb 15/2025	
R 413	Feb 15/2025	
R 414	Feb 15/2025	
30-21-11		
701	Feb 15/2022	
702	Feb 15/2019	
703	Feb 15/2019	
704	Jun 15/2016	
30-21-21		
401	Oct 15/2021	
402	Oct 15/2021	
403	Oct 15/2020	
404	Oct 15/2021	
405	Oct 15/2021	
406	Oct 15/2021	
30-31-00		
201	Feb 15/2022	
202	Jun 15/2023	
203	Oct 15/2024	
30-31-00 (cont)		
204	Oct 15/2024	
205	Oct 15/2024	
206	BLANK	
30-31-00		
501	Oct 15/2024	
502	Oct 15/2024	
503	Oct 15/2024	
504	Oct 15/2024	
505	Jun 15/2023	
506	Oct 15/2024	
507	Oct 15/2024	
508	Oct 15/2021	
509	Oct 15/2024	
510	Oct 15/2021	
511	Jun 15/2023	
512	Feb 15/2021	
513	Oct 15/2024	
514	Oct 15/2024	
30-41-00		
201	Oct 15/2024	
202	Oct 15/2024	
203	Oct 15/2024	
204	Oct 15/2024	
30-41-00		
501	Feb 15/2024	
502	Oct 15/2024	
503	Oct 15/2024	
504	Feb 15/2024	
505	Oct 15/2024	
506	Oct 15/2024	
507	Feb 15/2019	
508	Oct 15/2024	
509	Jun 15/2018	
510	BLANK	
30-41-00		
601	Oct 15/2024	
602	Oct 15/2024	

A = Added, R = Revised, D = Deleted, O = Overflow, C = Customer Originated Change

30-EFFECTIVE PAGES

ECCN 9E991 BOEING PROPRIETARY - See title page for details

CHAPTER 30
ICE AND RAIN PROTECTION

Subject/Page	Date	COC
30-41-00 (cont)		
603	Oct 15/2024	
604	Oct 15/2024	
605	Oct 15/2018	
606	Oct 15/2024	
607	Oct 15/2018	
608	BLANK	
30-41-00		
801	Oct 15/2024	
802	Oct 15/2024	
803	Oct 15/2024	
804	Oct 15/2024	
805	Feb 15/2024	
806	Feb 15/2024	
30-41-11		
201	Feb 15/2023	
202	Feb 15/2023	
203	Feb 15/2023	
204	BLANK	
30-41-11		
401	Oct 15/2024	
402	Oct 15/2024	
403	Oct 15/2024	
404	Oct 15/2024	
405	Oct 15/2024	
406	Oct 15/2024	
407	Oct 15/2024	
408	Oct 15/2024	
409	Feb 15/2019	
410	Jun 15/2019	
411	Jun 15/2018	
412	Oct 15/2023	
413	Oct 15/2019	
414	BLANK	
30-41-11		
R 501	Feb 15/2025	
502	Oct 15/2024	
R 503	Feb 15/2025	
30-41-11 (cont)		
504	Jun 15/2023	
505	Oct 15/2024	
506	Jun 15/2019	
507	Oct 15/2024	
508	Oct 15/2024	
509	Feb 15/2019	
510	BLANK	
30-41-21		
501	Oct 15/2024	
502	Oct 15/2024	
503	Oct 15/2024	
504	Oct 15/2024	
505	Oct 15/2024	
506	Oct 15/2024	
507	Oct 15/2024	
508	Oct 15/2024	
509	Oct 15/2024	
510	Oct 15/2024	
511	Oct 15/2024	
512	Oct 15/2024	
513	Oct 15/2023	
514	Oct 15/2023	
515	Feb 15/2024	
516	Feb 15/2024	
517	Feb 15/2024	
518	Feb 15/2024	
519	Oct 15/2023	
520	Jun 15/2024	
521	Jun 15/2024	
522	Oct 15/2023	
523	Oct 15/2023	
524	Jun 15/2024	
525	Jun 15/2024	
526	Oct 15/2023	
527	Oct 15/2023	
528	Oct 15/2023	
30-41-21 (cont)		
529	Oct 15/2023	
530	Oct 15/2023	
531	Oct 15/2024	
532	Oct 15/2024	
533	Oct 15/2024	
534	Oct 15/2024	
535	Oct 15/2024	
536	Oct 15/2024	
537	Oct 15/2024	
538	Oct 15/2024	
539	Oct 15/2024	
540	Oct 15/2024	
541	Oct 15/2024	
542	Oct 15/2024	
543	Oct 15/2023	
544	Oct 15/2024	
545	Oct 15/2023	
546	BLANK	
30-41-31		
401	Nov 15/2022	
402	Nov 15/2022	
403	Feb 15/2020	
404	Nov 15/2022	
405	Jun 15/2024	
406	Jun 15/2024	
407	Jun 15/2024	
408	Jun 15/2024	
30-41-41		
401	Oct 15/2024	
402	Nov 15/2022	
403	Oct 15/2017	
404	Oct 15/2017	
405	Jun 15/2018	
406	Oct 15/2024	
407	Oct 15/2024	
408	Oct 15/2024	

A = Added, R = Revised, D = Deleted, O = Overflow, C = Customer Originated Change

30-EFFECTIVE PAGES

ECCN 9E991 BOEING PROPRIETARY - See title page for details

CHAPTER 30
ICE AND RAIN PROTECTION

Subject/Page	Date	COC
30-42-00		
201	Oct 15/2024	
202	Jun 15/2018	
203	Oct 15/2015	
204	Oct 15/2024	
30-42-00		
501	Oct 15/2024	
502	Oct 15/2023	
503	Oct 15/2024	
504	Oct 15/2023	
505	Oct 15/2023	
506	BLANK	
30-42-11		
401	Oct 15/2024	
402	Oct 15/2024	
403	Feb 15/2024	
404	Feb 15/2024	
405	Feb 15/2024	
406	Oct 15/2024	
407	Feb 15/2024	
408	BLANK	
30-42-11		
601	Oct 15/2023	
602	Oct 15/2023	
603	Oct 15/2023	
604	Oct 15/2023	
605	Feb 15/2022	
606	BLANK	
30-42-21		
R 401	Feb 15/2025	
402	Oct 15/2024	
403	Oct 15/2021	
404	Oct 15/2021	
405	Feb 15/2016	
406	Feb 15/2016	
R 407	Feb 15/2025	
R 408	Feb 15/2025	
R 409	Feb 15/2025	
30-42-21 (cont)		
O 410	Feb 15/2025	
30-42-31		
201	Oct 15/2024	
202	Feb 15/2023	
203	Oct 15/2024	
204	Feb 15/2023	
205	Feb 15/2023	
206	Feb 15/2023	
207	Oct 15/2024	
208	Oct 15/2024	
209	Oct 15/2024	
210	Oct 15/2024	
211	Oct 15/2024	
212	Oct 15/2024	
213	Oct 15/2024	
214	Feb 15/2023	
215	Oct 15/2024	
216	Feb 15/2023	
217	Feb 15/2023	
218	Feb 15/2023	
219	Oct 15/2024	
220	Feb 15/2023	
221	Oct 15/2024	
222	Oct 15/2024	
30-43-00		
201	Oct 15/2024	
202	Oct 15/2024	
203	Oct 15/2024	
204	BLANK	
30-71-00		
201	Oct 15/2017	
202	Feb 15/2024	
203	Oct 15/2024	
204	Oct 15/2024	
205	Oct 15/2015	
206	Oct 15/2015	
207	Oct 15/2015	
30-71-00 (cont)		
208	Oct 15/2017	
30-71-00		
501	Oct 15/2024	
502	Oct 15/2024	
503	Oct 15/2024	
504	Oct 15/2024	
505	Feb 15/2024	
506	Oct 15/2015	
507	Oct 15/2015	
508	Oct 15/2015	
30-71-01		
401	Feb 15/2024	
402	Oct 15/2024	
403	Oct 15/2015	
404	Oct 15/2015	
405	Feb 15/2024	
406	Oct 15/2024	
407	Feb 15/2024	
408	BLANK	
30-71-02		
401	Jun 15/2024	
402	Jun 15/2024	
403	Oct 15/2015	
404	Oct 15/2015	
405	Jun 15/2024	
406	Jun 15/2024	
30-71-03		
401	Oct 15/2023	
402	Oct 15/2024	
403	Oct 15/2017	
404	Oct 15/2024	
405	Oct 15/2023	
406	BLANK	
30-71-04		
401	Oct 15/2024	
402	Oct 15/2024	
403	Oct 15/2015	

A = Added, R = Revised, D = Deleted, O = Overflow, C = Customer Originated Change

30-EFFECTIVE PAGES

ECCN 9E991 BOEING PROPRIETARY - See title page for details

Subject/Page	Date	COC	Subject/Page	Date	COC	Subject/Page	Date	COC
30-71-04 (cont)								
404	Feb 15/2017							
405	Oct 15/2024							
406	Oct 15/2024							
30-71-05								
401	Jun 15/2019							
402	BLANK							
30-71-06								
401	Oct 15/2021							
402	Oct 15/2021							
403	Oct 15/2015							
404	Oct 15/2015							
405	Oct 15/2024							
406	Feb 15/2024							
407	Jun 15/2019							
408	BLANK							
30-81-00								
201	Oct 15/2021							
202	Oct 15/2021							
203	Oct 15/2021							
204	BLANK							
30-81-00								
501	Oct 15/2021							
502	Oct 15/2021							
503	Oct 15/2021							
504	BLANK							
30-81-01								
R 401	Feb 15/2025							
O 402	Feb 15/2025							
403	Oct 15/2021							
404	Jun 15/2022							
405	Feb 15/2022							
406	BLANK							
30-81-02								
401	Oct 15/2021							
402	Oct 15/2021							
403	Oct 15/2021							
404	BLANK							

A = Added, R = Revised, D = Deleted, O = Overflow, C = Customer Originated Change

30-EFFECTIVE PAGES

ECCN 9E991 BOEING PROPRIETARY - See title page for details

CHAPTER 30
ICE AND RAIN PROTECTION

SUBJECT	CHAPTER SECTION SUBJECT	CONF	PAGE	EFFECT
ICE AND RAIN PROTECTION - DDG MAINTENANCE PROCEDURES	30-00-00		901	LOM ALL
MMEL 30-01 (DDPG) Preparation - Wing Anti-Ice Valves Inoperative TASK 30-00-00-040-801			901	LOM ALL
MMEL 30-01 (DDPG) Restoration - Wing Anti-Ice Valves Inoperative TASK 30-00-00-440-801			909	LOM ALL
MMEL 30-02 (DDPG) Preparation - Wing Anti-Ice Valve Position Lights Inoperative TASK 30-00-00-040-802			911	LOM ALL
MMEL 30-02 (DDPG) Restoration - Wing Anti-Ice Valve Position Lights Inoperative TASK 30-00-00-440-802			912	LOM ALL
MMEL 30-03 (DDPG) Preparation - Engine and Nose Cowl Anti-Ice Valves Inoperative TASK 30-00-00-040-803			913	LOM ALL
MMEL 30-03 (DDPG) Restoration - Engine and Nose Cowl Anti-Ice Valves Inoperative TASK 30-00-00-440-803			919	LOM ALL
MMEL 30-09 (DDPG) Preparation - Pitot, Pitot/Static and Temperature Probe Heater Lights Inoperative TASK 30-00-00-040-805			921	LOM ALL
MMEL 30-09 (DDPG) Restoration - Pitot, Pitot/Static and Temperature Probe Heater Lights Inoperative TASK 30-00-00-440-805			921	LOM ALL
MMEL 30-13 (DDPG) Preparation - Windshield Wiper System Inoperative TASK 30-00-00-040-806			922	LOM ALL
MMEL 30-13 (DDPG) Restoration - Windshield Wiper System Inoperative TASK 30-00-00-440-806			923	LOM ALL
MMEL 30-17 (DDPG) Preparation - Cowl Anti-Ice Lights Inoperative TASK 30-00-00-040-809			924	LOM ALL

ECCN 9E991 BOEING PROPRIETARY - See title page for details

SUBJECT	CHAPTER SECTION SUBJECT	CONF	PAGE	EFFECT
MMEL 30-17 (DDPG) Restoration - Cowl Anti-Ice Lights Inoperative TASK 30-00-00-440-809			929	LOM ALL
MMEL 30-18 (DDPG) Preparation - Alpha Vane Heater Light Inoperative TASK 30-00-00-040-807			931	LOM ALL
MMEL 30-18 (DDPG) Restoration - Alpha Vane Heater Light Inoperative TASK 30-00-00-440-807			931	LOM ALL
MMEL 30-19 (DDPG) Preparation - Drain Mast Heaters Inoperative TASK 30-00-00-040-808			932	LOM ALL
MMEL 30-19 (DDPG) Restoration - Drain Mast Heater Inoperative TASK 30-00-00-440-808			932	LOM ALL
WING THERMAL ANTI-ICING - MAINTENANCE PRACTICES	30-11-00		201	LOM ALL
Wing Thermal Anti-Icing - Deactivation TASK 30-11-00-040-801			201	LOM ALL
Wing Thermal Anti-Icing - Activation TASK 30-11-00-440-801			204	LOM ALL
WING THERMAL ANTI-ICING - ADJUSTMENT/TEST	30-11-00		501	LOM ALL
Wing Anti-Ice - Operational Test TASK 30-11-00-710-801			501	LOM ALL
Wing Anti-Icing Duct - Leak Test TASK 30-11-00-790-801			508	LOM ALL
WING THERMAL ANTI-ICING SHUTOFF VALVE - REMOVAL/INSTALLATION	30-11-11		401	LOM ALL
Wing Thermal Anti-Icing Shutoff Valve Removal TASK 30-11-11-000-801			401	LOM ALL
Wing Thermal Anti-Icing Shutoff Valve Installation TASK 30-11-11-400-801			404	LOM ALL
WING THERMAL ANTI-ICING SHUTOFF VALVE - ADJUSTMENT/TEST	30-11-11		501	LOM ALL
Wing Thermal Anti Icing Shutoff Valve Test TASK 30-11-11-710-801			501	LOM ALL

ECCN 9E991 BOEING PROPRIETARY - See title page for details

CHAPTER 30
ICE AND RAIN PROTECTION

SUBJECT	CHAPTER SECTION SUBJECT	CONF	PAGE	EFFECT
GROUND WING THERMAL ANTI-ICING SOLENOID VALVE - REMOVAL/INSTALLATION	30-11-12		401	LOM ALL
Ground Wing Thermal Anti-Icing Solenoid Valve Removal TASK 30-11-12-000-801			401	LOM ALL
Ground Wing Thermal Anti-Icing Solenoid Valve Installation TASK 30-11-12-400-801			405	LOM ALL
GROUND WING THERMAL ANTI-ICING SOLENOID VALVE - ADJUSTMENT/TEST	30-11-12		501	LOM ALL
Ground Wing Thermal Anti-Icing (TAI) Solenoid Valve Test TASK 30-11-12-710-801			501	LOM ALL
WING ANTI-ICING GROUND OVERHEAT THERMAL SWITCH - REMOVAL/INSTALLATION	30-11-21		401	LOM ALL
Wing Anti-Icing Ground Overheat Thermal Switch Removal TASK 30-11-21-000-801			401	LOM ALL
Wing Anti-Icing Ground Overheat Thermal Switch Installation TASK 30-11-21-400-801			404	LOM ALL
WING ANTI-ICE TELESCOPING DUCT - REMOVAL/INSTALLATION	30-11-31		401	LOM ALL
Wing Anti-Ice Telescoping Duct Seal Removal TASK 30-11-31-000-801			401	LOM ALL
Wing Anti-Ice Telescoping Duct Seal Installation TASK 30-11-31-400-801			407	LOM ALL
Wing Anti-Ice Telescoping Duct Removal TASK 30-11-31-000-802			411	LOM ALL
Wing Anti-Ice Telescoping Duct Installation TASK 30-11-31-400-802			421	LOM ALL
WING ANTI-ICE TELESCOPING DUCT - INSPECTION/CHECK	30-11-31		601	LOM ALL
Wing Anti-Ice Telescoping Duct Check TASK 30-11-31-200-801			601	LOM ALL

ECCN 9E991 BOEING PROPRIETARY - See title page for details

CHAPTER 30
ICE AND RAIN PROTECTION

SUBJECT	CHAPTER SECTION SUBJECT	CONF	PAGE	EFFECT
ENGINE AND WING ANTI-ICE PANEL - REMOVAL/INSTALLATION	30-11-41		401	LOM ALL
Engine and Wing Anti-Ice Panel Removal TASK 30-11-41-000-801			401	LOM ALL
Engine and Wing Anti-Ice Panel Installation TASK 30-11-41-400-801			404	LOM ALL
ENGINE AND WING ANTI-ICE PANEL - ADJUSTMENT/TEST	30-11-41		501	LOM ALL
Engine and Wing Thermal Anti-Ice Panel (P5-11) Test TASK 30-11-41-710-801			501	LOM ALL
ENGINE COWL ANTI-ICING SYSTEM - ADJUSTMENT/TEST	30-21-00		501	LOM ALL
Engine Cowl Anti-Icing - Operational Test TASK 30-21-00-710-801			501	LOM ALL
ENGINE COWL TAI VALVE - REMOVAL/INSTALLATION	30-21-11		401	LOM ALL
Engine Cowl TAI Valve - Removal TASK 30-21-11-000-801			401	LOM ALL
Engine Cowl TAI Valve - Installation TASK 30-21-11-400-801			408	LOM ALL
ENGINE COWL TAI VALVE - CLEANING/PAINTING	30-21-11		701	LOM ALL; AIRPLANES WITH ENGINE COWL TAI VALVE P/N 3215618-5
Honest Orifice - Cleaning TASK 30-21-11-100-801			701	LOM ALL; AIRPLANES WITH ENGINE COWL TAI VALVE P/N 3215618-5
ENGINE ANTI-ICE PRESSURE SENSOR - REMOVAL/INSTALLATION	30-21-21		401	LOM ALL
Engine Anti-Ice Pressure Sensor Removal TASK 30-21-21-000-802			401	LOM ALL
Engine Anti-Ice Pressure Sensor Installation TASK 30-21-21-400-801			404	LOM ALL

ECCN 9E991 BOEING PROPRIETARY - See title page for details

CHAPTER 30
ICE AND RAIN PROTECTION

SUBJECT	CHAPTER SECTION SUBJECT	CONF	PAGE	EFFECT
AIR DATA SENSOR ANTI-ICING - MAINTENANCE PRACTICES	30-31-00		201	LOM ALL
Pitot Probe, AOA Sensor, and TAT Probe Heater Replacement TASK 30-31-00-900-801			201	LOM ALL
AOA Vane, Pitot, Elevator Pitot, Temperature Probes - Deactivation TASK 30-31-00-040-801			202	LOM ALL
AOA Vane, Pitot, Elevator Pitot, Temperature Probes - Activation TASK 30-31-00-440-801			204	LOM ALL
AIR DATA SENSOR ANTI-ICING - ADJUSTMENT/TEST	30-31-00		501	LOM ALL
AUTO Air Data Sensor Heating - Operational Test TASK 30-31-00-750-801			501	LOM 402, 406, 411, 412, 415, 416, 422-434, 437-447, 450-999; LOM 404, 407, 420 POST SB 737-30A1063
Pitot Probe, AOA Sensor, and TAT Probe Heater - System Test TASK 30-31-00-730-801			507	LOM ALL
CONTROL CABIN WINDOW HEAT - MAINTENANCE PRACTICES	30-41-00		201	LOM ALL
Control Cabin Window Heat - Deactivation TASK 30-41-00-040-801			201	LOM ALL
Control Cabin Window Heat - Activation TASK 30-41-00-440-801			203	LOM ALL
CONTROL CABIN WINDOW ANTI-ICING SYSTEM - ADJUSTMENT/TEST	30-41-00		501	LOM ALL
Window Heat System - Operational Test TASK 30-41-00-710-801			501	LOM ALL
CONTROL CABIN WINDOW ANTI-ICE SYSTEM - COIL CORD - INSPECTION/CHECK	30-41-00		601	LOM ALL
Coil Cord - Inspection TASK 30-41-00-200-801			601	LOM ALL

ECCN 9E991 BOEING PROPRIETARY - See title page for details

CHAPTER 30
ICE AND RAIN PROTECTION

SUBJECT	CHAPTER SECTION SUBJECT	CONF	PAGE	EFFECT
CONTROL CABIN WINDOW ANTI-ICING SYSTEM - REPAIRS	30-41-00		801	LOM ALL
Control Cabin Window Temperature Sensor - Repairs TASK 30-41-00-420-801			801	LOM ALL
WINDOW HEAT CONTROL UNIT - MAINTENANCE PRACTICES	30-41-11		201	LOM 465-999
Window Heat Control Unit (WHCU) Override Mode Activation/Deactivation TASK 30-41-11-440-801			201	LOM 465-999
WINDOW HEAT CONTROL UNIT - REMOVAL/INSTALLATION	30-41-11		401	LOM ALL
Window Heat Control Unit (WHCU) Removal TASK 30-41-11-000-801			401	LOM 402, 404, 406, 407, 411, 412, 415, 416, 420, 422-434, 437-447, 450-464
Window Heat Control Unit (WHCU) Installation TASK 30-41-11-400-801			405	LOM 402, 404, 406, 407, 411, 412, 415, 416, 420, 422-434, 437-447, 450-464
Window Heat Control Unit (WHCU) Removal TASK 30-41-11-000-803			408	LOM 465-999
Window Heat Control Unit (WHCU) Installation TASK 30-41-11-400-803			411	LOM 465-999
WINDOW HEAT CONTROL UNIT - ADJUSTMENT/TEST	30-41-11		501	LOM ALL
Window Heat Control Unit System - Test TASK 30-41-11-710-801			501	LOM ALL
WINDOW HEAT CONDUCTIVE COATING AND SENSOR - ADJUSTMENT/TEST	30-41-21		501	LOM ALL
Check the Electrical Resistance of the Window Heat Film TASK 30-41-21-000-801			501	LOM 402, 404, 406, 407, 411, 412, 415, 416, 420, 422-434, 437-447, 450-464
Measure the Resistance of the Window Temperature Sensors TASK 30-41-21-760-801			507	LOM 402, 404, 406, 407, 411, 412, 415, 416, 420, 422-434, 437-447, 450-464
Check the Electrical Resistance of the Window Heat Film TASK 30-41-21-760-802			513	LOM 465-999

ECCN 9E991 BOEING PROPRIETARY - See title page for details

SUBJECT	CHAPTER SECTION SUBJECT	CONF	PAGE	EFFECT
Measure the Resistance of the Window Temperature Sensors TASK 30-41-21-760-803			515	LOM 465-999
Measure the Insulation Resistance and Dielectric Absorption Ratio of the Control Cabin Windows TASK 30-41-21-700-801			520	LOM 465-999
Measure the Insulation Resistance and Dielectric Absorption Ratio of the Control Cabin Windows TASK 30-41-21-700-802			531	LOM 402, 404, 406, 407, 411, 412, 415, 416, 420, 422-434, 437-447, 450-464
WINDOW THERMAL SWITCH - REMOVAL/INSTALLATION	30-41-31		401	LOM 411, 412, 415, 423, 424, 427, 428, 439, 441, 464; LOM 402 PRE SB 737-56-1017
Thermal Switch Removal TASK 30-41-31-000-801			401	LOM 411, 412, 415, 423, 424, 427, 428, 439, 441, 464; LOM 402 PRE SB 737-56-1017
Thermal Switch Installation TASK 30-41-31-400-801			405	LOM 411, 412, 415, 423, 424, 427, 428, 439, 441, 464; LOM 402 PRE SB 737-56-1017
WINDOW/PITOT HEAT MODULE (P5-9) - REMOVAL/INSTALLATION	30-41-41		401	LOM ALL
Window/Pitot Heat Module (P5-9) Removal TASK 30-41-41-000-801			401	LOM ALL
Window/Pitot Heat Module (P5-9) Installation TASK 30-41-41-400-801			405	LOM ALL
WINDSHIELD WIPER SYSTEM - MAINTENANCE PRACTICES	30-42-00		201	LOM ALL
Windshield Wiper System - Deactivation TASK 30-42-00-040-801			201	LOM ALL
Windshield Wiper System - Activation TASK 30-42-00-440-801			204	LOM ALL
WINDSHIELD WIPER SYSTEM - ADJUSTMENT/TEST	30-42-00		501	LOM ALL
Windshield Wiper System - Operational Test TASK 30-42-00-700-801			501	LOM ALL

ECCN 9E991 BOEING PROPRIETARY - See title page for details

CHAPTER 30
ICE AND RAIN PROTECTION

SUBJECT	CHAPTER SECTION SUBJECT	CONF	PAGE	EFFECT
WINDSHIELD WIPER BLADE - REMOVAL/INSTALLATION	30-42-11		401	LOM ALL
Windshield Wiper Blade Removal TASK 30-42-11-020-801			401	LOM ALL
Windshield Wiper Blade Installation TASK 30-42-11-400-801			405	LOM ALL
WINDSHIELD WIPER BLADE - INSPECTION/CHECK	30-42-11		601	LOM ALL
Windshield Wiper Blade - Inspection/Check TASK 30-42-11-200-801			601	LOM ALL
WINDSHIELD WIPER MOTOR/CONVERTER - REMOVAL/INSTALLATION	30-42-21		401	LOM ALL
Wiper Motor/Converter Removal TASK 30-42-21-000-801			401	LOM ALL
Wiper Motor/Converter Installation TASK 30-42-21-400-801			407	LOM ALL
WINDSHIELD WIPER ARM - MAINTENANCE PRACTICES	30-42-31		201	LOM ALL
Windshield Wiper Arm - Removal TASK 30-42-31-000-801			201	LOM ALL
Windshield Wiper Arm - Installation TASK 30-42-31-400-801			207	LOM ALL
Windshield Wiper Arm Force - Check/Adjustment TASK 30-42-31-820-801			211	LOM ALL
Windshield Wiper Arm Position - Check/Adjustment TASK 30-42-31-820-802			219	LOM ALL
WINDSHIELD HYDROPHOBIC COATING - MAINTENANCE PRACTICES	30-43-00		201	LOM ALL
Hydrophobic Coating - Maintenance Practices TASK 30-43-00-800-801			201	LOM ALL
WATER AND DRAIN ANTI-ICING SYSTEM - MAINTENANCE PRACTICES	30-71-00		201	LOM ALL
Water and Drain Operation with 115 Volts on the Ground TASK 30-71-00-800-801			201	LOM ALL

ECCN 9E991 BOEING PROPRIETARY - See title page for details

SUBJECT	CHAPTER SECTION SUBJECT	CONF	PAGE	EFFECT
Drain Heaters - Deactivation TASK 30-71-00-040-801			202	LOM ALL
Drain Heaters - Activation TASK 30-71-00-440-801			208	LOM ALL
DRAIN AND WATER SUPPLY LINE HEATING - ADJUSTMENT/TEST	30-71-00		501	LOM ALL
Drain Mast Heater Ground and Air Mode Test TASK 30-71-00-720-801			501	LOM ALL
Water and Drain Heater Tests TASK 30-71-00-720-802			503	LOM ALL
POTABLE WATER FILL FITTING HEATER - REMOVAL/INSTALLATION	30-71-01		401	LOM ALL
Potable Water Fill Fitting Heater Removal TASK 30-71-01-000-801			401	LOM ALL
Potable Water Fill Fitting Heater Installation TASK 30-71-01-400-801			405	LOM ALL
GRAY WATER DRAIN LINE HEATER - REMOVAL/INSTALLATION	30-71-02		401	LOM ALL
Gray Water Drain Line Heater Removal TASK 30-71-02-000-801			401	LOM ALL
Gray Water Drain Line Heater Installation TASK 30-71-02-400-801			405	LOM ALL
WASTE DRAIN LINE HEATER - REMOVAL/INSTALLATION	30-71-03		401	LOM ALL
Waste Drain Line Heater Removal TASK 30-71-03-000-801			401	LOM ALL
Waste Drain Line Heater Installation TASK 30-71-03-400-801			404	LOM ALL
WASTE TANK RINSE FITTING HEATER - REMOVAL/INSTALLATION	30-71-04		401	LOM ALL
Waste Tank Rinse Fitting Heater Removal TASK 30-71-04-000-801			401	LOM ALL
Waste Tank Rinse Fitting Heater Installation TASK 30-71-04-400-801			404	LOM ALL

ECCN 9E991 BOEING PROPRIETARY - See title page for details

CHAPTER 30
ICE AND RAIN PROTECTION

SUBJECT	CHAPTER SECTION SUBJECT	CONF	PAGE	EFFECT
DRAIN MAST HEATERS - REMOVAL/INSTALLATION	30-71-05		401	LOM ALL
Drain Mast Heater Replacement TASK 30-71-05-900-801			401	LOM ALL
HEATED POTABLE WATER HOSES - REMOVAL/INSTALLATION	30-71-06		401	LOM ALL
Heated Potable Water Hose Removal TASK 30-71-06-000-801			401	LOM ALL
Heated Potable Water Hose Installation TASK 30-71-06-400-801			405	LOM ALL
ICE DETECTION SYSTEM - MAINTENANCE PRACTICES	30-81-00		201	LOM 450
Ice Detection System - Deactivation TASK 30-81-00-040-801			201	LOM 450
Ice Detection System - Activation TASK 30-81-00-440-801			203	LOM 450
ICE DETECTION SYSTEM - ADJUSTMENT/TEST	30-81-00		501	LOM 450
Ice Detection System - Operational Test TASK 30-81-00-710-801			501	LOM 450
ICE DETECTOR PROBE - REMOVAL/INSTALLATION	30-81-01		401	LOM 450
Ice Detector Probe Removal TASK 30-81-01-000-801			401	LOM 450
Ice Detector Probe Installation TASK 30-81-01-400-801			404	LOM 450
ICE DETECTOR SYSTEM LOGIC MODULE - REMOVAL/INSTALLATION	30-81-02		401	LOM 450
Ice Detector System Logic Module Removal TASK 30-81-02-000-801			401	LOM 450
Ice Detector System Logic Module Installation TASK 30-81-02-400-801			403	LOM 450

ECCN 9E991 BOEING PROPRIETARY - See title page for details

ICE AND RAIN PROTECTION - DDG MAINTENANCE PROCEDURES

1. **General**

A. This procedure has the maintenance tasks for the Master Minimum Equipment List (MMEL) maintenance requirements as shown in the Dispatch Deviations Procedures Guide (DDPG). These tasks prepare the airplane for flight with systems/components that are inoperative.

B. This procedure also has the tasks that put the airplane back to its usual condition.

C. These are the tasks for the components in the ice and rain protection system.

(1) MMEL 30-01 (DDPG) Preparation - Wing Anti-Ice Valves Inoperative

(2) MMEL 30-01 (DDPG) Restoration - Wing Anti-Ice Valves Inoperative

(3) MMEL 30-02 (DDPG) Preparation - Wing Anti-Ice Valve Position Lights Inoperative

(4) MMEL 30-02 (DDPG) Restoration - Wing Anti-Ice Valve Position Lights Inoperative

(5) MMEL 30-03 (DDPG) Preparation - Engine and Nose Cowl Anti-Ice Valves Inoperative

(6) MMEL 30-03 (DDPG) Restoration - Engine and Nose Cowl Anti-Ice Valves Inoperative

(7) MMEL 30-09 (DDPG) Preparation - Pitot, Pitot/Static and Temperature Probe Heater Lights Inoperative

(8) MMEL 30-09 (DDPG) Restoration - Pitot, Pitot/Static and Temperature Probe Heater Lights Inoperative

(9) MMEL 30-13 (DDPG) Preparation - Windshield Wiper Systems Inoperative

(10) MMEL 30-13 (DDPG) Restoration - Windshield Wiper Systems Inoperative

(11) MMEL 30-17 (DDPG) Preparation - Cowl Anti-Ice Lights Inoperative

(12) MMEL 30-17 (DDPG) Restoration - Cowl Anti-Ice Lights Inoperative

(13) MMEL 30-18 (DDPG) Preparation - Alpha Vane Heater Light Inoperative

(14) MMEL 30-18 (DDPG) Restoration - Alpha Vane Heater Light Inoperative

(15) MMEL 30-19 (DDPG) Preparation - Drain Mast Heater Inoperative

(16) MMEL 30-19 (DDPG) Restoration - Drain Mast Heater Inoperative

TASK 30-00-00-040-801

2. **MMEL 30-01 (DDPG) Preparation - Wing Anti-Ice Valves Inoperative**

(Figure 901)

A. General

(1) This task gives the maintenance steps which prepare the airplane for flight with the wing anti-ice valves inoperative.

(2) The location of the wing anti-ice valve relative to the engine exhaust area prohibits personnel from accessing the valve when the associated engine is running.

B. References

Reference	Title
27-81-00-080-801	Leading Edge Flap and Slat Locks Removal (P/B 201)
27-81-00-480-801	Leading Edge Flap and Slat Locks Installation (P/B 201)
71-00-00-800-807-F00	Start the Engine Procedure (Selection) (P/B 201)
71-00-00-800-810-F00	Start the Engine Procedure (Engine Cross Bleed Start) (P/B 201)

ECCN 9E991 BOEING PROPRIETARY - See title page for details

C. Location Zones

Zone	Area
522	Left Wing - Slat No. 4
622	Right Wing - Slat No. 5

D. Access Panels

Number	Name/Location
521AB	Outboard Leading Edge Blowout Door - Slat Station 20.04
621AB	Outboard Leading Edge Blowout Door - Slat Station 20.04

E. Prepare to Dispatch With a Wing Anti-Ice Valve Closed

SUBTASK 30-00-00-840-001

(1) Prepare to close the wing anti-ice valve:

> **WARNING** MAKE SURE THAT YOU DO THE PROCEDURE TO DEACTIVATE THE LEADING EDGE SLATS. IF THE LEADING EDGE SLATS MOVE, INJURY TO PERSONNEL AND DAMAGE TO EQUIPMENT CAN OCCUR.

(a) Do this task: Leading Edge Flap and Slat Locks Installation, TASK 27-81-00-480-801.

(b) Open this circuit breaker and install safety tag:

CAPT Electrical System Panel, P18-3

Row	Col	Number	Name
A	1	C00146	ANTI-ICE & RAIN WING ANTI-ICE VALVE

(c) For the left wing, open this access panel:

Number	Name/Location
521AB	Outboard Leading Edge Blowout Door - Slat Station 20.04

(d) For the right wing, open this access panel:

Number	Name/Location
621AB	Outboard Leading Edge Blowout Door - Slat Station 20.04

SUBTASK 30-00-00-020-001

(2) Disconnect the electrical connector from the wing anti-ice valve and stow the connector.

NOTE: The associated wing anti-ice VALVE OPEN light will illuminate bright.

SUBTASK 30-00-00-040-001

(3) Move the red lever on the wing anti-ice valve to the CLOSED position.

SUBTASK 30-00-00-840-002

(4) Return the airplane to its usual condition with a wing anti-ice valve locked closed:

(a) For the left wing, close this access panel:

Number	Name/Location
521AB	Outboard Leading Edge Blowout Door - Slat Station 20.04

(b) For the right wing, close this access panel:

Number	Name/Location
621AB	Outboard Leading Edge Blowout Door - Slat Station 20.04

ECCN 9E991 BOEING PROPRIETARY - See title page for details

(c) Remove the safety tag and close this circuit breaker:

CAPT Electrical System Panel, P18-3

Row	Col	Number	Name
A	1	C00146	ANTI-ICE & RAIN WING ANTI-ICE VALVE

(d) Activate the LE slats. To activate them, do this task: Leading Edge Flap and Slat Locks Removal, TASK 27-81-00-080-801.

SUBTASK 30-00-00-930-001

(5) Put an INOP OFF placard on the WING ANTI-ICE switch.

F. Prepare to Dispatch With the Left Wing Anti-Ice Valve Locked Open

SUBTASK 30-00-00-860-001

(1) To open the valve when APU bleed air will be used to start the engine, do these steps:

> **WARNING** MAKE SURE THAT YOU DO THE PROCEDURE TO DEACTIVATE THE LEADING EDGE SLATS. IF THE LEADING EDGE SLATS MOVE, INJURY TO PERSONNEL AND DAMAGE TO EQUIPMENT CAN OCCUR.

(a) Do this task: Leading Edge Flap and Slat Locks Installation, TASK 27-81-00-480-801.

(b) Open this circuit breaker and install safety tag:

CAPT Electrical System Panel, P18-3

Row	Col	Number	Name
A	1	C00146	ANTI-ICE & RAIN WING ANTI-ICE VALVE

(c) Open this access panel:

Number	Name/Location
521AB	Outboard Leading Edge Blowout Door - Slat Station 20.04

(d) Disconnect the electrical connector from the left wing anti-ice valve and stow the connector.

NOTE: The associated wing anti-ice VALVE OPEN light will illuminate bright.

(e) Move the red lever on the left wing anti-ice valve to the CLOSED position.

> **WARNING** MAKE SURE THAT ALL PERSONNEL AND EQUIPMENT ARE CLEAR OF THE RIGHT ENGINE DANGER AREA. THE ENGINE INTAKE AND EXHAUST CAN CAUSE INJURY PERSONNEL AND DAMAGE EQUIPMENT IN THE DANGER AREAS.

(f) Make sure that all personnel are cleared from the right engine danger area.

(g) For the right engine, do this task: Start the Engine Procedure (Selection), TASK 71-00-00-800-807-F00.

(h) Close the isolation and APU bleed air valves to depressurize the left pneumatic duct.

(i) After the pneumatic duct is depressurized, move the wing anti-ice valve to the open position.

(j) Close this access panel:

Number	Name/Location
521AB	Outboard Leading Edge Blowout Door - Slat Station 20.04

ECCN 9E991 BOEING PROPRIETARY - See title page for details

(k) Remove the safety tag and close this circuit breaker:

CAPT Electrical System Panel, P18-3

Row	Col	Number	Name
A	1	C00146	ANTI-ICE & RAIN WING ANTI-ICE VALVE

(l) Activate the LE slats. To activate them, do this task: Leading Edge Flap and Slat Locks Removal, TASK 27-81-00-080-801.

WARNING MAKE SURE THAT ALL PERSONNEL AND EQUIPMENT ARE CLEAR OF THE LEFT ENGINE DANGER AREA. THE ENGINE INTAKE AND EXHAUST CAN CAUSE INJURY PERSONNEL AND DAMAGE EQUIPMENT IN THE DANGER AREAS.

(m) Make sure that all personnel are cleared from the left engine danger area.

(n) Tell the flight deck that the left engine can be started with this task: Start the Engine Procedure (Engine Cross Bleed Start), TASK 71-00-00-800-810-F00.

SUBTASK 30-00-00-860-002

(2) To open the valve when ground service air will be used to start the engine, do these steps:

WARNING MAKE SURE THAT YOU DO THE PROCEDURE TO DEACTIVATE THE LEADING EDGE SLATS. IF THE LEADING EDGE SLATS MOVE, INJURY TO PERSONNEL AND DAMAGE TO EQUIPMENT CAN OCCUR.

(a) Do this task: Leading Edge Flap and Slat Locks Installation, TASK 27-81-00-480-801.

(b) Open this circuit breaker and install safety tag:

CAPT Electrical System Panel, P18-3

Row	Col	Number	Name
A	1	C00146	ANTI-ICE & RAIN WING ANTI-ICE VALVE

(c) Open this access panel:

Number	Name/Location
521AB	Outboard Leading Edge Blowout Door - Slat Station 20.04

(d) Disconnect the electrical connector from the left wing anti-ice valve and stow the connector.

NOTE: The associated wing anti-ice VALVE OPEN light will illuminate bright.

(e) Move the red lever on the left wing anti-ice valve to the OPEN position.

(f) Close this access panel:

Number	Name/Location
521AB	Outboard Leading Edge Blowout Door - Slat Station 20.04

(g) Remove the safety tag and close this circuit breaker:

CAPT Electrical System Panel, P18-3

Row	Col	Number	Name
A	1	C00146	ANTI-ICE & RAIN WING ANTI-ICE VALVE

(h) Activate the LE slats. To activate them, do this task: Leading Edge Flap and Slat Locks Removal, TASK 27-81-00-080-801.

ECCN 9E991 BOEING PROPRIETARY - See title page for details

> **WARNING** MAKE SURE THAT ALL PERSONNEL AND EQUIPMENT ARE CLEAR OF THE ENGINE DANGER AREAS. THE ENGINE INTAKE AND EXHAUST CAN CAUSE INJURIES TO PERSONNEL AND DAMAGE TO EQUIPMENT IN THE DANGER AREAS.

(i) Make sure that all personnel are cleared from the engines danger areas.

(j) Tell the flight deck that the right engine can be started (isolation valve closed) and then the left engine can be started with this task: Start the Engine Procedure (Engine Cross Bleed Start), TASK 71-00-00-800-810-F00.

SUBTASK 30-00-00-930-002

(3) Put an INOP ON placard on the WING ANTI-ICE switch.

G. Prepare to Dispatch With the Right Wing Anti-Ice Valve Locked Open

SUBTASK 30-00-00-860-003

(1) To open the valve when APU bleed air will be used to start the engine, do these steps:

> **WARNING** MAKE SURE THAT YOU DO THE PROCEDURE TO DEACTIVATE THE LEADING EDGE SLATS. IF THE LEADING EDGE SLATS MOVE, INJURY TO PERSONNEL AND DAMAGE TO EQUIPMENT CAN OCCUR.

(a) Do this task: Leading Edge Flap and Slat Locks Installation, TASK 27-81-00-480-801.

(b) Open this circuit breaker and install safety tag:

CAPT Electrical System Panel, P18-3

Row	Col	Number	Name
A	1	C00146	ANTI-ICE & RAIN WING ANTI-ICE VALVE

(c) Open this access panel:

Number	Name/Location
621AB	Outboard Leading Edge Blowout Door - Slat Station 20.04

(d) Disconnect the electrical connector from the right wing anti-ice valve and stow the connector.

NOTE: The associated wing anti-ice VALVE OPEN light will illuminate bright.

(e) Move the red lever on the right wing anti-ice valve to the OPEN position.

(f) Close this access panel:

Number	Name/Location
621AB	Outboard Leading Edge Blowout Door - Slat Station 20.04

(g) Remove the safety tag and close this circuit breaker:

CAPT Electrical System Panel, P18-3

Row	Col	Number	Name
A	1	C00146	ANTI-ICE & RAIN WING ANTI-ICE VALVE

(h) Activate the LE slats. To activate them, do this task: Leading Edge Flap and Slat Locks Removal, TASK 27-81-00-080-801.

ECCN 9E991 BOEING PROPRIETARY - See title page for details

WARNING MAKE SURE THAT ALL PERSONNEL AND EQUIPMENT ARE CLEAR OF THE ENGINE DANGER AREAS. THE ENGINE INTAKE AND EXHAUST CAN CAUSE INJURIES TO PERSONNEL AND DAMAGE TO EQUIPMENT IN THE DANGER AREAS.

(i) Make sure that all personnel are cleared from the engines danger areas.

(j) Tell the flight deck that the left engine can be started (isolation valve closed) and then the right engine can be started with this task: Start the Engine Procedure (Engine Cross Bleed Start), TASK 71-00-00-800-810-F00.

SUBTASK 30-00-00-860-004

(2) To open the valve when ground service air will be used to start the engine, do these steps:

WARNING MAKE SURE THAT YOU DO THE PROCEDURE TO DEACTIVATE THE LEADING EDGE SLATS. IF THE LEADING EDGE SLATS MOVE, INJURY TO PERSONNEL AND DAMAGE TO EQUIPMENT CAN OCCUR.

(a) Do this task: Leading Edge Flap and Slat Locks Installation, TASK 27-81-00-480-801.

(b) Open this circuit breaker and install safety tag:

CAPT Electrical System Panel, P18-3

Row	Col	Number	Name
A	1	C00146	ANTI-ICE & RAIN WING ANTI-ICE VALVE

(c) Open this access panel:

Number	Name/Location
621AB	Outboard Leading Edge Blowout Door - Slat Station 20.04

(d) Disconnect the electrical connector from the right wing anti-ice valve and stow the connector.

NOTE: The associated wing anti-ice VALVE OPEN light will illuminate bright.

(e) Move the red lever on the right wing anti-ice valve to the CLOSED position.

WARNING MAKE SURE THAT ALL PERSONNEL AND EQUIPMENT ARE CLEAR OF THE LEFT ENGINE DANGER AREA. THE ENGINE INTAKE AND EXHAUST CAN CAUSE INJURY PERSONNEL AND DAMAGE EQUIPMENT IN THE DANGER AREAS.

(f) Make sure that all personnel are cleared from the left engine danger area.

(g) For the left engine, do this task: Start the Engine Procedure (Selection), TASK 71-00-00-800-807-F00.

(h) Remove the ground air source from the airplane.

(i) Close the isolation and APU bleed air valves to depressurize the right pneumatic duct.

(j) After the pneumatic duct is depressurized, manually move the wing anti-ice valve to the open position.

(k) Close this access panel:

Number	Name/Location
621AB	Outboard Leading Edge Blowout Door - Slat Station 20.04

ECCN 9E991 BOEING PROPRIETARY - See title page for details

(l) Remove the safety tag and close this circuit breaker:

CAPT Electrical System Panel, P18-3

Row	Col	Number	Name
A	1	C00146	ANTI-ICE & RAIN WING ANTI-ICE VALVE

(m) Activate the LE slats. To activate them, do this task: Leading Edge Flap and Slat Locks Removal, TASK 27-81-00-080-801.

WARNING MAKE SURE THAT ALL PERSONNEL AND EQUIPMENT ARE CLEAR OF THE RIGHT ENGINE DANGER AREA. THE ENGINE INTAKE AND EXHAUST CAN CAUSE INJURY PERSONNEL AND DAMAGE EQUIPMENT IN THE DANGER AREAS.

(n) Make sure that all personnel are cleared from the right engine danger area.

(o) Tell the flight deck that the right engine can be started with this task: Start the Engine Procedure (Engine Cross Bleed Start), TASK 71-00-00-800-810-F00.

SUBTASK 30-00-00-930-003

(3) Put an INOP ON placard on the WING ANTI-ICE switch.

END OF TASK

ECCN 9E991 BOEING PROPRIETARY - See title page for details

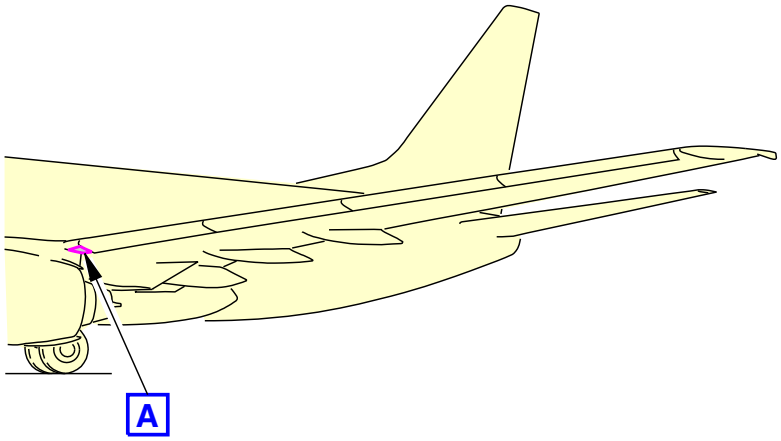

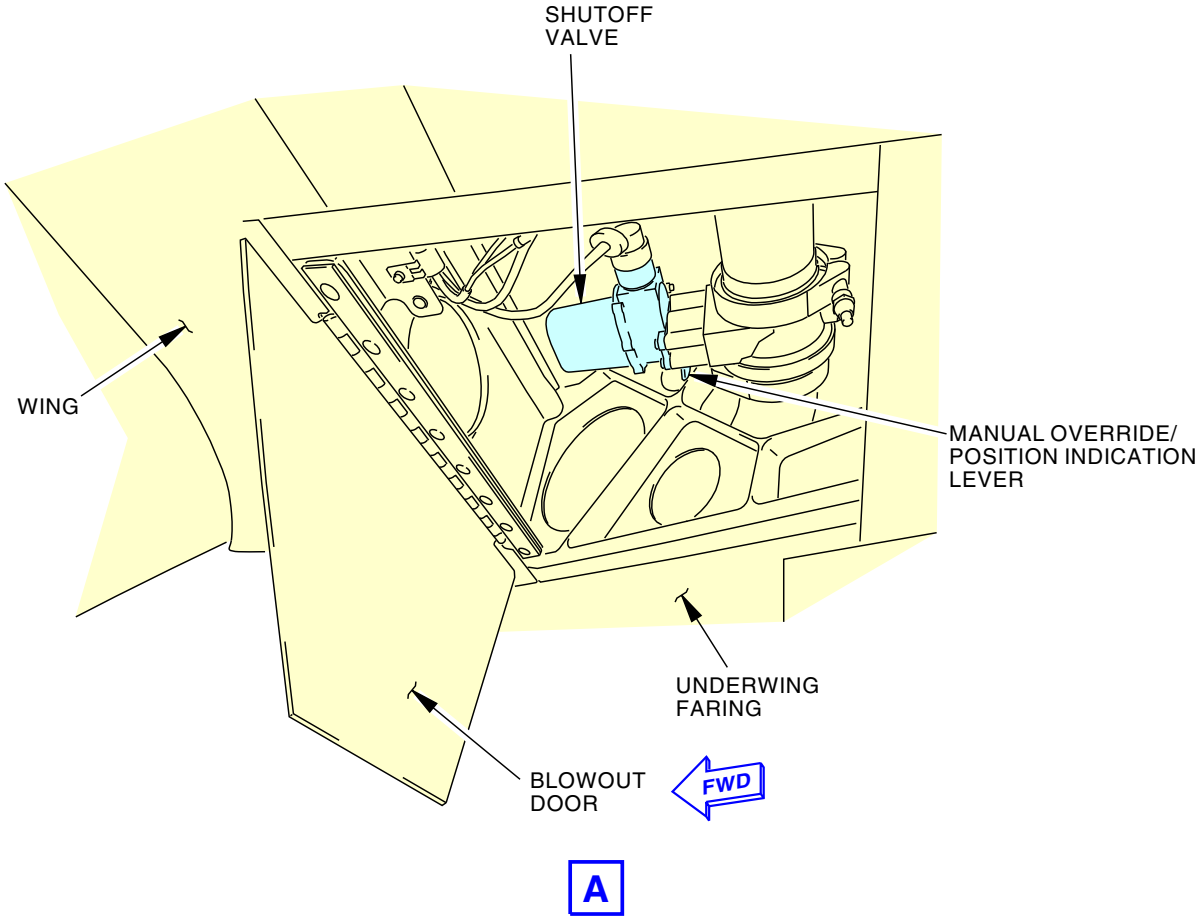

G99806 S0006573026_V2

Wing Thermal Anti-Icing Shutoff Valve
Figure 901/30-00-00-990-801

ECCN 9E991 BOEING PROPRIETARY - See title page for details

TASK 30-00-00-440-801

3. MMEL 30-01 (DDPG) Restoration - Wing Anti-Ice Valves Inoperative

A. General

(1) This task puts the airplane back to its usual condition after operation with the wing anti-ice valves inoperative.

B. References

Reference	Title
27-81-00-080-801	Leading Edge Flap and Slat Locks Removal (P/B 201)
27-81-00-480-801	Leading Edge Flap and Slat Locks Installation (P/B 201)

C. Location Zones

Zone	Area
522	Left Wing - Slat No. 4
622	Right Wing - Slat No. 5

D. Access Panels

Number	Name/Location
521AB	Outboard Leading Edge Blowout Door - Slat Station 20.04
621AB	Outboard Leading Edge Blowout Door - Slat Station 20.04

E. Reactivate the Wing Anti-Ice Valve

SUBTASK 30-00-00-860-005

(1) Open this circuit breaker and install safety tag:

CAPT Electrical System Panel, P18-3

Row	Col	Number	Name
A	1	C00146	ANTI-ICE & RAIN WING ANTI-ICE VALVE

SUBTASK 30-00-00-860-006

(2) Set the WING ANTI-ICE switch on the anti-ice panel on the P5 overhead panel in the flight compartment to OFF.

SUBTASK 30-00-00-860-007

WARNING MAKE SURE YOU DO THE PROCEDURE TO DEACTIVATE THE LE SLATS. THE LEADING EDGE SLATS CAN MOVE AND CAUSE INJURIES TO PERSONS IF THEY ARE NOT DEACTIVATED.

(3) Do this task: Leading Edge Flap and Slat Locks Installation, TASK 27-81-00-480-801.

SUBTASK 30-00-00-010-001

(4) For the left wing, open this access panel:

Number	Name/Location
521AB	Outboard Leading Edge Blowout Door - Slat Station 20.04

SUBTASK 30-00-00-010-002

(5) For the right wing, open this access panel:

Number	Name/Location
621AB	Outboard Leading Edge Blowout Door - Slat Station 20.04

SUBTASK 30-00-00-420-001

(6) Connect the electrical connector to the wing anti-ice valve.

ECCN 9E991 BOEING PROPRIETARY - See title page for details

SUBTASK 30-00-00-860-008

(7) Remove the safety tag and close this circuit breaker:

CAPT Electrical System Panel, P18-3

Row	Col	Number	Name
A	1	C00146	ANTI-ICE & RAIN WING ANTI-ICE VALVE

F. Wing Anti-Ice Valve Repair

SUBTASK 30-00-00-810-001

(1) Correct the fault.

(a) Find the fault code or description of the fault that occured.

(b) If you find a fault code, then do these steps:

1) Go to the Fault Code Index in the applicable chapter of the FIM and find the fault code.

NOTE: The first two digits of the fault code is the FIM chapter.

2) Find the task number on the same line as the fault code.

3) Go to the task in the FIM and do the steps in the task.

(c) If you find a description of the fault, then do these steps:

1) Go to the Observed Fault List at the beginning of the FIM and find the best description for the fault.

2) Find the task number on the same line as the fault description.

3) Go to the task in the FIM and do the steps in the task.

G. Put the Airplane Back to Its Usual Condition

SUBTASK 30-00-00-410-001

(1) For the left wing, close this access panel:

Number	Name/Location
521AB	Outboard Leading Edge Blowout Door - Slat Station 20.04

SUBTASK 30-00-00-410-002

(2) For the right wing, close this access panel:

Number	Name/Location
621AB	Outboard Leading Edge Blowout Door - Slat Station 20.04

SUBTASK 30-00-00-440-001

(3) Activate the LE slats. To activate them, do this task: Leading Edge Flap and Slat Locks Removal, TASK 27-81-00-080-801.

SUBTASK 30-00-00-020-002

(4) If the fault was repaired, remove the INOP placard from the WING ANTI-ICE switch.

END OF TASK

ECCN 9E991 BOEING PROPRIETARY - See title page for details

TASK 30-00-00-040-802

4. MMEL 30-02 (DDPG) Preparation - Wing Anti-Ice Valve Position Lights Inoperative

A. General

(1) This task gives the maintenance steps which prepare the airplane for flight with the wing anti-ice valve position lights inoperative.

(2) This procedure tests the valve connected to the failed position light. If both position lights are failed, both valves must be tested.

B. References

Reference	Title
27-81-00-080-801	Leading Edge Flap and Slat Locks Removal (P/B 201)
27-81-00-480-801	Leading Edge Flap and Slat Locks Installation (P/B 201)

C. Location Zones

Zone	Area
522	Left Wing - Slat No. 4
622	Right Wing - Slat No. 5

D. Access Panels

Number	Name/Location
521AB	Outboard Leading Edge Blowout Door - Slat Station 20.04
621AB	Outboard Leading Edge Blowout Door - Slat Station 20.04

E. Prepare for the Procedure

SUBTASK 30-00-00-860-009

WARNING MAKE SURE YOU DO THE PROCEDURE TO DEACTIVATE THE LE SLATS. THE LEADING EDGE SLATS CAN MOVE AND CAUSE INJURIES TO PERSONS IF THEY ARE NOT DEACTIVATED.

(1) Do this task: Leading Edge Flap and Slat Locks Installation, TASK 27-81-00-480-801.

SUBTASK 30-00-00-010-003

(2) For the left wing, open this access panel:

Number	Name/Location
521AB	Outboard Leading Edge Blowout Door - Slat Station 20.04

SUBTASK 30-00-00-010-004

(3) For the right wing, open this access panel:

Number	Name/Location
621AB	Outboard Leading Edge Blowout Door - Slat Station 20.04

F. Test the Wing Anti-Ice Valve

SUBTASK 30-00-00-710-001

(1) Put the WING ANTI-ICE switch in the ON position.

SUBTASK 30-00-00-710-002

(2) Observe the position indicator on the wing anti-ice valve and make sure the valve indicates OPEN.

SUBTASK 30-00-00-710-003

(3) Put the WING ANTI-ICE switch in the OFF position.

ECCN 9E991 BOEING PROPRIETARY - See title page for details

SUBTASK 30-00-00-710-004

(4) Observe the position indicator on the wing anti-ice valve and make sure the valve indicates CLOSED.

SUBTASK 30-00-00-930-004

(5) Attach an INOP placard to the applicable VALVE OPEN light.

G. Return the Airplane to Its Usual Condition

SUBTASK 30-00-00-010-005

(1) For the left wing, close this access panel:

Number	Name/Location
521AB	Outboard Leading Edge Blowout Door - Slat Station 20.04

SUBTASK 30-00-00-010-006

(2) For the right wing, close this access panel:

Number	Name/Location
621AB	Outboard Leading Edge Blowout Door - Slat Station 20.04

SUBTASK 30-00-00-440-002

(3) Do this task: Leading Edge Flap and Slat Locks Removal, TASK 27-81-00-080-801.

END OF TASK

TASK 30-00-00-440-802

5. MMEL 30-02 (DDPG) Restoration - Wing Anti-Ice Valve Position Lights Inoperative

A. General

(1) This task puts the airplane back to its usual condition after operation with the wing anti-ice valve position lights inoperative.

B. Location Zones

Zone	Area
522	Left Wing - Slat No. 4
622	Right Wing - Slat No. 5

C. Procedure

SUBTASK 30-00-00-810-002

(1) Correct the fault.

(a) Find the fault code or description of the fault that occured.

(b) If you find a fault code, then do these steps:

1) Go to the Fault Code Index in the applicable chapter of the FIM and find the fault code.

NOTE: The first two digits of the fault code is the FIM chapter.

2) Find the task number on the same line as the fault code.

3) Go to the task in the FIM and do the steps in the task.

(c) If you find a description of the fault, then do these steps:

1) Go to the Observed Fault List at the beginning of the FIM and find the best description for the fault.

2) Find the task number on the same line as the fault description.

3) Go to the task in the FIM and do the steps in the task.

ECCN 9E991 BOEING PROPRIETARY - See title page for details

SUBTASK 30-00-00-020-003

(2) If the fault was repaired, remove the INOP placard from the valve open light.

END OF TASK

TASK 30-00-00-040-803

6. **MMEL 30-03 (DDPG) Preparation - Engine and Nose Cowl Anti-Ice Valves Inoperative**
(Figure 902, Figure 903)

A. **General**

(1) This task gives the maintenance steps which prepare the airplane for flight with the engine anti-ice valves inoperative.

(2) The engine anti-ice valves can be deactivated by locking them closed or open.

B. **References**

Reference	Title
71-11-02-010-801-F00	Open the Fan Cowl Panels (P/B 201)
71-11-02-410-801-F00	Close the Fan Cowl Panels (P/B 201)
78-31-00-010-801-F00	Open the Thrust Reverser (Selection) (P/B 201)
78-31-00-010-804-F00	Close the Thrust Reverser (Selection) (P/B 201)

C. **Consumable Materials**

Reference	Description	Specification
D00010	Compound - Thread Antiseize, High Temperature	MIL-PRF-907
D00667	Compound - Antiseize - Loctite C5-A Copper Based Anti-Seize (Replaces FEL-PRO C5-A)	MIL-PRF-907
D50179	Compound - Lubricating (Lockrey Liqui-Moly NV Thread Compound)	
D50188	Compound - Anti-Seize, Loctite Silver Grade	MIL-PRF-907

D. **Location Zones**

Zone	Area
411	Engine 1 - Engine
421	Engine 2 - Engine

E. **Prepare for the Flight with Engine and Nose Cowl Anti-Ice Valves Inoperative**

SUBTASK 30-00-00-010-007

(1) Do this task: Open the Fan Cowl Panels, TASK 71-11-02-010-801-F00.

SUBTASK 30-00-00-010-008

(2) Do this task: Open the Thrust Reverser (Selection), TASK 78-31-00-010-801-F00.

SUBTASK 30-00-00-860-019

(3) Open these circuit breakers and install safety tags:

CAPT Electrical System Panel, P18-3

Row	Col	Number	Name
A	6	C00148	ANTI-ICE & RAIN ENG 1 & WING CONT
A	7	C01001	ANTI-ICE & RAIN ENG 1 COWL AI VALVE
B	6	C00149	ANTI-ICE & RAIN ENGINE 2 CONTROL
B	7	C01002	ANTI-ICE & RAIN ENG 2 COWL AI VALVE

ECCN 9E991 BOEING PROPRIETARY - See title page for details

SUBTASK 30-00-00-860-032

(4) Set each engine start lever in the CUTOFF position.

F. Put the Engine Anti-Ice Valve Inoperative Closed

SUBTASK 30-00-00-210-001

(1) To manually position the valve in the CLOSED position, do these steps:

(a) Loosen the retaining screw on the manual locking assembly.

(b) Move the hex shaft to the CLOSED desired position.

(c) Slide the locking assembly up the shaft into the recess in the cover plate.

(d) Tighten the retaining screw to 20 ±1 in-lb (2.26 ±0.11 N·m).

NOTE: Boeing recommends a 1/4 inch, 6 point, closed end spanner or socket to do this step.

G. Put the Engine Anti-Ice Valve Inoperative Open

NOTE: Dispatching with an engine and nose cowl anti-ice valve inoperative open will cause the associated COWL VALVE OPEN light to illuminate bright blue, on the P5-11 panel, and associated Thermal Anti-Ice (TAI) indication to illuminate amber on the flight deck Common Display System (CDS).

SUBTASK 30-00-00-210-002

(1) To manually position the valve in the OPEN position, do these steps:

(a) Loosen the retaining screw on the manual locking assembly.

(b) Move the hex shaft to the OPEN position.

(c) Slide the locking assembly up the shaft into the recess in the cover plate.

(d) Apply a small quantity of Liqui-Moly NV Thread Compound, D50179, to the threads of the retaining screw.

(e) Tighten the retaining screw to 20 ±1 in-lb (2.26 ±0.11 N·m).

NOTE: Boeing recommends a 1/4 inch, 6 point, closed end spanner or socket to do this step.

SUBTASK 30-00-00-020-006

(2) Disconnect, cap, and stow the DP1302 ELECTRICAL CONNECTOR [3] on the ANTI-ICE PRESSURE SWITCH [4] (Figure 902).

SUBTASK 30-00-00-860-010

(3) Close the HIGH STAGE VALVE [5] from the 9th stage bleed air source (Figure 903).

NOTE: Only one high stage valve may be locked in the closed position for dispatch. Dispatch with the opposite high stage valve inoperative under MMEL item 36-9 is not allowed.

(a) On the MANUAL OVERRIDE/POSITION INDICATOR [6], turn the manual override nut to align the position indicator with the CLOSED position.

(b) Loosen the bolt.

(c) Push in the lock knob to lock the high stage valve closed.

(d) Apply Loctite LB 8150 anti-seize compound, D50188, or Loctite C5-A compound, D00667, or compound, D00010, to the threads of the bolt.

(e) Tighten the bolt to 50 in-lb (5.65 N·m) - 55 in-lb (6.21 N·m) to hold the lock knob in its position.

ECCN 9E991 BOEING PROPRIETARY - See title page for details

H. Secure the Engine Access Panels

SUBTASK 30-00-00-860-020

(1) Remove the safety tags and close these circuit breakers:

CAPT Electrical System Panel, P18-3

Row	Col	Number	Name
A	6	C00148	ANTI-ICE & RAIN ENG 1 & WING CONT
A	7	C01001	ANTI-ICE & RAIN ENG 1 COWL AI VALVE
B	6	C00149	ANTI-ICE & RAIN ENGINE 2 CONTROL
B	7	C01002	ANTI-ICE & RAIN ENG 2 COWL AI VALVE

SUBTASK 30-00-00-010-010

(2) Do this task: Close the Thrust Reverser (Selection), TASK 78-31-00-010-804-F00.

SUBTASK 30-00-00-010-009

(3) Do this task: Close the Fan Cowl Panels, TASK 71-11-02-410-801-F00.

I. Put INOP Placards on the Affected Switch and Light

SUBTASK 30-00-00-930-005

(1) Put an INOP LOCKED OPEN or INOP LOCKED CLOSED placard on the affected ENG ANTI-ICE switch.

END OF TASK

ECCN 9E991 BOEING PROPRIETARY - See title page for details

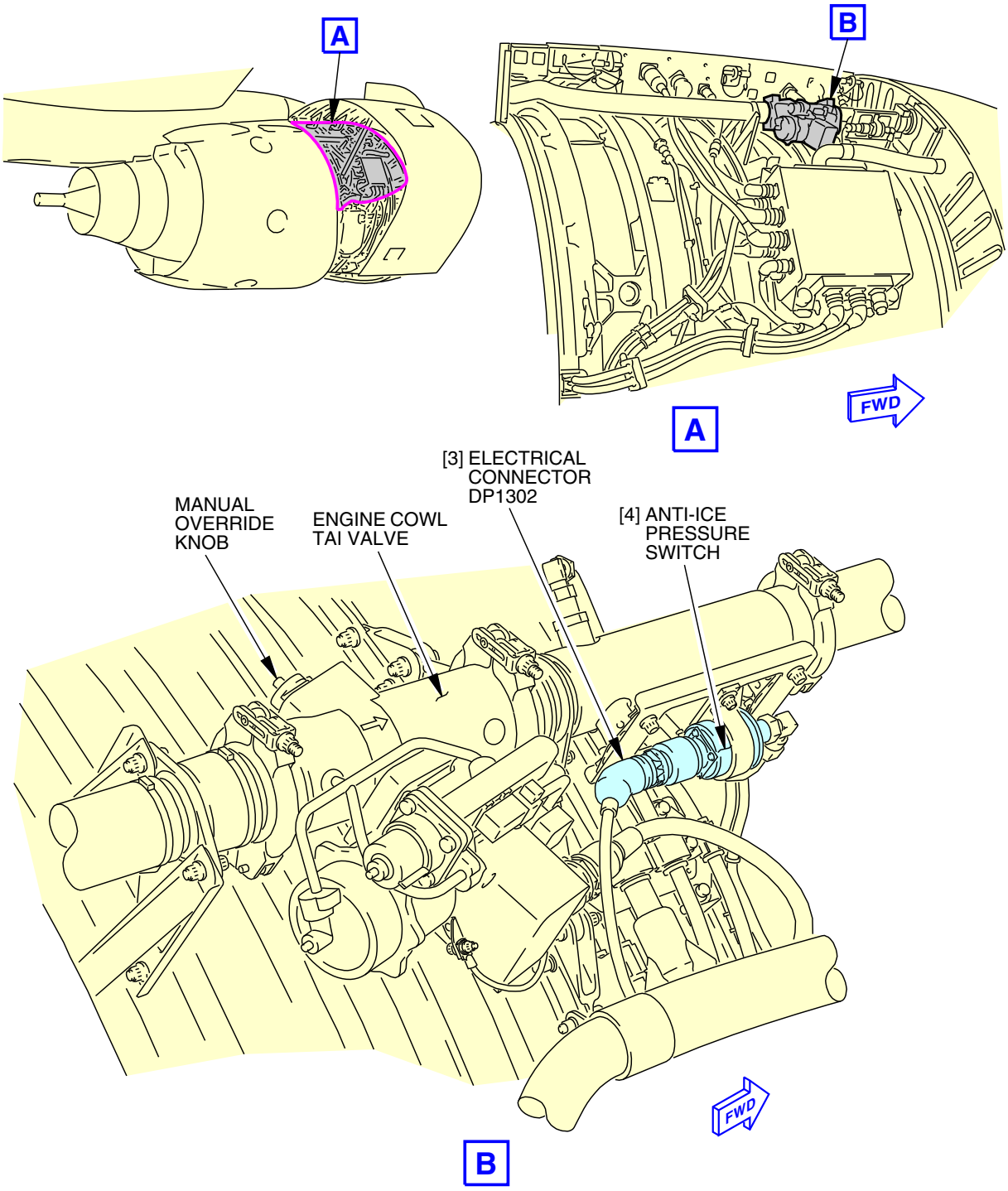

G99855 S0006573031_V6

Engine Cowl TAI Valve Deactivation
Figure 902/30-00-00-990-802

ECCN 9E991 BOEING PROPRIETARY - See title page for details

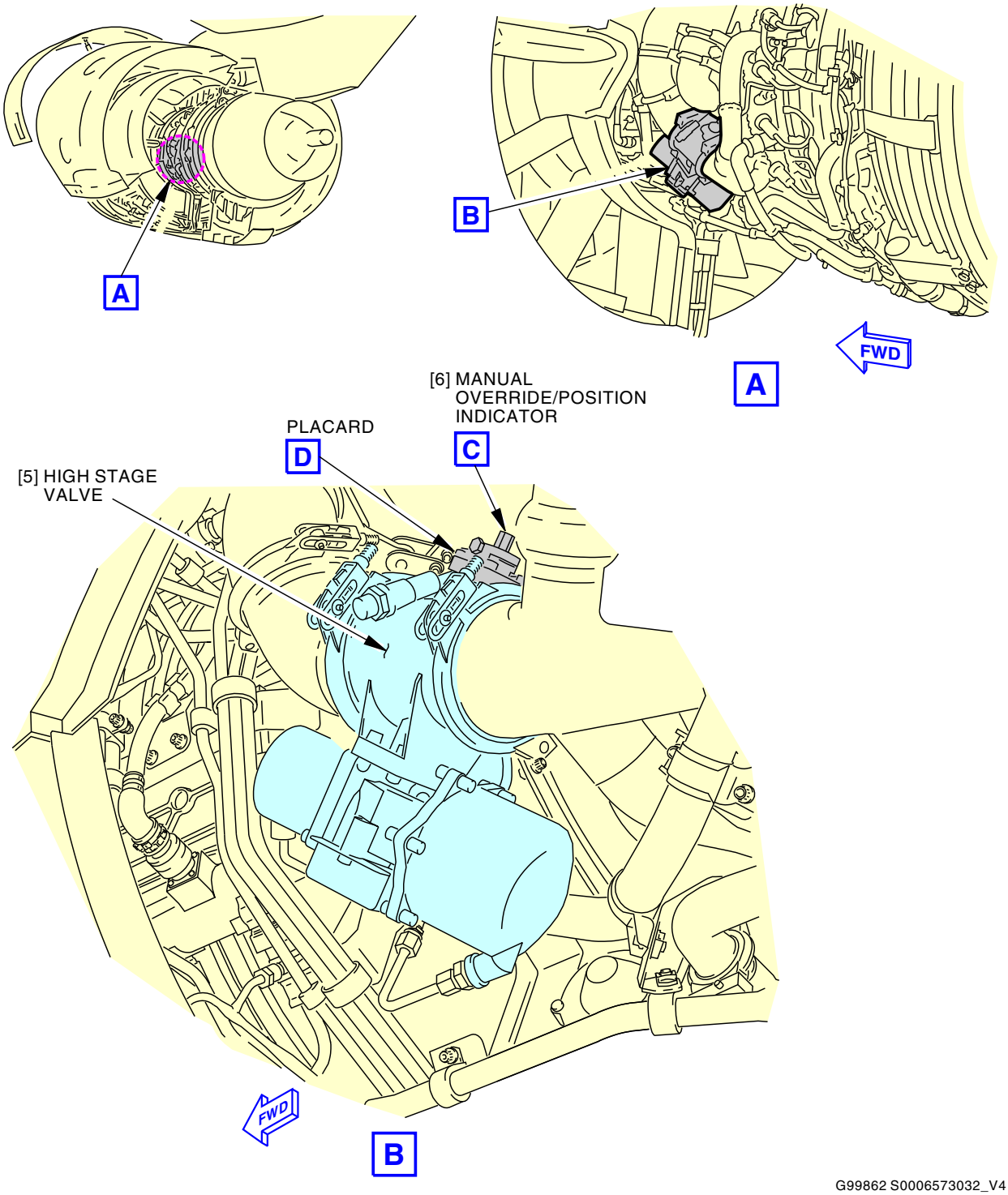

G99862 S0006573032_V4

High Stage Valve Deactivation
Figure 903/30-00-00-990-803 (Sheet 1 of 2)

ECCN 9E991 BOEING PROPRIETARY - See title page for details

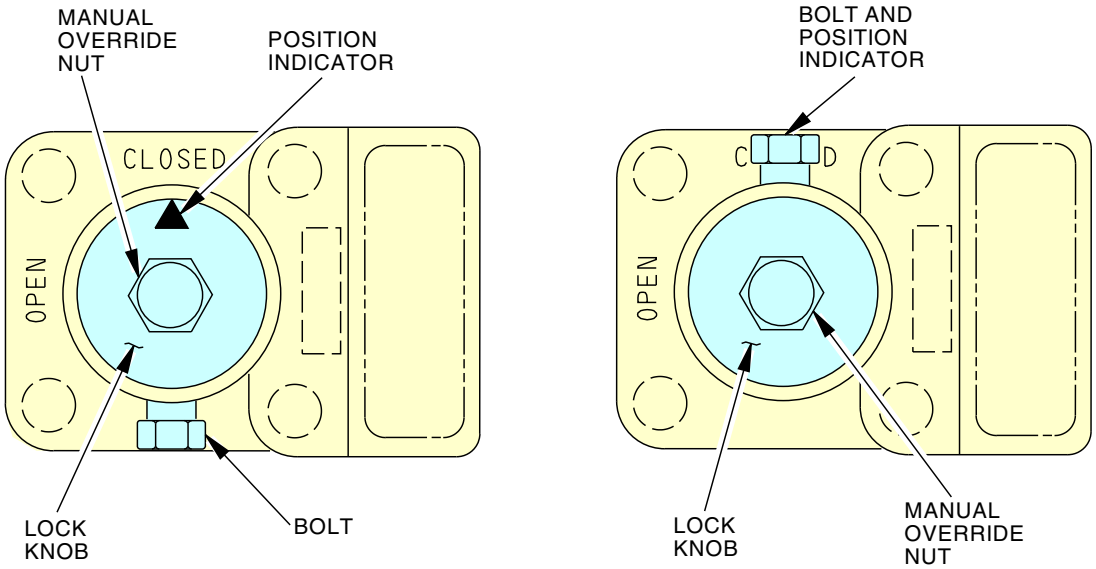

MANUAL OVERRIDE/ POSITION INDICATOR (POST-HONEYWELL-SB 36-1724)

C

MANUAL OVERRIDE/ POSITION INDICATOR (PRE-HONEYWELL-SB 36-1724)

C

WRENCH/LATCH/LOCK
WRENCH SHAFT HEX AS REQD
UNLOCK: LOOSEN KNOB BOLT-90˚CCW
LATCH: PUSH KNOB IN
UNLATCH: PULL KNOB OUT
LOCK: TIGHTEN KNOB BOLT

PLACARD

D

G99866 S0006573033_V2

High Stage Valve Deactivation
Figure 903/30-00-00-990-803 (Sheet 2 of 2)

ECCN 9E991 BOEING PROPRIETARY - See title page for details

TASK 30-00-00-440-803

7. MMEL 30-03 (DDPG) Restoration - Engine and Nose Cowl Anti-Ice Valves Inoperative

(Figure 903)

A. General

(1) This task puts the airplane back to its usual condition after operation with the engine anti-ice systems inoperative.

B. References

Reference	Title
71-11-02-010-801-F00	Open the Fan Cowl Panels (P/B 201)
71-11-02-410-801-F00	Close the Fan Cowl Panels (P/B 201)
78-31-00-010-801-F00	Open the Thrust Reverser (Selection) (P/B 201)
78-31-00-010-804-F00	Close the Thrust Reverser (Selection) (P/B 201)

C. Consumable Materials

Reference	Description	Specification
D00010	Compound - Thread Antiseize, High Temperature	MIL-PRF-907
D00667	Compound - Antiseize - Loctite C5-A Copper Based Anti-Seize (Replaces FEL-PRO C5-A)	MIL-PRF-907
D50179	Compound - Lubricating (Lockrey Liqui-Moly NV Thread Compound)	
D50188	Compound - Anti-Seize, Loctite Silver Grade	MIL-PRF-907

D. Location Zones

Zone	Area
411	Engine 1 - Engine
421	Engine 2 - Engine

E. Prepare for the Engine and Nose Cowl Anti-Ice Valves Unlocking

SUBTASK 30-00-00-010-011

(1) Do this task: Open the Fan Cowl Panels, TASK 71-11-02-010-801-F00.

SUBTASK 30-00-00-010-012

(2) Do this task: Open the Thrust Reverser (Selection), TASK 78-31-00-010-801-F00.

SUBTASK 30-00-00-860-021

(3) Open these circuit breakers and install safety tags:

CAPT Electrical System Panel, P18-3

Row	Col	Number	Name
A	6	C00148	ANTI-ICE & RAIN ENG 1 & WING CONT
A	7	C01001	ANTI-ICE & RAIN ENG 1 COWL AI VALVE
B	6	C00149	ANTI-ICE & RAIN ENGINE 2 CONTROL
B	7	C01002	ANTI-ICE & RAIN ENG 2 COWL AI VALVE

F. Engine and Nose Cowl Anti-Ice Valves Unlocking

SUBTASK 30-00-00-210-004

(1) Unlock the engine cowl anti-ice valve, do these steps:

(a) Loosen the retaining screw on the manual locking assembly.

(b) Slide the locking assembly out of the cover plate recess.

ECCN 9E991 BOEING PROPRIETARY - See title page for details

(c) Apply a small quantity of Liqui-Moly NV Thread Compound, D50179, to the threads of the retaining screw.

(d) Tighten the retaining screw to 20 ±1 in-lb (2.26 ±0.11 N·m).

SUBTASK 30-00-00-420-003

(2) Connect the electrical connector to the pressure switch.

SUBTASK 30-00-00-860-031

(3) If it is necessary, unlock the HIGH STAGE VALVE [5] from the 9th stage bleed air source (Figure 903).

(a) Loosen the bolt.

(b) Pull the lock knob out to unlock the high stage valve.

(c) Apply Loctite LB 8150 anti-seize compound, D50188, or Loctite C5-A compound, D00667, or compound, D00010, to the threads of the bolt.

(d) Tighten the bolt to 50 in-lb (5.65 N·m) - 55 in-lb (6.21 N·m) to hold the lock knob in its position.

SUBTASK 30-00-00-860-022

(4) Remove the safety tags and close these circuit breakers:

CAPT Electrical System Panel, P18-3

Row	Col	Number	Name
A	6	C00148	ANTI-ICE & RAIN ENG 1 & WING CONT
A	7	C01001	ANTI-ICE & RAIN ENG 1 COWL AI VALVE
B	6	C00149	ANTI-ICE & RAIN ENGINE 2 CONTROL
B	7	C01002	ANTI-ICE & RAIN ENG 2 COWL AI VALVE

G. Secure the Engine Access Panels

SUBTASK 30-00-00-010-014

(1) Do this task: Close the Thrust Reverser (Selection), TASK 78-31-00-010-804-F00.

SUBTASK 30-00-00-010-013

(2) Do this task: Close the Fan Cowl Panels, TASK 71-11-02-410-801-F00.

H. Engine Cowl Anti-Ice Valve Repair

SUBTASK 30-00-00-810-003

(1) Correct the fault.

(a) Find the fault code or description of the fault that occurred.

(b) If you find a fault code, do these steps:

1) Refer to the Fault Code Index in the applicable chapter of the FIM and find the fault code.

NOTE: The first two digits of the fault code is the FIM chapter.

2) Find the task number on the same line as the fault code.

3) Refer to the task in the FIM and do the steps in the task.

(c) If you find a description of the fault, do these steps:

1) Refer to the Observed Fault List at the beginning of the FIM and find the best description for the fault.

2) Find the task number on the same line as the fault description.

3) Refer to the task in the FIM and do the steps in the task.

ECCN 9E991 BOEING PROPRIETARY - See title page for details

SUBTASK 30-00-00-440-003

(2) If the fault was repaired, remove the INOP placards from the affected position light and ENG ANTI-ICE switch.

——— END OF TASK ———

TASK 30-00-00-040-805

8. **MMEL 30-09 (DDPG) Preparation - Pitot, Pitot/Static and Temperature Probe Heater Lights Inoperative**

A. **General**

(1) This task gives the maintenance steps which prepare the airplane for flight with a pitot, pitot/static, and temperature probe heater light inoperative.

B. **References**

Reference	Title
24-22-00-860-813	Supply External Power (P/B 201)

C. **Location Zones**

Zone	Area
200	Upper Half of Fuselage

D. **Procedure**

SUBTASK 30-00-00-710-005

(1) Make sure the probe heater associated with the light operates.

(a) Make sure the covers are removed from all air data probes and vanes.

(b) Do this task: Supply External Power, TASK 24-22-00-860-813.

WARNING DO NOT TOUCH THE AIR DATA PROBE. THE PROBE CAN GET VERY HOT. A HOT PROBE CAN CAUSE INJURY TO PERSONNEL.

CAUTION DO NOT HEAT THE AIR DATA PROBE LONGER THAN IS NECESSARY TO RUN THE TEST. HEATER LIFE CAN BE SHORTENNED IF YOU LEAVE IT ON LONGER THAN NECESSARY TO RUN THE TEST.

(c) Put the applicable PITOT STATIC HEAT switch to the ON position.

(d) Make sure the applicable probe gets warm.

(e) Put the applicable PITOT STATIC HEAT switch to the OFF or AUTO position.

SUBTASK 30-00-00-930-007

(2) Put an INOP placard on the affected sensor heater light.

——— END OF TASK ———

TASK 30-00-00-440-805

9. **MMEL 30-09 (DDPG) Restoration - Pitot, Pitot/Static and Temperature Probe Heater Lights Inoperative**

A. **General**

(1) This task puts the airplane back to its usual condition after operation with a pitot, pitot/static, and temperature probe heater light inoperative.

ECCN 9E991 BOEING PROPRIETARY - See title page for details

B. Procedure

SUBTASK 30-00-00-810-005

(1) Correct the fault.

(a) Find the fault code or description of the fault that occured.

(b) If you find a fault code, then do these steps:

1) Go to the Fault Code Index in the applicable chapter of the FIM and find the fault code.

NOTE: The first two digits of the fault code is the FIM chapter.

2) Find the task number on the same line as the fault code.

3) Go to the task in the FIM and do the steps in the task.

(c) If you find a description of the fault, then do these steps:

1) Go to the Observed Fault List at the beginning of the FIM and find the best description for the fault.

2) Find the task number on the same line as the fault description.

3) Go to the task in the FIM and do the steps in the task.

SUBTASK 30-00-00-440-005

(2) If the fault was repaired, remove the INOP placard from the affected light.

END OF TASK

TASK 30-00-00-040-806

10. MMEL 30-13 (DDPG) Preparation - Windshield Wiper System Inoperative

A. General

(1) This task gives the maintenance steps which prepare the airplane for flight with windshield wiper systems inoperative.

NOTE: This maintenance procedure is optional.

B. References

Reference	Title
30-42-31-000-801	Windshield Wiper Arm - Removal (P/B 201)
30-42-31-400-801	Windshield Wiper Arm - Installation (P/B 201)

C. Location Zones

Zone	Area
200	Upper Half of Fuselage

D. Procedure

SUBTASK 30-00-00-930-008

(1) Put an INOP placard on the wiper switch.

SUBTASK 30-00-00-020-005

(2) If the wiper blade obstructs forward vision do these steps:

(a) Do this task: Windshield Wiper Arm - Removal, TASK 30-42-31-000-801.

ECCN 9E991 BOEING PROPRIETARY - See title page for details

(b) Do this task: Windshield Wiper Arm - Installation, TASK 30-42-31-400-801.

NOTE: It is only necessary to put the wiper arm in the parked position and to apply the appropriate downward force on the wiper blade. The steps related to the sweep of the wiper arm are not necessary.

END OF TASK

TASK 30-00-00-440-806

11. MMEL 30-13 (DDPG) Restoration - Windshield Wiper System Inoperative

A. General

(1) This task puts the airplane back to its usual condition after operation with the windshield wiper system inoperative.

B. References

Reference	Title
30-42-31-820-802	Windshield Wiper Arm Position - Check/Adjustment (P/B 201)

C. Procedure

SUBTASK 30-00-00-810-006

(1) Correct the fault.

(a) Find the fault code or description of the fault that occurred.

(b) If you find a fault code, then do these steps:

1) Go to the Fault Code Index in the applicable chapter of the FIM and find the fault code.

NOTE: The first two digits of the fault code is the FIM chapter.

2) Find the task number on the same line as the fault code.

3) Go to the task in the FIM and do the steps in the task.

(c) If you find a description of the fault, then do these steps:

1) Go to the Observed Fault List at the beginning of the FIM and find the best description for the fault.

2) Find the task number on the same line as the fault description.

3) Go to the task in the FIM and do the steps in the task.

SUBTASK 30-00-00-820-001

(2) If the windshield wiper arm was adjusted in the preparation task, do this task: Windshield Wiper Arm Position - Check/Adjustment, TASK 30-42-31-820-802.

SUBTASK 30-00-00-440-006

(3) If the fault was repaired, remove the INOP placard from the windshield wiper switch.

END OF TASK

ECCN 9E991 BOEING PROPRIETARY - See title page for details

TASK 30-00-00-040-809

12. MMEL 30-17 (DDPG) Preparation - Cowl Anti-Ice Lights Inoperative

(Figure 904, Figure 905)

A. General

(1) This task gives the maintenance steps which prepare the airplane for flight with the Cowl Anti-Ice Lights Inoperative.

(2) The Cowl Anti-Ice Light can be deactivated by locking the associated Cowl Anti-Ice Valve open.

B. References

Reference	Title
71-11-02-010-801-F00	Open the Fan Cowl Panels (P/B 201)
71-11-02-410-801-F00	Close the Fan Cowl Panels (P/B 201)
78-31-00-010-801-F00	Open the Thrust Reverser (Selection) (P/B 201)
78-31-00-010-804-F00	Close the Thrust Reverser (Selection) (P/B 201)

C. Consumable Materials

Reference	Description	Specification
D00010	Compound - Thread Antiseize, High Temperature	MIL-PRF-907
D00667	Compound - Antiseize - Loctite C5-A Copper Based Anti-Seize (Replaces FEL-PRO C5-A)	MIL-PRF-907
D50188	Compound - Anti-Seize, Loctite Silver Grade	MIL-PRF-907

D. Prepare for the Procedure

SUBTASK 30-00-00-010-016

(1) Do this task: Open the Fan Cowl Panels, TASK 71-11-02-010-801-F00.

SUBTASK 30-00-00-010-017

(2) Do this task: Open the Thrust Reverser (Selection), TASK 78-31-00-010-801-F00.

SUBTASK 30-00-00-860-023

(3) Open these circuit breakers and install safety tags:

CAPT Electrical System Panel, P18-3

Row	Col	Number	Name
A	6	C00148	ANTI-ICE & RAIN ENG 1 & WING CONT
A	7	C01001	ANTI-ICE & RAIN ENG 1 COWL AI VALVE
B	6	C00149	ANTI-ICE & RAIN ENGINE 2 CONTROL

E. Put the Cowl Anti-Ice Valve Inoperative Open

SUBTASK 30-00-00-860-024

(1) To manually position the valve in the OPEN position, do these steps:

(a) Loosen the retaining screw on the manual locking assembly.

(b) Move the hex shaft to the OPEN position:

(c) Slide the locking assembly up the shaft into the recess in the cover plate.

(d) Tighten the retaining screw to 20 ±1 in-lb (2.26 ±0.11 N·m).

SUBTASK 30-00-00-020-007

(2) Disconnect, cap and stow the DP1302 ELECTRICAL CONNECTOR [3] on the ANTI-ICE PRESSURE SWITCH [4] Figure 904.

ECCN 9E991 BOEING PROPRIETARY - See title page for details

SUBTASK 30-00-00-860-025

(3) Close the HIGH STAGE VALVE [5] from the 9th stage bleed air source, Figure 905:

NOTE: Only one high stage valve may be locked in the closed position for dispatch. Dispatch with the opposite high stage valve inoperative under MMEL item 36-9 is not allowed.

(a) On the MANUAL OVERRIDE/POSITION INDICATOR [6], turn the manual override nut to align the position indicator with the CLOSED position.

(b) Loosen the bolt.

(c) Push in the lock knob to lock the high stage valve closed.

(d) Apply Loctite LB 8150 anti-seize compound, D50188, or Loctite C5-A compound, D00667, or compound, D00010, to the thread of the bolt.

(e) Tighten the bolt to 50 in-lb (5.65 N·m) - 55 in-lb (6.21 N·m) to hold the lock knob in its position.

F. Secure the Engine Access Panels

SUBTASK 30-00-00-860-026

(1) Remove the safety tags and close these circuit breakers:

CAPT Electrical System Panel, P18-3

Row	Col	Number	Name
A	6	C00148	ANTI-ICE & RAIN ENG 1 & WING CONT
A	7	C01001	ANTI-ICE & RAIN ENG 1 COWL AI VALVE
B	6	C00149	ANTI-ICE & RAIN ENGINE 2 CONTROL

SUBTASK 30-00-00-420-005

(2) Do this task: Close the Thrust Reverser (Selection), TASK 78-31-00-010-804-F00.

SUBTASK 30-00-00-420-004

(3) Do this task: Close the Fan Cowl Panels, TASK 71-11-02-410-801-F00.

END OF TASK

ECCN 9E991 BOEING PROPRIETARY - See title page for details

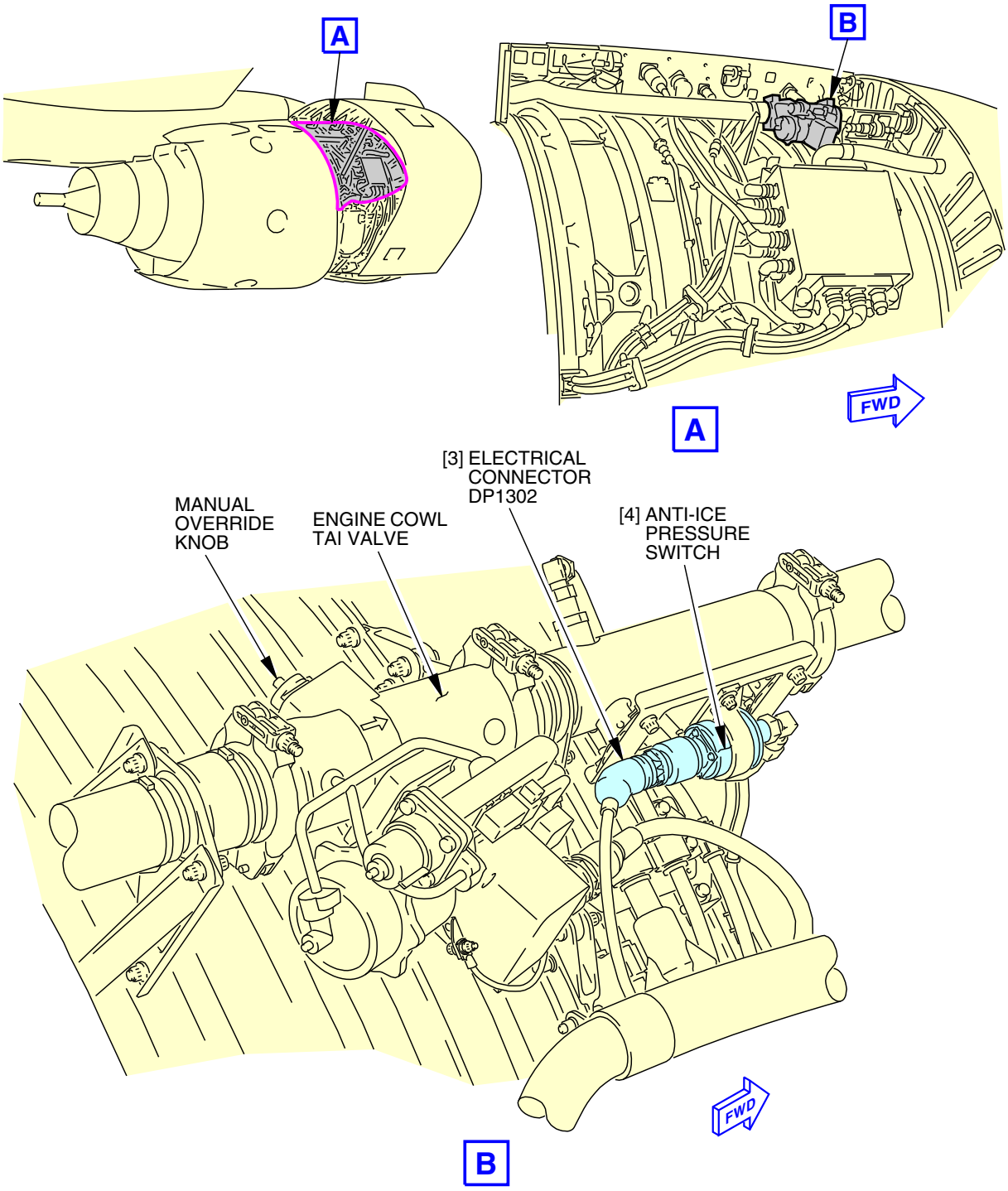

G99855 S0006573031_V6

Engine Cowl TAI Valve Deactivation
Figure 904/30-00-00-990-804

ECCN 9E991 BOEING PROPRIETARY - See title page for details

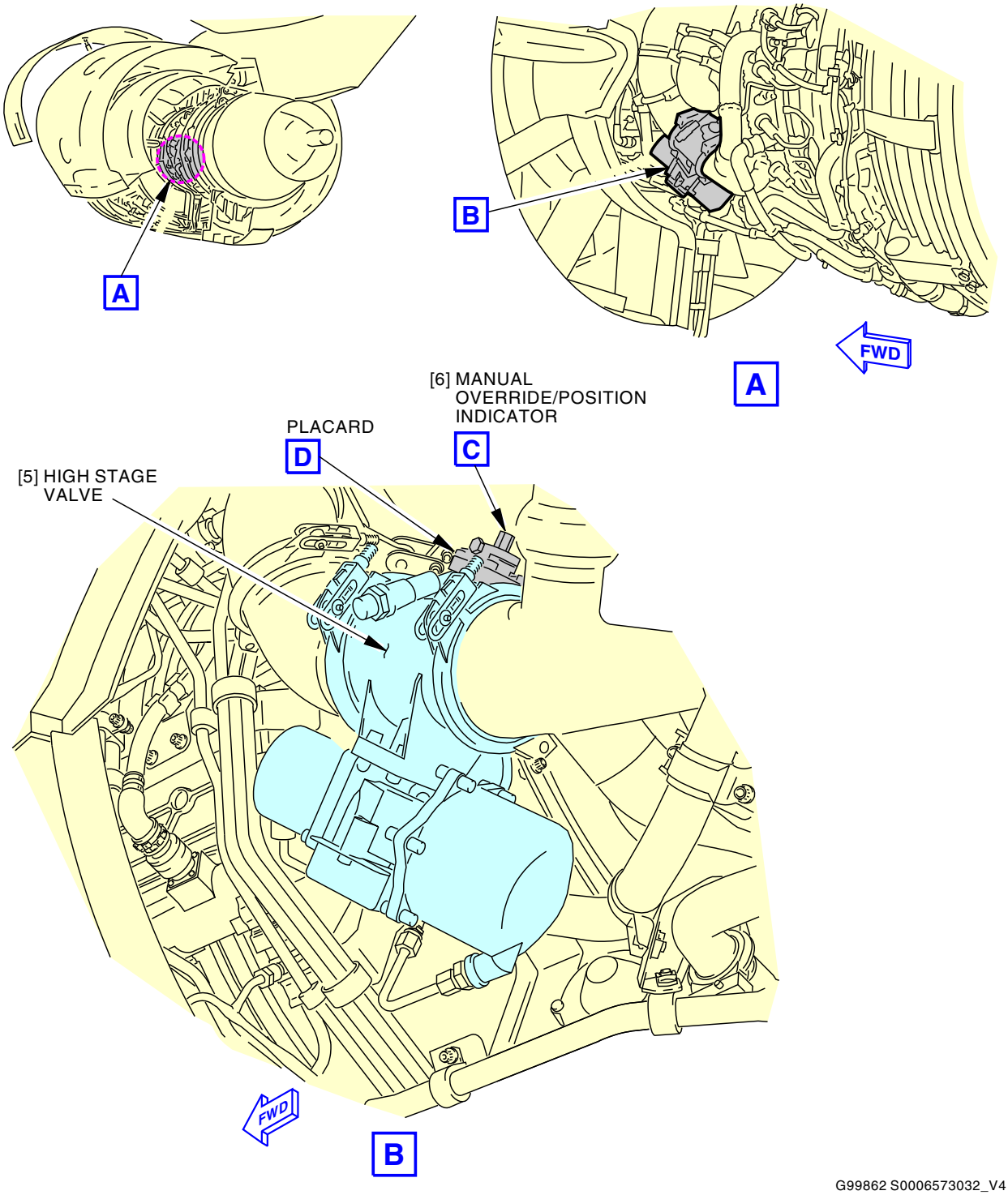

G99862 S0006573032_V4

High Stage Valve Deactivation
Figure 905/30-00-00-990-805 (Sheet 1 of 2)

ECCN 9E991 BOEING PROPRIETARY - See title page for details

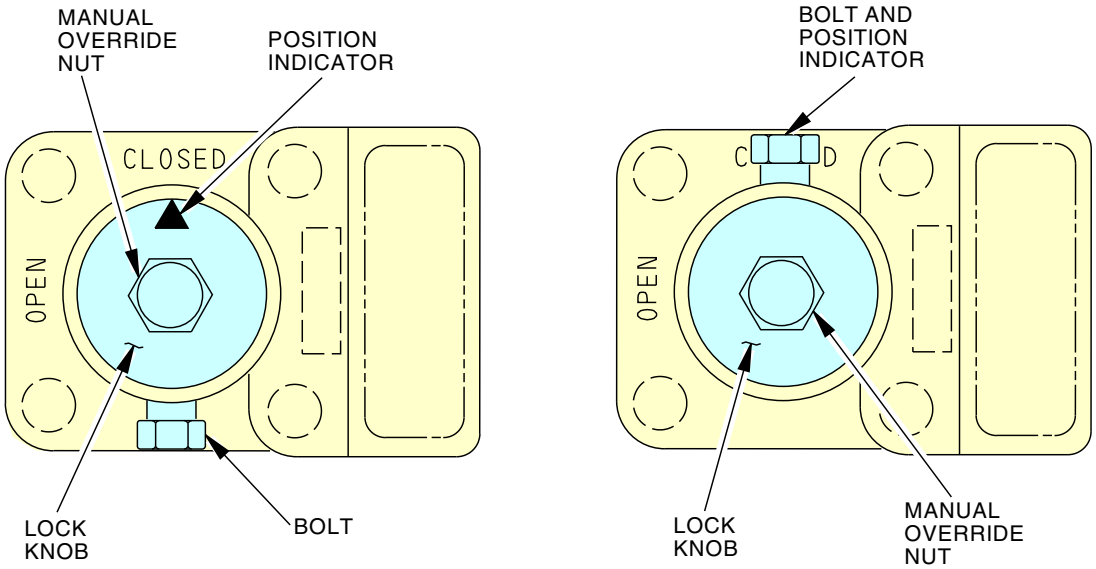

MANUAL OVERRIDE/ POSITION INDICATOR (POST-HONEYWELL-SB 36-1724)

C

MANUAL OVERRIDE/ POSITION INDICATOR (PRE-HONEYWELL-SB 36-1724)

C

WRENCH/LATCH/LOCK
WRENCH SHAFT HEX AS REQD
UNLOCK: LOOSEN KNOB BOLT-90˚CCW
LATCH: PUSH KNOB IN
UNLATCH: PULL KNOB OUT
LOCK: TIGHTEN KNOB BOLT

PLACARD

D

G99866 S0006573033_V2

High Stage Valve Deactivation
Figure 905/30-00-00-990-805 (Sheet 2 of 2)

ECCN 9E991 BOEING PROPRIETARY - See title page for details

TASK 30-00-00-440-809

13. MMEL 30-17 (DDPG) Restoration - Cowl Anti-Ice Lights Inoperative

A. General

(1) This task puts the airplane back to its usual condition after operation with the Cowl Anti-Ice Lights Inoperative.

B. References

Reference	Title
71-11-02-010-801-F00	Open the Fan Cowl Panels (P/B 201)
71-11-02-410-801-F00	Close the Fan Cowl Panels (P/B 201)
78-31-00-010-801-F00	Open the Thrust Reverser (Selection) (P/B 201)
78-31-00-010-804-F00	Close the Thrust Reverser (Selection) (P/B 201)

C. Consumable Materials

Reference	Description	Specification
D00010	Compound - Thread Antiseize, High Temperature	MIL-PRF-907
D00667	Compound - Antiseize - Loctite C5-A Copper Based Anti-Seize (Replaces FEL-PRO C5-A)	MIL-PRF-907
D50188	Compound - Anti-Seize, Loctite Silver Grade	MIL-PRF-907

D. Location Zones

Zone	Area
411	Engine 1 - Engine
421	Engine 2 - Engine

E. Prepare for the Procedure

SUBTASK 30-00-00-020-008

(1) Do this task: Open the Fan Cowl Panels, TASK 71-11-02-010-801-F00.

SUBTASK 30-00-00-020-009

(2) Do this task: Open the Thrust Reverser (Selection), TASK 78-31-00-010-801-F00.

SUBTASK 30-00-00-860-027

(3) Open these circuit breakers and install safety tags:

CAPT Electrical System Panel, P18-3

Row	Col	Number	Name
A	6	C00148	ANTI-ICE & RAIN ENG 1 & WING CONT
A	7	C01001	ANTI-ICE & RAIN ENG 1 COWL AI VALVE
B	6	C00149	ANTI-ICE & RAIN ENGINE 2 CONTROL

F. Procedure

SUBTASK 30-00-00-860-028

(1) Unlock the engine cowl anti-ice valve:

(a) Loosen the retaining screw on the manual locking assembly.

(b) Slide the locking assembly out of the cover plate recess.

(c) Tighten the retaining screw 20 ±1 in-lb (2.26 ±0.11 N·m).

SUBTASK 30-00-00-420-006

(2) Connect the electrical connector to the pressure switch.

ECCN 9E991 BOEING PROPRIETARY - See title page for details

SUBTASK 30-00-00-860-029

(3) If it is necessary, unlock the HIGH STAGE VALVE [5] from the 9th stage bleed air source, Figure 905:

(a) Loosen the bolt.

(b) Pull the lock knob out to unlock the high stage valve.

(c) Apply Loctite LB 8150 anti-seize compound, D50188 or Loctite C5-A compound, D00667 or compound, D00010 to the thread of the bolt.

(d) Tighten the bolt to 50 in-lb (5.65 N·m) to 55 in-lb (6.21 N·m) to hold the lock knob in its position.

SUBTASK 30-00-00-860-030

(4) Remove the safety tags and close these circuit breakers:

CAPT Electrical System Panel, P18-3

Row	Col	Number	Name
A	6	C00148	ANTI-ICE & RAIN ENG 1 & WING CONT
A	7	C01001	ANTI-ICE & RAIN ENG 1 COWL AI VALVE
B	6	C00149	ANTI-ICE & RAIN ENGINE 2 CONTROL

G. Secure the Engine Access Panels

SUBTASK 30-00-00-420-008

(1) Do this task: Close the Thrust Reverser (Selection), TASK 78-31-00-010-804-F00.

SUBTASK 30-00-00-420-007

(2) Do this task: Close the Fan Cowl Panels, TASK 71-11-02-410-801-F00.

H. Engine Cowl Anti-Ice Valve Repair

SUBTASK 30-00-00-810-009

(1) Correct the fault.

(a) Find the fault code or description of the fault that occured.

(b) If you find a fault code, then do these steps:

1) Go to the Fault Code Index in the applicable chapter of the FIM and find the fault code.

NOTE: The first two digits of the fault code is the FIM chapter.

2) Find the task number on the same line as the fault code.

3) Go to the task in the FIM and do the steps in the task.

(c) If you find a description of the fault, then do these steps:

1) Go to the Observed Fault List at the beginning of the FIM and find the best description for the fault.

2) Find the task number on the same line as the fault description.

3) Go to the task in the FIM and do the steps in the task.

END OF TASK

ECCN 9E991 BOEING PROPRIETARY - See title page for details

TASK 30-00-00-040-807

14. MMEL 30-18 (DDPG) Preparation - Alpha Vane Heater Light Inoperative

A. General

(1) This task gives the maintenance steps which prepare the airplane for flight with the alpha vane heater light inoperative.

B. Location Zones

Zone	Area
200	Upper Half of Fuselage

C. Procedure

SUBTASK 30-00-00-710-006

(1) Make sure the vane heater associated with the light operates.

(a) Make sure the covers are removed from all probe and vane heads.

WARNING DO NOT TOUCH THE VANE. THE VANE CAN GET VERY HOT. A HOT VANE CAN CAUSE INJURIES TO PERSONNEL.

CAUTION DO NOT OPERATE THE HEATER FOR A LONGER TIME THAN IS NECESSARY TO DO THE TEST. YOU CAN DECREASE THE LIFE OF THE HEATER.

(b) Put the applicable PITOT STATIC HEAT switch to the ON position.

(c) Make sure the applicable vane gets warm

(d) Put the applicable PITOT STATIC HEAT switch to the OFF or AUTO position.

SUBTASK 30-00-00-930-009

(2) Put an INOP placard on the affected sensor heater light.

——— END OF TASK ———

TASK 30-00-00-440-807

15. MMEL 30-18 (DDPG) Restoration - Alpha Vane Heater Light Inoperative

A. General

(1) This task puts the airplane back to its usual condition after operation with the alpha vane heater light inoperative.

B. Procedure

SUBTASK 30-00-00-810-007

(1) Correct the fault.

(a) Find the fault code or description of the fault that occurred.

(b) If you find a fault code, then do these steps:

1) Go to the Fault Code Index in the applicable chapter of the FIM and find the fault code.

NOTE: The first two digits of the fault code is the FIM chapter.

2) Find the task number on the same line as the fault code.

3) Go to the task in the FIM and do the steps in the task.

ECCN 9E991 BOEING PROPRIETARY - See title page for details

(c) If you find a description of the fault, then do these steps:

1) Go to the Observed Fault List at the beginning of the FIM and find the best description for the fault.

2) Find the task number on the same line as the fault description.

3) Go to the task in the FIM and do the steps in the task.

SUBTASK 30-00-00-440-007

(2) If the fault was repaired, remove the INOP placard from the affected light.

——— END OF TASK ———

TASK 30-00-00-040-808

16. MMEL 30-19 (DDPG) Preparation - Drain Mast Heaters Inoperative

A. General

(1) This task gives the maintenance steps that prepare the airplane for flight with the drain mast heater inoperative.

B. Turn Off Water Supply to Associated Components and Deactivate Inoperative Drain Mast Heaters

SUBTASK 30-00-00-210-008

(1) Close the associated water supply shutoff valves (lavatory, galley or fountain).

SUBTASK 30-00-00-040-002

(2) Deactivate inoperative drain mast heater(s):

(a) For an inoperative forward drain mast heater, disconnect, cap and stow wire 0243-20 from terminal block TB2201.

(b) For an inoperative aft drain mast heater, disconnect, cap and stow wire 0244-20 from terminal block TB2201.

SUBTASK 30-00-00-865-001

(3) Alternatively, both drain mast heaters may be deactivated by opening and collaring the following circuit breakers on the P-18 panel:

CAPT Electrical System Panel, P18-3

Row	Col	Number	Name
E	3	C00234	HEATERS DRAIN MAST GND
E	4	C00700	HEATERS DRAIN MAST AIR

——— END OF TASK ———

TASK 30-00-00-440-808

17. MMEL 30-19 (DDPG) Restoration - Drain Mast Heater Inoperative

A. General

(1) This task puts the airplane back to its usual condition after operation with the drain mast heater inoperative.

B. Turn On Water Supply to Associated Components and Activate Drain Mast Heaters

SUBTASK 30-00-00-420-009

(1) Activate inoperative drain mast heater(s):

(a) For an inoperative forward drain mast heater, connect wire 0243-20 to the terminal block TB2201.

ECCN 9E991 BOEING PROPRIETARY - See title page for details

(b) For an inoperative aft drain mast heater, connect wire 0244-20 to the terminal block TB2201.

SUBTASK 30-00-00-865-002

(2) If alternative deactivation method was used, remove the safety tags and close these circuit breakers:

CAPT Electrical System Panel, P18-3

Row	Col	Number	Name
E	3	C00234	HEATERS DRAIN MAST GND
E	4	C00700	HEATERS DRAIN MAST AIR

SUBTASK 30-00-00-010-015

(3) Open the water supply shutoff valves.

C. Drain Mast Heater Repair

SUBTASK 30-00-00-810-008

(1) Correct the fault.

(a) Find the fault code or description of the fault that occured.

(b) If you find a fault code, then do these steps:

1) Go to the Fault Code Index in the applicable chapter of the FIM and find the fault code.

NOTE: The first two digits of the fault code is the FIM chapter.

2) Find the task number on the same line as the fault code.

3) Go to the task in the FIM and do the steps in the task.

(c) If you find a description of the fault, then do these steps:

1) Go to the Observed Fault List at the beginning of the FIM and find the best description.

2) Find the task number on the same line as the fault description.

3) Go to the task in the FIM and do the steps in the task.

SUBTASK 30-00-00-440-008

(2) If the fault was repaired, remove the INOP placard from the affected light.

END OF TASK

ECCN 9E991 BOEING PROPRIETARY - See title page for details

WING THERMAL ANTI-ICING - MAINTENANCE PRACTICES

1. General

A. This procedure has these tasks:

(1) Wing thermal anti-icing - deactivation.

(2) Wing thermal anti-icing - activation.

TASK 30-11-00-040-801

2. Wing Thermal Anti-Icing - Deactivation

A. General

(1) This task will deactivate the power to the wing thermal anti-ice systems.

B. Location Zones

Zone	Area
212	Flight Compartment - Right
510	Subzone - Left Wing: Leading Edge, Fwd of Front Spar, Inbd of Strut and Nacelle Gap Cover Area
520	Subzone - Left Wing: Leading Edge, Fwd of Front Spar, Outboard of Strut and Nacelle Gap Cover Area
610	Subzone - Right Wing: Leading Edge, Forward of Front Spar, Inboard of Nacelle Strut, Including Gap Cover Area
620	Subzone - Right Wing: Leading Edge, Forward of Front Spar, Outboard of Nacelle Strut

C. Procedure

SUBTASK 30-11-00-020-001

(1) Open these circuit breakers and install safety tags:

CAPT Electrical System Panel, P18-3

Row	Col	Number	Name
A	1	C00146	ANTI-ICE & RAIN WING ANTI-ICE VALVE
A	6	C00148	ANTI-ICE & RAIN ENG 1 & WING CONT
A	7	C01001	ANTI-ICE & RAIN ENG 1 COWL AI VALVE
B	6	C00149	ANTI-ICE & RAIN ENGINE 2 CONTROL
B	7	C01002	ANTI-ICE & RAIN ENG 2 COWL AI VALVE

D. Wing Thermal Anti-Icing - Tryout

NOTE: This tryout is to make sure that the power to the wing thermal anti-ice systems is in a zero energy state.

SUBTASK 30-11-00-210-004

(1) Make sure the WING ANTI-ICE switch on the engine and wing anti-ice control panel (P5-11) is in the OFF position.

SUBTASK 30-11-00-210-005

(2) Make sure the L and R VALVE OPEN lights on the control panel are off.

SUBTASK 30-11-00-020-002

(3) Push and release the L VALVE OPEN and R VALVE OPEN light switches on the engine and wing anti-ice control panel (P5-11).

(a) Make sure that each light stays off.

ECCN 9E991 BOEING PROPRIETARY - See title page for details

SUBTASK 30-11-00-420-001

(4) Put the WING ANTI-ICE switch in the ON position.

(a) Make sure that each light stays off.

SUBTASK 30-11-00-020-003

(5) Put the WING ANTI-ICE switch in the OFF position.

SUBTASK 30-11-00-420-002

(6) Put the ENG ANTI-ICE 1 switch in the ON position.

(a) Make sure that the left COWL VALVE OPEN light stays off.

SUBTASK 30-11-00-020-004

(7) Put the ENG ANTI-ICE 1 switch in the OFF position.

SUBTASK 30-11-00-420-003

(8) Put the ENG ANTI-ICE 2 switch in the ON position.

(a) Make sure that the right COWL VALVE OPEN light stays off.

SUBTASK 30-11-00-020-005

(9) Put the ENG ANTI-ICE 2 switch in the OFF position.

SUBTASK 30-11-00-040-001

(10) Install DO-NOT-OPERATE tags on the WING ANTI-ICE, ENG ANTI-ICE 1 and ENG ANTI-ICE 2 switches on the engine and wing anti-ice control panel (P5-11).

END OF TASK

ECCN 9E991 BOEING PROPRIETARY - See title page for details

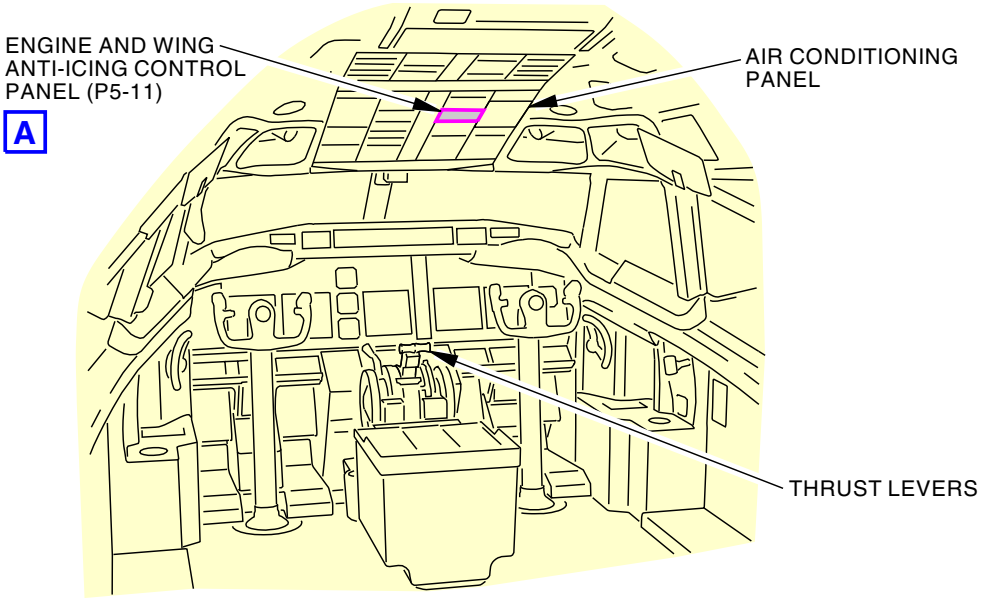

FLIGHT COMPARTMENT

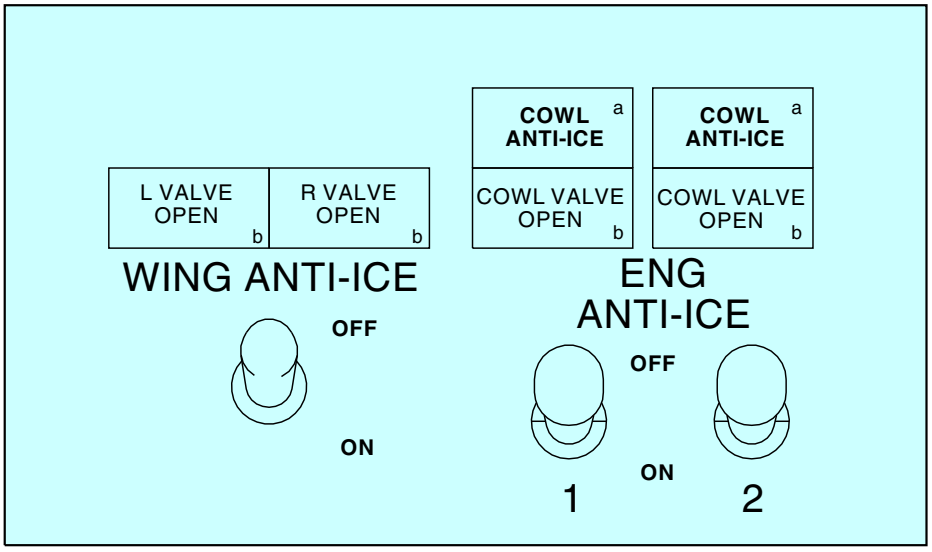

ENGINE AND WING ANTI-ICE CONTROL PANEL (P5-11)

A

G03363 S0006573045_V2

Wing Thermal Anti-Icing
Figure 201/30-11-00-990-802

ECCN 9E991 BOEING PROPRIETARY - See title page for details

TASK 30-11-00-440-801

3. Wing Thermal Anti-Icing - Activation

(Figure 201)

A. General

(1) This task will activate the power to the wing thermal anti-ice systems.

B. Location Zones

Zone	Area
212	Flight Compartment - Right
510	Subzone - Left Wing: Leading Edge, Fwd of Front Spar, Inbd of Strut and Nacelle Gap Cover Area
520	Subzone - Left Wing: Leading Edge, Fwd of Front Spar, Outboard of Strut and Nacelle Gap Cover Area
610	Subzone - Right Wing: Leading Edge, Forward of Front Spar, Inboard of Nacelle Strut, Including Gap Cover Area
620	Subzone - Right Wing: Leading Edge, Forward of Front Spar, Outboard of Nacelle Strut

C. Procedure

SUBTASK 30-11-00-440-001

(1) Remove the DO-NOT-OPERATE tags on the WING ANTI-ICE, ENG ANTI-ICE 1 and ENG ANTI-ICE 2 switches on the engine and wing anti-ice control panel (P5-11).

SUBTASK 30-11-00-420-004

(2) Remove the safety tags and close these circuit breakers:

CAPT Electrical System Panel, P18-3

Row	Col	Number	Name
A	1	C00146	ANTI-ICE & RAIN WING ANTI-ICE VALVE
A	6	C00148	ANTI-ICE & RAIN ENG 1 & WING CONT
A	7	C01001	ANTI-ICE & RAIN ENG 1 COWL AI VALVE
B	6	C00149	ANTI-ICE & RAIN ENGINE 2 CONTROL
B	7	C01002	ANTI-ICE & RAIN ENG 2 COWL AI VALVE

END OF TASK

ECCN 9E991 BOEING PROPRIETARY - See title page for details

WING THERMAL ANTI-ICING - ADJUSTMENT/TEST

1. General

A. This procedure has these tasks:

(1) Wing Thermal Anti-Icing - Operational Test

(2) Wing Anti-Icing Duct Leak Test

TASK 30-11-00-710-801

2. Wing Anti-Ice - Operational Test

(Figure 501)

A. General

(1) This test makes sure that the Wing Anti-Ice System is operating properly. Specific tests for wing anti-ice components are contained in other procedures.

B. References

Reference	Title
32-09-00-840-801	Prepare to Put the Airplane in the Air Mode (P/B 201)
32-09-00-860-801	Put the Airplane in the Air Mode (P/B 201)
32-09-00-860-802	Return the Airplane to the Ground Mode (P/B 201)

C. Tools/Equipment

Reference	Description
STD-4931	Jumper - Electrical
STD-6286	Jumper Wire

D. Location Zones

Zone	Area
212	Flight Compartment - Right
510	Subzone - Left Wing: Leading Edge, Fwd of Front Spar, Inbd of Strut and Nacelle Gap Cover Area
520	Subzone - Left Wing: Leading Edge, Fwd of Front Spar, Outboard of Strut and Nacelle Gap Cover Area
610	Subzone - Right Wing: Leading Edge, Forward of Front Spar, Inboard of Nacelle Strut, Including Gap Cover Area
620	Subzone - Right Wing: Leading Edge, Forward of Front Spar, Outboard of Nacelle Strut

E. Access Panels

Number	Name/Location
521AB	Outboard Leading Edge Blowout Door - Slat Station 20.04
521BB	Outboard Lower Fixed Leading Edge Access Panel - Slat Station 36.02
621AB	Outboard Leading Edge Blowout Door - Slat Station 20.04
621BB	Outboard Lower Fixed Leading Edge Access Panel - Slat Station 36.02

F. Prepare for the Test

SUBTASK 30-11-00-010-001

(1) Open these access panels:

Number	Name/Location
521AB	Outboard Leading Edge Blowout Door - Slat Station 20.04

ECCN 9E991 BOEING PROPRIETARY - See title page for details

(Continued)

Number	Name/Location
521BB	Outboard Lower Fixed Leading Edge Access Panel - Slat Station 36.02
621AB	Outboard Leading Edge Blowout Door - Slat Station 20.04
621BB	Outboard Lower Fixed Leading Edge Access Panel - Slat Station 36.02

SUBTASK 30-11-00-860-014

(2) Open this circuit breaker and install safety tag:

F/O Electrical System Panel, P6-1

Row	Col	Number	Name
D	13	C00120	WEATHER RADAR RT

SUBTASK 30-11-00-860-002

(3) Make sure that the thrust levers are in the IDLE position.

SUBTASK 30-11-00-860-003

(4) Make sure that the WING ANTI-ICE switch, on the P5-11 engine and wing anti-ice control panel, is in the OFF position.

SUBTASK 30-11-00-210-001

(5) Make sure that the VALVE OPEN light on the control panel is off.

SUBTASK 30-11-00-860-004

(6) Make sure that the wing anti-ice valves are closed.

NOTE: The wing anti-ice valve has a position indicator which shows whether the valve is open or closed.

G. Test the WING ANTI-ICE Switch and Indication

SUBTASK 30-11-00-860-005

(1) Push and release the L VALVE OPEN light switch, on the P5-11 engine and wing anti-ice control panel.

(a) Make sure that the light comes on then goes off.

SUBTASK 30-11-00-860-016

(2) Push and release the R VALVE OPEN light switch, on the P5-11 engine and wing anti-ice control panel.

(a) Make sure that the light comes on then goes off.

SUBTASK 30-11-00-860-006

CAUTION DO NOT KEEP THE WING TAI VALVE OPEN FOR MORE THAN 30 SECONDS WHEN THE PNEUMATIC SYSTEM IS PRESSURIZED. IF IT IS OPEN FOR MORE THAN 30 SECONDS, THE HOT AIR CAN CAUSE DAMAGE TO THE WING LEADING EDGE.

(3) Do this test to make sure that the engine and wing anti-ice panel commands the anti-ice valves open:

(a) Put the WING ANTI-ICE switch in the ON position.

(b) Make sure that the VALVE OPEN lights come on brightly for 1 to 6 seconds.

(c) Make sure that the VALVE OPEN lights become dim after 6 seconds.

(d) Make sure that the two wing anti-ice valves are open.

ECCN 9E991 BOEING PROPRIETARY - See title page for details

SUBTASK 30-11-00-720-001

(4) Do this test to make sure that the wing anti-ice valves close when the thrust lever is advanced:

(a) Put the left thrust lever in the fully advanced position.

1) Make sure that the VALVE OPEN lights become bright.

(b) Put the left thrust lever in the idle position.

1) Make sure that the VALVE OPEN lights become dim after 6 seconds.

(c) Put the right thrust lever in the fully advanced position.

1) Make sure that the VALVE OPEN lights become bright.

(d) Put the right thrust lever in the idle position.

1) Make sure that the VALVE OPEN lights become dim after 6 seconds.

SUBTASK 30-11-00-720-002

(5) Do this test to make sure that the wing anti-ice valves close when the left duct becomes too hot.

(a) Open this circuit breaker and install safety tag:

CAPT Electrical System Panel, P18-3

Row	Col	Number	Name
A	1	C00146	ANTI-ICE & RAIN WING ANTI-ICE VALVE

(b) Disconnect the electrical connector, D738 from the left wing ground thermal anti-ice switch.

(c) Connect a Jumper Wire, STD-6286 (or equivalent electrical jumper, STD-4931), between pins 1 and 2 of the electrical connector, D738.

(d) Remove the safety tag and close this circuit breaker:

CAPT Electrical System Panel, P18-3

Row	Col	Number	Name
A	1	C00146	ANTI-ICE & RAIN WING ANTI-ICE VALVE

(e) Make sure that the L and R VALVE OPEN lights come on brightly.

(f) Open this circuit breaker and install safety tag:

CAPT Electrical System Panel, P18-3

Row	Col	Number	Name
A	1	C00146	ANTI-ICE & RAIN WING ANTI-ICE VALVE

(g) Remove the Jumper Wire, STD-6286, from the electrical connector, D738.

(h) Connect the electrical connector, D738 to the left wing ground thermal anti-ice switch.

(i) Remove the safety tag and close this circuit breaker:

CAPT Electrical System Panel, P18-3

Row	Col	Number	Name
A	1	C00146	ANTI-ICE & RAIN WING ANTI-ICE VALVE

(j) Make sure that the L and R VALVE OPEN lights are dim.

SUBTASK 30-11-00-720-003

(6) Do this test to make sure that the wing anti-ice valves close when the right duct becomes too hot.

ECCN 9E991 BOEING PROPRIETARY - See title page for details

(a) Open this circuit breaker and install safety tag:

CAPT Electrical System Panel, P18-3

Row	Col	Number	Name
A	1	C00146	ANTI-ICE & RAIN WING ANTI-ICE VALVE

(b) Disconnect the electrical connector, D736 from the right wing ground thermal anti-ice switch.

(c) Connect a Jumper Wire, STD-6286, between pins 1 and 2 of the electrical connector, D736.

(d) Remove the safety tag and close this circuit breaker:

CAPT Electrical System Panel, P18-3

Row	Col	Number	Name
A	1	C00146	ANTI-ICE & RAIN WING ANTI-ICE VALVE

(e) Make sure that the L and R VALVE OPEN lights come on brightly.

(f) Open this circuit breaker and install safety tag:

CAPT Electrical System Panel, P18-3

Row	Col	Number	Name
A	1	C00146	ANTI-ICE & RAIN WING ANTI-ICE VALVE

(g) Remove the Jumper Wire, STD-6286, from the electrical connector, D736.

(h) Connect the electrical connector, D736 to the right wing ground thermal anti-ice switch.

(i) Remove the safety tag and close this circuit breaker:

CAPT Electrical System Panel, P18-3

Row	Col	Number	Name
A	1	C00146	ANTI-ICE & RAIN WING ANTI-ICE VALVE

(j) Make sure that the L and R VALVE OPEN lights are dim.

SUBTASK 30-11-00-720-004

(7) Do this check of the air mode transition:

WARNING

OBEY THE PROCEDURE THAT PUTS THE AIRPLANE IN THE AIR MODE. IF YOU DO THE PROCEDURE INCORRECTLY, INJURIES TO PERSONNEL, AND DAMAGE TO EQUIPMENT CAN OCCUR.

(a) Do this task: Prepare to Put the Airplane in the Air Mode, TASK 32-09-00-840-801.

(b) Do this task: Put the Airplane in the Air Mode, TASK 32-09-00-860-801.

1) Make sure that the WING ANTI-ICE switch goes to the OFF position.

2) Make sure that the VALVE OPEN lights are bright for 1 to 6 seconds and then go off.

(c) Put the WING ANTI-ICE switch in the ON position.

1) Make sure that the VALVE OPEN lights are bright for 1 to 6 seconds and then go dim.

(d) Return the airplane to the ground mode, do this task: Return the Airplane to the Ground Mode, TASK 32-09-00-860-802.

ECCN 9E991 BOEING PROPRIETARY - See title page for details

SUBTASK 30-11-00-860-007

(8) Do these steps to make sure that the engine and wing anti-ice panel commands the anti-ice valves closed:

(a) Put the WING ANTI-ICE switch in the OFF position.

(b) Make sure that the VALVE OPEN lights come on brightly for 1 to 6 seconds.

(c) Make sure that the VALVE OPEN lights go off after 6 seconds.

H. Put the Airplane Back to Its Usual Condition

SUBTASK 30-11-00-410-001

(1) Close these access panels:

Number	Name/Location
521AB	Outboard Leading Edge Blowout Door - Slat Station 20.04
521BB	Outboard Lower Fixed Leading Edge Access Panel - Slat Station 36.02
621AB	Outboard Leading Edge Blowout Door - Slat Station 20.04
621BB	Outboard Lower Fixed Leading Edge Access Panel - Slat Station 36.02

SUBTASK 30-11-00-860-015

(2) Remove the safety tag and close this circuit breaker:

F/O Electrical System Panel, P6-1

Row	Col	Number	Name
D	13	C00120	WEATHER RADAR RT

END OF TASK

ECCN 9E991 BOEING PROPRIETARY - See title page for details

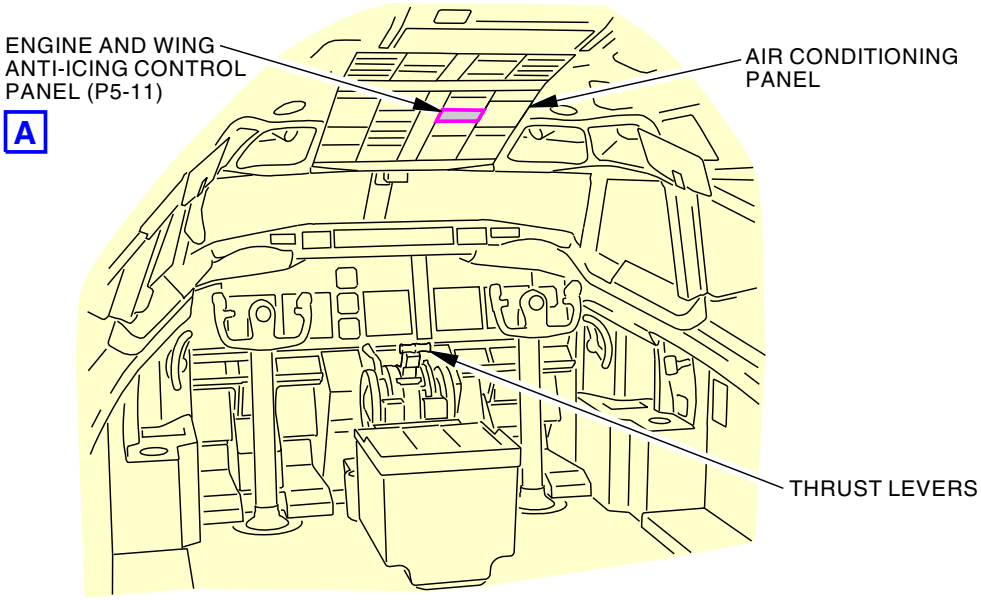

FLIGHT COMPARTMENT

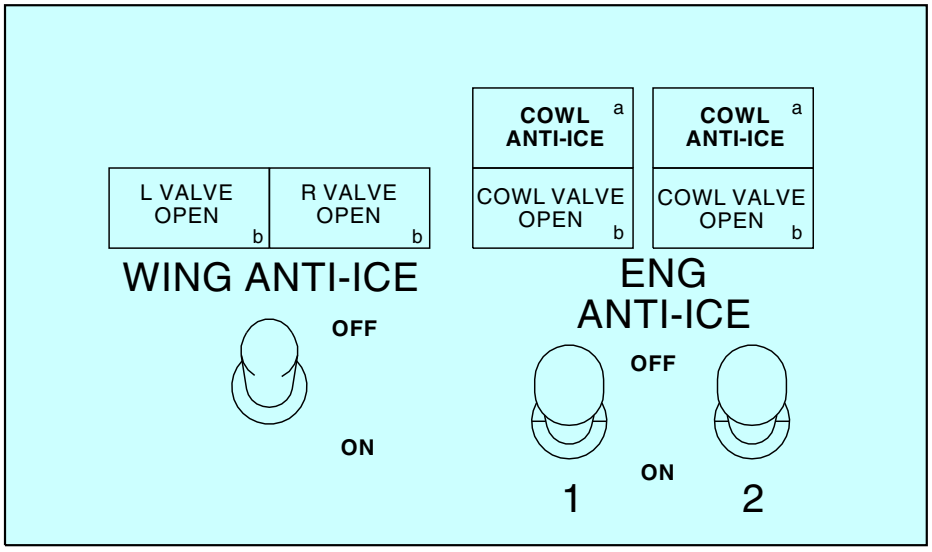

ENGINE AND WING ANTI-ICE CONTROL PANEL (P5-11)

A

G03363 S0006573045_V2

Wing Thermal Anti-Ice Test
Figure 501/30-11-00-990-801 (Sheet 1 of 2)

ECCN 9E991 BOEING PROPRIETARY - See title page for details

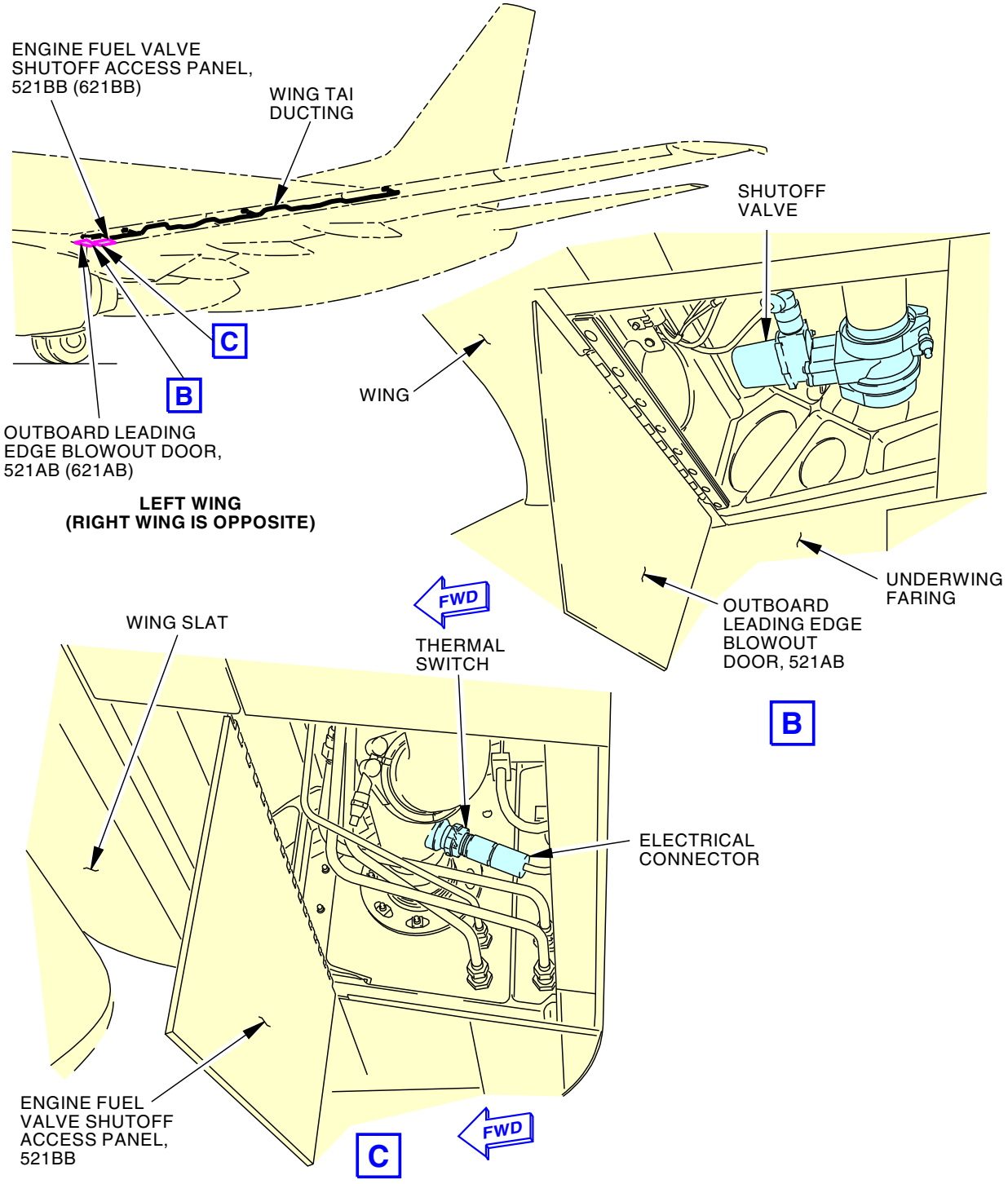

G03366 S0006573046_V4

Wing Thermal Anti-Ice Test
Figure 501/30-11-00-990-801 (Sheet 2 of 2)

ECCN 9E991 BOEING PROPRIETARY - See title page for details

TASK 30-11-00-790-801

3. Wing Anti-Icing Duct - Leak Test

(Figure 501)

A. General

(1) This test checks for leaks in the wing anti-icing ducts in the fixed leading edge of the wings, and in the telescoping ducts. The check includes a visual inspection of the ducts and connectors. The check also includes feeling for leaks at the clamp connectors and duct sleeves.

B. References

Reference	Title
36-00-00-860-802	Supply Pressure to the Pneumatic System with an External Ground Air Source (P/B 201)
36-00-00-860-803	Supply Pressure to the Pneumatic System with the APU (P/B 201)
36-00-00-860-806	Remove Pressure from the Pneumatic System (P/B 201)

C. Location Zones

Zone	Area
510	Subzone - Left Wing: Leading Edge, Fwd of Front Spar, Inbd of Strut and Nacelle Gap Cover Area
520	Subzone - Left Wing: Leading Edge, Fwd of Front Spar, Outboard of Strut and Nacelle Gap Cover Area
610	Subzone - Right Wing: Leading Edge, Forward of Front Spar, Inboard of Nacelle Strut, Including Gap Cover Area
620	Subzone - Right Wing: Leading Edge, Forward of Front Spar, Outboard of Nacelle Strut

D. Access Panels

Number	Name/Location
521AB	Outboard Leading Edge Blowout Door - Slat Station 20.04
621AB	Outboard Leading Edge Blowout Door - Slat Station 20.04

E. Prepare for the Procedure

SUBTASK 30-11-00-860-010

(1) Make sure that the thrust levers are in the IDLE position.

SUBTASK 30-11-00-010-002

(2) Open these access panels:

Number	Name/Location
521AB	Outboard Leading Edge Blowout Door - Slat Station 20.04
621AB	Outboard Leading Edge Blowout Door - Slat Station 20.04

F. Procedure

SUBTASK 30-11-00-210-002

(1) Do a visual check of the wing thermal anti-icing duct and fittings.

(a) Inspect for holes, cracks, and loose components.

SUBTASK 30-11-00-840-001

(2) Supply pneumatic pressure for the ducts.

ECCN 9E991 BOEING PROPRIETARY - See title page for details

(a) To use the APU to pressurize the TAI duct, do this task: Supply Pressure to the Pneumatic System with the APU, TASK 36-00-00-860-803.

(b) To use an external air supply to pressurize the TAI duct, do this task: Supply Pressure to the Pneumatic System with an External Ground Air Source, TASK 36-00-00-860-802.

(c) Put the BLEED 1 and 2 switches on the air conditioning panel to the OFF position.

(d) Put the L PACK and R PACK switches on the air conditioning panel to the OFF position.

(e) Make sure the ISOLATION VALVE switch is in the OPEN or the AUTO position.

SUBTASK 30-11-00-860-011

CAUTION DO NOT KEEP THE WING TAI VALVE OPEN FOR MORE THAN 30 SECONDS WHEN THE PNEUMATIC SYSTEM IS PRESSURIZED. IF IT IS OPEN FOR MORE THAN 30 SECONDS, THE HOT AIR CAN CAUSE DAMAGE TO THE WING LEADING EDGE.

(3) Put the WING ANTI-ICE switch to the ON position.

SUBTASK 30-11-00-200-001

(4) Do this check for leaks from the TAI duct:

WARNING DO NOT TOUCH THE TAI DUCT. THE DUCT CAN GET HOT AND INJURIES TO PERSONNEL AND DAMAGE TO EQUIPMENT CAN OCCUR.

(a) Move your hand near the TAI duct to feel for leaks.

1) Some leakage along duct seals and joints is satisfactory.

2) Leaks which can be felt 12 in. (305 mm) or more away are not satisfactory.

SUBTASK 30-11-00-720-006

(5) Put the WING ANTI-ICE switch to the OFF position.

G. Put the Airplane Back to Its Usual Condition

SUBTASK 30-11-00-860-012

(1) Do this task to remove pneumatic pressure from the ducts: Remove Pressure from the Pneumatic System, TASK 36-00-00-860-806.

SUBTASK 30-11-00-410-003

(2) Close these access panels:

Number	Name/Location
521AB	Outboard Leading Edge Blowout Door - Slat Station 20.04
621AB	Outboard Leading Edge Blowout Door - Slat Station 20.04

END OF TASK

ECCN 9E991 BOEING PROPRIETARY - See title page for details

WING THERMAL ANTI-ICING SHUTOFF VALVE - REMOVAL/INSTALLATION

1. General

A. This procedure has these tasks:

(1) Wing Thermal Anti-Icing Shutoff Valve Removal

(2) Wing Thermal Anti-Icing Shutoff Valve Installation.

TASK 30-11-11-000-801

2. Wing Thermal Anti-Icing Shutoff Valve Removal

(Figure 401)

A. General

(1) This task gives instructions to remove the Wing Thermal Anti-Icing Shutoff Valve.

B. References

Reference	Title
27-81-00-040-801	Leading Edge Flaps and Slats Deactivation (P/B 201)
36-00-00-860-806	Remove Pressure from the Pneumatic System (P/B 201)
SSM 30-11-11	System Schematics Manual
WDM 30-11-11	Wiring Diagram Manual

C. Location Zones

Zone	Area
520	Subzone - Left Wing: Leading Edge, Fwd of Front Spar, Outboard of Strut and Nacelle Gap Cover Area
620	Subzone - Right Wing: Leading Edge, Forward of Front Spar, Outboard of Nacelle Strut

D. Access Panels

Number	Name/Location
521AB	Outboard Leading Edge Blowout Door - Slat Station 20.04
521AT	Outbd Leading Edge - Gap Cover Access
621AB	Outboard Leading Edge Blowout Door - Slat Station 20.04
621AT	Outbd Leading Edge - Gap Cover Access

E. Prepare for the Removal

SUBTASK 30-11-11-040-001

> **WARNING** DO THE DEACTIVATION PROCEDURE FOR THE LE SLATS. THE LE SLATS CAN MOVE QUICKLY AND CAUSE INJURIES TO PERSONS AND DAMAGE TO EQUIPMENT.

(1) Deactivate the leading edge slats. To deactivate them, do this task: Leading Edge Flaps and Slats Deactivation, TASK 27-81-00-040-801.

SUBTASK 30-11-11-860-001

(2) Open this circuit breaker and install safety tag:

CAPT Electrical System Panel, P18-3

Row	Col	Number	Name
A	1	C00146	ANTI-ICE & RAIN WING ANTI-ICE VALVE

ECCN 9E991 BOEING PROPRIETARY - See title page for details

SUBTASK 30-11-11-860-011

(3) Do this task to remove pressure from the pneumatic system: Remove Pressure from the Pneumatic System, TASK 36-00-00-860-806.

SUBTASK 30-11-11-010-001

(4) Open the applicable wing access panels:

Number	Name/Location
521AB	Outboard Leading Edge Blowout Door - Slat Station 20.04
521AT	Outbd Leading Edge - Gap Cover Access
621AB	Outboard Leading Edge Blowout Door - Slat Station 20.04
621AT	Outbd Leading Edge - Gap Cover Access

F. Wing Thermal Anti-Icing Shutoff Valve Removal

(SSM 30-11-11, WDM 30-11-11)

SUBTASK 30-11-11-020-001

(1) Disconnect the electrical connector [1] from the valve [6].

SUBTASK 30-11-11-020-002

(2) Disconnect the bonding jumper [10] from the valve [6].

(a) Remove nut [7], washer [8], washer [11], and screw [12].

SUBTASK 30-11-11-020-003

(3) Remove the coupling [3] and coupling [4].

SUBTASK 30-11-11-020-004

(4) Remove the valve [6].

END OF TASK

ECCN 9E991 BOEING PROPRIETARY - See title page for details

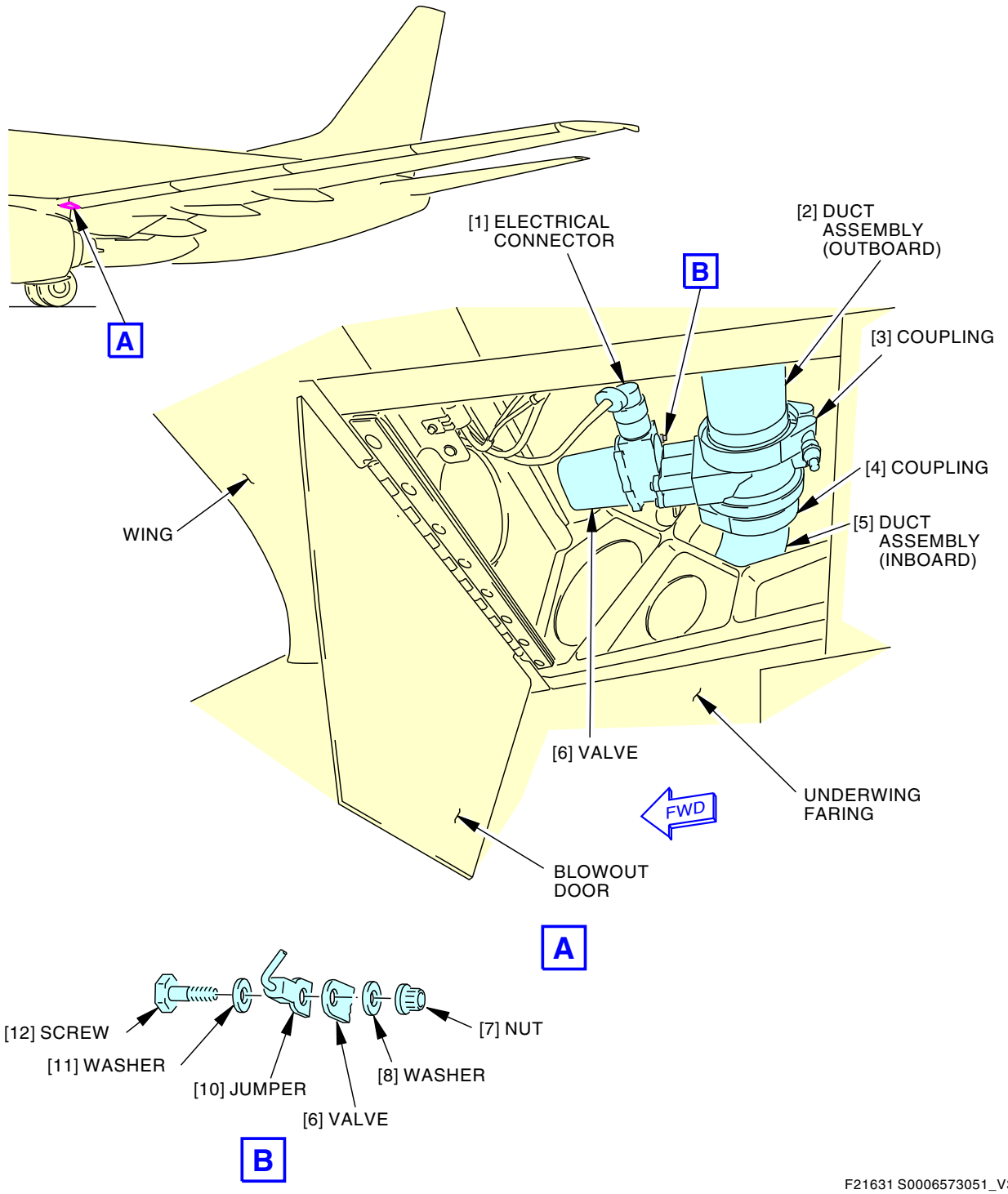

F21631 S0006573051_V3

Wing Thermal Anti-Icing Shutoff Valve Installation
Figure 401/30-11-11-990-801

ECCN 9E991 BOEING PROPRIETARY - See title page for details

TASK 30-11-11-400-801

3. Wing Thermal Anti-Icing Shutoff Valve Installation
(Figure 401)

A. General

(1) This task gives instructions to install the Wing Thermal Anti-Icing Shutoff Valve.

B. References

Reference	Title
24-22-00-860-814	Remove External Power (P/B 201)
27-81-00-040-801	Leading Edge Flaps and Slats Deactivation (P/B 201)
27-81-00-440-801	Leading Edge Flaps and Slats - Activation (P/B 201)
30-11-00-790-801	Wing Anti-Icing Duct - Leak Test (P/B 501)
30-11-11-710-801	Wing Thermal Anti Icing Shutoff Valve Test (P/B 501)
SSM 30-11-11	System Schematics Manual
SWPM 20-20-00	ELECTRICAL BONDING PROCESSES
WDM 30-11-11	Wiring Diagram Manual

C. Tools/Equipment

NOTE: When more than one tool part number is listed under the same "Reference" number, the tools shown are alternates to each other within the same airplane series. Tool part numbers that are replaced or non-procurable are preceded by "Opt:", which stands for Optional.

Reference	Description
COM-1550	Bonding Meter - Approved, Intrinsically Safe (Approved for use in Class I, Divisions I & II hazardous (classified) locations. Outside these hazardous locations, COM-614 can be used in lieu of COM-1550). Part #: 620LK Supplier: 1CRL2 Part #: M1 Supplier: 3AD17 Part #: M1B Supplier: 3AD17 Part #: T477W (C15292) Supplier: 06659

D. Consumable Materials

Reference	Description	Specification
B00130	Alcohol - Isopropyl	TT-I-735

E. Expendables/Parts

AMM Item	Description	AIPC Reference	AIPC Effectivity
4	Coupling	30-11-11-02-030	LOM ALL
6	Valve	30-11-11-02-035	LOM ALL
7	Nut	30-11-11-02-020	LOM ALL
8	Washer	30-11-11-02-015	LOM 402, 404, 406, 407, 411, 412, 415, 416, 420, 422-434, 437-447, 450-454, 465-999
		30-11-11-02-018	LOM 455-999
10	Jumper	30-11-11-02-025	LOM ALL

ECCN 9E991 BOEING PROPRIETARY - See title page for details

(Continued)

AMM Item	Description	AIPC Reference	AIPC Effectivity
11	Washer	30-11-11-02-015	LOM 402, 404, 406, 407, 411, 412, 415, 416, 420, 422-434, 437-447, 450-454, 465-999
		30-11-11-02-018	LOM 455-999
12	Screw	30-11-11-02-010	LOM ALL

F. Location Zones

Zone	Area
520	Subzone - Left Wing: Leading Edge, Fwd of Front Spar, Outboard of Strut and Nacelle Gap Cover Area
620	Subzone - Right Wing: Leading Edge, Forward of Front Spar, Outboard of Nacelle Strut

G. Access Panels

Number	Name/Location
521AB	Outboard Leading Edge Blowout Door - Slat Station 20.04
521AT	Outbd Leading Edge - Gap Cover Access
621AB	Outboard Leading Edge Blowout Door - Slat Station 20.04
621AT	Outbd Leading Edge - Gap Cover Access

H. Prepare for the Installation

SUBTASK 30-11-11-040-002

> **WARNING** DO THE DEACTIVATION PROCEDURE FOR THE LEADING EDGE SLATS. THE SLATS RETRACT QUICKLY. THIS CAN CAUSE INJURIES TO PERSONNEL OR DAMAGE TO EQUIPMENT.

(1) Make sure the leading edge slats are deactivated (TASK 27-81-00-040-801).

SUBTASK 30-11-11-860-012

(2) Make sure that this circuit breaker is open and has safety tag:

CAPT Electrical System Panel, P18-3

Row	Col	Number	Name
A	1	C00146	ANTI-ICE & RAIN WING ANTI-ICE VALVE

I. Wing Thermal Anti-Icing Shutoff Valve Installation

(SSM 30-11-11)

(WDM 30-11-11)

SUBTASK 30-11-11-420-001

(1) Put the valve [6] in its position.

SUBTASK 30-11-11-420-002

(2) Install the coupling [3] and coupling [4].

SUBTASK 30-11-11-420-004

(3) Do the following to connect the jumper [10]:

(a) Clean the bonding surfaces of the jumper, washers, and valve with alcohol, B00130, or equivalent (SWPM 20-20-00, Section 2E, Cleaning of Faying Surfaces).

ECCN 9E991 BOEING PROPRIETARY - See title page for details

1) Use Cleaning Procedure 5 to clean the surfaces.

(b) Install the screw [12], washer [8], washer [11] and nut [7].

(c) Use an intrinsically safe approved bonding meter, COM-1550, to make sure the resistance between the valve and the airplane structure is 0.0025 ohms or less.

SUBTASK 30-11-11-420-005

(4) Connect the electrical connector [1].

J. Wing Thermal Anti-Icing Shutoff Valve Installation Test

SUBTASK 30-11-11-860-002

(1) Remove the safety tag and close this circuit breaker:

CAPT Electrical System Panel, P18-3

Row	Col	Number	Name
A	1	C00146	ANTI-ICE & RAIN WING ANTI-ICE VALVE

SUBTASK 30-11-11-700-001

(2) Do this task: Wing Anti-Icing Duct - Leak Test, TASK 30-11-00-790-801 to test for duct leaks.

SUBTASK 30-11-11-710-001

(3) Do this task: Wing Thermal Anti Icing Shutoff Valve Test, TASK 30-11-11-710-801.

K. Put the Airplane Back to Its Usual Condition

SUBTASK 30-11-11-410-001

(1) Close the applicable wing panels,

Number	Name/Location
521AB	Outboard Leading Edge Blowout Door - Slat Station 20.04
521AT	Outbd Leading Edge - Gap Cover Access
621AB	Outboard Leading Edge Blowout Door - Slat Station 20.04
621AT	Outbd Leading Edge - Gap Cover Access

SUBTASK 30-11-11-440-001

(2) Reactivate the leading edge slats. To activate them, do this task: Leading Edge Flaps and Slats - Activation, TASK 27-81-00-440-801.

SUBTASK 30-11-11-860-003

(3) If it is necessary to remove electrical power, do this task: Remove External Power, TASK 24-22-00-860-814.

END OF TASK

ECCN 9E991 BOEING PROPRIETARY - See title page for details

WING THERMAL ANTI-ICING SHUTOFF VALVE - ADJUSTMENT/TEST

1. General

A. This procedure contains a task to test the wing thermal anti-icing shutoff valve.

TASK 30-11-11-710-801

2. Wing Thermal Anti Icing Shutoff Valve Test

(Figure 501)

A. General

(1) This test makes sure that the Wing Thermal Anti-Icing Shutoff Valve is operating properly.

B. References

Reference	Title
24-22-00-860-813	Supply External Power (P/B 201)
24-22-00-860-814	Remove External Power (P/B 201)

C. Location Zones

Zone	Area
212	Flight Compartment - Right
520	Subzone - Left Wing: Leading Edge, Fwd of Front Spar, Outboard of Strut and Nacelle Gap Cover Area
620	Subzone - Right Wing: Leading Edge, Forward of Front Spar, Outboard of Nacelle Strut

D. Access Panels

Number	Name/Location
521AB	Outboard Leading Edge Blowout Door - Slat Station 20.04
621AB	Outboard Leading Edge Blowout Door - Slat Station 20.04

E. Prepare for the Test

SUBTASK 30-11-11-860-004

(1) Do this task: Supply External Power, TASK 24-22-00-860-813.

SUBTASK 30-11-11-860-005

(2) Make sure that the thrust levers are in the IDLE position.

SUBTASK 30-11-11-010-002

(3) Open the applicable wing access panels:

Number	Name/Location
521AB	Outboard Leading Edge Blowout Door - Slat Station 20.04
621AB	Outboard Leading Edge Blowout Door - Slat Station 20.04

F. Procedure

SUBTASK 30-11-11-860-006

(1) Press and release the L VALVE OPEN and R VALVE OPEN light switches on the P5-11 panel.

(a) Make sure each light comes on then goes off.

SUBTASK 30-11-11-860-007

(2) Make sure the TAI valves open correctly.

(a) Put the WING ANTI-ICE switch in the ON position.

(b) Make sure the VALVE OPEN lights come on brightly for 1 to 6 seconds.

ECCN 9E991 BOEING PROPRIETARY - See title page for details

(c) Make sure the VALVE OPEN lights are on dimly after 6 seconds.

(d) Make sure the wing TAI valves are open.

SUBTASK 30-11-11-720-001

(3) Test the TAI valve indication for the left wing:

(a) Open this circuit breaker:

CAPT Electrical System Panel, P18-3

Row	Col	Number	Name
A	1	C00146	ANTI-ICE & RAIN WING ANTI-ICE VALVE

(b) Disconnect the electrical connector from the left wing TAI valve.

(c) Make sure the L VALVE OPEN light is on brightly and continuously.

(d) Reconnect the electrical connector to the TAI valve.

(e) Close this circuit breaker:

CAPT Electrical System Panel, P18-3

Row	Col	Number	Name
A	1	C00146	ANTI-ICE & RAIN WING ANTI-ICE VALVE

(f) Make sure the L VALVE OPEN is on dimly and continuously.

SUBTASK 30-11-11-720-002

(4) Test the TAI valve indication for the right wing:

(a) Open this circuit breaker:

CAPT Electrical System Panel, P18-3

Row	Col	Number	Name
A	1	C00146	ANTI-ICE & RAIN WING ANTI-ICE VALVE

(b) Disconnect the electrical connector from the right wing TAI valve.

(c) Make sure the R VALVE OPEN light is on brightly and continuously.

(d) Reconnect the electrical connector to the TAI valve.

(e) Close this circuit breaker:

CAPT Electrical System Panel, P18-3

Row	Col	Number	Name
A	1	C00146	ANTI-ICE & RAIN WING ANTI-ICE VALVE

(f) Make sure the R VALVE OPEN is on dimly and continuously.

SUBTASK 30-11-11-860-008

(5) Make sure the TAI valves close correctly.

(a) Put the WING ANTI-ICE switch in the OFF position.

(b) Make sure the VALVE OPEN lights come on brightly for 1 to 6 seconds.

(c) Make sure the VALVE OPEN lights go off after 6 seconds.

(d) Make sure the wing TAI valves are closed.

ECCN 9E991 BOEING PROPRIETARY - See title page for details

G. Put the Airplane in its Usual Condition

SUBTASK 30-11-11-410-002

(1) Close the applicable wing access panels:

Number	Name/Location
521AB	Outboard Leading Edge Blowout Door - Slat Station 20.04
621AB	Outboard Leading Edge Blowout Door - Slat Station 20.04

SUBTASK 30-11-11-860-009

(2) If electrical power is no longer necessary, do this task: Remove External Power, TASK 24-22-00-860-814.

——— END OF TASK ———

ECCN 9E991 BOEING PROPRIETARY - See title page for details

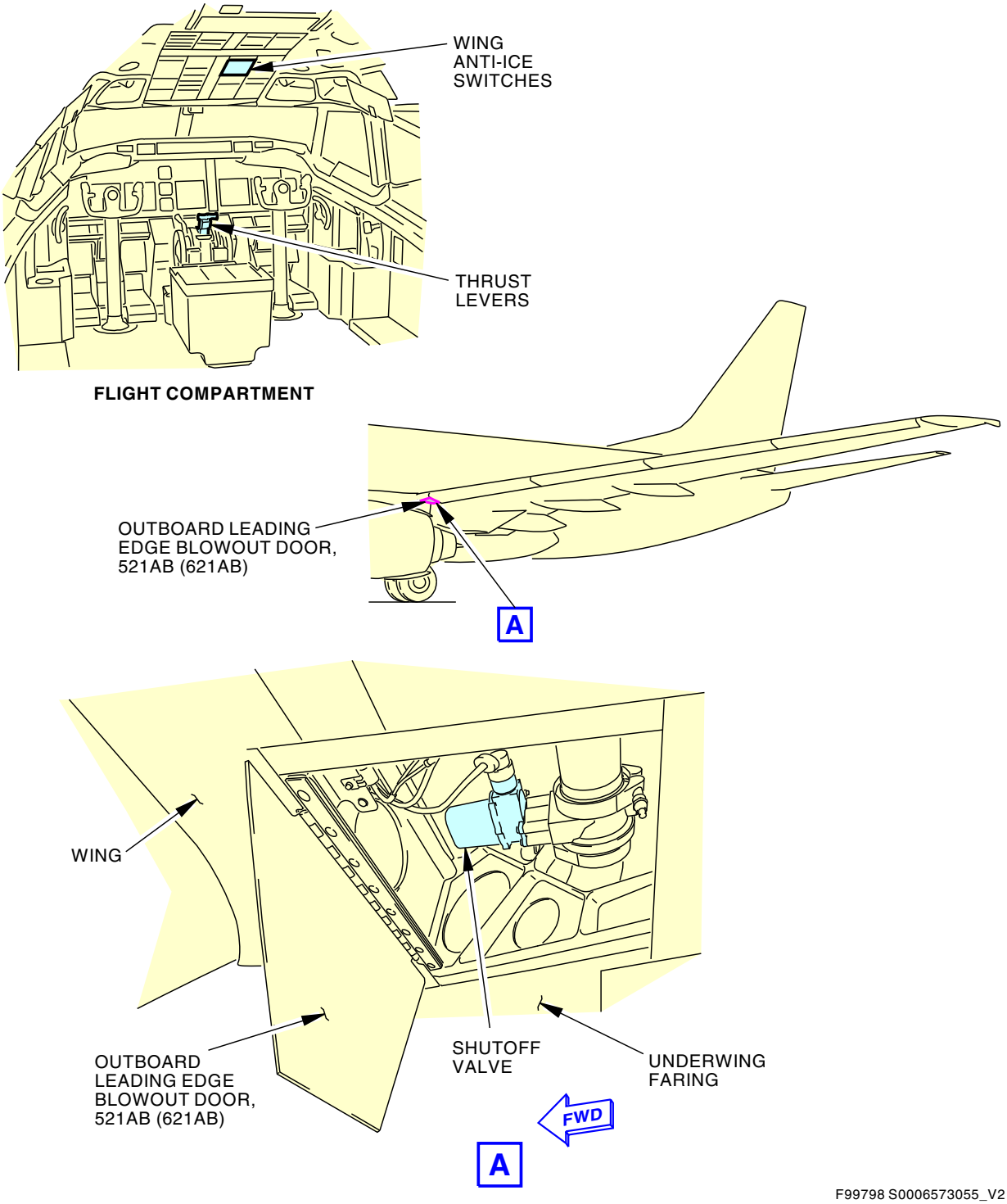

Wing Thermal Anti-Icing Shutoff Valve Test
Figure 501/30-11-11-990-802

ECCN 9E991 BOEING PROPRIETARY - See title page for details

GROUND WING THERMAL ANTI-ICING SOLENOID VALVE - REMOVAL/INSTALLATION

1. General

A. This procedure has these tasks:

(1) Ground Wing Thermal Anti-Icing Solenoid Valve Removal.

(2) Ground Wing Thermal Anti-Icing Solenoid Valve Installation.

TASK 30-11-12-000-801

2. Ground Wing Thermal Anti-Icing Solenoid Valve Removal

(Figure 401)

A. General

(1) This task gives instructions to remove the Ground Wing Thermal Anti-Icing Solenoid Valve.

B. References

Reference	Title
36-00-00-860-806	Remove Pressure from the Pneumatic System (P/B 201)
78-31-00-010-801-F00	Open the Thrust Reverser (Selection) (P/B 201)

C. Location Zones

Zone	Area
411	Engine 1 - Engine
421	Engine 2 - Engine

D. Prepare for the Removal

SUBTASK 30-11-12-860-001

(1) Open these circuit breakers and install safety tags:

CAPT Electrical System Panel, P18-3

Row	Col	Number	Name
A	1	C00146	ANTI-ICE & RAIN WING ANTI-ICE VALVE
A	6	C00148	ANTI-ICE & RAIN ENG 1 & WING CONT

SUBTASK 30-11-12-860-013

WARNING YOU MUST REMOVE THE PRESSURE FROM THE PNEUMATIC DUCTS BEFORE YOU REMOVE A PNEUMATIC SYSTEM COMPONENT. IF YOU DO NOT REMOVE THE PRESSURE FROM THE PNEUMATIC DUCTS, HOT HIGH PRESSURE AIR CAN CAUSE INJURIES TO PERSONS OR DAMAGE TO EQUIPMENT.

(2) Do this task: Remove Pressure from the Pneumatic System, TASK 36-00-00-860-806.

SUBTASK 30-11-12-010-005

WARNING DO THESE SPECIFIED TASKS IN THE CORRECT SEQUENCE BEFORE YOU OPEN THE THRUST REVERSER: RETRACT THE LEADING EDGE, DO THE DEACTIVATION PROCEDURES FOR THE LEADING EDGE AND THE THRUST REVERSER (FOR GROUND MAINTENANCE), AND OPEN THE FAN COWL PANELS. IF YOU DO NOT OBEY THE ABOVE SEQUENCE, INJURIES TO PERSONS AND DAMAGE TO EQUIPMENT CAN OCCUR.

(3) Do this task: Open the Thrust Reverser (Selection), TASK 78-31-00-010-801-F00.

ECCN 9E991 BOEING PROPRIETARY - See title page for details

E. Ground Wing Thermal Anti-Icing Solenoid Valve Removal

SUBTASK 30-11-12-020-001

(1) Remove the electrical connector [5].

SUBTASK 30-11-12-020-002

(2) Remove the tube [4].

SUBTASK 30-11-12-020-003

(3) Remove the union [3] and discard the seal [2].

SUBTASK 30-11-12-020-004

(4) Remove the bolts [6].

SUBTASK 30-11-12-020-005

(5) Remove the solenoid valve [7] and the spacers [1] or the bracket [8].

NOTE: The bracket [8] is fully interchangeable with three spacers [1].

END OF TASK

ECCN 9E991 BOEING PROPRIETARY - See title page for details

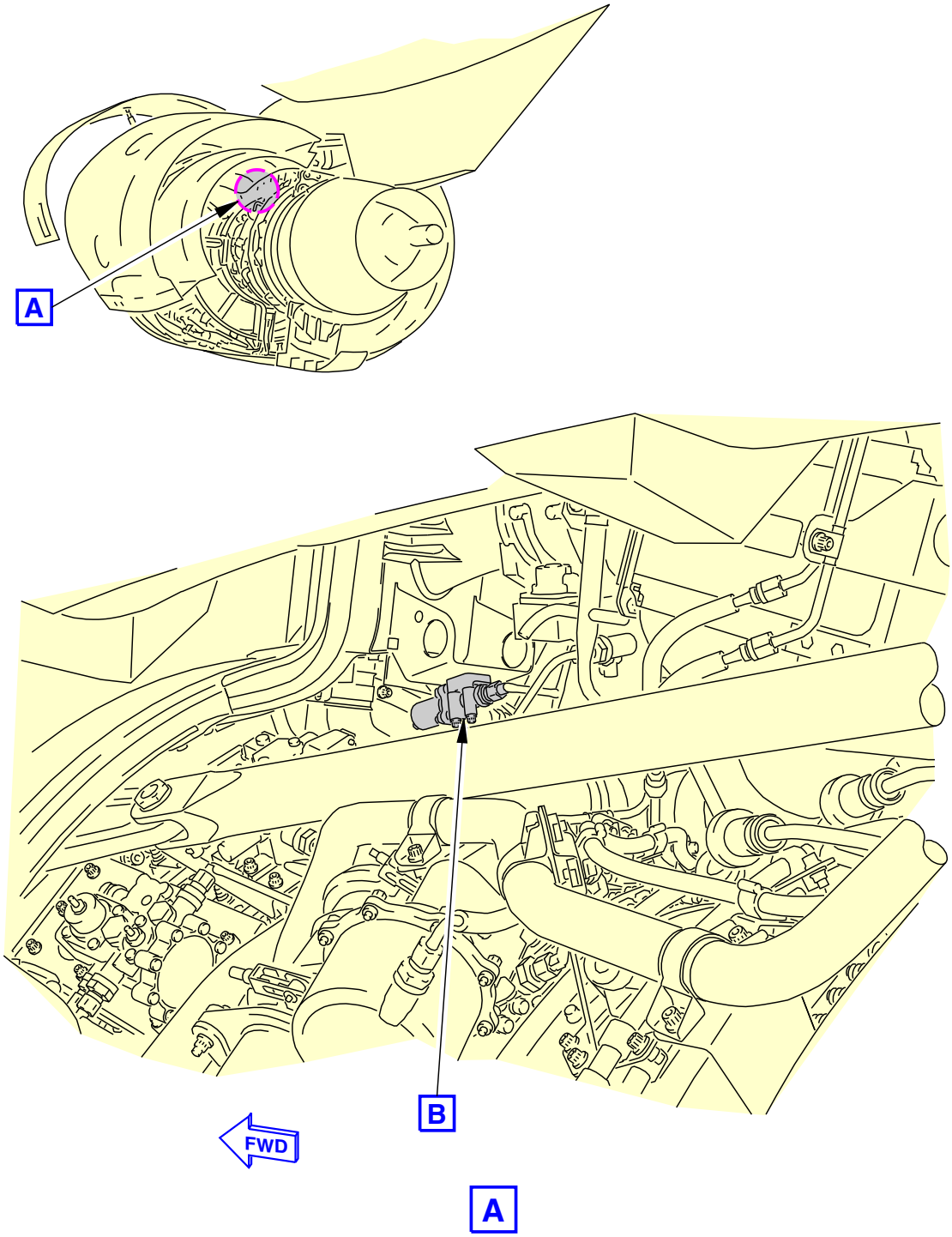

F23592 S0006573059_V2

Wing Thermal Anti-Ice Solenoid Valve Installation
Figure 401/30-11-12-990-801 (Sheet 1 of 2)

ECCN 9E991 BOEING PROPRIETARY - See title page for details

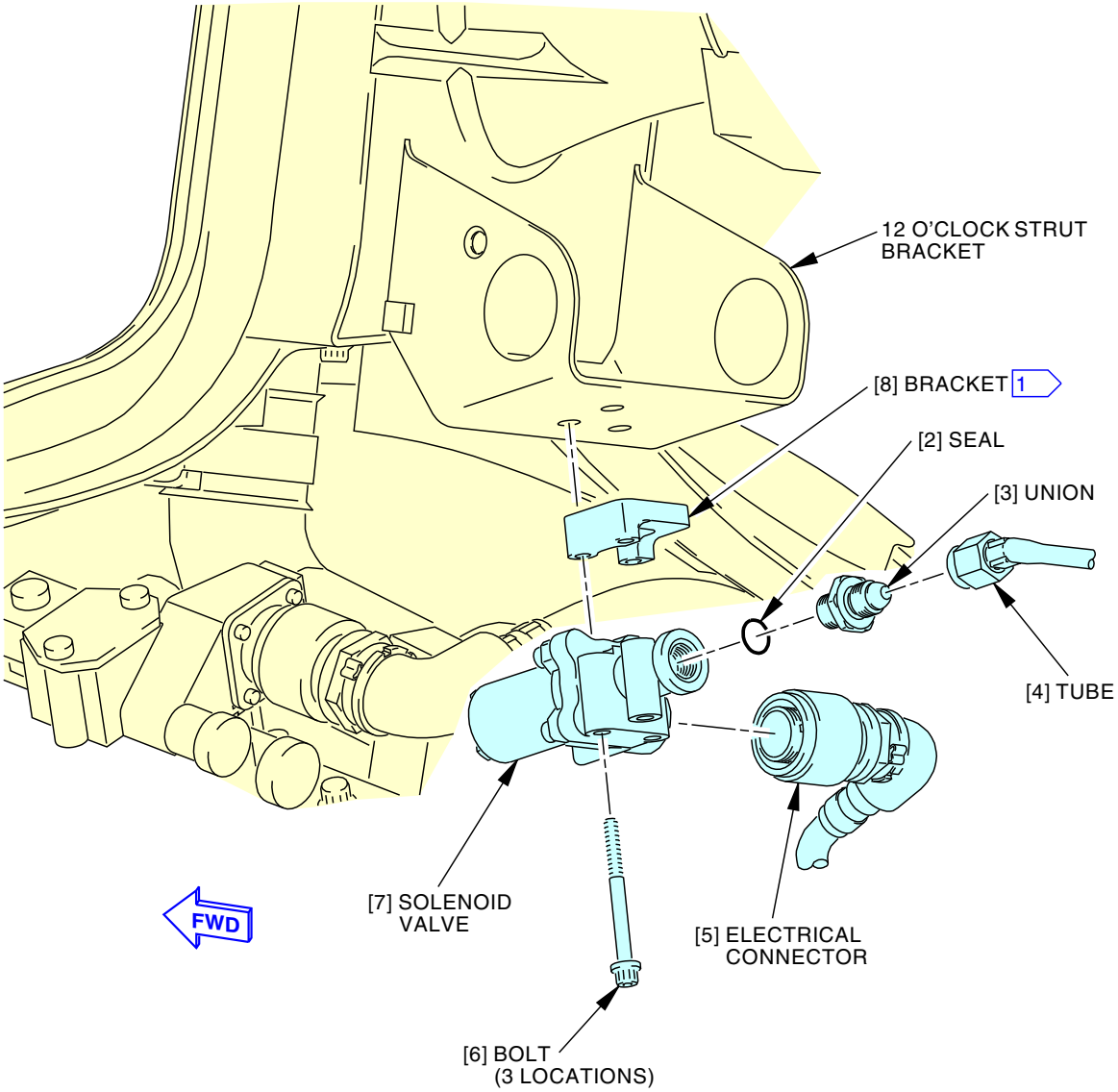

1 ONE BRACKET OR THREE SPACERS MAY BE USED.

F23714 S0006573060_V8

Wing Thermal Anti-Ice Solenoid Valve Installation
Figure 401/30-11-12-990-801 (Sheet 2 of 2)

ECCN 9E991 BOEING PROPRIETARY - See title page for details

TASK 30-11-12-400-801

3. Ground Wing Thermal Anti-Icing Solenoid Valve Installation

(Figure 401)

A. General

(1) This task gives instructions to install the ground wing thermal anti-icing solenoid valve.

B. References

Reference	Title
78-31-00-010-804-F00	Close the Thrust Reverser (Selection) (P/B 201)

C. Tools/Equipment

NOTE: When more than one tool part number is listed under the same "Reference" number, the tools shown are alternates to each other within the same airplane series. Tool part numbers that are replaced or non-procurable are preceded by "Opt:", which stands for Optional.

Reference	Description
COM-1550	Bonding Meter - Approved, Intrinsically Safe (Approved for use in Class I, Divisions I & II hazardous (classified) locations. Outside these hazardous locations, COM-614 can be used in lieu of COM-1550). Part #: 620LK Supplier: 1CRL2 Part #: M1 Supplier: 3AD17 Part #: M1B Supplier: 3AD17 Part #: T477W (C15292) Supplier: 06659

D. Consumable Materials

Reference	Description	Specification
D50004	Compound - Antiseize	BMS3-28

E. Expendables/Parts

AMM Item	Description	AIPC Reference	AIPC Effectivity
1	Spacer	30-11-12-01A-007	LOM ALL
2	Seal	36-11-51-02A-275	LOM ALL
6	Bolt	30-11-12-01A-005	LOM ALL
7	Solenoid valve	30-11-12-01A-025	LOM ALL
		30-11-12-01A-030	LOM ALL

F. Location Zones

Zone	Area
411	Engine 1 - Engine
421	Engine 2 - Engine

G. Prepare for the Installation

SUBTASK 30-11-12-860-012

(1) Make sure that these circuit breakers are open and have safety tags:

CAPT Electrical System Panel, P18-3

Row	Col	Number	Name
A	1	C00146	ANTI-ICE & RAIN WING ANTI-ICE VALVE
A	6	C00148	ANTI-ICE & RAIN ENG 1 & WING CONT

ECCN 9E991 BOEING PROPRIETARY - See title page for details

H. Ground Wing Thermal Anti-Icing Solenoid Valve Installation

SUBTASK 30-11-12-420-001

(1) Put the solenoid valve [7] on the strut bracket with the spacers [1] or the bracket [8].

NOTE: The bracket [8] is fully interchangeable with three spacers [1].

SUBTASK 30-11-12-420-002

(2) Install the solenoid valve [7] with the bolts [6].

SUBTASK 30-11-12-420-003

(3) Install the seal [2] and union [3].

(a) Apply compound, D50004, to the threads of the union [3].

(b) Torque the union [3] to 126 in-lb (14.2 N·m) - 154 in-lb (17.4 N·m).

SUBTASK 30-11-12-420-005

(4) Install the tube [4].

(a) Torque the tube [4] to 133 in-lb (15.0 N·m) - 147 in-lb (16.6 N·m).

SUBTASK 30-11-12-420-007

(5) Connect the electrical connector [5] to the solenoid valve [7].

I. Ground Wing Thermal Anti-Icing Solenoid Valve Installation Test

SUBTASK 30-11-12-860-002

(1) Remove the safety tags and close these circuit breakers:

CAPT Electrical System Panel, P18-3

Row	Col	Number	Name
A	1	C00146	ANTI-ICE & RAIN WING ANTI-ICE VALVE
A	6	C00148	ANTI-ICE & RAIN ENG 1 & WING CONT

SUBTASK 30-11-12-760-001

(2) Use intrinsically safe approved bonding meter, COM-1550, to make sure that the resistance between the solenoid valve and the airplane structure is 0.008 ohm (8 milliohms) or less.

SUBTASK 30-11-12-710-001

(3) Do this test of the solenoid valve:

NOTE: Two people are necessary to complete this test.

(a) While one person listens to the solenoid valve, put the WING ANTI-ICE switch in the ON position.

(b) If the solenoid valve makes a clicking sound, then the valve is open.

NOTE: The solenoid valve operates correctly.

(c) Put the WING ANTI-ICE switch in the OFF position.

J. Put the Airplane Back to Its Usual Condition

SUBTASK 30-11-12-410-004

WARNING OBEY THE INSTRUCTIONS IN THE PROCEDURE TO CLOSE THE THRUST REVERSERS. IF YOU DO NOT OBEY THE INSTRUCTIONS WHEN YOU CLOSE THE THRUST REVERSERS, INJURIES TO PERSONS OR DAMAGE TO EQUIPMENT CAN OCCUR.

(1) Do this task: Close the Thrust Reverser (Selection), TASK 78-31-00-010-804-F00.

END OF TASK

ECCN 9E991 BOEING PROPRIETARY - See title page for details

GROUND WING THERMAL ANTI-ICING SOLENOID VALVE - ADJUSTMENT/TEST

1. General
   A. This procedure contains scheduled maintenance task data.
   B. This procedure has a task to test the Ground Wing Thermal Anti-Ice (TAI) Solenoid Valve.

TASK 30-11-12-710-801

2. Ground Wing Thermal Anti-Icing (TAI) Solenoid Valve Test
(Figure 501)

NOTE: This procedure is a scheduled maintenance task.

A. General

(1) This test checks for the proper operation of the ground wing TAI solenoid valve [1] .

B. References

Reference	Title
32-09-00-840-801	Prepare to Put the Airplane in the Air Mode (P/B 201)
32-09-00-860-801	Put the Airplane in the Air Mode (P/B 201)
32-09-00-860-802	Return the Airplane to the Ground Mode (P/B 201)
36-00-00-860-805	Supply Pressure Upstream of the PRSOV (P/B 201)
36-00-00-860-806	Remove Pressure from the Pneumatic System (P/B 201)
78-31-00-010-801-F00	Open the Thrust Reverser (Selection) (P/B 201)
78-31-00-010-804-F00	Close the Thrust Reverser (Selection) (P/B 201)

C. Tools/Equipment

Reference	Description
STD-858	Tag - DO NOT OPERATE
STD-1115	Source - Nitrogen, 0-100 PSIG
STD-1198	Regulator - Pressure, 0-100 PSI with Pressure Gauge, 3/8 Inch ID Connections

D. Consumable Materials

Reference	Description	Specification
D00006	Compound - Antiseize, Pure Nickel Special - Never-Seez NSBT-8N/-16N	
D00010	Compound - Thread Antiseize, High Temperature	MIL-PRF-907

E. Location Zones

Zone	Area
510	Subzone - Left Wing: Leading Edge, Fwd of Front Spar, Inbd of Strut and Nacelle Gap Cover Area
520	Subzone - Left Wing: Leading Edge, Fwd of Front Spar, Outboard of Strut and Nacelle Gap Cover Area
610	Subzone - Right Wing: Leading Edge, Forward of Front Spar, Inboard of Nacelle Strut, Including Gap Cover Area
620	Subzone - Right Wing: Leading Edge, Forward of Front Spar, Outboard of Nacelle Strut

ECCN 9E991 BOEING PROPRIETARY - See title page for details

F. Prepare for the Test

SUBTASK 30-11-12-860-004

(1) Make sure that each engine start lever is in the CUTOFF position.

(a) Install DO NOT OPERATE tag, STD-858, on the each engine start lever.

SUBTASK 30-11-12-010-003

> **WARNING** DO THESE SPECIFIED TASKS IN THE CORRECT SEQUENCE BEFORE YOU OPEN THE THRUST REVERSER: RETRACT THE LEADING EDGE, DO THE DEACTIVATION OF THE LEADING EDGE AND THE THRUST REVERSER (FOR GROUND MAINTENANCE), AND OPEN THE FAN COWL PANELS. IF YOU DO NOT OBEY THE ABOVE SEQUENCE, INJURIES TO PERSONS AND DAMAGE TO EQUIPMENT CAN OCCUR.

(2) Do this task: Open the Thrust Reverser (Selection), TASK 78-31-00-010-801-F00.

SUBTASK 30-11-12-860-005

(3) Make sure that the thrust levers are in the IDLE position.

G. Ground Wing TAI Solenoid Valve Test

SUBTASK 30-11-12-480-001

(1) Do these steps to connect the test equipment to the engine:

(a) Disconnect the bleed air supply line [4] at the inlet tee at the supply pressure sense line [3] on the left of the engine.

(b) Connect the 0-100 PSIG nitrogen source, STD-1115, pressure regulator, STD-1198, and test line at the tee to the supply pressure sense line [3].

SUBTASK 30-11-12-710-002

(2) Do this test of the ground wing TAI solenoid valve [1]:

(a) Slowly increase the supply pressure to between 25 psig (1.76 kg/cm^2) and 30 psig (2.11 kg/cm^2).

(b) Make sure that the precooler control valve [2] goes closed.

(c) Put the WING ANTI-ICE switch on the P5-11 engine and wing anti-ice control panel in the ON position.

(d) Make sure that these actions occur:

1) Make sure that the precooler control valve [2] goes fully open, or within 30 degrees from fully open.

SUBTASK 30-11-12-720-002

(3) Do this check of the air mode transition:

> **WARNING** OBEY THE PROCEDURE THAT PUTS THE AIRPLANE IN THE AIR MODE. IF YOU DO THE PROCEDURE INCORRECTLY, INJURIES TO PERSONNEL, AND DAMAGE TO EQUIPMENT CAN OCCUR.

(a) Do this task: Prepare to Put the Airplane in the Air Mode, TASK 32-09-00-840-801.

(b) Do this task: Put the Airplane in the Air Mode, TASK 32-09-00-860-801.

1) Make sure that the precooler control valve [2] goes closed.

(c) Make sure that the WING ANTI-ICE switch goes to the OFF position.

(d) Put the WING ANTI-ICE switch to the ON position.

ECCN 9E991 BOEING PROPRIETARY - See title page for details

1) Make sure that the precooler control valve [2] remains closed.

(e) Put the WING ANTI-ICE switch in the OFF position.

(f) Decrease the supply pressure to 0 psig.

(g) Return the airplane to the ground mode, do this task: Return the Airplane to the Ground Mode, TASK 32-09-00-860-802.

SUBTASK 30-11-12-080-003

(4) Remove the supply pressure (Ps) test equipment and reinstall the bleed air supply line [4] to the supply pressure sense line [3] inlet tee as follows:

(a) Remove the 0-100 PSIG nitrogen source, STD-1115, pressure regulator, STD-1198, and test line from the supply pressure sense line [3].

(b) Connect the bleed air supply line [4] to the inlet tee of the supply pressure sense line [3] (View B, Figure 501).

1) Apply a light coat of compound, D00010, or Pure Nickel Special compound, D00006, on the threads of all fittings when connecting the sense lines.

CAUTION

USE TWO WRENCHES TO LOOSEN OR TIGHTEN THE FITTING. IF YOU TWIST THE TUBE OR FITTING, YOU CAN CAUSE DAMAGE TO THEM.

(c) Tighten the coupling nuts for the bleed air supply line [4] (Ps) to 133.0 in-lb (15.0 N·m) - 147.0 in-lb (17 N·m).

CAUTION

USE TWO WRENCHES TO LOOSEN OR TIGHTEN THE FITTING. IF YOU TWIST THE TUBE OR FITTING, YOU CAN CAUSE DAMAGE TO THEM.

(d) Back off the coupling nuts to decrease the torque.

CAUTION

USE TWO WRENCHES TO LOOSEN OR TIGHTEN THE FITTING. IF YOU TWIST THE TUBE OR FITTING, YOU CAN CAUSE DAMAGE TO THEM.

(e) Tighten the coupling nuts for the bleed air supply line [4] (Ps) to 133.0 in-lb (15.0 N·m) - 147.0 in-lb (17 N·m).

SUBTASK 30-11-12-780-001

(5) Do this task: Supply Pressure Upstream of the PRSOV, TASK 36-00-00-860-805.

SUBTASK 30-11-12-200-001

(6) Inspect and check for leaks at the bleed air supply line [4] at the inlet tee at the supply pressure sense line [3] on the left of the engine (Figure 501).

NOTE: No leakage is permitted at the sense line connections.

SUBTASK 30-11-12-780-002

(7) Do this task: Remove Pressure from the Pneumatic System, TASK 36-00-00-860-806.

ECCN 9E991 BOEING PROPRIETARY - See title page for details

H. Put the Airplane Back to Its Usual Condition.

SUBTASK 30-11-12-410-005

WARNING	OBEY THE INSTRUCTIONS IN THE PROCEDURE TO CLOSE THE THRUST REVERSERS. IF YOU DO NOT OBEY THE INSTRUCTIONS WHEN YOU CLOSE THE THRUST REVERSERS, INJURIES TO PERSONS OR DAMAGE TO EQUIPMENT CAN OCCUR.

(1) Do this task: Close the Thrust Reverser (Selection), TASK 78-31-00-010-804-F00.

SUBTASK 30-11-12-440-002

(2) Remove the DO-NOT-OPERATE tag from each engine start lever.

——— END OF TASK ———

ECCN 9E991 BOEING PROPRIETARY - See title page for details

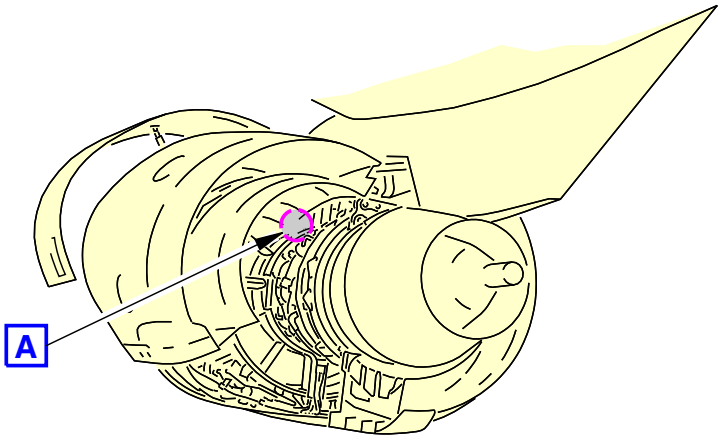

LEFT ENGINE
(RIGHT ENGINE IS EQUIVALENT)

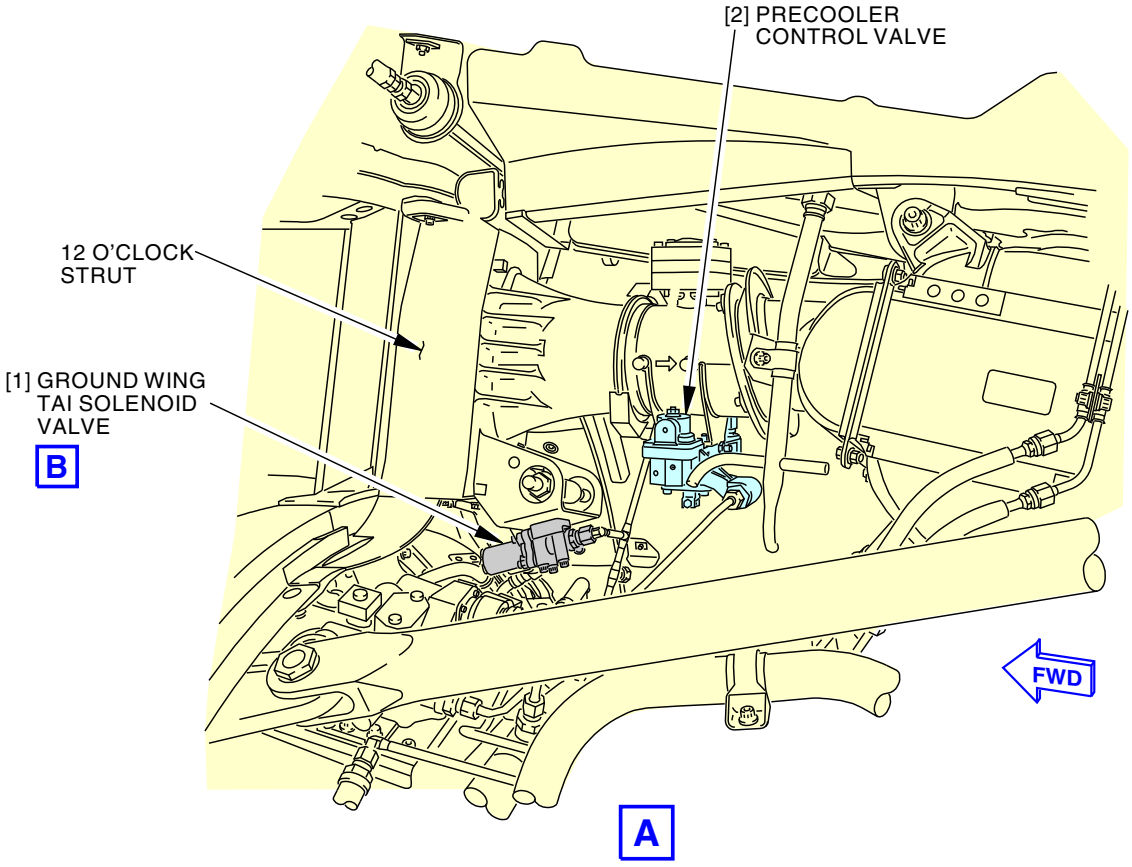

G28089 S0006573064_V3

Ground Wing Thermal Anti-Icing Solenoid Valve Test
Figure 501/30-11-12-990-802 (Sheet 1 of 2)

ECCN 9E991 BOEING PROPRIETARY - See title page for details

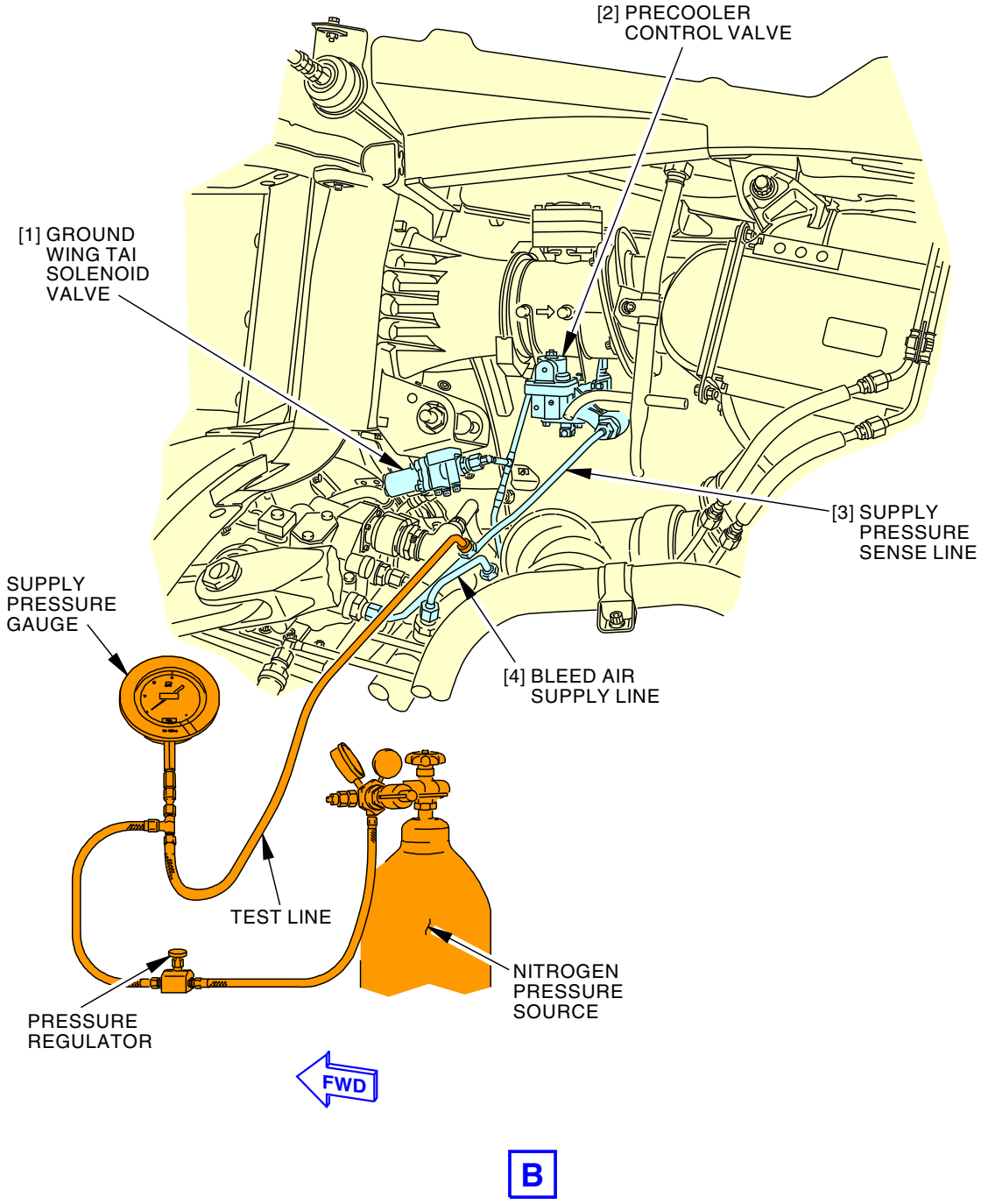

G67993 S0006573065_V4

Ground Wing Thermal Anti-Icing Solenoid Valve Test
Figure 501/30-11-12-990-802 (Sheet 2 of 2)

ECCN 9E991 BOEING PROPRIETARY - See title page for details

WING ANTI-ICING GROUND OVERHEAT THERMAL SWITCH - REMOVAL/INSTALLATION

1. General

A. This procedure has these tasks:

(1) Removal of the wing anti-icing ground overheat thermal switch.

(2) Installation of the wing anti-icing ground overheat thermal switch.

TASK 30-11-21-000-801

2. Wing Anti-Icing Ground Overheat Thermal Switch Removal

(Figure 401)

A. General

(1) This task gives instructions to remove the wing anti-icing ground overheat thermal switch.

B. References

Reference	Title
27-81-00-480-801	Leading Edge Flap and Slat Locks Installation (P/B 201)

C. Access Panels

Number	Name/Location
521BB	Outboard Lower Fixed Leading Edge Access Panel - Slat Station 36.02
621BB	Outboard Lower Fixed Leading Edge Access Panel - Slat Station 36.02

D. Prepare for the Removal

SUBTASK 30-11-21-860-001

> **WARNING**
> MAKE SURE TO INSTALL THE LEADING EDGE FLAP AND SLAT ACTUATORS LOCKOUT SET TO PREVENT ACCIDENTAL OPERATION OF THE LEADING EDGE FLAPS AND SLATS. THE LEADING EDGE FLAPS AND SLATS CAN MOVE QUICKLY. THIS CAN CAUSE INJURY TO PERSONS AND DAMAGE TO EQUIPMENT.

(1) Install the leading edge flaps and slats locks (TASK 27-81-00-480-801).

SUBTASK 30-11-21-860-002

(2) Open this circuit breaker and install safety tag:

CAPT Electrical System Panel, P18-3

Row	Col	Number	Name
A	1	C00146	ANTI-ICE & RAIN WING ANTI-ICE VALVE

SUBTASK 30-11-21-010-001

(3) Open the applicable access panels:

Number	Name/Location
521BB	Outboard Lower Fixed Leading Edge Access Panel - Slat Station 36.02
621BB	Outboard Lower Fixed Leading Edge Access Panel - Slat Station 36.02

E. Wing Anti-Icing Ground Overheat Thermal Switch Removal

SUBTASK 30-11-21-020-001

(1) Disconnect the electrical connector [4] from the thermal switch [3].

ECCN 9E991 BOEING PROPRIETARY - See title page for details

SUBTASK 30-11-21-020-007

(2) Remove the lockwire [1] from the thermal switch [3].

SUBTASK 30-11-21-020-002

(3) Remove the thermal switch [3].

(a) Discard the o-ring [2].

END OF TASK

ECCN 9E991 BOEING PROPRIETARY - See title page for details

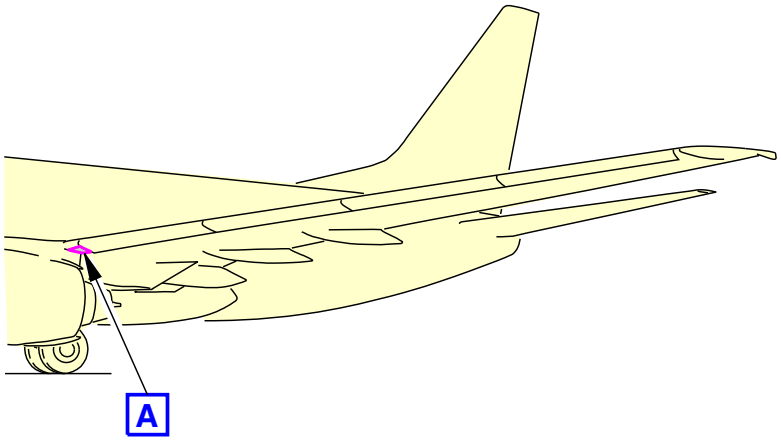

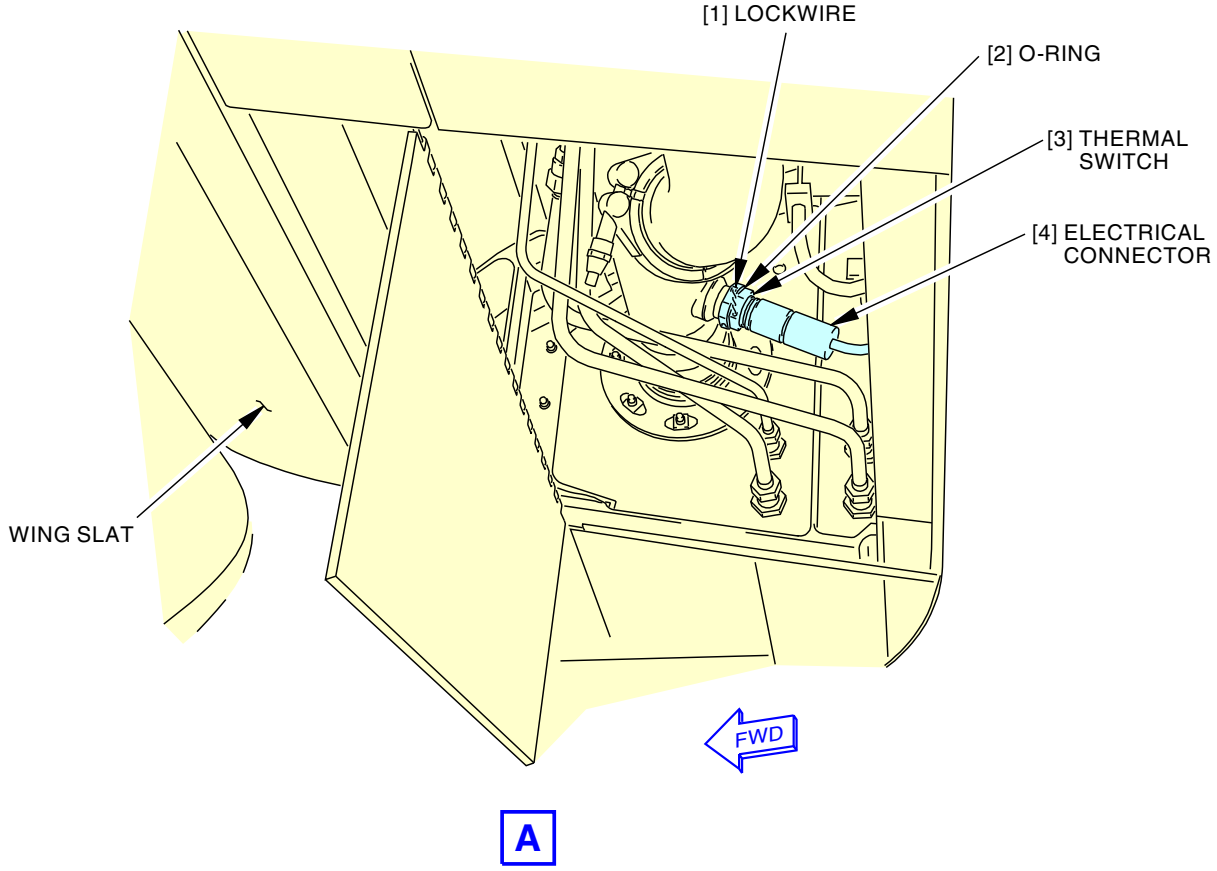

F33641 S0006573070_V3

Wing Anti-Icing Ground Overheat Thermal Switch Installation
Figure 401/30-11-21-990-801

ECCN 9E991 BOEING PROPRIETARY - See title page for details

TASK 30-11-21-400-801

3. Wing Anti-Icing Ground Overheat Thermal Switch Installation

(Figure 401)

A. General

(1) This task gives instructions to install the Wing Anti-Icing Ground Overheat Thermal Switch.

B. References

Reference	Title
24-22-00-860-813	Supply External Power (P/B 201)
24-22-00-860-814	Remove External Power (P/B 201)
27-81-00-080-801	Leading Edge Flap and Slat Locks Removal (P/B 201)

C. Consumable Materials

Reference	Description	Specification
D00010	Compound - Thread Antiseize, High Temperature	MIL-PRF-907

D. Expendables/Parts

AMM Item	Description	AIPC Reference	AIPC Effectivity
2	O-ring	30-11-21-02-010	LOM ALL
3	Thermal switch	30-11-21-02-015	LOM ALL

E. Access Panels

Number	Name/Location
521BB	Outboard Lower Fixed Leading Edge Access Panel - Slat Station 36.02
621BB	Outboard Lower Fixed Leading Edge Access Panel - Slat Station 36.02

F. Wing Anti-Icing Ground Overheat Thermal Switch Installation

SUBTASK 30-11-21-420-001

(1) Put compound, D00010, on the threads of the overheat thermal switch [3].

SUBTASK 30-11-21-420-002

(2) Install the o-ring [2] on the thermal switch [3].

SUBTASK 30-11-21-400-001

(3) Install the thermal switch [3] into the duct boss.

(a) Torque the thermal switch [3] to 90 ±10 in-lb (10 ±1 N·m).

SUBTASK 30-11-21-420-004

(4) Install the lockwire [1] on the thermal switch [3].

SUBTASK 30-11-21-420-005

(5) Connect the electrical connector [4] to the thermal switch [3].

NOTE: If you will do the Test of the Thermal Switch Circuit procedure, do not connect the electrical connector until after the test.

G. Wing Anti-Icing Ground Overheat Thermal Switch Installation Test

SUBTASK 30-11-21-860-003

(1) Supply electrical power to the airplane (TASK 24-22-00-860-813).

ECCN 9E991 BOEING PROPRIETARY - See title page for details

SUBTASK 30-11-21-860-004

(2) Remove the safety tag and close this circuit breaker:

CAPT Electrical System Panel, P18-3

Row	Col	Number	Name
A	1	C00146	ANTI-ICE & RAIN WING ANTI-ICE VALVE

SUBTASK 30-11-21-020-005

(3) Remove the electrical connector [4] from the thermal switch [3].

SUBTASK 30-11-21-710-001

(4) Do a test of the thermal switch circuit:

(a) Set the WING ANTI-ICE switch (P5 overhead panel) to ON.

(b) Look at the left and right wing anti-ice valves to make sure that they are open.

(c) Use a jumper to connect the pins 1 and 2 of the switch connector (D738 - left wing, D736 - Right wing).

(d) Make sure that the L VALVE OPEN and R VALVE OPEN lights come on brightly.

(e) Look at the left and right wing anti-ice valves to make sure that they are closed.

(f) Remove the jumper from the thermal switch connector.

(g) Make sure that the L VALVE OPEN and the R VALVE OPEN lights come on brightly for 1 to 6 seconds and then become dim.

(h) Look at the left and right wing anti-ice valves to make sure that they are open.

(i) Set the WING ANTI-ICE switch to OFF.

SUBTASK 30-11-21-420-006

(5) Connect the electrical connector [4] to the thermal switch [3].

H. Put the Airplane Back to Its Usual Condition

SUBTASK 30-11-21-410-001

(1) Close the applicable panels:

Number	Name/Location
521BB	Outboard Lower Fixed Leading Edge Access Panel - Slat Station 36.02
621BB	Outboard Lower Fixed Leading Edge Access Panel - Slat Station 36.02

SUBTASK 30-11-21-840-001

(2) Remove the leading edge flaps and slats locks (TASK 27-81-00-080-801).

SUBTASK 30-11-21-840-002

(3) If electrical power is not necessary, do this task: Remove External Power, TASK 24-22-00-860-814.

END OF TASK

ECCN 9E991 BOEING PROPRIETARY - See title page for details

WING ANTI-ICE TELESCOPING DUCT - REMOVAL/INSTALLATION

1. General

A. This procedure has these tasks:

(1) Wing Anti-Ice Telescoping Duct Seals Removal

(2) Wing Anti-Ice Telescoping Duct Seals Installation

(3) Wing Anti-Ice Telescoping Duct Removal

(4) Wing Anti-Ice Telescoping Duct Installation.

B. The telescoping ducts connect the wing TAI manifold in the wing leading edge to each of the slat spray tubes. Each telescoping duct assembly has an inner and an outer duct. The inner duct attaches to the wing manifold and the outer duct attaches to the slat spray duct. There are seals between the inner and outer ducts and seals where the inner duct swivel in the fixed leading edge. The installation of all the telescoping ducts and seals are similar.

C. For this procedure, the leading edge slats are installed in the extended position. To replace the seals with the slat removed, some steps of this procedure are not necessary.

TASK 30-11-31-000-801

2. Wing Anti-Ice Telescoping Duct Seal Removal

(Figure 401)

A. General

(1) This task gives instructions to remove the Wing Anti-Ice Telescoping Duct Seal.

B. References

Reference	Title
27-81-00-480-801	Leading Edge Flap and Slat Locks Installation (P/B 201)
57-41-02-000-801	Leading Edge Access Panel Removal (P/B 201)

C. Location Zones

Zone	Area
520	Subzone - Left Wing: Leading Edge, Fwd of Front Spar, Outboard of Strut and Nacelle Gap Cover Area
620	Subzone - Right Wing: Leading Edge, Forward of Front Spar, Outboard of Nacelle Strut

D. Access Panels

Number	Name/Location
521DB	Lower Leading Edge Access Panel - Slat Station 71.38
521KB	Lower Leading Edge Access Panel - Slat Station 188.12
521RB	Lower Leading Edge Access Panel - Slat Station 307.75
621DB	Lower Leading Edge Access Panel - Slat Station 71.38
621JB	Lower Leading Edge Access Panel - Slat Station 188.14
621QB	Lower Leading Edge Access Panel - Slat Station 307.75

E. Prepare for the Removal

SUBTASK 30-11-31-860-001

(1) Extend the Leading Edge Slat.

ECCN 9E991 BOEING PROPRIETARY - See title page for details

SUBTASK 30-11-31-860-002

> **WARNING** MAKE SURE THAT YOU INSTALL THE LEADING EDGE FLAP AND SLAT ACTUATORS LOCKOUT SET TO PREVENT ACCIDENTAL OPERATION. THE LEADING EDGE FLAP AND SLAT CAN MOVE QUICKLY. THIS CAN CAUSE INJURY TO PERSONS AND DAMAGE TO EQUIPMENT.

(2) Do this task: Leading Edge Flap and Slat Locks Installation, TASK 27-81-00-480-801.

SUBTASK 30-11-31-010-014

(3) To get access to the telescoping duct, remove these panels (TASK 57-41-02-000-801):

(a) For the left wing, open these access panels:

Number	Name/Location
521DB	Lower Leading Edge Access Panel - Slat Station 71.38
521KB	Lower Leading Edge Access Panel - Slat Station 188.12
521RB	Lower Leading Edge Access Panel - Slat Station 307.75

(b) For the right wing, open these access panels:

Number	Name/Location
621DB	Lower Leading Edge Access Panel - Slat Station 71.38
621JB	Lower Leading Edge Access Panel - Slat Station 188.14
621QB	Lower Leading Edge Access Panel - Slat Station 307.75

F. Wing Anti-Ice Telescoping Duct Seal Removal

SUBTASK 30-11-31-020-020

> **WARNING** DO NOT LET OBJECTS GET IN THE HOUSING ASSEMBLY OF THE SLAT TRACK. THIS WILL HELP PREVENT A PUNCTURE OF THE HOUSING ASSEMBLY THAT COULD CAUSE A FUEL LEAK. THE FUEL LEAK COULD CAUSE A FIRE AND POSSIBLE DEATH OR INJURY TO PERSONNEL.

(1) Do these steps to remove the supply ducts [6], bearing [10], and bearing [14]:

(a) Remove the bolt [16], bolt [17], bolt [18], and washers [15].

(b) Disconnect the clamp [5] from one side of the supply duct [6].

1) Remove the section from the supply ducts [6].

(c) Remove the bearing [10] and bearing [14].

SUBTASK 30-11-31-020-021

(2) Turn the inner telescoping duct [1] 90 degrees and lower the duct from the wing.

SUBTASK 30-11-31-020-022

(3) Remove the O-ring [11], O-rings [12], or O-ring [13] from the swivel joint of the inner telescoping duct [1].

SUBTASK 30-11-31-020-023

(4) Discard the O-ring [11], O-rings [12], and O-ring [13].

SUBTASK 30-11-31-020-005

(5) Pull the inner telescoping duct [1] from the outer telescoping duct [26].

SUBTASK 30-11-31-020-004

(6) Disassemble the telescoping duct seal.

(a) Remove the lockwire [3].

(b) Loosen the cap nut [4].

ECCN 9E991 BOEING PROPRIETARY - See title page for details

(c) Remove the cap nut [4], back up rings [2], ring [7], seal [8], and retainer [9].

END OF TASK

ECCN 9E991 BOEING PROPRIETARY - See title page for details

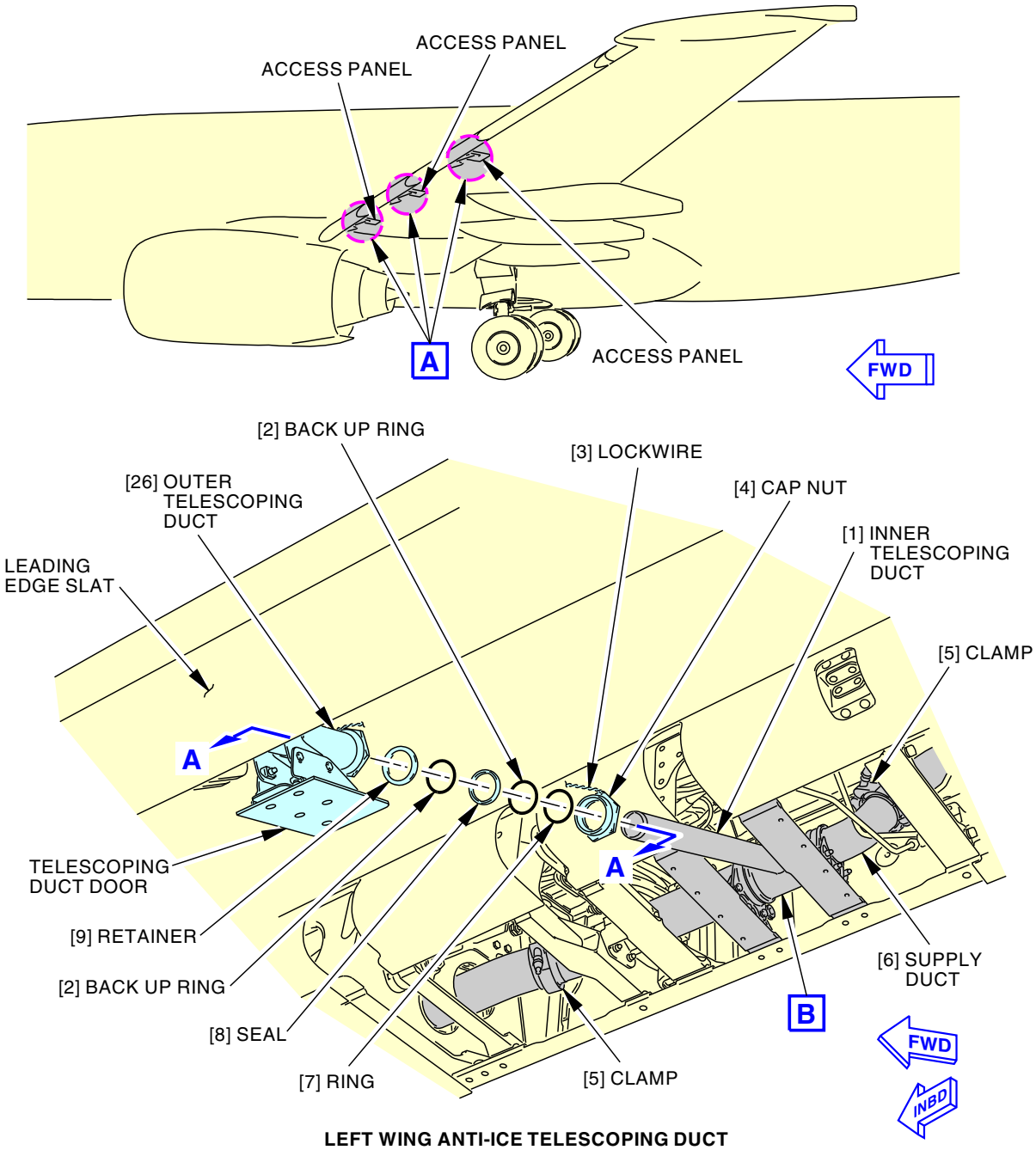

LEFT WING ANTI-ICE TELESCOPING DUCT
(RIGHT WING ANTI-ICE TELESCOPING DUCT IS OPPOSITE)
(EXAMPLE)

A

F42429 S0006573075_V6

Wing Anti-Icing Telescoping Duct Installation
Figure 401/30-11-31-990-801 (Sheet 1 of 3)

ECCN 9E991 BOEING PROPRIETARY - See title page for details

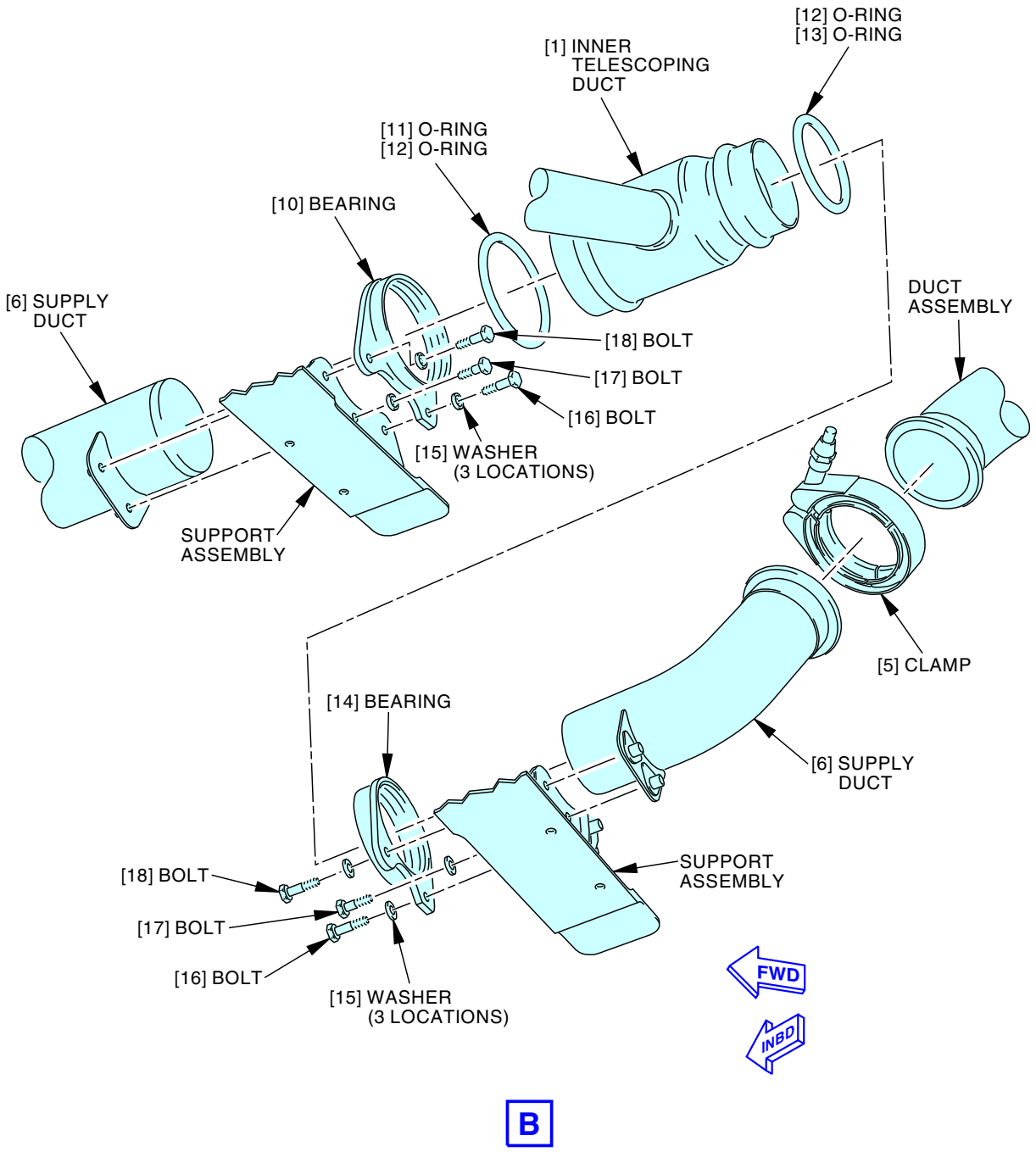

F94016 S0006573076_V4

Wing Anti-Icing Telescoping Duct Installation
Figure 401/30-11-31-990-801 (Sheet 2 of 3)

ECCN 9E991 BOEING PROPRIETARY - See title page for details

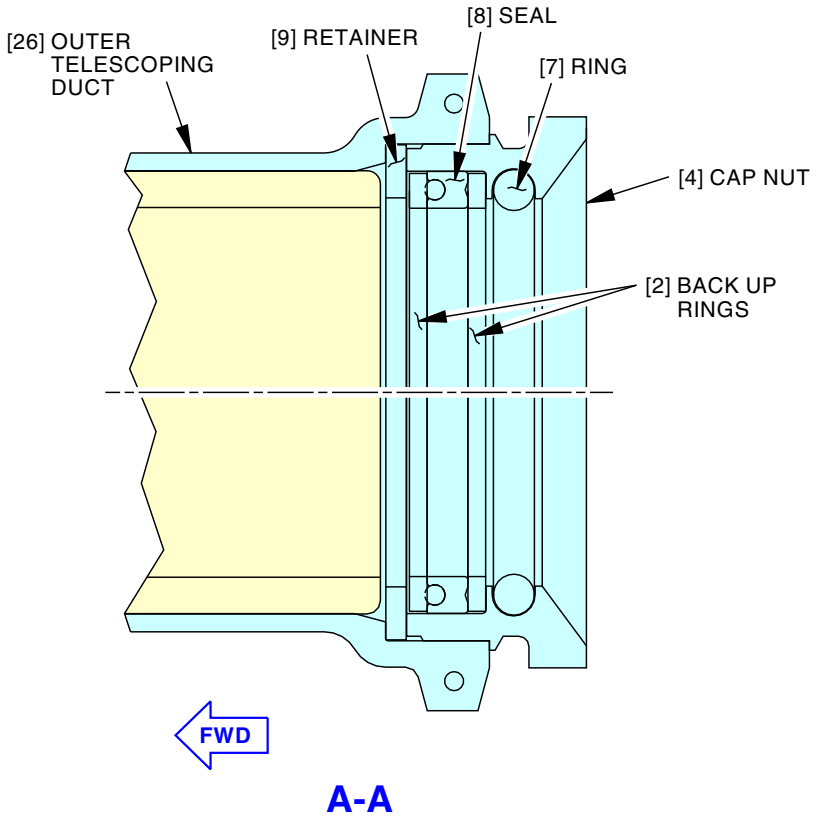

3056305 S0000820237_V1

Wing Anti-Icing Telescoping Duct Installation
Figure 401/30-11-31-990-801 (Sheet 3 of 3)

ECCN 9E991 BOEING PROPRIETARY - See title page for details

TASK 30-11-31-400-801

3. Wing Anti-Ice Telescoping Duct Seal Installation

(Figure 401)

A. General

(1) This task gives instructions to install the Wing Anti-Ice Telescoping Duct Seal.

B. References

Reference	Title
20-10-44-400-801	Lockwire, Cotter Pins, and Lockrings - Installation (P/B 401)
20-50-11-910-801	Standard Torque Values (P/B 201)
27-81-00-080-801	Leading Edge Flap and Slat Locks Removal (P/B 201)
27-81-00-480-801	Leading Edge Flap and Slat Locks Installation (P/B 201)
30-11-00-790-801	Wing Anti-Icing Duct - Leak Test (P/B 501)
57-41-02-400-801	Leading Edge Access Panel Installation (P/B 201)
SWPM 20-20-00	ELECTRICAL BONDING PROCESSES

C. Tools/Equipment

NOTE: When more than one tool part number is listed under the same "Reference" number, the tools shown are alternates to each other within the same airplane series. Tool part numbers that are replaced or non-procurable are preceded by "Opt:", which stands for Optional.

Reference	Description
COM-1550	Bonding Meter - Approved, Intrinsically Safe (Approved for use in Class I, Divisions I & II hazardous (classified) locations. Outside these hazardous locations, COM-614 can be used in lieu of COM-1550). Part #: 620LK Supplier: 1CRL2 Part #: M1 Supplier: 3AD17 Part #: M1B Supplier: 3AD17 Part #: T477W (C15292) Supplier: 06659

D. Consumable Materials

Reference	Description	Specification
A50231	Sealant - Pressure And Environmental - Chromate Type	BMS5-95 Class B
B00130	Alcohol - Isopropyl	TT-I-735
D00013	Grease - Aircraft And Instrument Grease	MIL-PRF-23827 (NATO G-354) (Supersedes MIL-G-23827)
D00254	Compound - Silicone	SAE AS8660 (NATO S-736) (Supersedes MIL-S-8660)
G00034	Cotton Wiper - Process Cleaning Absorbent Wiper (Cheesecloth, Gauze)	AMS3819 Class 1 Grade A or B Form 1 (Supersede BMS15-5 CL A)

E. Expendables/Parts

AMM Item	Description	AIPC Reference	AIPC Effectivity
2	Back up ring	30-11-31-01-045	LOM ALL

ECCN 9E991 BOEING PROPRIETARY - See title page for details

(Continued)

AMM Item	Description	AIPC Reference	AIPC Effectivity
6	Supply duct	30-11-31-02A-050	LOM ALL
		30-11-31-02A-055	LOM ALL
		30-11-31-02A-060	LOM ALL
		30-11-31-02A-065	LOM ALL
		30-11-31-02A-070	LOM ALL
		30-11-31-02A-075	LOM ALL
		30-11-31-02A-080	LOM ALL
		30-11-31-02A-085	LOM ALL
		30-11-31-02A-095	LOM ALL
		30-11-31-03A-045	LOM ALL
		30-11-31-03A-050	LOM ALL
		30-11-31-03A-055	LOM ALL
		30-11-31-03A-060	LOM ALL
		30-11-31-03A-065	LOM ALL
		30-11-31-03A-072	LOM ALL
		30-11-31-03A-073	LOM ALL
		30-11-31-03A-075	LOM ALL
		30-11-31-03A-135	LOM ALL
		30-11-31-03A-140	LOM ALL
		30-11-31-03A-145	LOM ALL
		30-11-31-03A-150	LOM 402, 404, 406, 407, 411, 412, 415, 416, 420, 422-434, 437-447, 450-453
		30-11-31-03A-157	LOM ALL
		30-11-31-03A-158	LOM ALL
		30-11-31-03A-160	LOM ALL
		30-11-31-03A-165	LOM ALL
		30-11-31-03A-170	LOM ALL
		30-11-31-04A-050	LOM ALL
		30-11-31-04A-055	LOM ALL
		30-11-31-04A-060	LOM ALL
		30-11-31-04A-070	LOM ALL
		30-11-31-04A-075	LOM ALL
		30-11-31-04A-080	LOM ALL
		30-11-31-04A-085	LOM ALL
		30-11-31-04A-100	LOM ALL
		30-11-31-04A-105	LOM ALL
7	Ring	30-11-31-01-040	LOM ALL
8	Seal	30-11-31-01-010	LOM ALL

ECCN 9E991 BOEING PROPRIETARY - See title page for details

(Continued)

AMM Item	Description	AIPC Reference	AIPC Effectivity
9	Retainer	30-11-31-01-020	LOM ALL
11	O-ring	30-11-31-02A-090	LOM ALL
		30-11-52-10-035	LOM ALL
12	O-ring	30-11-31-02A-090	LOM ALL
		30-11-52-10-030	LOM ALL
		30-11-52-10-035	LOM ALL
13	O-ring	30-11-31-02A-090	LOM ALL
		30-11-52-10-030	LOM ALL

F. Location Zones

Zone	Area
520	Subzone - Left Wing: Leading Edge, Fwd of Front Spar, Outboard of Strut and Nacelle Gap Cover Area
620	Subzone - Right Wing: Leading Edge, Forward of Front Spar, Outboard of Nacelle Strut

G. Access Panels

Number	Name/Location
521DB	Lower Leading Edge Access Panel - Slat Station 71.38
521KB	Lower Leading Edge Access Panel - Slat Station 188.12
521RB	Lower Leading Edge Access Panel - Slat Station 307.75
621DB	Lower Leading Edge Access Panel - Slat Station 71.38
621JB	Lower Leading Edge Access Panel - Slat Station 188.14
621QB	Lower Leading Edge Access Panel - Slat Station 307.75

H. Wing Anti-Ice Telescoping Duct Seal Installation

SUBTASK 30-11-31-860-003

> **WARNING** MAKE SURE THAT PERSONS AND EQUIPMENT ARE CLEAR OF THE LEADING EDGE SLATS. THE LEADING EDGE SLATS CAN MOVE QUICKLY. THIS CAN CAUSE INJURY TO PERSONS AND DAMAGE TO EQUIPMENT.

(1) If the actuator locks are not installed, do this task: Leading Edge Flap and Slat Locks Installation, TASK 27-81-00-480-801.

SUBTASK 30-11-31-420-001

(2) Assemble the telescoping duct seal.

(a) Put grease, D00013, on the inside diameter of the outer duct assembly.

(b) Install the retainer [9], back up rings [2], seal [8], ring [7], and cap nut [4] on the inner telescoping duct [1] (Figure 401).

1) It is necessary to install seal [8] with the larger cutout facing to the outer telescoping duct [26] and the small dimple facing to cap nut [4] (View A-A, Figure 401).

(c) Tighten the cap nut [4] to 250.0 in-lb (28.2 N·m) - 370.0 in-lb (41.8 N·m).

(d) Install the lockwire [3] on the cap nut [4] (TASK 20-10-44-400-801).

ECCN 9E991 BOEING PROPRIETARY - See title page for details

SUBTASK 30-11-31-420-012

(3) Install the new O-ring [11], new O-ring [12], or new O-ring [13], as necessary, on the swivel joint of the inner telescoping duct [1].

(a) If it is necessary use silicone compound, D00254, on the O-rings to make installation easier.

SUBTASK 30-11-31-420-013

(4) To install the inner telescoping duct [1], do these steps:

(a) Put the bearing [10] and bearing [14] on the ends of the inner telescoping duct [1].

(b) Put the inner telescoping duct [1] into position.

(c) Install the bolts [16] and washers [15].

1) Do not tighten the bolts [16] until after the supply duct [6] is installed.

SUBTASK 30-11-31-420-014

(5) To install the supply duct [6], do these steps:

(a) Clean the mating surfaces of the supply duct [6] tab and support assembly (SWPM 20-20-00).

1) Use cotton wiper, G00034, made moist with alcohol, B00130.

2) Immediately dry the surfaces with a new cotton wiper, G00034.

(b) Apply a bead of sealant, A50231, along the top edge of the support assembly and bearings.

(c) Put the supply duct [6] into position.

(d) Install the bolts [17], bolts [18], and washers [15].

(e) Tighten the bolts [16], bolts [17], and bolts [18].

(f) Measure the electrical bonding resistance between the supply duct [6] tab and support assembly (SWPM 20-20-00).

1) Use an intrinsically safe approved bonding meter, COM-1550.

2) Make sure that the bonding resistance is 0.00070 ohms (0.70 milliohms) or less.

(g) Fillet seal the supply duct [6] tab with sealant, A50231.

(h) Position the clamps [5] so that there is a clearance of at least 0.2 in. (5.1 mm) from any adjacent structure.

1) Tighten the clamps [5] (TASK 20-50-11-910-801).

I. Wing Anti-Ice Telescoping Duct Seal Installation Test

SUBTASK 30-11-31-710-001

(1) Do this task: Wing Anti-Icing Duct - Leak Test, TASK 30-11-00-790-801.

J. Put the Airplane Back to Its Usual Condition

SUBTASK 30-11-31-410-012

(1) Install these panels, do this task: Leading Edge Access Panel Installation, TASK 57-41-02-400-801.

(a) For the left wing, close these access panels:

Number	Name/Location
521DB	Lower Leading Edge Access Panel - Slat Station 71.38
521KB	Lower Leading Edge Access Panel - Slat Station 188.12
521RB	Lower Leading Edge Access Panel - Slat Station 307.75

ECCN 9E991 BOEING PROPRIETARY - See title page for details

(b) For the right wing, close these access panels:

Number	Name/Location
621DB	Lower Leading Edge Access Panel - Slat Station 71.38
621JB	Lower Leading Edge Access Panel - Slat Station 188.14
621QB	Lower Leading Edge Access Panel - Slat Station 307.75

SUBTASK 30-11-31-440-001

(2) Do this task: Leading Edge Flap and Slat Locks Removal, TASK 27-81-00-080-801.

END OF TASK

TASK 30-11-31-000-802

4. Wing Anti-Ice Telescoping Duct Removal

(Figure 402)

A. General

(1) This task gives instructions to remove the Wing Anti-Ice Telescoping Duct.

B. References

Reference	Title
27-81-00 P/B 201	LEADING EDGE FLAP AND SLAT CONTROL SYSTEM - MAINTENANCE PRACTICES
27-81-00-480-801	Leading Edge Flap and Slat Locks Installation (P/B 201)
57-41-02-000-801	Leading Edge Access Panel Removal (P/B 201)

C. Location Zones

Zone	Area
520	Subzone - Left Wing: Leading Edge, Fwd of Front Spar, Outboard of Strut and Nacelle Gap Cover Area
620	Subzone - Right Wing: Leading Edge, Forward of Front Spar, Outboard of Nacelle Strut

D. Access Panels

Number	Name/Location
521DB	Lower Leading Edge Access Panel - Slat Station 71.38
521KB	Lower Leading Edge Access Panel - Slat Station 188.12
521RB	Lower Leading Edge Access Panel - Slat Station 307.75
522CB	Slat No. 4 - Cove Skin
523CB	Slat No. 3 - Cove Skin
524CB	Slat No. 2 - Cove Skin
621DB	Lower Leading Edge Access Panel - Slat Station 71.38
621JB	Lower Leading Edge Access Panel - Slat Station 188.14
621QB	Lower Leading Edge Access Panel - Slat Station 307.75
622CB	Slat No. 5 - Cove Skin
623CB	Slat No. 6 - Cove Skin
624CB	Slat No. 7 - Cove Skin

ECCN 9E991 BOEING PROPRIETARY - See title page for details

E. Prepare for the Removal

SUBTASK 30-11-31-860-004

> **WARNING** MAKE SURE THAT PERSONNEL AND EQUIPMENT STAY AWAY FROM THE LEADING EDGE SLATS, TRAILING EDGE FLAPS, AND DRIVE MECHANISMS. THE FLAPS, SLATS, AND DRIVE MECHANISMS MOVE QUICKLY. THIS CAN CAUSE INJURIES TO PERSONNEL AND DAMAGE TO EQUIPMENT.

(1) Extend the leading edge slats (TASK 27-81-00-480-801).

SUBTASK 30-11-31-010-013

(2) To get access to the telescoping duct, remove these panels (TASK 57-41-02-000-801).

(a) For the left wing, open these access panels:

Number	Name/Location
521DB	Lower Leading Edge Access Panel - Slat Station 71.38
521KB	Lower Leading Edge Access Panel - Slat Station 188.12
521RB	Lower Leading Edge Access Panel - Slat Station 307.75

(b) For the right wing, open these access panels:

Number	Name/Location
621DB	Lower Leading Edge Access Panel - Slat Station 71.38
621JB	Lower Leading Edge Access Panel - Slat Station 188.14
621QB	Lower Leading Edge Access Panel - Slat Station 307.75

SUBTASK 30-11-31-020-012

(3) Remove the four bolts [38] that hold the bracket [39] to the outer telescoping duct [26].

NOTE: The following procedure is applicable to slats 2 through 7, unless otherwise stated.

SUBTASK 30-11-31-200-001

> **WARNING** DO NOT LET OBJECTS GET IN THE HOUSING ASSEMBLY OF THE SLAT TRACK. THIS WILL HELP PREVENT A PUNCTURE OF THE HOUSING ASSEMBLY THAT COULD CAUSE A FUEL LEAK. THE FUEL LEAK COULD CAUSE A FIRE AND POSSIBLE DEATH OR INJURY TO PERSONNEL.

(4) Keep clean and free of all unwanted objects (FOD), the housing (can) assemblies of the slat main tracks, at all time.

F. Outer Telescoping Duct Removal

SUBTASK 30-11-31-010-003

(1) Do these steps to remove the inner skin panel from the outer slat.

(a) Remove the backup plates [28].

NOTE: The backup plates hold the assembly seal.

(b) Remove the seal [20].

(c) Remove the applicable cover panel [21]:

1) Open these access panels:

Number	Name/Location
522CB	Slat No. 4 - Cove Skin
523CB	Slat No. 3 - Cove Skin
524CB	Slat No. 2 - Cove Skin
622CB	Slat No. 5 - Cove Skin

ECCN 9E991 BOEING PROPRIETARY - See title page for details

(Continued)

Number	Name/Location
623CB	Slat No. 6 - Cove Skin
624CB	Slat No. 7 - Cove Skin

SUBTASK 30-11-31-010-008

(2) Do this step to remove the access door from the outer slat.

(a) Remove the cover plate [22]

SUBTASK 30-11-31-020-010

(3) Do these steps to remove the blade seal [24]:

(a) Remove the retaining bolts [32].

(b) Remove the washers [33], sleeves [34], springs [35], spacers [36], and spring retainers [37] (2 locations).

(c) Remove the washer [33], washers [44], sleeve [34], spring [35], spacer [36], and spring retainer [37].

SUBTASK 30-11-31-030-002

(4) Remove the retaining bolts [25] and washers [43] from the spray duct [27] on both ends of the slat.

SUBTASK 30-11-31-030-003

(5) Move the spray duct [27] out from the rib ends [31] until the outer telescoping duct [26], with the spray duct bearings [19], can be removed.

(a) Remove the outer telescoping duct [26].

NOTE: If there is not sufficient clearance between angle details of the leading edge to remove the duct, do a modification of the leading edge angles (LEADING EDGE FLAP AND SLAT CONTROL SYSTEM - MAINTENANCE PRACTICES, PAGEBLOCK 27-81-00/201).

SUBTASK 30-11-31-030-005

(6) Remove the spray duct bearings [19].

G. Inner Telescoping Duct Removal

SUBTASK 30-11-31-020-016

WARNING DO NOT LET OBJECTS GET IN THE HOUSING ASSEMBLY OF THE SLAT TRACK. THIS WILL HELP PREVENT A PUNCTURE OF THE HOUSING ASSEMBLY THAT COULD CAUSE A FUEL LEAK. THE FUEL LEAK COULD CAUSE A FIRE AND POSSIBLE DEATH OR INJURY TO PERSONNEL.

(1) Do these steps to remove the supply ducts [6], bearing [10], and bearing [14]:

(a) Remove the bolt [16], bolt [17], bolt [18], and washers [15].

(b) Disconnect the clamp [5] from one side of the supply duct [6].

1) Remove the section from the supply ducts [6].

(c) Remove the bearing [10] and bearing [14].

SUBTASK 30-11-31-020-017

(2) Turn the inner telescoping duct [1] 90 degrees and lower the duct from the wing.

ECCN 9E991 BOEING PROPRIETARY - See title page for details

SUBTASK 30-11-31-020-018

(3) Remove the O-ring [11], O-rings [12], and O-ring [13] from the swivel joint of the inner telescoping duct [1].

SUBTASK 30-11-31-020-019

(4) Discard the O-ring [11], O-rings [12] and O-ring [13].

END OF TASK

ECCN 9E991 BOEING PROPRIETARY - See title page for details

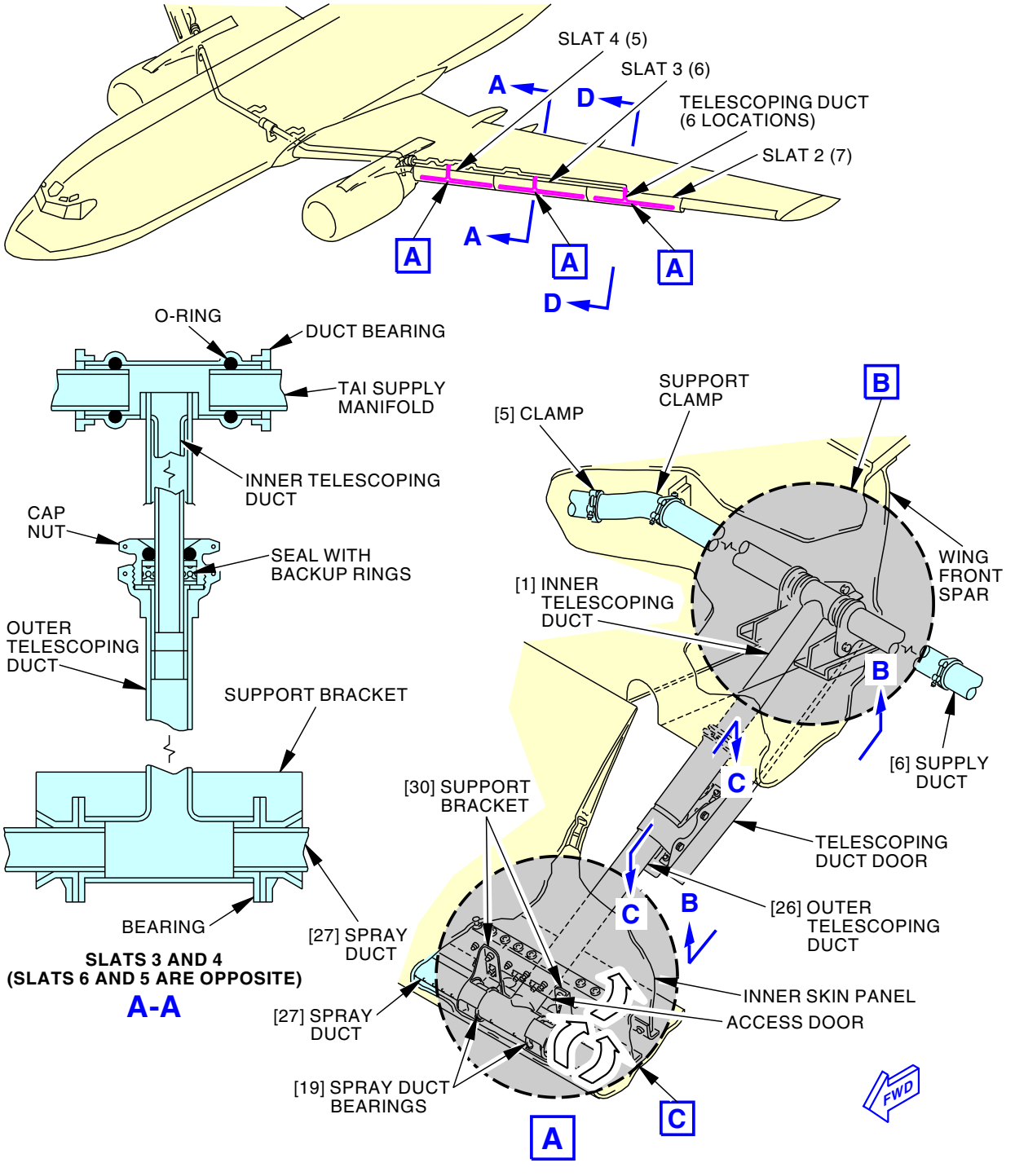

1335838 S0000236138_V4

Wing Anti-Icing Telescoping Duct Installation
Figure 402/30-11-31-990-802 (Sheet 1 of 6)

ECCN 9E991 BOEING PROPRIETARY - See title page for details

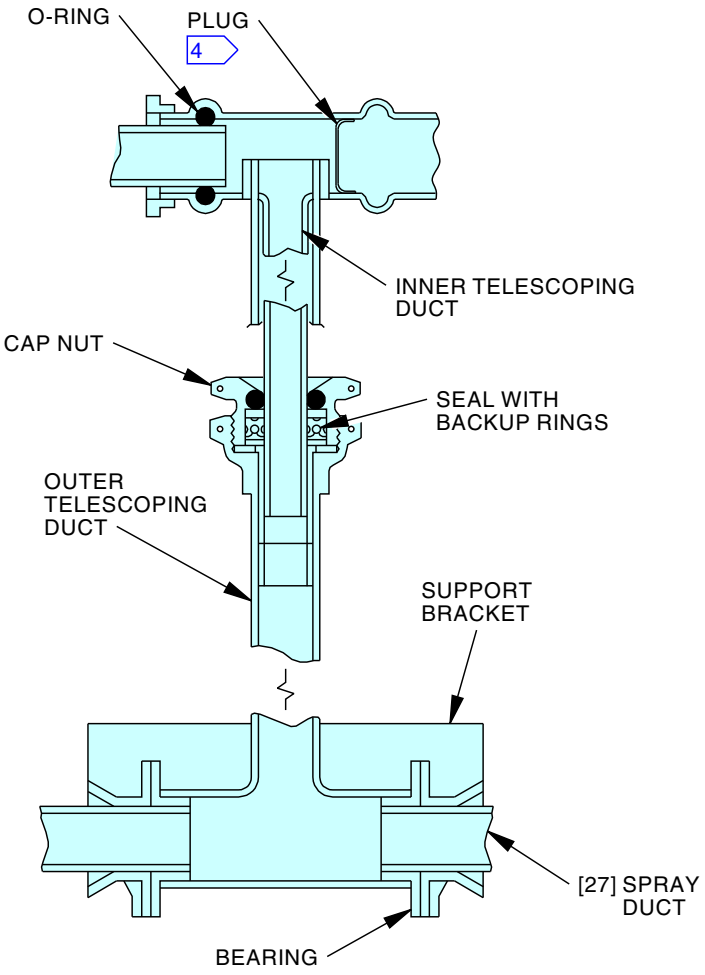

SLAT 2
(SLAT 7 IS OPPOSITE)

D-D

4 THE OUTER END IS PLUGGED

2993999 S0000770763_V1

Wing Anti-Icing Telescoping Duct Installation
Figure 402/30-11-31-990-802 (Sheet 2 of 6)

ECCN 9E991 BOEING PROPRIETARY - See title page for details

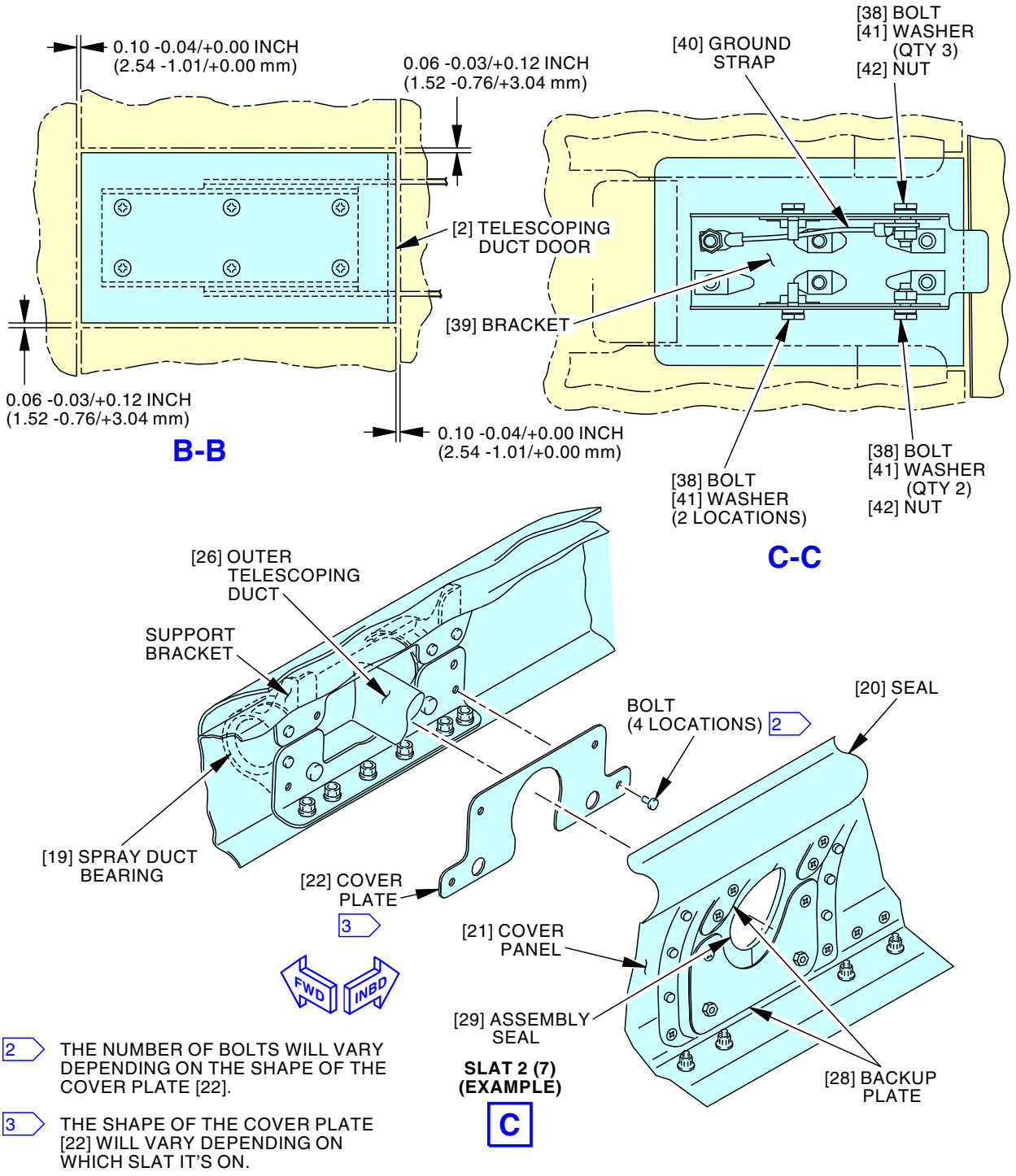

Wing Anti-Icing Telescoping Duct Installation
Figure 402/30-11-31-990-802 (Sheet 3 of 6)

ECCN 9E991 BOEING PROPRIETARY - See title page for details

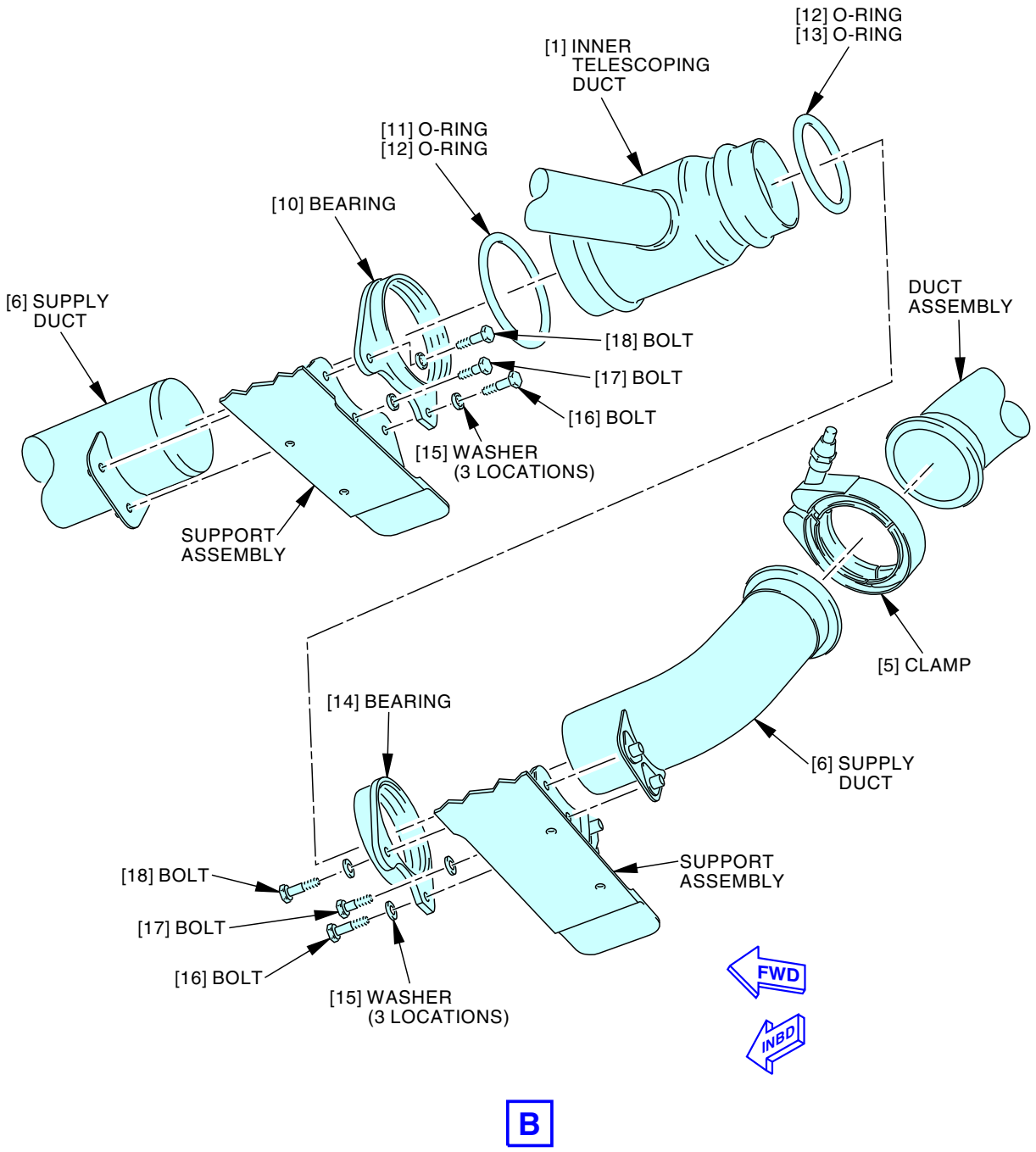

F94016 S0006573076_V4

Wing Anti-Icing Telescoping Duct Installation
Figure 402/30-11-31-990-802 (Sheet 4 of 6)

ECCN 9E991 BOEING PROPRIETARY - See title page for details

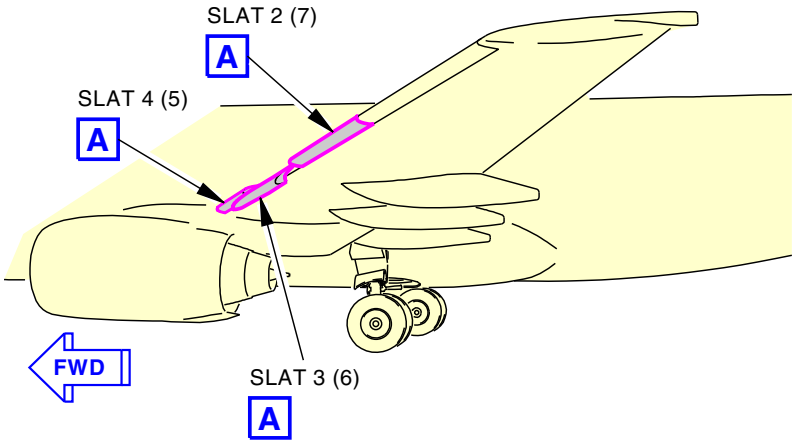

LEFT WING
(RIGHT WING IS OPPOSITE)

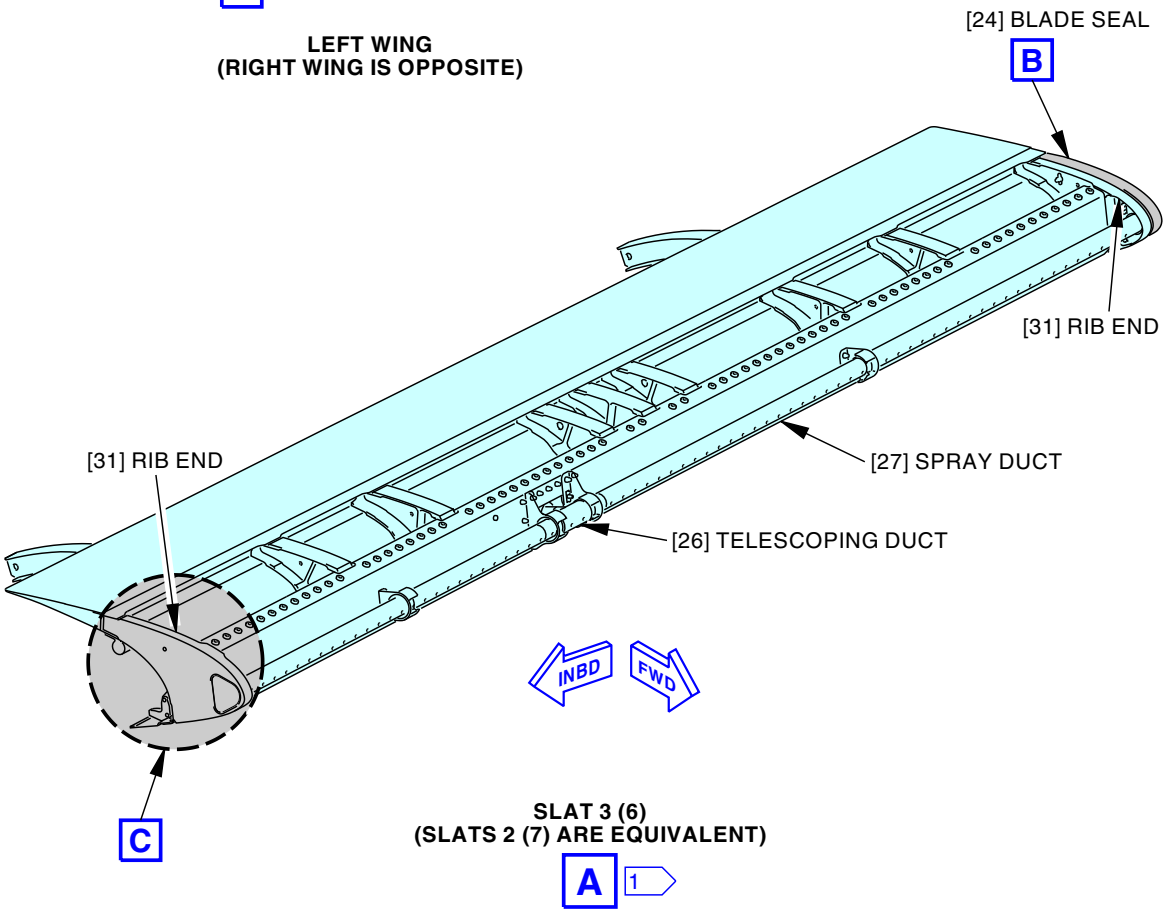

SLAT 3 (6)
(SLATS 2 (7) ARE EQUIVALENT)

1 SLAT 4 (5) HAVE THE BLADE SEAL [24] ON BOTH ENDS OF THE SLAT.

2296254 S0000520540_V2

Wing Anti-Icing Telescoping Duct Installation
Figure 402/30-11-31-990-802 (Sheet 5 of 6)

ECCN 9E991 BOEING PROPRIETARY - See title page for details

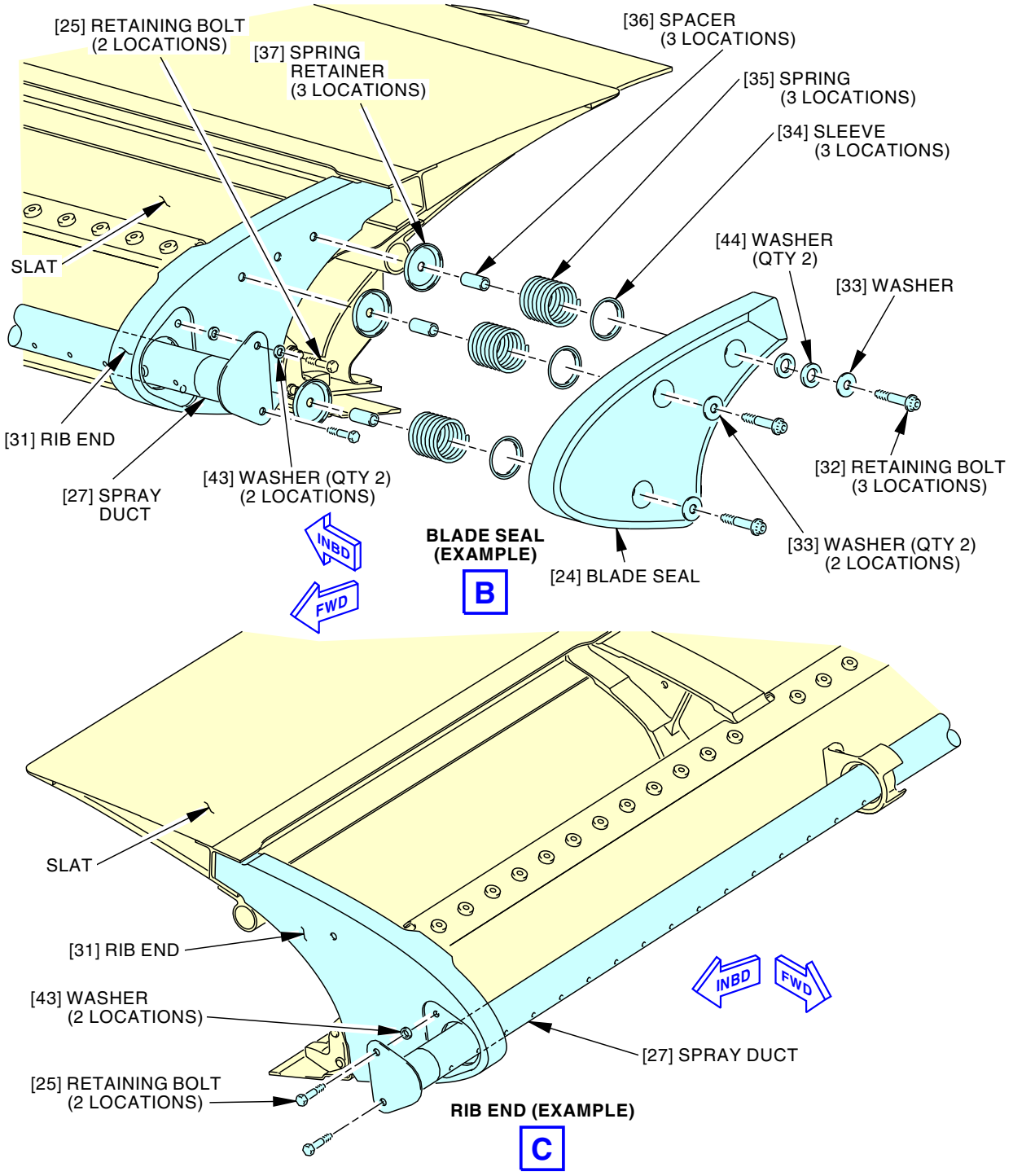

2296257 S0000520679_V3

Wing Anti-Icing Telescoping Duct Installation
Figure 402/30-11-31-990-802 (Sheet 6 of 6)

ECCN 9E991 BOEING PROPRIETARY - See title page for details

TASK 30-11-31-400-802

5. Wing Anti-Ice Telescoping Duct Installation

(Figure 402)

A. General

(1) This task gives instructions to install the Wing Anti-Ice Telescoping Duct.

B. References

Reference	Title
20-50-11-910-801	Standard Torque Values (P/B 201)
27-81-00-080-801	Leading Edge Flap and Slat Locks Removal (P/B 201)
30-11-00-790-801	Wing Anti-Icing Duct - Leak Test (P/B 501)
57-41-02-400-801	Leading Edge Access Panel Installation (P/B 201)
SWPM 20-20-00	ELECTRICAL BONDING PROCESSES

C. Tools/Equipment

NOTE: When more than one tool part number is listed under the same "Reference" number, the tools shown are alternates to each other within the same airplane series. Tool part numbers that are replaced or non-procurable are preceded by "Opt:", which stands for Optional.

Reference	Description
COM-1550	Bonding Meter - Approved, Intrinsically Safe (Approved for use in Class I, Divisions I & II hazardous (classified) locations. Outside these hazardous locations, COM-614 can be used in lieu of COM-1550). Part #: 620LK Supplier: 1CRL2 Part #: M1 Supplier: 3AD17 Part #: M1B Supplier: 3AD17 Part #: T477W (C15292) Supplier: 06659

D. Consumable Materials

Reference	Description	Specification
A00160	Sealant - Firewall - Hydraulic Fluid Resistant	BMS5-63
A00900	Sealant - Silicone, RTV - Dow Corning 93-006-1RF (Formerly 93-006-1. Use until Stock depleted)	BMS5-175 Type I Class B-1/2
A50231	Sealant - Pressure And Environmental - Chromate Type	BMS5-95 Class B
B00130	Alcohol - Isopropyl	TT-I-735
C00528	Compound - Corrosion Preventive, Petroleum Hot Application (Soft Film)	MIL-C-11796 Class III
D00254	Compound - Silicone	SAE AS8660 (NATO S-736) (Supersedes MIL-S-8660)
G00034	Cotton Wiper - Process Cleaning Absorbent Wiper (Cheesecloth, Gauze)	AMS3819 Class 1 Grade A or B Form 1 (Supersede BMS15-5 CL A)

E. Expendables/Parts

AMM Item	Description	AIPC Reference	AIPC Effectivity
6	Supply duct	30-11-31-02A-050	LOM ALL

ECCN 9E991 BOEING PROPRIETARY - See title page for details

(Continued)

AMM Item	Description	AIPC Reference	AIPC Effectivity
6 (cont.)		30-11-31-02A-055	LOM ALL
		30-11-31-02A-060	LOM ALL
		30-11-31-02A-065	LOM ALL
		30-11-31-02A-070	LOM ALL
		30-11-31-02A-075	LOM ALL
		30-11-31-02A-080	LOM ALL
		30-11-31-02A-085	LOM ALL
		30-11-31-02A-095	LOM ALL
		30-11-31-03A-045	LOM ALL
		30-11-31-03A-050	LOM ALL
		30-11-31-03A-055	LOM ALL
		30-11-31-03A-060	LOM ALL
		30-11-31-03A-065	LOM ALL
		30-11-31-03A-072	LOM ALL
		30-11-31-03A-073	LOM ALL
		30-11-31-03A-075	LOM ALL
		30-11-31-03A-135	LOM ALL
		30-11-31-03A-140	LOM ALL
		30-11-31-03A-145	LOM ALL
		30-11-31-03A-150	LOM 402, 404, 406, 407, 411, 412, 415, 416, 420, 422-434, 437-447, 450-453
		30-11-31-03A-157	LOM ALL
		30-11-31-03A-158	LOM ALL
		30-11-31-03A-160	LOM ALL
		30-11-31-03A-165	LOM ALL
		30-11-31-03A-170	LOM ALL
		30-11-31-04A-050	LOM ALL
		30-11-31-04A-055	LOM ALL
		30-11-31-04A-060	LOM ALL
		30-11-31-04A-070	LOM ALL
		30-11-31-04A-075	LOM ALL
		30-11-31-04A-080	LOM ALL
		30-11-31-04A-085	LOM ALL
		30-11-31-04A-100	LOM ALL
		30-11-31-04A-105	LOM ALL
11	O-ring	30-11-31-02A-090	LOM ALL
		30-11-52-10-035	LOM ALL
12	O-ring	30-11-31-02A-090	LOM ALL

ECCN 9E991 BOEING PROPRIETARY - See title page for details

(Continued)

AMM Item	Description	AIPC Reference	AIPC Effectivity
12 (cont.)		30-11-52-10-030	LOM ALL
		30-11-52-10-035	LOM ALL
13	O-ring	30-11-31-02A-090	LOM ALL
		30-11-52-10-030	LOM ALL

F. Location Zones

Zone	Area
520	Subzone - Left Wing: Leading Edge, Fwd of Front Spar, Outboard of Strut and Nacelle Gap Cover Area
620	Subzone - Right Wing: Leading Edge, Forward of Front Spar, Outboard of Nacelle Strut

G. Access Panels

Number	Name/Location
521DB	Lower Leading Edge Access Panel - Slat Station 71.38
521KB	Lower Leading Edge Access Panel - Slat Station 188.12
521RB	Lower Leading Edge Access Panel - Slat Station 307.75
522CB	Slat No. 4 - Cove Skin
523CB	Slat No. 3 - Cove Skin
524CB	Slat No. 2 - Cove Skin
621DB	Lower Leading Edge Access Panel - Slat Station 71.38
621JB	Lower Leading Edge Access Panel - Slat Station 188.14
621QB	Lower Leading Edge Access Panel - Slat Station 307.75
622CB	Slat No. 5 - Cove Skin
623CB	Slat No. 6 - Cove Skin
624CB	Slat No. 7 - Cove Skin

H. Inner Telescoping Duct Installation

SUBTASK 30-11-31-420-015

(1) Install the O-ring [11], O-rings [12], and O-ring [13], as necessary, on the swivel joint of the inner telescoping duct [1].

(a) If it is necessary, use silicone compound, D00254, on the O-rings to make installation easier.

SUBTASK 30-11-31-420-016

(2) To install the inner telescoping duct [1], do these steps:

(a) Put the bearing [10] and bearing [14] on the ends of the inner telescoping duct [1].

(b) Put the inner telescoping duct [1] into position.

(c) Install the bolts [16] and washers [15].

1) Do not tighten the bolts until after the supply duct is installed.

SUBTASK 30-11-31-420-017

(3) To install the supply duct [6], do these steps:

(a) Clean the mating surfaces of the supply duct [6] tab and support assembly (SWPM 20-20-00).

1) Use a cotton wiper, G00034, made moist with alcohol, B00130.

ECCN 9E991 BOEING PROPRIETARY - See title page for details

2) Immediately dry the surfaces with a new cotton wiper, G00034.

(b) Apply a bead of sealant, A50231, along the top edge of the support assembly and bearings.

(c) Put the supply duct [6] into position.

(d) Install the bolts [17], bolts [18], and washers [15].

(e) Tighten the bolts [16], bolts [17], and bolts [18].

(f) Measure the electrical bonding resistance between the supply duct [6] tab and the support assembly (SWPM 20-20-00).

1) Use an intrinsically safe approved bonding meter, COM-1550.

2) Make sure that the bonding resistance is 0.00070 ohms (0.70 milliohms) or less.

(g) Fillet seal the supply duct [6] tab with sealant, A50231.

(h) Position the clamps [5] so that there is a clearance of at least 0.2 in. (5.1 mm) from any adjacent structure.

1) Tighten the clamps [5] (TASK 20-50-11-910-801).

I. Outer Telescoping Duct Installation

SUBTASK 30-11-31-430-006

(1) Put the spray duct bearings [19] on each end of the outer telescoping duct [26].

SUBTASK 30-11-31-430-007

(2) Put the outer telescoping duct [26] into the support brackets [30].

SUBTASK 30-11-31-430-008

(3) Do this to install spray duct [27].

(a) Clean the mating surfaces of the spray duct [27] flange, washers [43], and rib end [31].

1) Use cotton wiper, G00034, made moist with alcohol, B00130.

2) Immediately dry the surfaces with a new cotton wiper.

(b) Install the retaining bolts [25], washers [43], and spray duct [27].

SUBTASK 30-11-31-430-009

(4) Measure the electrical bonding resistance between the spray duct [27] flange and the rib end [31] (SWPM 20-20-00).

(a) Use an intrinsically safe approved bonding meter, COM-1550.

(b) Make sure that the bonding resistance is 0.00070 ohms (0.70 milliohms) or less.

SUBTASK 30-11-31-420-010

(5) Fillet seal the spray duct [27] flange with Dow Corning 93-006-1 RF sealant, A00900, or sealant, A00160.

SUBTASK 30-11-31-420-006

(6) Do these steps to install the blade seal [24]:

(a) Connect the washer [33], washers [44], sleeve [34], spring [35], spacer [36], and spring retainer [37] to the blade seal [24].

(b) Connect the washers [33], sleeves [34], springs [35], spacers [36], and spring retainers [37] to the blade seal [24] (2 locations).

(c) Install the retaining bolts [32] to attach the blade seal [24].

SUBTASK 30-11-31-410-002

(7) Do this step to install the access door:

ECCN 9E991 BOEING PROPRIETARY - See title page for details

(a) Install the cover plate [22].

SUBTASK 30-11-31-410-009

(8) Do these steps to install the inner skin panel of the outer slat:

(a) Install the applicable cover panel [21]:

1) Open these access panels:

Number	Name/Location
522CB	Slat No. 4 - Cove Skin
523CB	Slat No. 3 - Cove Skin
524CB	Slat No. 2 - Cove Skin
622CB	Slat No. 5 - Cove Skin
623CB	Slat No. 6 - Cove Skin
624CB	Slat No. 7 - Cove Skin

(b) Install the seal [20].

(c) Install the backup plates [28].

1) Apply compound, C00528, to the hex bolt on the lower backup plate [28].

J. Wing Anit-Icing Duct Leak Test

SUBTASK 30-11-31-790-002

(1) Do this task: Wing Anti-Icing Duct - Leak Test, TASK 30-11-00-790-801.

K. Put the Airplane Back to Its Usual Condition

SUBTASK 30-11-31-410-011

(1) Install these panels, do this task: Leading Edge Access Panel Installation, TASK 57-41-02-400-801.

(a) For the left wing, close these access panel:

Number	Name/Location
521DB	Lower Leading Edge Access Panel - Slat Station 71.38
521KB	Lower Leading Edge Access Panel - Slat Station 188.12
521RB	Lower Leading Edge Access Panel - Slat Station 307.75

(b) For the right wing, close these access panel:

Number	Name/Location
621DB	Lower Leading Edge Access Panel - Slat Station 71.38
621JB	Lower Leading Edge Access Panel - Slat Station 188.14
621QB	Lower Leading Edge Access Panel - Slat Station 307.75

SUBTASK 30-11-31-420-005

(2) Clean the mating surfaces of the ground strap [40] and bracket [39].

(a) Use cotton wiper, G00034, made moist with alcohol, B00130.

(b) Immediately dry the surfaces with a new cotton wiper.

SUBTASK 30-11-31-420-011

(3) Install the bolts [38], ground strap [40], washers [41], and nuts [42] that hold the bracket [39] to the outer telescoping duct [26].

(a) Adjust the vertical position of the bracket [39] to make sure that it is flush with the other access panels.

(b) Tighten the bolts [38] after the vertical position of the bracket [39] is set.

ECCN 9E991 BOEING PROPRIETARY - See title page for details

(c) Do a bonding check for the ground strap [40].

1) Measure the electrical bonding resistance between door and duct (SWPM 20-20-00).

a) Use and intrinsically safe approved bonding meter, COM-1550.

b) Make sure that the bonding resistance is 0.010 ohms (10 milliohms) or less.

(d) Apply sealant, A50231, to the terminal that was removed.

SUBTASK 30-11-31-860-008

(4) Retract the slats to the full up position (TASK 27-81-00-080-801).

SUBTASK 30-11-31-410-004

(5) Adjust the telescoping duct door [2], if needed, to get equal clearances on the inboard and outboard sides, and equal clearances and on the forward and aft sides (Figure 402).

END OF TASK

ECCN 9E991 BOEING PROPRIETARY - See title page for details

WING ANTI-ICE TELESCOPING DUCT - INSPECTION/CHECK

TASK 30-11-31-200-801

1. Wing Anti-Ice Telescoping Duct Check

A. General

(1) This procedure has the wear limits for the inner telescoping duct of the anti-ice telescopic ducts. These ducts are installed on the leading edges for slats 2 through 7.

B. References

Reference	Title
27-81-00-080-801	Leading Edge Flap and Slat Locks Removal (P/B 201)
27-81-00-480-801	Leading Edge Flap and Slat Locks Installation (P/B 201)
30-11-31-000-802	Wing Anti-Ice Telescoping Duct Removal (P/B 401)
30-11-31-400-802	Wing Anti-Ice Telescoping Duct Installation (P/B 401)
SOPM 20-30-03	General Cleaning Procedures

C. Location Zones

Zone	Area
520	Subzone - Left Wing: Leading Edge, Fwd of Front Spar, Outboard of Strut and Nacelle Gap Cover Area
620	Subzone - Right Wing: Leading Edge, Forward of Front Spar, Outboard of Nacelle Strut

D. Procedure

SUBTASK 30-11-31-860-009

> **WARNING** MAKE SURE THAT ALL PERSONNEL AND EQUIPMENT ARE AWAY FROM THE SLATS. THE SLATS MOVE QUICKLY. INJURIES TO PERSONNEL AND DAMAGE TO EQUIPMENT CAN OCCUR.

(1) Do this task to extend the leading edge slats and lock them out: Leading Edge Flap and Slat Locks Installation, TASK 27-81-00-480-801.

SUBTASK 30-11-31-211-001

(2) Examine the inner telescoping duct [1] for dents, damage, or wear. If the inner telescoping duct [1] is coated, use the Table 601 for coating wear limits.

LOM ALL; AIRPLANES WITH TEFLON COATED WING THERMAL ANTI-ICE DUCT

Table 601/30-11-31-993-801 TEFLON COATING WEAR LIMIT CHART

	Max allowable wear damage of coating for Area I	Max allowable wear damage of coating for Area II
Coating total missing	SLAT 4 (5), 10.5 in^2 (6774.2 mm^2)	Unlimited
Coating total missing	SLAT 3 (6), 11.0 in^2 (7096.8 mm^2)	Unlimited
Coating total missing	SLAT 2 (7), 12.5 in^2 (8064.5 mm^2)	Unlimited
Max length of radial damage	1.00 in. (25.40 mm)	Unlimited
Max length of longitudinal damage	Unlimited	Unlimited

ECCN 9E991 BOEING PROPRIETARY - See title page for details

(a) If the damage to the coating is more than the wear limits, remove the coating from the inner telescoping duct [1] (SOPM 20-30-03).

LOM ALL

(b) If dents or damage is found on the base metal, replace the duct.

1) Wing Anti-Ice Telescoping Duct Removal, TASK 30-11-31-000-802

2) Wing Anti-Ice Telescoping Duct Installation, TASK 30-11-31-400-802

E. Put the airplane back to its usual condition

SUBTASK 30-11-31-860-010

(1) Do this task to unlock the leading edge slats and retract them: Leading Edge Flap and Slat Locks Removal, TASK 27-81-00-080-801.

——— END OF TASK ———

ECCN 9E991 BOEING PROPRIETARY - See title page for details

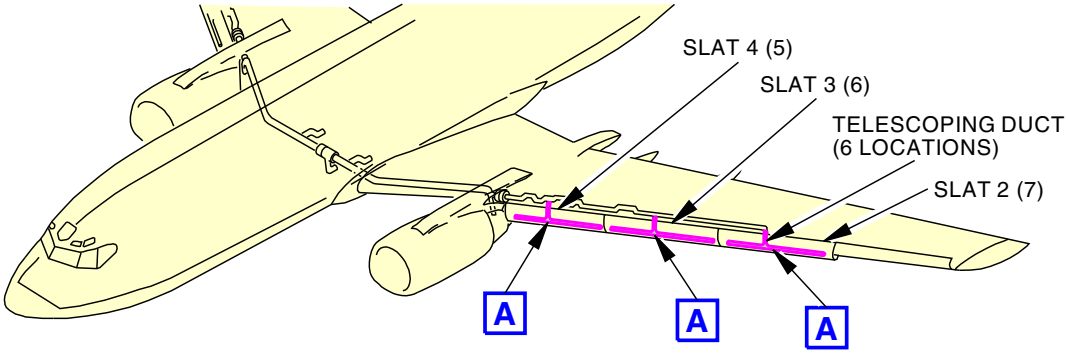

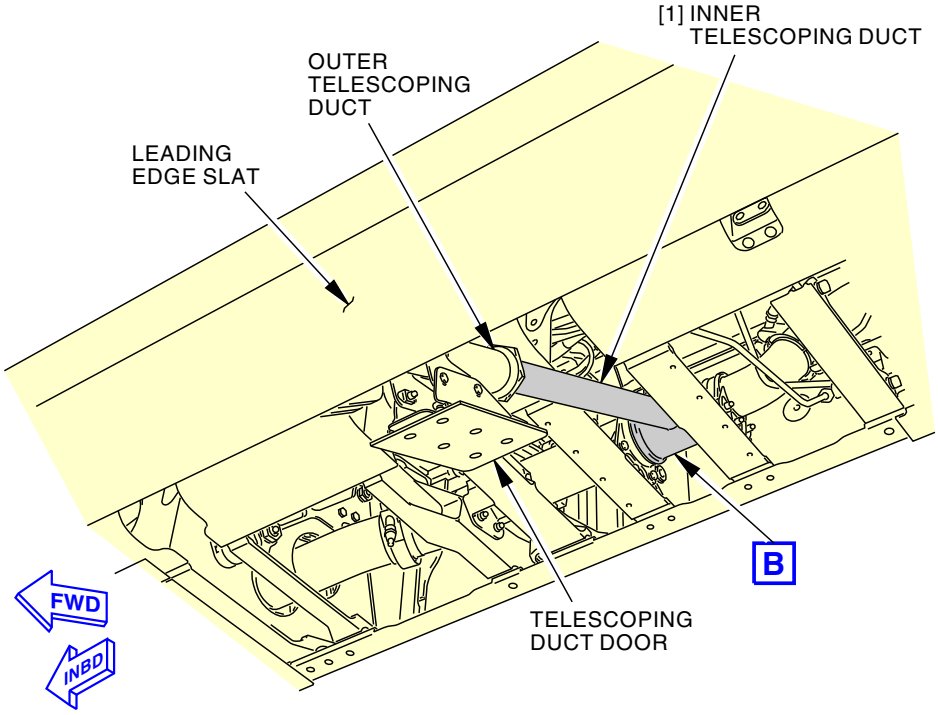

LEFT WING ANTI-ICE TELESCOPING DUCT
(RIGHT WING ANTI-ICE TELESCOPING DUCT IS OPPOSITE) (EXAMPLE)

A

2167198 S0000476998_V3

Wing Anti-Ice Telescoping Duct Inspection
Figure 601/30-11-31-990-804 (Sheet 1 of 2)

ECCN 9E991 BOEING PROPRIETARY - See title page for details

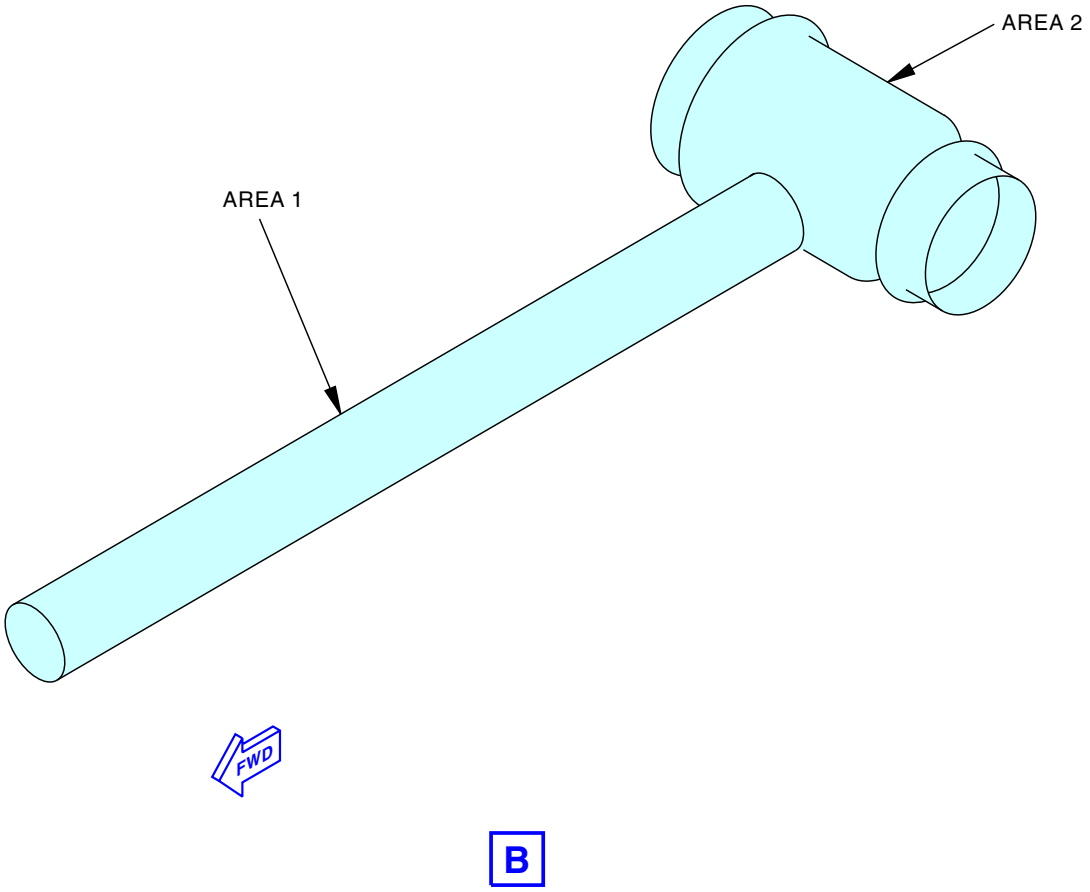

2167200 S0000476999_V2

Wing Anti-Ice Telescoping Duct Inspection
Figure 601/30-11-31-990-804 (Sheet 2 of 2)

ECCN 9E991 BOEING PROPRIETARY - See title page for details

ENGINE AND WING ANTI-ICE PANEL - REMOVAL/INSTALLATION

1. General

A. This procedure has these tasks:

(1) Removal of the engine and wing anti-ice panel.

(2) Installation of the engine and wing anti-ice panel.

TASK 30-11-41-000-801

2. Engine and Wing Anti-Ice Panel Removal

(Figure 401)

A. General

(1) This task gives instructions to remove the Engine and Wing Anti-Ice Panel.

B. Location Zones

Zone	Area
212	Flight Compartment - Right

C. Prepare for the Removal

SUBTASK 30-11-41-860-012

(1) Open these circuit breakers and install safety tags:

CAPT Electrical System Panel, P18-3

Row	Col	Number	Name
A	1	C00146	ANTI-ICE & RAIN WING ANTI-ICE VALVE
A	6	C00148	ANTI-ICE & RAIN ENG 1 & WING CONT
A	7	C01001	ANTI-ICE & RAIN ENG 1 COWL AI VALVE
B	6	C00149	ANTI-ICE & RAIN ENGINE 2 CONTROL
B	7	C01002	ANTI-ICE & RAIN ENG 2 COWL AI VALVE

SUBTASK 30-11-41-010-002

(2) Open the P5 overhead panel.

(a) Loosen the quarter turn fasteners on the bottom corners of the P5 overhead panel.

> **WARNING**
> HOLD THE PANEL TIGHTLY BEFORE YOU RELEASE THE LATCH. THE PANEL IS HEAVY. INJURIES CAN OCCUR IF IT HITS YOU.

(b) Release the panel safety latch.

D. Engine and Wing Anti-Ice Panel Removal

SUBTASK 30-11-41-020-002

> **WARNING**
> THERE ARE HIGH VOLTAGES IN THE P5 OVERHEAD PANEL. MAKE SURE YOU DO NOT TOUCH OR SHORT EXPOSED TERMINALS. INJURY TO PERSONNEL OR DAMAGE TO EQUIPMENT CAN OCCUR.

(1) Remove the connectors from the engine and wing anti-ice panel.

SUBTASK 30-11-41-020-001

(2) Remove the engine and wing anti-ice module [1]:

ECCN 9E991 BOEING PROPRIETARY - See title page for details

(a) Release the fasteners which attach the engine and wing anti-ice module [1] to the P5 overhead panel.

(b) Remove the engine and wing anti-ice module [1].

END OF TASK

ECCN 9E991 BOEING PROPRIETARY - See title page for details

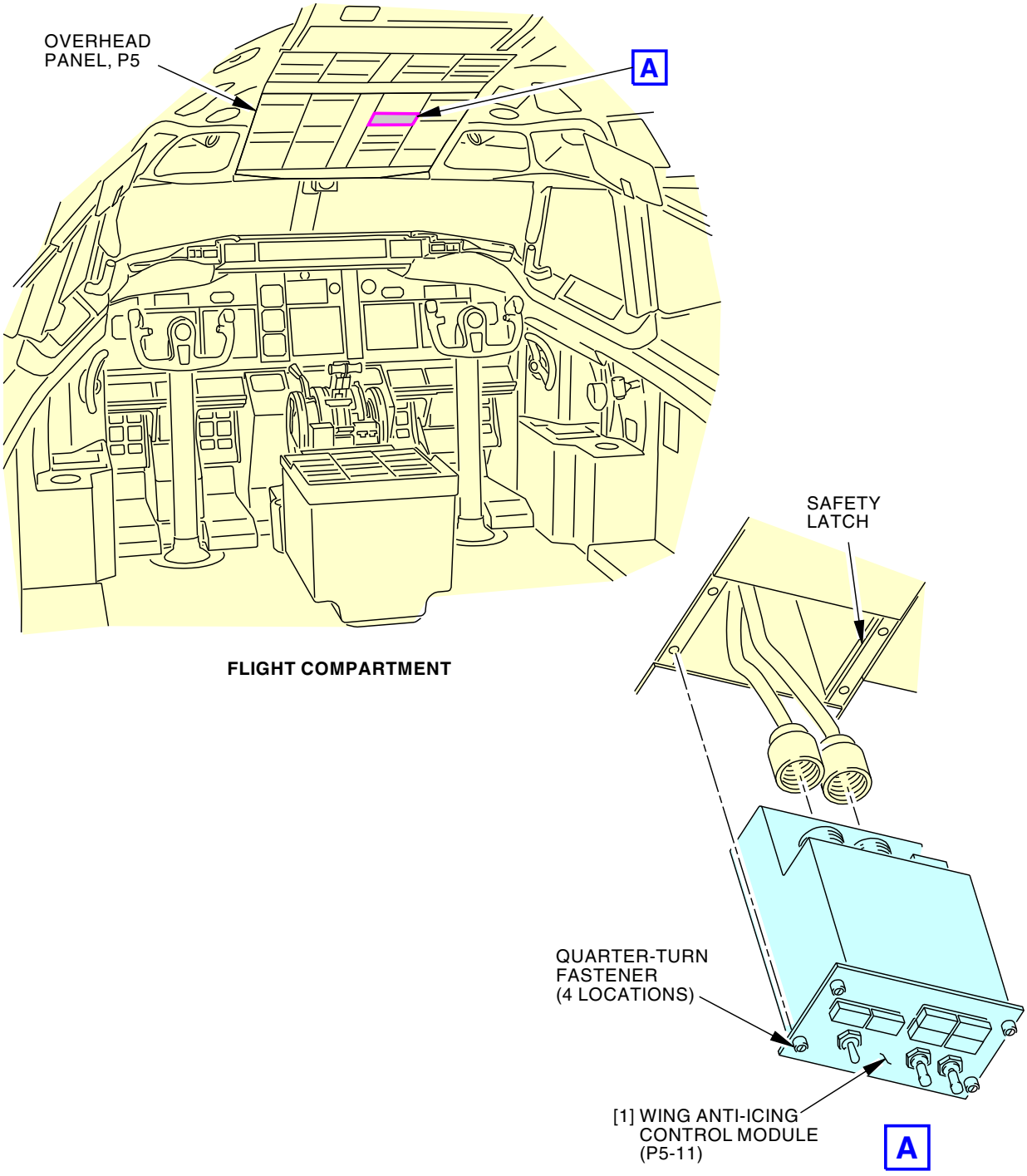

Wing Anti-Icing Control Module Installation
Figure 401/30-11-41-990-802

ECCN 9E991 BOEING PROPRIETARY - See title page for details

TASK 30-11-41-400-801

3. Engine and Wing Anti-Ice Panel Installation

(Figure 401)

A. General

(1) This task gives instructions to install the Engine and Wing Anti-Ice Panel.

B. References

Reference	Title
24-22-00-860-813	Supply External Power (P/B 201)

C. Expendables/Parts

AMM Item	Description	AIPC Reference	AIPC Effectivity
1	Engine and wing anti-ice module	30-11-41-02-005	LOM 402, 404, 406, 407, 411, 412, 415, 416, 420, 422-426
		30-11-41-06-020	LOM 427-434, 437-447, 450-999
		30-11-41-06-025	LOM 427-434, 437-447, 450-999
		30-11-51-06-025	LOM 427-434, 437-447, 450-999

D. Prepare for the Installation

SUBTASK 30-11-41-860-016

(1) Make sure that these circuit breakers are open and have safety tags:

CAPT Electrical System Panel, P18-3

Row	Col	Number	Name
A	1	C00146	ANTI-ICE & RAIN WING ANTI-ICE VALVE
A	6	C00148	ANTI-ICE & RAIN ENG 1 & WING CONT
A	7	C01001	ANTI-ICE & RAIN ENG 1 COWL AI VALVE
B	6	C00149	ANTI-ICE & RAIN ENGINE 2 CONTROL
B	7	C01002	ANTI-ICE & RAIN ENG 2 COWL AI VALVE

SUBTASK 30-11-41-010-004

(2) Open the P5 overhead panel.

(a) Loosen the quarter turn fasteners on the bottom corners of the P5 overhead panel.

> **WARNING**
> HOLD THE PANEL TIGHTLY BEFORE YOU RELEASE THE LATCH. THE PANEL IS HEAVY. INJURIES CAN OCCUR IF IT HITS YOU.

(b) Release the panel safety latch.

E. Engine and Wing Anti-Ice Panel Installation

SUBTASK 30-11-41-420-004

(1) Install the engine and wing anti-ice module [1] in the P5 overhead panel.

SUBTASK 30-11-41-420-005

(2) Tighten the fasteners.

ECCN 9E991 BOEING PROPRIETARY - See title page for details

SUBTASK 30-11-41-420-006

> **WARNING** THERE ARE HIGH VOLTAGES IN THE P5 OVERHEAD PANEL. MAKE SURE THAT YOU DO NOT TOUCH OR SHORT EXPOSED TERMINALS. INJURY TO PERSONNEL OR DAMAGE TO EQUIPMENT CAN OCCUR.

(3) Attach the connectors to the engine and wing anti-ice module [1].

SUBTASK 30-11-41-410-002

> **CAUTION** MAKE SURE THE WIRE ASSEMBLIES ARE FLEXIBLE. DO NOT BEND OR TWIST THEM DURING REMOVAL OR INSTALLATION. THIS CAN CAUSE DAMAGE TO THE WIRE HARNESSES.

(4) Do these steps to close the P5 overhead panel:

(a) Raise the P5 overhead panel.

> **WARNING** HOLD THE PANEL TIGHTLY BEFORE YOU RELEASE THE LATCH. THE PANEL IS HEAVY. INJURIES CAN OCCUR IF IT HITS YOU.

(b) Make sure the safety latch is in the proper position.

(c) Tighten the quarter turn fasteners on the bottom corners of the P5 overhead panel.

SUBTASK 30-11-41-860-013

(5) Make sure that these circuit breakers are closed:

CAPT Electrical System Panel, P18-3

Row	Col	Number	Name
A	1	C00146	ANTI-ICE & RAIN WING ANTI-ICE VALVE
A	6	C00148	ANTI-ICE & RAIN ENG 1 & WING CONT
A	7	C01001	ANTI-ICE & RAIN ENG 1 COWL AI VALVE
B	6	C00149	ANTI-ICE & RAIN ENGINE 2 CONTROL
B	7	C01002	ANTI-ICE & RAIN ENG 2 COWL AI VALVE

F. Engine and Wing Anti-Ice Panel Installation Test

SUBTASK 30-11-41-860-014

(1) Do this task: Supply External Power, TASK 24-22-00-860-813.

SUBTASK 30-11-41-710-001

(2) Put the MASTER DIM AND TEST switch, S3, on the P1-3 main captain panel to the TEST position.

(a) Make sure the COWL VALVE OPEN indicators on the anti-ice panel turn blue.

SUBTASK 30-11-41-710-002

(3) Put the MASTER DIM and TEST switch to the BRT position.

END OF TASK

ECCN 9E991 BOEING PROPRIETARY - See title page for details

ENGINE AND WING ANTI-ICE PANEL - ADJUSTMENT/TEST

1. General

A. This procedure contains a task to do a test of the engine and wing anti-ice panel (P5-11).

TASK 30-11-41-710-801

2. Engine and Wing Thermal Anti-Ice Panel (P5-11) Test

(Figure 501)

A. General

(1) This test makes sure that the Engine and Wing Anti-Ice Panel (P5-11) is operating properly.

B. References

Reference	Title
24-22-00-860-813	Supply External Power (P/B 201)
24-22-00-860-814	Remove External Power (P/B 201)
34-43-00-040-801	Weather Radar (WXR) System - Deactivation (P/B 201)
34-43-00-440-801	Weather Radar (WXR) System - Activation (P/B 201)
36-00-00-860-802	Supply Pressure to the Pneumatic System with an External Ground Air Source (P/B 201)
36-00-00-860-803	Supply Pressure to the Pneumatic System with the APU (P/B 201)
36-00-00-860-806	Remove Pressure from the Pneumatic System (P/B 201)
71-11-02-010-801-F00	Open the Fan Cowl Panels (P/B 201)
71-11-02-410-801-F00	Close the Fan Cowl Panels (P/B 201)
78-31-00-010-801-F00	Open the Thrust Reverser (Selection) (P/B 201)

C. Location Zones

Zone	Area
212	Flight Compartment - Right

D. Prepare for the Tests

SUBTASK 30-11-41-860-001

(1) Do this task: Supply External Power, TASK 24-22-00-860-813.

SUBTASK 30-11-41-860-002

(2) Provide pneumatic pressure for the TAI ducts.

(a) To use the APU to pressurize the TAI duct:

1) Do this task: Supply Pressure to the Pneumatic System with the APU, TASK 36-00-00-860-803.

(b) To use an external air supply to pressurize the TAI duct:

1) Do this task: Supply Pressure to the Pneumatic System with an External Ground Air Source, TASK 36-00-00-860-802.

(c) Put the BLEED 1 and 2 switches on the air conditioning panel in the OFF position.

(d) Put the L PACK AND R PACK switches on the air conditioning panel in the OFF position.

(e) Make sure the ISOLATION VALVE switch is in the OPEN or the AUTO position.

SUBTASK 30-11-41-010-001

(3) For the applicable engine, open the right fan cowl panel. To do this, do this task: Open the Fan Cowl Panels, TASK 71-11-02-010-801-F00.

ECCN 9E991 BOEING PROPRIETARY - See title page for details

SUBTASK 30-11-41-860-003

(4) Make sure that the thrust levers are in the IDLE position.

SUBTASK 30-11-41-040-001

(5) Do this task: Weather Radar (WXR) System - Deactivation, TASK 34-43-00-040-801.

E. Test the WING ANTI-ICE Switch and Indication

SUBTASK 30-11-41-860-004

(1) Press and release the L VALVE OPEN and R VALVE OPEN light switches on the P5-11 panel.

(a) Make sure each light comes on then goes off.

SUBTASK 30-11-41-860-005

(2) Make sure the engine and wing anti-ice panel commands the anti-icing valves open:

(a) Put the WING ANTI-ICE switch in the ON position.

(b) Make sure the VALVE OPEN lights come on brightly for 1 to 6 seconds.

(c) Make sure the VALVE OPEN lights are on dimly after 6 seconds.

SUBTASK 30-11-41-720-001

(3) Check the thrust switch inputs to the engine and wing anti-ice panel:

(a) Put the thrust levers in the full throttle position.

1) Make sure the L and R VALVE OPEN lights come on brightly.

(b) Put the thrust levers in the IDLE position.

(c) Make sure the VALVE OPEN lights are on dimly after 6 seconds.

SUBTASK 30-11-41-860-006

(4) Make sure the engine and wing anti-ice panel commands the anti-icing valves closed:

(a) Put the WING ANTI-ICE switch in the OFF position.

(b) Make sure the VALVE OPEN lights come on brightly for 1 to 6 seconds.

(c) Make sure the VALVE OPEN lights go off after 6 seconds.

F. Test the ENG ANTI-ICE Switches and Indication

SUBTASK 30-11-41-860-007

(1) Press and release the COWL ANTI-ICE and COWL VALVE OPEN light switches on the P5-11 panel.

(a) Make sure each light comes on then goes off.

SUBTASK 30-11-41-860-015

(2) Manually open the PRSOV valve on each engine:

WARNING

DO THESE SPECIFIED TASKS IN THE CORRECT SEQUENCE BEFORE YOU OPEN THE THRUST REVERSERS: RETRACT THE LEADING EDGE, DO THE DEACTIVATION PROCEDURES FOR THE LEADING EDGE AND THE THRUST REVERSER (FOR GROUND MAINTENANCE), AND OPEN THE FAN COWL PANELS. IF YOU DO NOT OBEY THE ABOVE SEQUENCE, INJURIES TO PERSONS AND DAMAGE TO EQUIPMENT CAN OCCUR.

(a) Open the left thrust reverser. To do this, do this task: Open the Thrust Reverser (Selection), TASK 78-31-00-010-801-F00.

(b) Put the applicable engine BLEED switch on the P5-10, forward overhead panel to the ON position.

ECCN 9E991 BOEING PROPRIETARY - See title page for details

(c) Use a wrench on the manual override nut for the PRSOV to put it to the open position.

(d) Make sure that the PRSOV stays in the open position.

NOTE: The PRSOV is spring-loaded to the closed position. If there is pressure supplied and the PRSOV does not stay open, there may be a leakage in the PRSOV or in the sense line(s).

SUBTASK 30-11-41-860-008

(3) Make sure the engine and wing anti-ice panel commands the cowl anti-icing valves open:

(a) Put the ENG ANTI-ICE 1 switch in the ON position.

1) Make sure the left COWL VALVE OPEN light comes on brightly for 1 to 6 seconds.

2) Make sure the COWL VALVE OPEN light goes dimly after 6 seconds.

(b) Put the ENG ANTI-ICE 2 switch in the ON position.

1) Make sure the right COWL VALVE OPEN light comes on brightly for 1 to 6 seconds.

2) Make sure the COWL VALVE OPEN light goes dimly after 6 seconds.

SUBTASK 30-11-41-720-002

(4) Check the cowl thermal anti-ice (TAI) duct pressure switch inputs to the engine and wing anti-ice panel:

(a) Open these circuit breakers and install safety tags:

CAPT Electrical System Panel, P18-3

Row	Col	Number	Name
A	6	C00148	ANTI-ICE & RAIN ENG 1 & WING CONT
A	7	C01001	ANTI-ICE & RAIN ENG 1 COWL AI VALVE

(b) Remove the electrical connector from the left cowl TAI duct pressure switch.

(c) Connect a jumper wire between pins 1 and 2 of the electrical connector.

1) Make sure the left COWL ANTI-ICE light comes on.

(d) Remove the jumper wire.

(e) Connect the electrical connector to the pressure switch.

1) Put the ENG ANTI-ICE 1 switch in the OFF position.

2) Make sure the left COWL ANTI-ICE light goes off.

(f) Remove the safety tags and close these circuit breakers:

CAPT Electrical System Panel, P18-3

Row	Col	Number	Name
A	6	C00148	ANTI-ICE & RAIN ENG 1 & WING CONT
A	7	C01001	ANTI-ICE & RAIN ENG 1 COWL AI VALVE

(g) Open these circuit breakers and install safety tags:

CAPT Electrical System Panel, P18-3

Row	Col	Number	Name
B	6	C00149	ANTI-ICE & RAIN ENGINE 2 CONTROL
B	7	C01002	ANTI-ICE & RAIN ENG 2 COWL AI VALVE

(h) Remove the electrical connector from the right cowl TAI duct pressure switch.

(i) Connect a jumper wire between pins 1 and 2 of the electrical connector.

1) Make sure the right COWL ANTI-ICE light comes on.

ECCN 9E991 BOEING PROPRIETARY - See title page for details

(j) Remove the jumper wire.

(k) Connect the electrical connector to the pressure switch.

1) Put the ENG ANTI-ICE 2 switch in the OFF position.

2) Make sure the right COWL ANTI-ICE light goes off.

(l) Remove the safety tags and close these circuit breakers:

CAPT Electrical System Panel, P18-3

Row	Col	Number	Name
B	6	C00149	ANTI-ICE & RAIN ENGINE 2 CONTROL
B	7	C01002	ANTI-ICE & RAIN ENG 2 COWL AI VALVE

SUBTASK 30-11-41-860-009

(5) Make sure the engine and wing anti-ice panel commands the cowl anti-icing valves closed:

(a) Put the ENG ANTI-ICE 1 switch in the OFF position.

1) Make sure the left COWL VALVE OPEN light comes on brightly for 1 to 3 seconds.

2) Make sure the COWL VALVE OPEN light goes off after 3 seconds.

(b) Put the ENG ANTI-ICE 2 switch in the OFF position.

1) Make sure the right COWL VALVE OPEN light comes on brightly for 1 to 3 seconds.

2) Make sure the COWL VALVE OPEN light goes off after 3 seconds.

G. Put the airplane back to its usual condition.

SUBTASK 30-11-41-440-001

(1) Do this task: Weather Radar (WXR) System - Activation, TASK 34-43-00-440-801.

SUBTASK 30-11-41-410-001

(2) Close the right fan cowl panel. To do this, do this task: Close the Fan Cowl Panels, TASK 71-11-02-410-801-F00.

SUBTASK 30-11-41-860-010

(3) Do this task: Remove Pressure from the Pneumatic System, TASK 36-00-00-860-806.

SUBTASK 30-11-41-860-011

(4) If electrical power is no longer necessary, do this task: Remove External Power, TASK 24-22-00-860-814.

END OF TASK

ECCN 9E991 BOEING PROPRIETARY - See title page for details

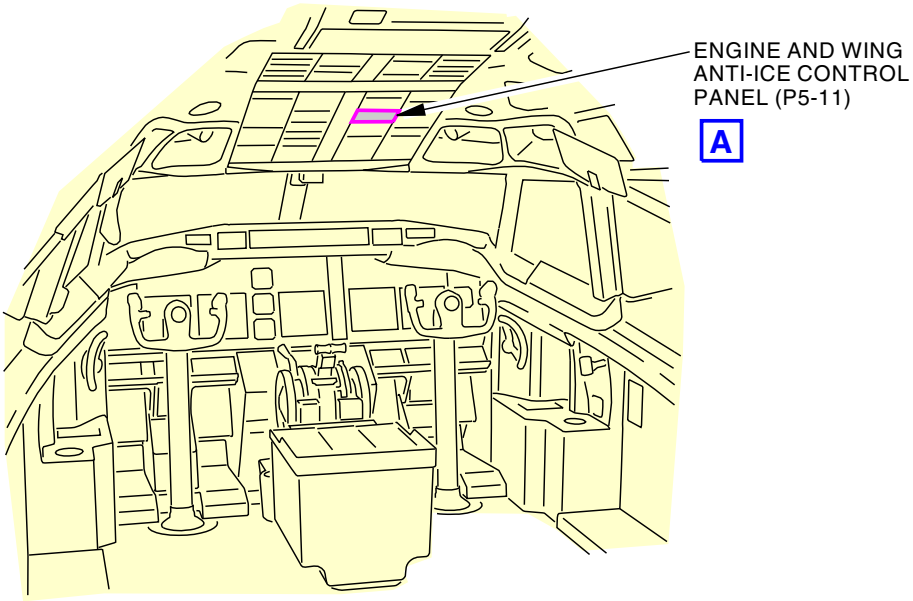

FLIGHT COMPARTMENT

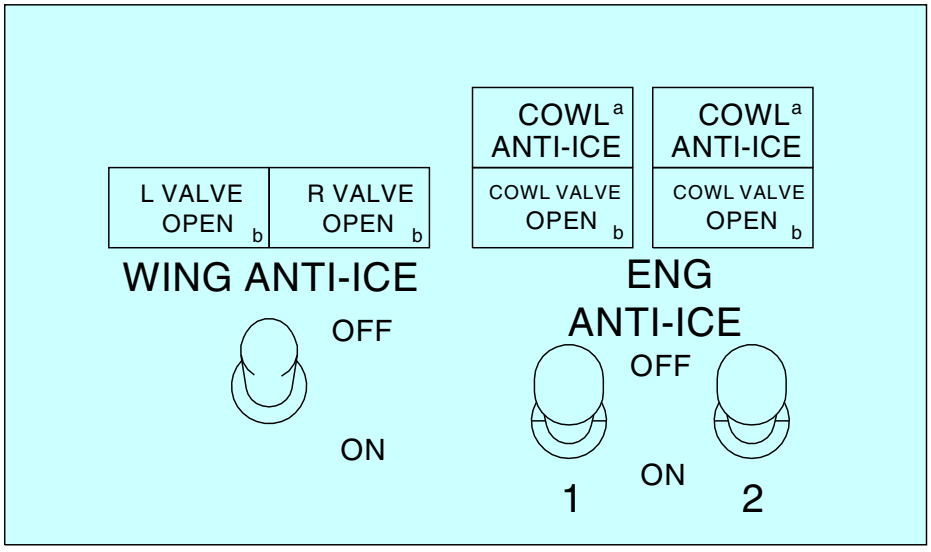

ENGINE AND WING ANTI-ICE CONTROL PANEL (P5-11)

A

G02010 S0006573085_V2

Engine and Wing Anti-Ice Control Panel Test
Figure 501/30-11-41-990-801 (Sheet 1 of 2)

ECCN 9E991 BOEING PROPRIETARY - See title page for details

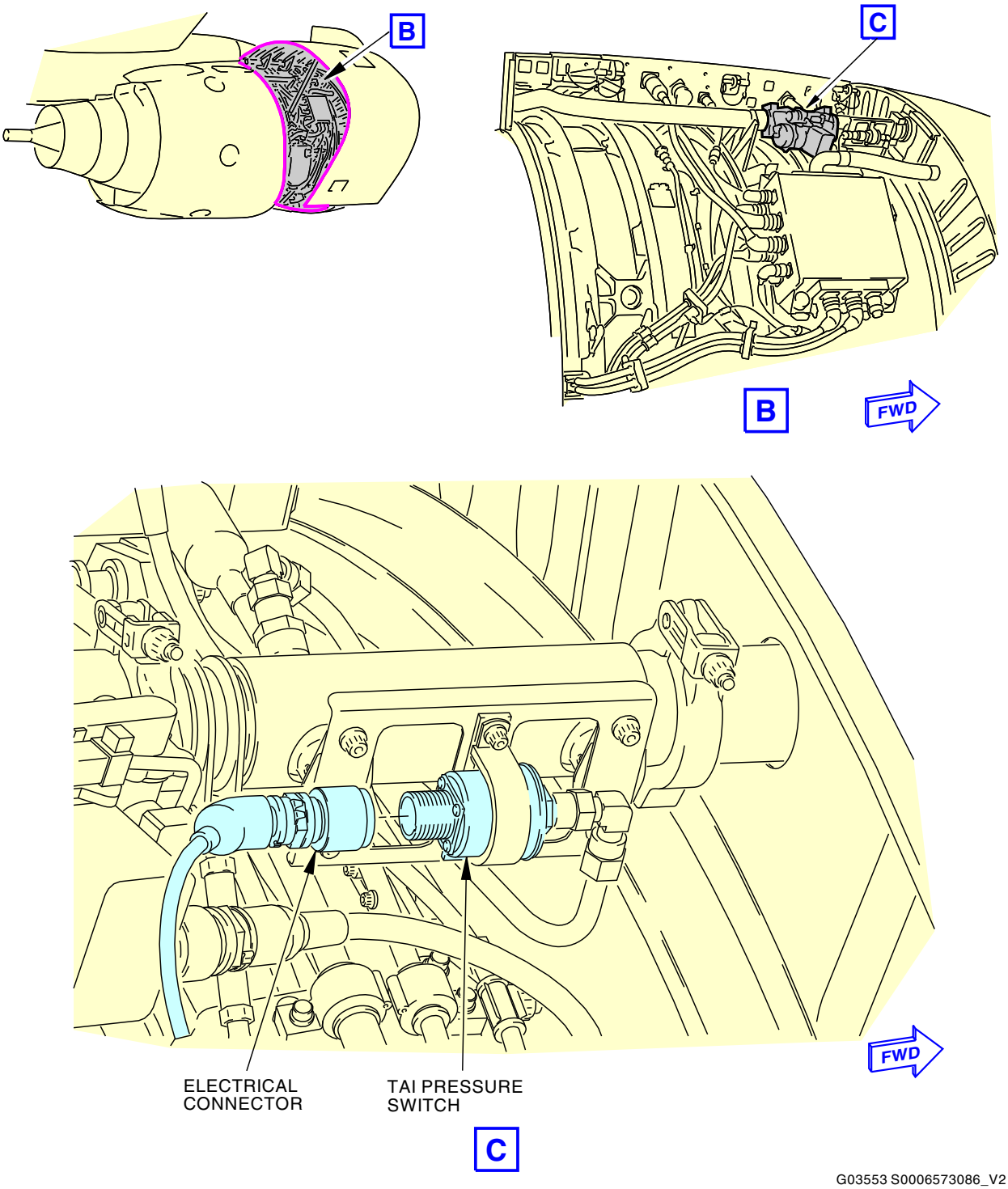

Engine and Wing Anti-Ice Control Panel Test
Figure 501/30-11-41-990-801 (Sheet 2 of 2)

ECCN 9E991 BOEING PROPRIETARY - See title page for details

ENGINE COWL ANTI-ICING SYSTEM - ADJUSTMENT/TEST

1. General

A. This procedure has these tasks:

(1) Test of the Engine Cowl Thermal Anti-Icing System.

TASK 30-21-00-710-801

2. Engine Cowl Anti-Icing - Operational Test

(Figure 501)

A. General

(1) This test makes sure that the cowl Thermal Anti-Ice (TAI) system is operating properly. Specific tests for cowl TAI components are contained in other procedures.

B. References

Reference	Title
36-00-00-860-802	Supply Pressure to the Pneumatic System with an External Ground Air Source (P/B 201)
36-00-00-860-803	Supply Pressure to the Pneumatic System with the APU (P/B 201)
36-00-00-860-806	Remove Pressure from the Pneumatic System (P/B 201)
36-11-04-000-801	PRSOV Removal (P/B 401)
36-11-04-400-801	PRSOV Installation (P/B 401)
71-00-00-700-819-F00	Stop the Engine Procedure (Usual Engine Stop) (P/B 201)
71-00-00-800-807-F00	Start the Engine Procedure (Selection) (P/B 201)
71-11-02-010-801-F00	Open the Fan Cowl Panels (P/B 201)
71-11-02-410-801-F00	Close the Fan Cowl Panels (P/B 201)
78-31-00-010-801-F00	Open the Thrust Reverser (Selection) (P/B 201)
78-31-00-010-804-F00	Close the Thrust Reverser (Selection) (P/B 201)

C. Tools/Equipment

Reference	Description
STD-858	Tag - DO NOT OPERATE

D. Location Zones

Zone	Area
212	Flight Compartment - Right

E. ENG ANTI-ICE Switches and Indication Test

SUBTASK 30-21-00-910-001

> **CAUTION** DO NOT KEEP THE COWL TAI VALVE OPEN FOR MORE THAN THE SPECIFIED TIME WHEN THE TEMPERATURE IS MORE THAN THE SPECIFIED LIMIT. DAMAGE TO THE INLET COWL CAN OCCUR.

(1) If the outside air temperature is more than 50°F (10°C), operate the engine cowl anti-icing system for 30 seconds or less.

NOTE: The temperature limit of 50°F (10°C) is only applicable to the engine cowl anti-ice valve installation/system test.

ECCN 9E991 BOEING PROPRIETARY - See title page for details

SUBTASK 30-21-00-910-002

(2) There is no time limit for operation of the engine cowl anti-icing system when the temperature is at or less than 50°F (10°C).

SUBTASK 30-21-00-840-002

(3) Do one of the following steps to provide pneumatic pressure for the ducts:

(a) Use the engines to pressurize the TAI duct, do this task: Start the Engine Procedure (Selection), TASK 71-00-00-800-807-F00.

(b) Use the Auxiliary Power Unit (APU) to pressurize the TAI duct, do this task: Supply Pressure to the Pneumatic System with the APU, TASK 36-00-00-860-803.

(c) Use an external air supply to pressurize the TAI duct, do this task: Supply Pressure to the Pneumatic System with an External Ground Air Source, TASK 36-00-00-860-802.

(d) If you use the APU, external air, or a single engine to pressurize the TAI duct, then do these steps:

1) Put the BLEED 1 and 2 switches on the air conditioning panel in the OFF position.

2) Put the L PACK and R PACK switches on the air conditioning panel in the OFF position.

3) Make sure that the ISOLATION VALVE switch is in the OPEN or AUTO position.

4) If you use the APU or external air to pressurize the TAI duct, then you must manually open thePressure Regulating and Shutoff Valve (PRSOV) valves.

5) If you use the a single engine to pressurize the TAI duct, then you must manually open the PRSOV valve on the non-running engine.

6) Open a PRSOV valve, do these steps on the applicable engine or engines:

WARNING DO THESE SPECIFIED TASKS IN THE CORRECT SEQUENCE BEFORE YOU OPEN THE THRUST REVERSERS: RETRACT THE LEADING EDGE, DO THE DEACTIVATION PROCEDURES FOR THE LEADING EDGE AND THE THRUST REVERSER (FOR GROUND MAINTENANCE), AND OPEN THE FAN COWL PANELS. IF YOU DO NOT OBEY THE ABOVE SEQUENCE, INJURIES TO PERSONS AND DAMAGE TO EQUIPMENT CAN OCCUR.

a) Open the left thrust reverser, do this task: Open the Thrust Reverser (Selection), TASK 78-31-00-010-801-F00.

b) Put the applicable engine BLEED switch, on the P5-10 forward overhead panel, to the ON position.

c) Use a wrench on the manual override nut for the PRSOV to put it to the OPEN position.

d) Make sure that the PRSOV stays in the OPEN position.

NOTE: The PRSOV is spring-loaded to the closed position. If there is pressure supplied and the PRSOV does not stay open, there may be a leakage in the PRSOV or in the sense line(s).

SUBTASK 30-21-00-860-003

(4) Do this test of the COWL VALVE OPEN and COWL ANTI-ICE light switches:

(a) Push and release the COWL VALVE OPEN and COWL ANTI-ICE light switches on the P5-11 panel.

ECCN 9E991 BOEING PROPRIETARY - See title page for details

(b) Make sure that each light comes on then goes off.

SUBTASK 30-21-00-860-004

(5) Make sure that the engine and wing anti-ice panel commands the cowl TAI valves open.

NOTE: If the COWL VALVE OPEN lights remain illuminated bright with engines at IDLE, position APU BLEED air switch to OFF and increase thrust slightly (up to a maximum of 30% N1).

(a) Put the ENG ANTI-ICE 1 switch in the ON position.

1) Make sure that the left COWL VALVE OPEN light comes on brightly within 6 seconds.

2) Make sure that the COWL VALVE OPEN light becomes dim after it comes on brightly.

3) Make sure that the green TAI indication shows on the Common Display System (CDS) display above the left N1 speed display.

(b) Put the ENG ANTI-ICE 2 switch in the ON position.

1) Make sure that the right COWL VALVE OPEN light comes on brightly within 6 seconds.

2) Make sure that the COWL VALVE OPEN light becomes dim after it comes on brightly.

3) Make sure that the green TAI indication shows on the CDS display above the right N1 speed display.

SUBTASK 30-21-00-860-005

(6) Make sure that the engine and wing anti-ice panel commands the cowl TAI valves closed.

(a) Put the ENG ANTI-ICE 1 switch in the OFF position.

1) Make sure that the left COWL VALVE OPEN light comes on brightly within 3 seconds.

2) Make sure that the COWL VALVE OPEN light then goes off.

(b) Put the ENG ANTI-ICE 2 switch in the OFF position.

1) Make sure that the right COWL VALVE OPEN light comes on brightly within 3 seconds.

2) Make sure that the COWL VALVE OPEN light then goes off.

SUBTASK 30-21-00-860-010

(7) Allow the PRSOV to return to the CLOSED position by spring force only.

NOTE: It is allowable to use slight hand pressure on the wrench at the end of the stroke to assist the valve to the full closed position.

The valve is designed to have air pressure to assist the valve closure to overcome the resistance of the valve's butterfly seal.

(a) If the PRSOV does not move smooth or return to the CLOSED position on the third cycle, replace the valve, do these tasks:

- PRSOV Removal, TASK 36-11-04-000-801,
- PRSOV Installation, TASK 36-11-04-400-801.

SUBTASK 30-21-00-860-006

(8) If you used the engines to pressurize the TAI ducts, then stop the engines.

ECCN 9E991 BOEING PROPRIETARY - See title page for details

(a) Do this task: Stop the Engine Procedure (Usual Engine Stop), TASK 71-00-00-700-819-F00.

SUBTASK 30-21-00-860-009

(9) If you used the APU or external air to pressurize the TAI ducts, do this task: Remove Pressure from the Pneumatic System, TASK 36-00-00-860-806.

SUBTASK 30-21-00-860-007

(10) Make sure that the fuel shutoff levers are in the cutoff position and install the DO NOT OPERATE tags, STD-858.

SUBTASK 30-21-00-010-001

(11) For the right fan cowl panel, do this task: Open the Fan Cowl Panels, TASK 71-11-02-010-801-F00.

SUBTASK 30-21-00-720-004

(12) Do this test of the left cowl TAI duct overpressure detection circuit:

(a) Disconnect the electrical connector from the left engine duct overpressure switch.

(b) Connect a jumper wire between pins 1 and 2 of the connector.

1) Make sure that the left COWL ANTI-ICE light comes on.

(c) Remove the jumper wire from the connector.

(d) Re-connect the connector to the overpressure switch.

(e) Make sure that the left COWL ANTI-ICE light is off.

SUBTASK 30-21-00-720-005

(13) Do this test of the right cowl TAI duct overpressure detection circuit:

(a) Disconnect the electrical connector from the right engine duct overpressure switch.

(b) Connect a jumper wire between pins 1 and 2 of the connector.

1) Make sure that the right COWL ANTI-ICE light comes on.

(c) Remove the jumper wire from the connector.

(d) Connect the connector to the overpressure switch.

(e) Make sure that the right COWL ANTI-ICE light is off.

SUBTASK 30-21-00-720-003

(14) Do this test to make sure that the TAI fault is shown:

(a) Do a test of the left cowl TAI system.

1) Put the ENG ANTI-ICE 1 switch in the ON position.

2) Make sure that the amber TAI indication is shown on the CDS display above the left N1 speed display.

3) Make sure that the left COWL VALVE OPEN light comes on brightly.

4) Put the ENG ANTI-ICE 1 switch in the OFF position.

5) Make sure that the TAI indication on the CDS display goes away.

6) Make sure that the COWL VALVE OPEN light goes off.

(b) Do a test of the right cowl TAI system.

1) Put the ENG ANTI-ICE 2 switch in the ON position.

2) Make sure that the amber TAI indication is shown on the CDS display above the right N1 speed display.

ECCN 9E991 BOEING PROPRIETARY - See title page for details

3) Make sure that the right COWL VALVE OPEN light comes on brightly.
4) Put the ENG ANTI-ICE 2 switch in the OFF position.
5) Make sure that the TAI indication on the CDS display goes away.
6) Make sure that the COWL VALVE OPEN light goes off.

F. Put the Airplane Back to Its Usual Condition

SUBTASK 30-21-00-410-002

> **WARNING** OBEY THE INSTRUCTIONS IN THE PROCEDURE TO CLOSE THE THRUST REVERSERS. IF YOU DO NOT OBEY THE INSTRUCTIONS, INJURIES TO PERSONS AND DAMAGE TO EQUIPMENT CAN OCCUR.

(1) Close the thrust reverser, do this task: Close the Thrust Reverser (Selection), TASK 78-31-00-010-804-F00.

SUBTASK 30-21-00-410-001

(2) Close the right fan cowl panel, do this task: Close the Fan Cowl Panels, TASK 71-11-02-410-801-F00.

SUBTASK 30-21-00-840-001

(3) Remove the DO NOT OPERATE tags, STD-858, from the fuel shutoff levers.

END OF TASK

ECCN 9E991 BOEING PROPRIETARY - See title page for details

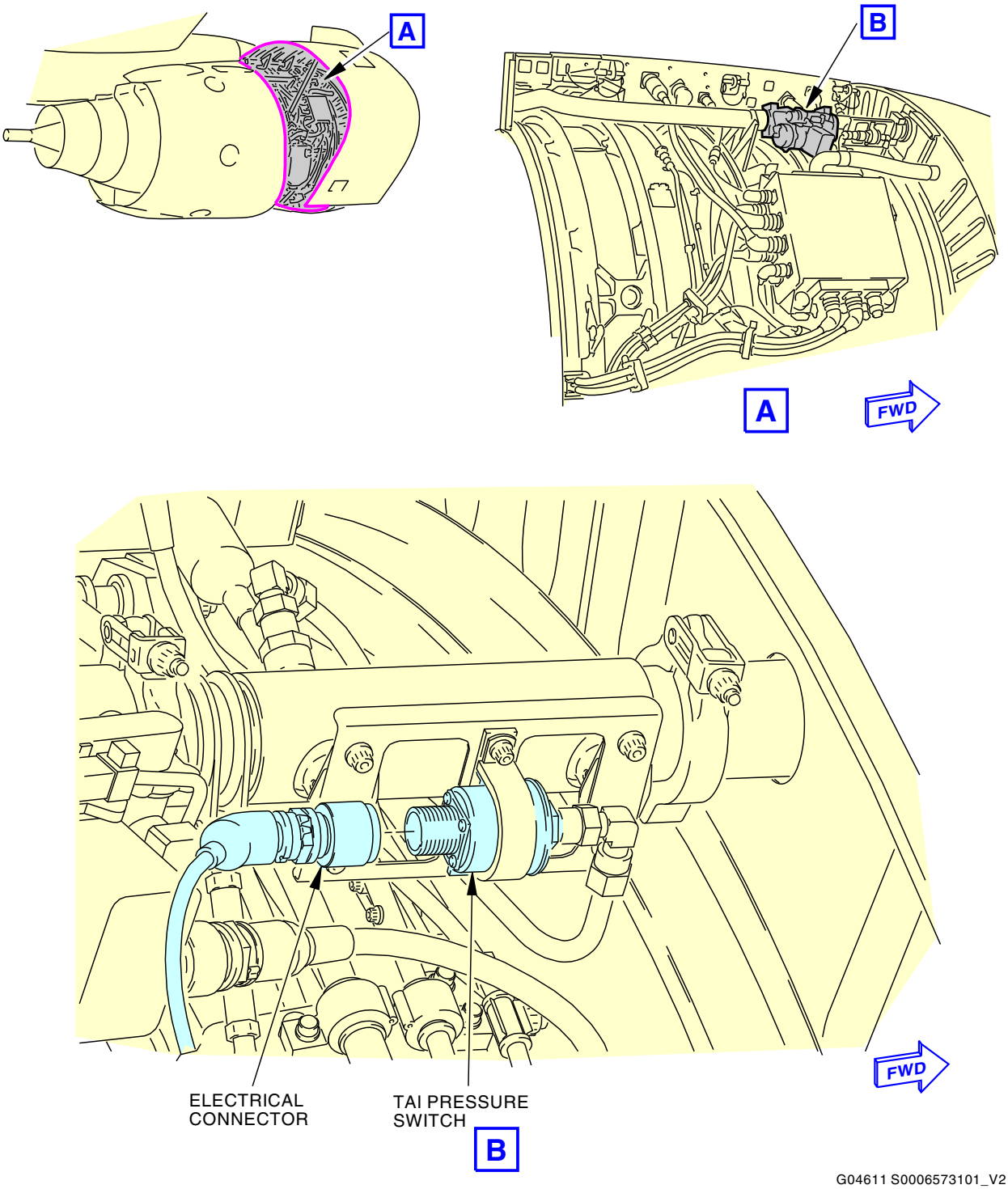

Engine Cowl Anti-Icing Test
Figure 501/30-21-00-990-801 (Sheet 1 of 2)

ECCN 9E991 BOEING PROPRIETARY - See title page for details

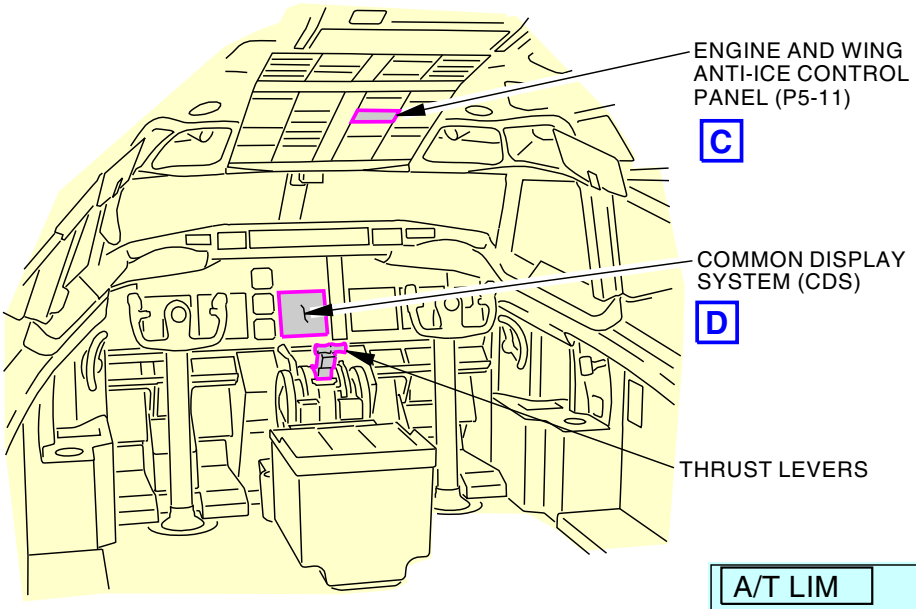

FLIGHT COMPARTMENT

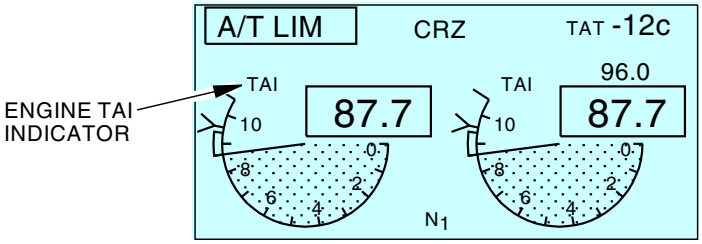

COMMON DISPLAY SYSTEM

D

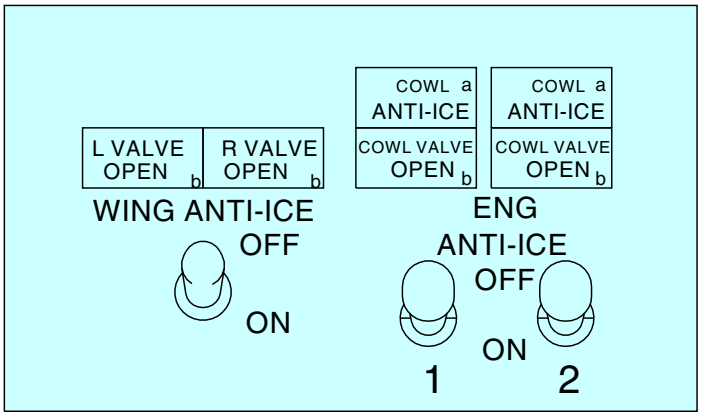

ENGINE AND WING ANTI-ICE CONTROL PANEL (P5-11)

C

G04607 S0006573102_V2

Engine Cowl Anti-Icing Test
Figure 501/30-21-00-990-801 (Sheet 2 of 2)

ECCN 9E991 BOEING PROPRIETARY - See title page for details

ENGINE COWL TAI VALVE - REMOVAL/INSTALLATION

1. **General**
   A. This procedure has tasks:
      (1) The removal of the engine cowl TAI valve
      (2) The installation of the engine cowl TAI valve.
   B. The engine cowl TAI valve is at the 2 o'clock position on the right side of the engine fan case.

TASK 30-21-11-000-801

2. **Engine Cowl TAI Valve - Removal**
(Figure 401)

A. General
(1) This task gives instructions to remove the Engine Cowl TAI Valve.
(2) For this procedure the engine cowl TAI valve will be referred to as the valve.

B. References

Reference	Title
36-00-00-860-806	Remove Pressure from the Pneumatic System (P/B 201)
71-11-02-010-801-F00	Open the Fan Cowl Panels (P/B 201)

C. Tools/Equipment

NOTE: When more than one tool part number is listed under the same "Reference" number, the tools shown are alternates to each other within the same airplane series. Tool part numbers that are replaced or non-procurable are preceded by "Opt:", which stands for Optional.

Reference	Description
COM-2481	Sealant Removal Tool (Meets BSS7384 Requirements) Part #: 1-6390-A Supplier: 63318 Part #: 10810 Supplier: $0855 Part #: 10811 Supplier: $0855 Part #: 10812 Supplier: $0855 Part #: 234350 Supplier: 5HCF1 Part #: 235072 Supplier: 5HCF1 Part #: 235073 Supplier: 5HCF1 Part #: 235074 Supplier: 5HCF1 Part #: 235075 Supplier: 5HCF1 Part #: 235076 Supplier: 5HCF1 Part #: 311/03 Supplier: F6892 Part #: 311/14 Supplier: F6892 Part #: 311/25 Supplier: F6892 Part #: 311/37 Supplier: F6892 Part #: AS1 Supplier: $1351 Part #: AS2 Supplier: $1351 Part #: AS3 Supplier: $1351 Part #: DAD5013 Supplier: 7RKH2 Part #: DFD5019 Supplier: 7RKH2 Part #: JNT411B60 Supplier: 3DN12 Part #: JNT411B90 Supplier: 3DN12 Part #: PT6529-S Supplier: 81205 Part #: SCD5019 Supplier: 7RKH2 Part #: ST982LF-9 Supplier: 81205 Part #: TS1275-4 Supplier: 22975

ECCN 9E991 BOEING PROPRIETARY - See title page for details

(Continued)

Reference	Description
COM-4746	Handle - Sealant Removal Tool Part #: 310/1 (for SkyScraper) Supplier: F6892 Part #: SHR0272-T (for PnJ scraper) Supplier: 7RKH2 Part #: ST982LH-F-3 (for ST982LF) Supplier: 81205 Opt Part #: SHW0215 (for PnJ scraper) Supplier: 7RKH2
COM-4747	Pneumatic Scraper Sharpener Part #: 501/1 Supplier: F6892 Opt Part #: 309/3 Supplier: F6892
STD-858	Tag - DO NOT OPERATE

D. Consumable Materials

Reference	Description	Specification
G00270	Tape - Scotch Flatback Masking 250	ASTM D6123 (Supersedes A-A-883)
G02173	Paper - Wrapping, Chemically Neutral (Non-Corrosive)	MIL-DTL-17667 (Supersedes MIL-P-17667)
G50260	Sandpaper - Aluminum Oxide, 220 Grit	
G50261	Sandpaper - Aluminum Oxide, 400 Grit	BAC5000
G50262	Wiper - Cleaning	BMS15-5
G50319	Wrap - Protective, Bubble	PPP-C-795 CLASS II

E. Location Zones

Zone	Area
410	Subzone - Engine 1
420	Subzone - Engine 2

F. Prepare for the Removal

SUBTASK 30-21-11-860-001

(1) To remove the valve on the No. 1 power plant, do this step:

(a) Open these circuit breakers and install safety tags:

CAPT Electrical System Panel, P18-3

Row	Col	Number	Name
A	6	C00148	ANTI-ICE & RAIN ENG 1 & WING CONT
A	7	C01001	ANTI-ICE & RAIN ENG 1 COWL AI VALVE

SUBTASK 30-21-11-860-002

(2) To remove the valve on the No. 2 power plant, do this step:

(a) Open these circuit breakers and install safety tags:

CAPT Electrical System Panel, P18-3

Row	Col	Number	Name
B	6	C00149	ANTI-ICE & RAIN ENGINE 2 CONTROL
B	7	C01002	ANTI-ICE & RAIN ENG 2 COWL AI VALVE

SUBTASK 30-21-11-860-003

(3) Do these steps to make sure that the ENGINE START switch and the START LEVER switch are not operated:

ECCN 9E991 BOEING PROPRIETARY - See title page for details

(a) On the P5 overhead panel, make sure that the applicable ENGINE START switch is in the AUTO or OFF position.

1) Put a DO NOT OPERATE tag, STD-858, on the applicable ENGINE START switch.

(b) On the P10 control stand, make sure that the applicable START LEVER switch is in the CUTOFF position.

1) Put a DO NOT OPERATE tag, STD-858, on the applicable START LEVER switch.

SUBTASK 30-21-11-860-004

(4) If not already done, do this task: Remove Pressure from the Pneumatic System, TASK 36-00-00-860-806.

SUBTASK 30-21-11-010-001

(5) For the right fan cowl panel, do this task: Open the Fan Cowl Panels, TASK 71-11-02-010-801-F00.

SUBTASK 30-21-11-860-021

CAUTION	APPLY THE PROTECTIVE BARRIER IN THE AREA OF THE TAI VALVE OF THE ENGINE COWL. THE NICKS, DENTS AND SCRATCHES CAN OCCUR ON THE FAN CONTAINMENT CASE, ALUMINUM SKIN AND FLANGES. IF YOU DO NOT OBEY, DAMAGE TO EQUIPMENT CAN OCCUR.

(6) Install the protective cover to the flange B1 and around the flange in the area of the engine cowl TAI valve.

(a) Use one of these as protective cover:

- The wrapping paper, G02173, with Scotch Flatback Masking Tape 250, G00270
- The bubble wrap, G50319
- Rubber Mat
- Cardboard
- Cotton Shop Towels.

G. Engine Cowl TAI Valve Removal

SUBTASK 30-21-11-020-001

(1) Disconnect the electrical connector DP1303 [10] from the valve [5].

SUBTASK 30-21-11-020-002

(2) Remove the bolt [6], washer [7], and nut [9] that attach the bonding jumper [8] to the valve [5].

(a) Move the bonding jumper [8] away from the valve [5].

SUBTASK 30-21-11-020-007

(3) If it is necessary to remove the bonding jumper [8] from the flange, do these steps:

CAUTION	MAKE SURE THAT YOU ONLY USE APPROVED SCRAPERS ON THE AIRPLANE SKIN. SCRAPERS THAT ARE NOT APPROVED CAN MAKE SCRATCHES ON THE SKIN AND CAUSE FATIGUE CRACKS.

(a) Remove all of the sealant from the connection of the bonding jumper [8] and flange.

1) Use a sealant removal tool, COM-2481, and sealant removal tool handle, COM-4746.

2) If it is necessary, do these steps to sharpen the scraper.

ECCN 9E991 BOEING PROPRIETARY - See title page for details

a) Sharpen the scraper with sandpaper, G50260, or finer by hand or by metal sharpening wheel (scraper sharpener, COM-4747).

b) If the scraper is sharpened by hand, rub the sharpened scraper on a wiper, G50262, to remove loose sanding particles.

c) If a metal sharpening wheel is used, rub the sharpened scraper on sandpaper, G50261, or finer aluminum oxide paper to remove debris and then rub it on wiper, G50262, to remove loose sanding particles.

(b) Remove the bolt [13], washers [14], and nut [15], that attach the bonding jumper [8] to the flange.

(c) Remove the bonding jumper [8].

SUBTASK 30-21-11-020-003

(4) Remove the bolts [11] and nuts [12] that attach the aft duct to the fan case bracket.

SUBTASK 30-21-11-020-004

(5) Do these steps to remove the valve [5]:

(a) Disconnect the couplings [1] at each end of the valve [5].

CAUTION

DO NOT APPLY TOO MUCH FORCE TO THE AFT DUCT. DAMAGE TO THE AFT DUCT CAN OCCUR.

(b) Push the aft duct rearward to disengage the duct flanges.

NOTE: Temporary support can be installed between the fan case bracket and the aft duct to hold the duct in this position. This will make the removal of the valve easier.

(c) Remove the valve [5] from the engine.

(d) Remove the seal [2] from the forward end of the valve [5] and aft duct flange.

(e) Install the protective covers on the openings of the ducts and valve [5].

END OF TASK

ECCN 9E991 BOEING PROPRIETARY - See title page for details

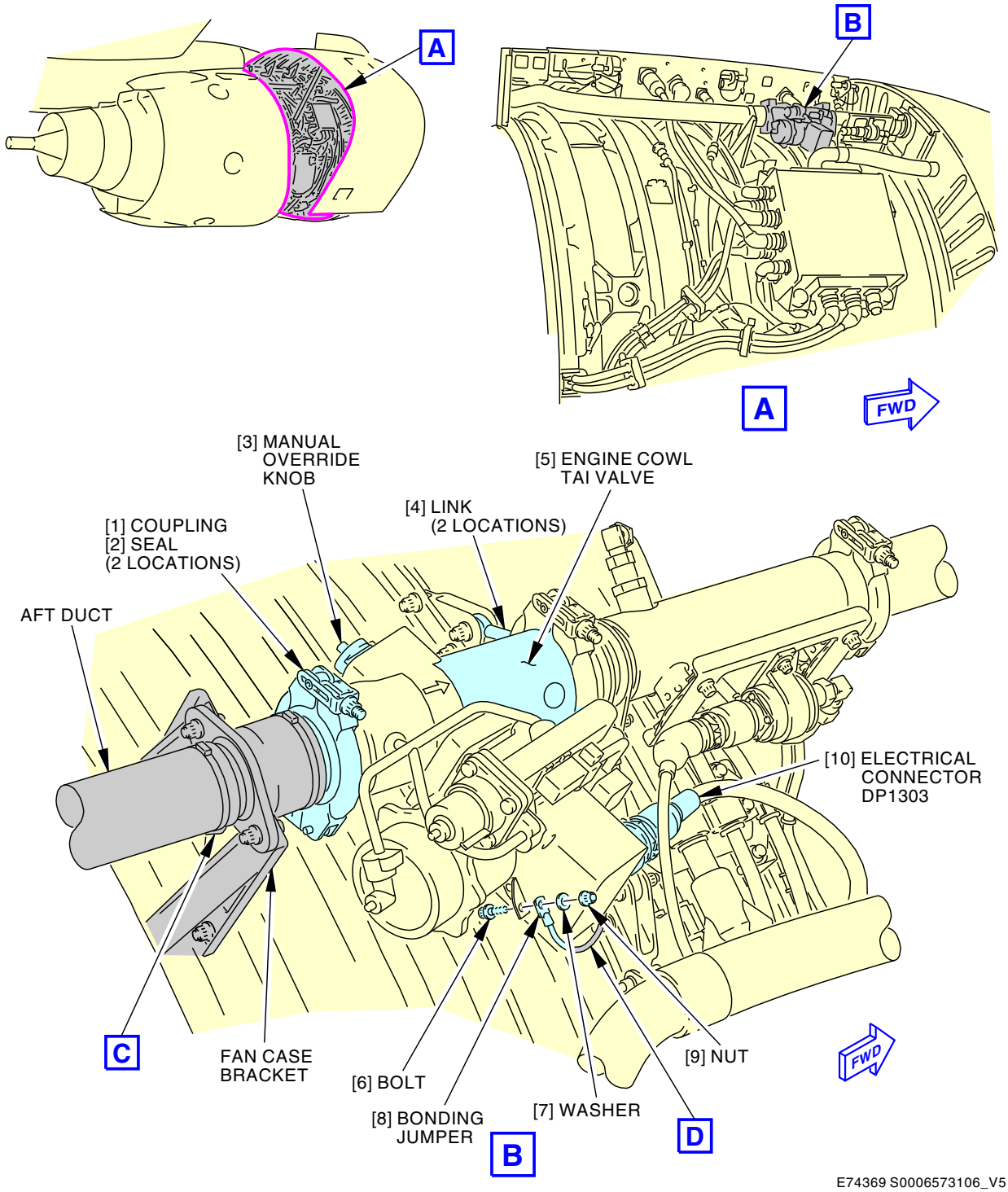

Engine Cowl TAI Valve Installation
Figure 401/30-21-11-990-801 (Sheet 1 of 3)

ECCN 9E991 BOEING PROPRIETARY - See title page for details

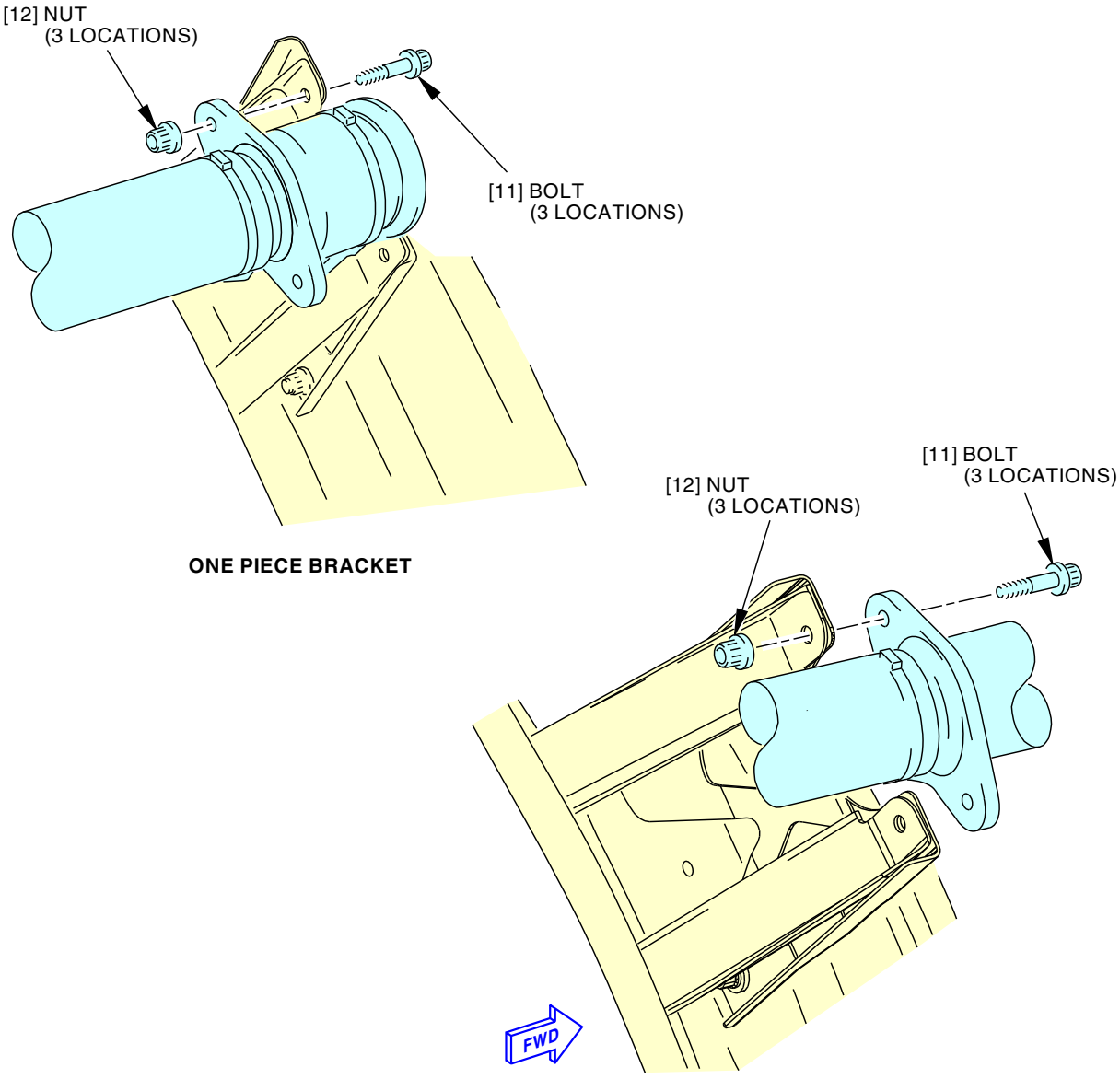

C

2349786 S0000533114_V3

Engine Cowl TAI Valve Installation
Figure 401/30-21-11-990-801 (Sheet 2 of 3)

ECCN 9E991 BOEING PROPRIETARY - See title page for details

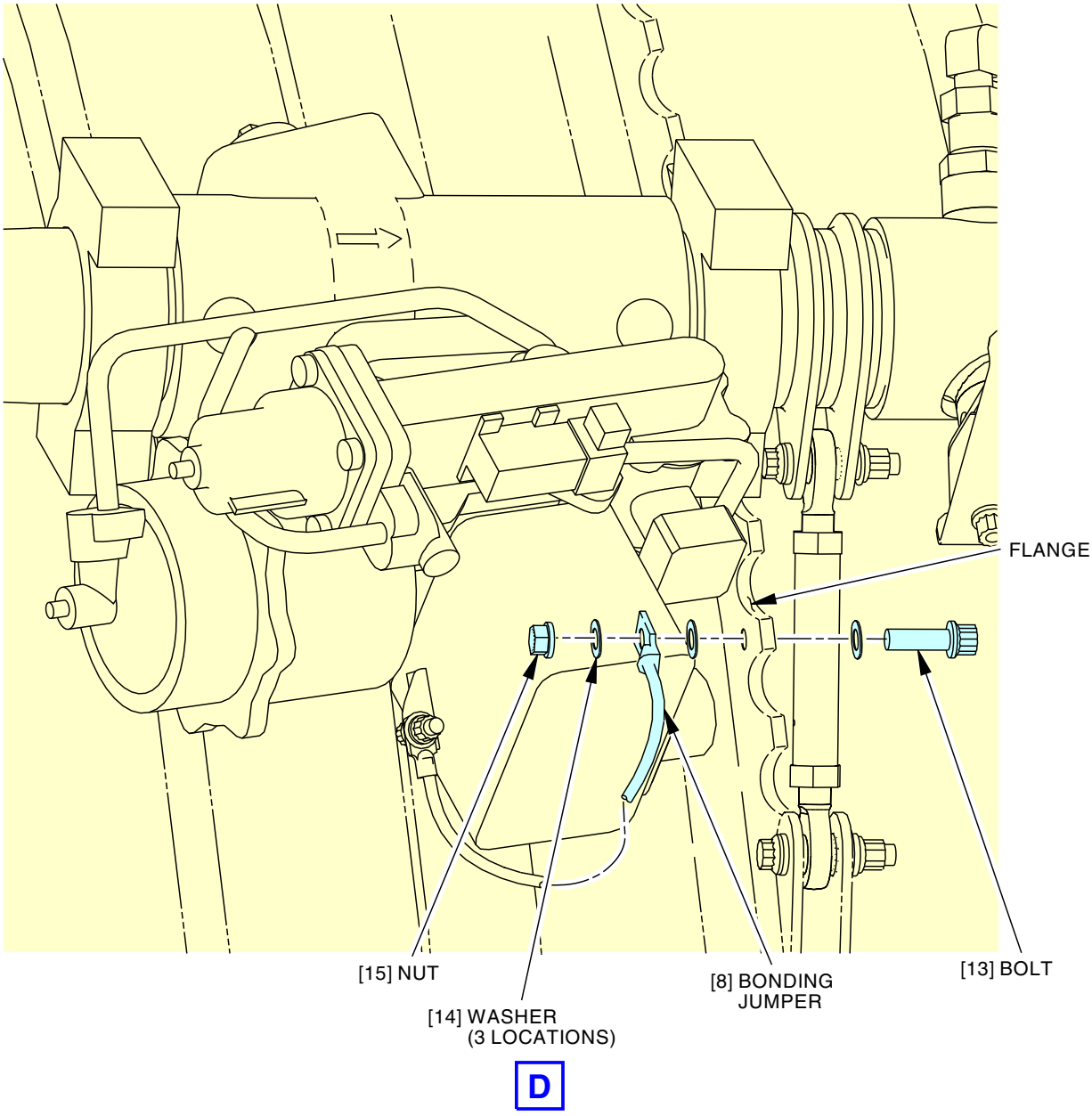

2967679 S0000747066_V1

Engine Cowl TAI Valve Installation
Figure 401/30-21-11-990-801 (Sheet 3 of 3)

ECCN 9E991 BOEING PROPRIETARY - See title page for details

TASK 30-21-11-400-801

3. Engine Cowl TAI Valve - Installation

(Figure 401)

A. General

(1) This task gives instructions to install the Engine Cowl TAI Valve.

(2) For this procedure the engine cowl TAI valve will be referred to as the valve.

B. References

Reference	Title
36-00-00-860-802	Supply Pressure to the Pneumatic System with an External Ground Air Source (P/B 201)
36-00-00-860-803	Supply Pressure to the Pneumatic System with the APU (P/B 201)
36-00-00-860-806	Remove Pressure from the Pneumatic System (P/B 201)
71-00-00-700-819-F00	Stop the Engine Procedure (Usual Engine Stop) (P/B 201)
71-00-00-800-807-F00	Start the Engine Procedure (Selection) (P/B 201)
71-11-02-410-801-F00	Close the Fan Cowl Panels (P/B 201)
78-31-00-010-801-F00	Open the Thrust Reverser (Selection) (P/B 201)
78-31-00-010-804-F00	Close the Thrust Reverser (Selection) (P/B 201)

C. Tools/Equipment

NOTE: When more than one tool part number is listed under the same "Reference" number, the tools shown are alternates to each other within the same airplane series. Tool part numbers that are replaced or non-procurable are preceded by "Opt:", which stands for Optional.

Reference	Description
COM-614	Bonding Meters - Non-Intrinsically Safe (For use in outside Class I, Divisions I & II non-hazardous locations. For hazardous locations, use COM-1550). Part #: 247000 Supplier: 00426 Part #: 620LK Supplier: 1CRL2 Part #: BLR-0003-XX Supplier: KC432 Part #: BT51 Supplier: 00426 Part #: M1 Supplier: 3AD17 Part #: M1B Supplier: 3AD17 Part #: T477W (C15292) Supplier: 06659 Opt Part #: 247001 Supplier: 00426
STD-1014	Wrench - Torque, 0 to 150 in-lbs (0 to 16.9 N-m)
STD-3906	Mallet - Rubber

D. Consumable Materials

Reference	Description	Specification
A50102	Adhesive - Silicone, RTV 102 (Supersedes RTV 174)	
B00130	Alcohol - Isopropyl	TT-I-735
G00270	Tape - Scotch Flatback Masking 250	ASTM D6123 (Supersedes A-A-883)
G01048	Lockwire - MS20995C32, Corrosion Resistant Steel - 0.032 Inch (0.8128 mm) Diameter	NASM20995

ECCN 9E991 BOEING PROPRIETARY - See title page for details

(Continued)

Reference	Description	Specification
G02173	Paper - Wrapping, Chemically Neutral (Non-Corrosive)	MIL-DTL-17667 (Supersedes MIL-P-17667)
G50319	Wrap - Protective, Bubble	PPP-C-795 CLASS II

E. Expendables/Parts

AMM Item	Description	AIPC Reference	AIPC Effectivity
2	Seal	30-21-11-01A-125	LOM ALL
5	Valve	30-21-11-01A-250	LOM ALL

F. Location Zones

Zone	Area
410	Subzone - Engine 1
420	Subzone - Engine 2

G. Prepare for the Installation

SUBTASK 30-21-11-860-016

(1) To install the valve on the No. 1 power plant, to this step:

(a) Make sure that these circuit breakers are open and have safety tags:

CAPT Electrical System Panel, P18-3

Row	Col	Number	Name
A	6	C00148	ANTI-ICE & RAIN ENG 1 & WING CONT
A	7	C01001	ANTI-ICE & RAIN ENG 1 COWL AI VALVE

SUBTASK 30-21-11-860-023

(2) To install the valve on the No. 2 power plant, to this step:

(a) Make sure that these circuit breakers are open and have safety tags:

CAPT Electrical System Panel, P18-3

Row	Col	Number	Name
B	6	C00149	ANTI-ICE & RAIN ENGINE 2 CONTROL
B	7	C01002	ANTI-ICE & RAIN ENG 2 COWL AI VALVE

SUBTASK 30-21-11-820-001

(3) Look at the manual override knob [3] on the valve [5] and make sure that the valve [5] is not in the LOCKED closed position.

SUBTASK 30-21-11-860-022

CAUTION

APPLY THE PROTECTIVE BARRIER IN THE AREA OF THE TAI VALVE OF THE ENGINE COWL. THE NICKS, DENTS AND SCRATCHES CAN OCCUR ON THE FAN CONTAINMENT CASE, ALUMINUM SKIN AND FLANGES. IF YOU DO NOT OBEY, DAMAGE TO EQUIPMENT CAN OCCUR.

(4) If it is necessary, install a protective cover to the flange B1 and around the flange, in the area of the engine cowl TAI valve.

(a) Use one of these as protective cover:

- The wrapping paper, G02173, with Scotch Flatback Masking Tape 250, G00270
- The bubble wrap, G50319

ECCN 9E991 BOEING PROPRIETARY - See title page for details

- Rubber Mat
- Cardboard
- Cotton Shop Towels.

H. Engine Cowl TAI Valve Installation

SUBTASK 30-21-11-420-001

(1) Remove the protective covers from the ducts and valve [5].

SUBTASK 30-21-11-210-001

(2) Examine the seal [2] as follows:

(a) Make sure that the seal [2] do not have cracks, dents, or other damage.

(b) Replace all damaged seal [2].

SUBTASK 30-21-11-420-002

(3) Do these steps to install the valve [5]:

> **CAUTION** DO NOT APPLY TOO MUCH FORCE TO THE AFT DUCT. DAMAGE TO THE AFT DUCT CAN OCCUR.

(a) If removed, install a temporary support between the aft duct and fan case bracket to move the aft duct rearward.

NOTE: Temporary support can be installed between the fan case bracket and aft duct to hold the duct in this position. This will make the installation of the valve easier.

(b) Install a seal [2] in the forward end of the valve [5] and on the aft duct flange.

(c) Install the valve [5] between the ducts.

1) Make sure that the flow arrow points forward and locking feature on the downstream flange is correctly engaged.

(d) Remove the temporary support between the aft duct and fan case bracket.

(e) Loosely install the coupling [1] to attach the valve [5] to the ducts.

1) Make sure that the coupling nuts on the couplings are on top and the nuts face outboard.

> **CAUTION** MAKE SURE THAT THE COUPLINGS DO NOT APPLY A FORCE ON THE DUCTS OR THE INLET-COWL TAI VALVE. IF YOU DO NOT OBEY, DAMAGE TO THE EQUIPMENT CAN OCCUR.

(f) Do these steps to tighten the coupling [1]:

1) If it is difficult to attach the valve [5] to the adjacent ducts, remove the lockwire from the link [4] and adjust the links until no force is applied to the ducts or the valve [5].

2) Tighten the link [4] and install a MS20995C32 lockwire, G01048.

3) Use a torque wrench, STD-1014, to tighten the coupling [1] to the range specified on the part.

4) Lightly hit the surface of each coupling [1] with a rubber mallet, STD-3906.

5) Use a torque wrench, STD-1014, to tighten the coupling [1] again to the range specified on the part.

6) Install the bolts [11] and nuts [12] that attach the aft duct to the fan case bracket.

ECCN 9E991 BOEING PROPRIETARY - See title page for details

a) Tighten the bolts [11] to 97.0 in-lb (11.0 N·m) - 103.0 in-lb (11.6 N·m).

<1> Use a torque wrench, STD-1014 to tighten the bolts [11].

SUBTASK 30-21-11-020-005

(4) Connect the electrical connector DP1303 [10] to the valve [5].

(a) Make sure that there is clearance between the TAI valve and adjacent structures.

SUBTASK 30-21-11-760-002

(5) If was removed, install the bonding jumper [8] to the flange.

(a) Clean the bonding surface on the flange with alcohol, B00130.

(b) Attach the bonding jumper [8] to the flange with the bolt [13], washers [14], and nut [15].

(c) Use an non-intrinsically safe bonding meter, COM-614, to measure the resistance between the bonding jumper [8] and aircraft structure.

LOM 402, 404, 406, 407, 411, 412, 415, 416, 420, 422-434, 437-447, 450-460, 464, 465

1) Make sure that the resistance is 0.001 ohm (1.0 milliohm) or less.

LOM 461-463, 466-999

2) Make sure that the resistance is 0.008 ohms (8.0 milliohms) or less.

LOM ALL

(d) Apply the adhesive, A50102, around the connection to encapsulate the bolt [13], washers [14], and nut [15].

SUBTASK 30-21-11-760-001

(6) Do these steps to connect the bonding jumper [8] to the valve [5]:

(a) Clean the bonding surface on the valve [5] with alcohol, B00130.

(b) Attach the bonding jumper [8] to the valve [5] with the bolt [6], washer [7], and nut [9].

NOTE: To minimize slack between the two attached lugs of the bonding jumper, rotate the lug at the valve forward and/or the lug on the fan case toward the upward 12 o'clock position of the fan case. Do not allow any riding condition (slack) of the jumper on the valve or the engine fan case.

(c) Use an non-intrinsically safe bonding meter, COM-614, to measure the resistance between the bonding jumper [8] and valve [5].

1) Make sure that the resistance is 0.008 ohms (8.0 milliohms) or less.

I. Engine Cowl TAI Valve Installation Test

SUBTASK 30-21-11-860-009

(1) For the valve on the No. 1 power plant, to this step:

(a) Remove the safety tags and close these circuit breakers:

CAPT Electrical System Panel, P18-3

Row	Col	Number	Name
A	6	C00148	ANTI-ICE & RAIN ENG 1 & WING CONT
A	7	C01001	ANTI-ICE & RAIN ENG 1 COWL AI VALVE

SUBTASK 30-21-11-860-024

(2) For the valve on the No. 2 power plant, to this step:

ECCN 9E991 BOEING PROPRIETARY - See title page for details

(a) Close these circuit breakers:

CAPT Electrical System Panel, P18-3

Row	Col	Number	Name
B	6	C00149	ANTI-ICE & RAIN ENGINE 2 CONTROL
B	7	C01002	ANTI-ICE & RAIN ENG 2 COWL AI VALVE

SUBTASK 30-21-11-910-001

CAUTION

DO NOT KEEP THE COWL TAI VALVE OPEN FOR MORE THAN THE SPECIFIED TIME WHEN THE TEMPERATURE IS MORE THAN THE SPECIFIED LIMIT. DAMAGE TO THE INLET COWL CAN OCCUR.

(3) If the outside air temperature is more than 50°F (10°C), operate the engine cowl anti-icing system for 30 seconds or less.

(4) There is no time limit for operation of the engine cowl anti-icing system when the temperature is at or less than 50°F (10°C).

SUBTASK 30-21-11-840-001

(5) Do one of the following steps to provide pneumatic pressure for the ducts:

(a) To use the engines to pressurize the TAI duct, do this task: Start the Engine Procedure (Selection), TASK 71-00-00-800-807-F00.

(b) To use the Auxiliary Power Unit (APU) to pressurize the TAI duct, do this task: Supply Pressure to the Pneumatic System with the APU, TASK 36-00-00-860-803.

(c) To use an external air supply to pressurize the TAI duct, do this task: Supply Pressure to the Pneumatic System with an External Ground Air Source, TASK 36-00-00-860-802.

(d) If the APU, external air, or a single engine is used to pressurize the TAI duct, then do these steps:

1) Put the BLEED 1 and 2 switches on the air conditioning panel in the OFF position.

2) Put the L PACK and R PACK switches on the air conditioning panel in the OFF position.

3) Make sure that the ISOLATION VALVE switch is in the OPEN or AUTO position.

4) If the APU or external air is used to pressurize the TAI duct, then manually open the PRSOV valves.

5) If the a single engine is used to pressurize the TAI duct, then manually open the PRSOV valve on the non-running engine.

6) Open a PRSOV valve, do these steps on the applicable engine or engines:

WARNING

DO THESE SPECIFIED TASKS IN THE CORRECT SEQUENCE BEFORE YOU OPEN THE THRUST REVERSER: RETRACT THE LEADING EDGE, DO THE DEACTIVATION PROCEDURES FOR THE LEADING EDGE AND THE THRUST REVERSER (FOR GROUND MAINTENANCE), AND OPEN THE FAN COWL PANELS. IF YOU DO NOT OBEY THE ABOVE SEQUENCE, INJURIES TO PERSONS AND DAMAGE TO EQUIPMENT CAN OCCUR.

a) Open the left thrust reverser, do this task: Open the Thrust Reverser (Selection), TASK 78-31-00-010-801-F00.

ECCN 9E991 BOEING PROPRIETARY - See title page for details

b) Put the applicable engine BLEED switch, on the P5-10 forward overhead panel, to the ON position.

WARNING PRESSURIZE THE BLEED AIR SYSTEM BEFORE YOU OPEN THE PRSOV. WHEN YOU OPEN THE PRSOV, USE A RACHET TYPE WRENCH. THE PRSOV CAN OPEN QUICKLY AND THIS CAN CAUSE THE HANDLE OF THE WRENCH TO TURN. THIS CAN CAUSE INJURIES TO PERSONS OR DAMAGE TO EQUIPMENT.

c) Use a wrench on the manual override nut for the PRSOV to put it to the OPEN position.

d) Make sure that the PRSOV stays in the OPEN position.

NOTE: The PRSOV is spring-loaded to the closed position. If there is pressure supplied and the PRSOV does not stay open, there may be a leakage in the PRSOV or in the sense line(s).

WARNING OBEY THE INSTRUCTIONS IN THE PROCEDURE TO CLOSE THE THRUST REVERSERS. IF YOU DO NOT OBEY THE INSTRUCTIONS WHEN YOU CLOSE THE THRUST REVERSERS, INJURIES TO PERSONS OR DAMAGE TO EQUIPMENT CAN OCCUR.

e) Close the thrust reverser, do this task: Close the Thrust Reverser (Selection), TASK 78-31-00-010-804-F00.

SUBTASK 30-21-11-860-010

(6) Do this test of the COWL VALVE OPEN and COWL ANTI-ICE light switches:

(a) Push and release the COWL VALVE OPEN and COWL ANTI-ICE light switches on the P5-11 panel.

(b) Make sure that each light comes on then goes off.

SUBTASK 30-21-11-860-011

(7) Make sure that the engine and wing anti-ice panel commands the applicable cowl TAI valves open:

(a) For the left cowl TAI valve, put the ENG ANTI-ICE 1 switch in the ON position.

1) Make sure that the left COWL VALVE OPEN light comes on brightly for 1 to 6 seconds.

2) Make sure that the COWL VALVE OPEN light is on dimly after 6 seconds.

3) Make sure that the green TAI indication shows on the Common Display System (CDS) display, above the left N1 speed display.

(b) For the right cowl TAI valve, put the ENG ANTI-ICE 2 switch in the ON position.

1) Make sure that the right COWL VALVE OPEN light comes on brightly for 1 to 6 seconds.

2) Make sure that the COWL VALVE OPEN light is on dimly after 6 seconds.

3) Make sure that the green TAI indication shows on the CDS display, above the right N1 speed display.

ECCN 9E991 BOEING PROPRIETARY - See title page for details

SUBTASK 30-21-11-860-015

> **WARNING** DO NOT TOUCH THE COWL TAI DUCTS OR TAI VALVE WHEN THEY ARE HOT. IF YOU ARE NOT CAREFUL, INJURIES TO PERSONS CAN OCCUR.

(8) Make sure that there is no leakage around the engine cowl TAI ducts and TAI valve.

(a) To repair jet blast leakage, align the couplings.

SUBTASK 30-21-11-860-012

(9) Make sure that the engine and wing anti-ice panel commands the cowl TAI valves closed:

(a) For the left cowl TAI valve, put the ENG ANTI-ICE 1 switch in the OFF position.

1) Make sure that the left COWL VALVE OPEN light comes on brightly for 1 to 3 seconds.

2) Make sure that the COWL VALVE OPEN light goes off after 3 seconds.

(b) For the right cowl TAI valve, put the ENG ANTI-ICE 2 switch in the OFF position.

1) Make sure that the right COWL VALVE OPEN light comes on brightly for 1 to 3 seconds.

2) Make sure that the COWL VALVE OPEN light goes off after 3 seconds.

J. Put the Airplane Back to Its Usual Condition

SUBTASK 30-21-11-860-013

(1) If the engines are used to pressurize the TAI ducts, then stop the engines.

(a) Do this task: Stop the Engine Procedure (Usual Engine Stop), TASK 71-00-00-700-819-F00.

SUBTASK 30-21-11-860-014

(2) If the APU or external air is used to pressurize the TAI ducts, then, do this task: Remove Pressure from the Pneumatic System, TASK 36-00-00-860-806.

SUBTASK 30-21-11-860-007

(3) Do these steps to remove the DO NOT OPERATE tag, from the applicable ENGINE START switch and START LEVER switch:

(a) On the P5 overhead panel, remove the DO NOT OPERATE tag, from the applicable ENGINE START switch.

(b) On the P10 control stand, remove the DO NOT OPERATE tag, from the applicable START LEVER switch.

SUBTASK 30-21-11-020-008

(4) Remove the protective cover in the area of the engine cowl TAI valve.

SUBTASK 30-21-11-860-008

(5) For the right fan cowl panel, do this task: Close the Fan Cowl Panels, TASK 71-11-02-410-801-F00.

END OF TASK

ECCN 9E991 BOEING PROPRIETARY - See title page for details

ENGINE COWL TAI VALVE - CLEANING/PAINTING

1. General

A. This procedure has this task:

(1) A cleaning of the honest orifice on the engine cowl thermal anti-ice valve.

TASK 30-21-11-100-801

2. Honest Orifice - Cleaning

Figure 701

A. General

(1) This procedure provides the steps necessary to remove, clean, and install the honest orifice on those engine cowl TAI valves which have a removable honest orifice.

B. References

Reference	Title
36-00-00-860-806	Remove Pressure from the Pneumatic System (P/B 201)
71-11-02-010-801-F00	Open the Fan Cowl Panels (P/B 201)
71-11-02-410-801-F00	Close the Fan Cowl Panels (P/B 201)

C. Tools/Equipment

Reference	Description
STD-182	Cleaner - Ultrasonic
STD-6462	Bottle - Squeeze
STD-6638	Air Source - Compressed, Clean, Filtered, and Dry, 0 - 100 psi

D. Consumable Materials

Reference	Description	Specification
B50270	Cleaner - Medium Duty, Soak/Electrolytic, Immersion Cleaner	BAC5749 Method 3
D50179	Compound - Lubricating (Lockrey Liqui-Moly NV Thread Compound)	
G01659	Swab - Cotton Or Rayon, (Disposable)	
G50225	Lockwire - MS20995C20, Corrosion Resistant Steel - 0.020 Inch (0.508 mm) Diameter	NASM20995

E. Location Zones

Zone	Area
410	Subzone - Engine 1
420	Subzone - Engine 2

F. Prepare for the Cleaning

SUBTASK 30-21-11-870-001

(1) If not already done, do this task: Remove Pressure from the Pneumatic System, TASK 36-00-00-860-806.

SUBTASK 30-21-11-860-018

(2) For the right fan cowl panel, do this task: Open the Fan Cowl Panels, TASK 71-11-02-010-801-F00.

ECCN 9E991 BOEING PROPRIETARY - See title page for details

G. Honest Orifice Cleaning

SUBTASK 30-21-11-020-006

(1) Do the following to remove the honest orifice [4]:

(a) Remove the lockwire [1].

(b) Remove the screw [2] and washer [3].

(c) Remove the honest orifice [4].

SUBTASK 30-21-11-170-001

(2) Clean the orifice with one of the following methods:

(a) Method one uses compressed air.

1) Apply an air source, STD-6638, through the orifice from the threaded end and at each of the four vent holes.

2) If necessary, use a 0.032 in. (0.813 mm) lockwire to clean out the internal hole of the honest orifice.

(b) Method two uses ultrasonic cleaning:

1) Put the orifice in a solution of Turco C MXP, B50270, for 4 to 6 minutes.

2) Flush the orifice internally and externally with clean water at high pressure.

3) Put the removable orifice in a beaker with the open end of the orifice down and fill the beaker with the Turco C MXP, B50270.

4) Put the beaker in an ultrasonic cleaner, STD-182, and fill the tank with water until the water level is 0.375 in. (9.525 mm) from the top of the beaker.

5) Operate the ultrasonic cleaner for 5 minutes.

6) Remove the orifice from the beaker and discard the dirty cleaning solution.

7) Flush the orifice and beaker with the cleaning solution using a squeeze bottle, STD-6462.

8) Put the removable orifice back in the beaker with the open end of the orifice down and fill the beaker with the cleaning solution.

9) Operate the ultrasonic cleaner for another 5 minutes.

10) Repeat the process from step 6 until the cleaning solution is clear after a 5 minute period of operation in the ultrasonic cleaner.

SUBTASK 30-21-11-100-001

(3) Use a swab, G01659 to carefully clean and wipe up dirt from the following:

NOTE: Be careful not to allow dirt to drop down into the hole.

(a) Valve Housing.

(b) Honest Orifice threads.

SUBTASK 30-21-11-420-003

CAUTION

OBEY THESE INSTRUCTIONS. IF YOU INSTALL THE HONEST ORIFICE INCORRECTLY, HOT AIR LEAKS WILL CAUSE DAMAGE TO EQUIPMENT.

(4) Use thread lubricating compound for the assembly of all threaded parts as follows:

ECCN 9E991 BOEING PROPRIETARY - See title page for details

CAUTION

USE OF TOO MUCH THREAD LUBRICATING COMPOUND CAN CAUSE CLOGGED VENTS AND ORIFICES.

(a) Apply a small quantity of Liqui-Moly NV Thread Compound, D50179 to the threads of all male threaded parts.

(5) Install the honest orifice [4].

(a) Tighten the orifice 17 in-lb (2 N·m) to 20 in-lb (2 N·m).

(b) Make sure that there is a minimum of 0.015 in. (0.381 mm) gap around the honest orifice head for sufficient airflow.

(6) Install the washer [3] and screw [2].

(a) Tighten the screw 6 in-lb (1 N·m) to 8 in-lb (1 N·m).

(7) Remove all of the thread lubricating compound that is remaining after assembly of the threaded parts.

(8) Using MS20995C20 lockwire, G50225, lockwire both the screw and the orifice as one to the housing.

H. Put the Airplane Back to Its Usual Condition

SUBTASK 30-21-11-860-020

(1) For the right fan cowl panel, do this task: Close the Fan Cowl Panels, TASK 71-11-02-410-801-F00

END OF TASK

ECCN 9E991 BOEING PROPRIETARY - See title page for details

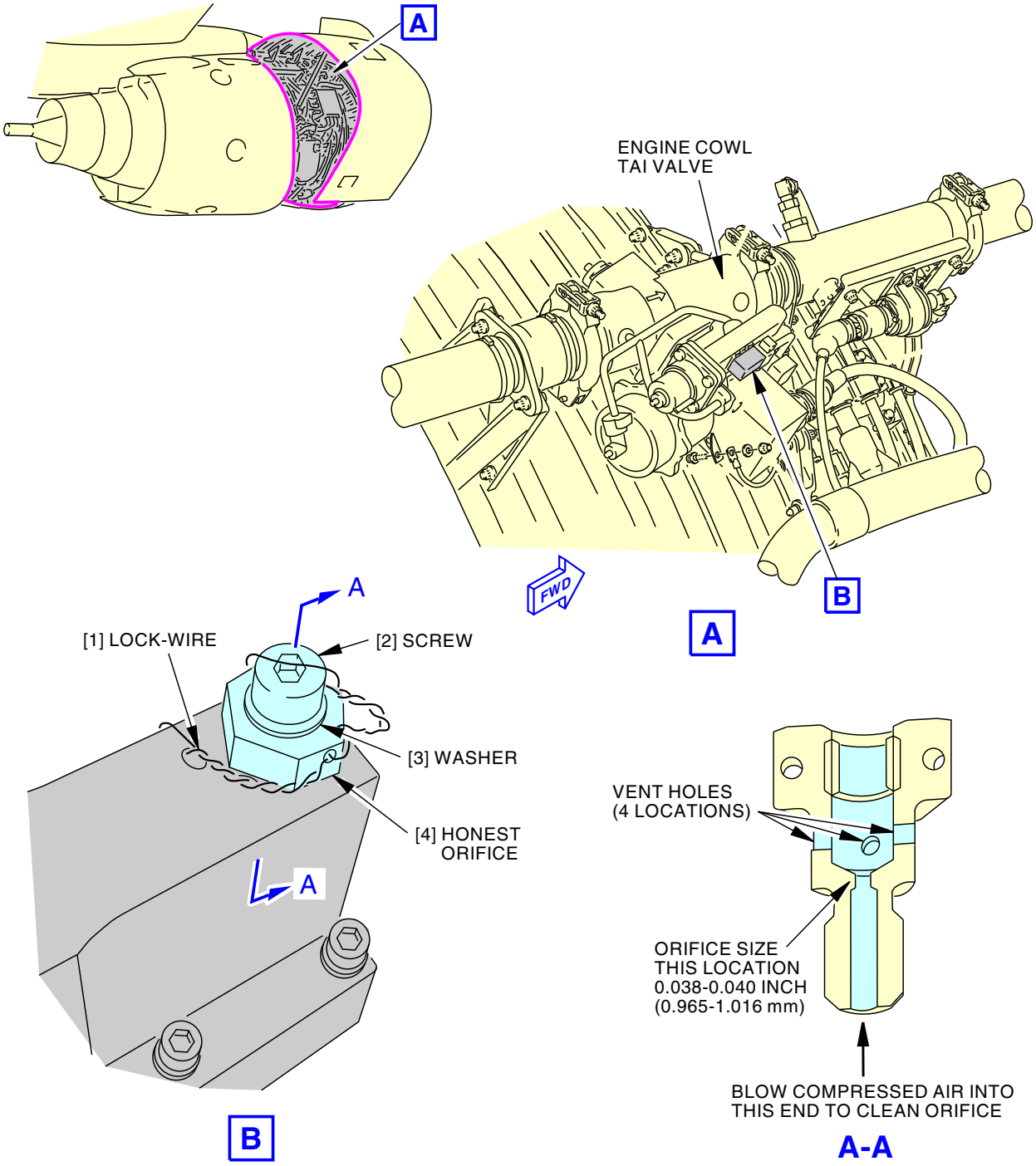

Honest Orifice Cleaning
Figure 701/30-21-11-990-803

ECCN 9E991 BOEING PROPRIETARY - See title page for details

ENGINE ANTI-ICE PRESSURE SENSOR - REMOVAL/INSTALLATION

1. General

A. This procedure has these tasks:

(1) Engine Anti-Ice Pressure Sensor Removal

(2) Engine Anti-Ice Pressure Sensor Installation.

TASK 30-21-21-000-802

2. Engine Anti-Ice Pressure Sensor Removal

(Figure 401)

A. General

(1) This task gives instructions to remove the Engine Anti-Ice Pressure Sensor.

B. References

Reference	Title
36-00-00-860-806	Remove Pressure from the Pneumatic System (P/B 201)
71-11-02-010-801-F00	Open the Fan Cowl Panels (P/B 201)

C. Location Zones

Zone	Area
411	Engine 1 - Engine
421	Engine 2 - Engine

D. Prepare for the Removal

SUBTASK 30-21-21-860-004

(1) Open these circuit breakers and install safety tags:

CAPT Electrical System Panel, P18-3

Row	Col	Number	Name
A	6	C00148	ANTI-ICE & RAIN ENG 1 & WING CONT
A	7	C01001	ANTI-ICE & RAIN ENG 1 COWL AI VALVE
B	6	C00149	ANTI-ICE & RAIN ENGINE 2 CONTROL
B	7	C01002	ANTI-ICE & RAIN ENG 2 COWL AI VALVE

SUBTASK 30-21-21-010-009

(2) If not already done, do this task: Remove Pressure from the Pneumatic System, TASK 36-00-00-860-806.

SUBTASK 30-21-21-010-005

(3) For the right fan cowl panel, do this task: Open the Fan Cowl Panels, TASK 71-11-02-010-801-F00.

E. Engine Anti-Ice Pressure Sensor Removal

SUBTASK 30-21-21-020-001

(1) Disconnect the electrical connector [5] from the TAI pressure switch [4].

ECCN 9E991 BOEING PROPRIETARY - See title page for details

SUBTASK 30-21-21-020-002

CAUTION	HOLD THE FITTING ON THE PRESSURE SWITCH IN ITS PLACE WITH A SECOND WRENCH WHEN YOU CONNECT THE TUBE. IF YOU DO NOT HOLD THE FITTING IN ITS PLACE, DAMAGE CAN OCCUR TO THE TAI PRESSURE SWITCH.

(2) Remove the pneumatic fitting [1] from the TAI pressure switch [4].

SUBTASK 30-21-21-020-003

(3) Loosen the bolts [2] to loosen the clamp [3].

SUBTASK 30-21-21-020-004

(4) Remove the clamp [3], TAI pressure switch [4] and saddle clamp [6].

——— END OF TASK ———

ECCN 9E991 BOEING PROPRIETARY - See title page for details

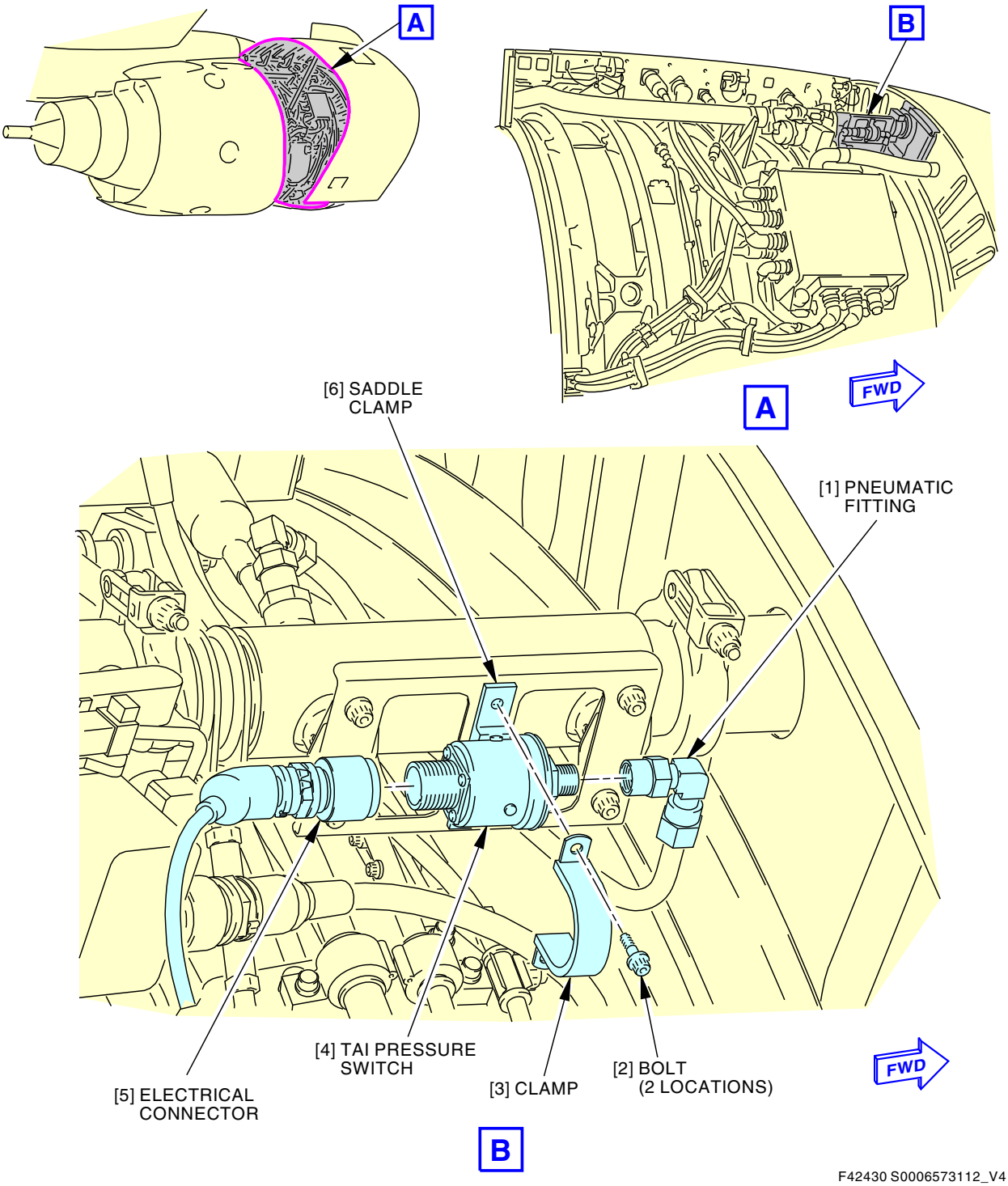

Engine Anti-ice Pressure Switch Installation
Figure 401/30-21-21-990-802

ECCN 9E991 BOEING PROPRIETARY - See title page for details

TASK 30-21-21-400-801

3. Engine Anti-Ice Pressure Sensor Installation

(Figure 401)

A. General

(1) This task gives instructions to install the Engine Anti-Ice Pressure Sensor.

B. References

Reference	Title
36-00-00-860-806	Remove Pressure from the Pneumatic System (P/B 201)
71-11-02-010-801-F00	Open the Fan Cowl Panels (P/B 201)
71-11-02-410-801-F00	Close the Fan Cowl Panels (P/B 201)

C. Expendables/Parts

AMM Item	Description	AIPC Reference	AIPC Effectivity
3	Clamp	30-21-21-01A-010	LOM ALL
4	TAI pressure switch	30-21-21-01A-020	LOM ALL
6	Saddle clamp	30-21-21-01A-015	LOM ALL

D. Location Zones

Zone	Area
411	Engine 1 - Engine
421	Engine 2 - Engine

E. Prepare for the Installation

SUBTASK 30-21-21-860-005

(1) Make sure that these circuit breakers are open and have safety tags:

CAPT Electrical System Panel, P18-3

Row	Col	Number	Name
A	6	C00148	ANTI-ICE & RAIN ENG 1 & WING CONT
A	7	C01001	ANTI-ICE & RAIN ENG 1 COWL AI VALVE
B	6	C00149	ANTI-ICE & RAIN ENGINE 2 CONTROL
B	7	C01002	ANTI-ICE & RAIN ENG 2 COWL AI VALVE

SUBTASK 30-21-21-010-008

(2) If not already done, do this task: Remove Pressure from the Pneumatic System, TASK 36-00-00-860-806.

SUBTASK 30-21-21-010-007

(3) If not already done, do this task: Open the Fan Cowl Panels, TASK 71-11-02-010-801-F00.

F. Engine Anti-Ice Pressure Sensor Installation

SUBTASK 30-21-21-420-002

(1) Loosely install the TAI pressure switch [4] in the saddle clamp [6] with the clamp [3] and bolts [2].

NOTE: Do not tighten the bolts [2] at this time.

SUBTASK 30-21-21-820-001

(2) Position the TAI pressure switch [4] such that the electrical connector [5] master keyway is furthest away from the duct.

ECCN 9E991 BOEING PROPRIETARY - See title page for details

SUBTASK 30-21-21-420-003

(3) Connect the electrical connector [5] to the TAI pressure switch [4].

SUBTASK 30-21-21-420-005

> **CAUTION** HOLD THE FITTING ON THE PRESSURE SWITCH IN ITS PLACE WITH A SECOND WRENCH WHEN YOU CONNECT THE TUBE. IF YOU DO NOT HOLD THE FITTING IN ITS PLACE, DAMAGE CAN OCCUR TO THE TAI PRESSURE SWITCH.

(4) Connect the elbow to the TAI pressure switch [4].

SUBTASK 30-21-21-420-006

> **CAUTION** WHEN YOU TIGHTEN THE TUBE ASSEMBLY, HOLD THE FITTING ON THE PRESSURE SWITCH IN ITS PLACE WITH A SECOND WRENCH. IF YOU DO NOT HOLD THE FITTING IN ITS PLACE, DAMAGE CAN OCCUR TO THE TAI PRESSURE SWITCH.

(5) Tighten the elbow to 256.5 in-lb (29.0 N·m) to 283.5 in-lb (32.0 N·m).

SUBTASK 30-21-21-420-008

(6) Tighten the bolts [2] on the clamp [3] to 50.0 in-lb (5.6 N·m) to 56.0 in-lb (6.3 N·m).

SUBTASK 30-21-21-860-003

(7) Remove the safety tags and close these circuit breakers:

CAPT Electrical System Panel, P18-3

Row	Col	Number	Name
A	6	C00148	ANTI-ICE & RAIN ENG 1 & WING CONT
A	7	C01001	ANTI-ICE & RAIN ENG 1 COWL AI VALVE
B	6	C00149	ANTI-ICE & RAIN ENGINE 2 CONTROL
B	7	C01002	ANTI-ICE & RAIN ENG 2 COWL AI VALVE

G. Left Anti-Ice Overpressure Pressure Sensor Installation Test

SUBTASK 30-21-21-710-003

(1) Do this test of the left cowl TAI duct overpressure detection circuit:

(a) Disconnect the electrical connector from the left engine duct overpressure switch.

(b) Connect a jumper wire between pins 1 and 2 of the connector.

1) Make sure that the left COWL ANTI-ICE light comes on.

(c) Remove the jumper wire from the connector.

(d) Re-connect the connector to the overpressure switch.

(e) Make sure that the left COWL ANTI-ICE light is off.

H. Right Anti-Ice Overpressure Pressure Sensor Installation Test

SUBTASK 30-21-21-710-004

(1) Do this test of the right cowl TAI duct overpressure detection circuit:

(a) Disconnect the electrical connector from the right engine duct overpressure switch.

(b) Connect a jumper wire between pins 1 and 2 of the connector.

1) Make sure that the right COWL ANTI-ICE light comes on.

(c) Remove the jumper wire from the connector.

(d) Connect the connector to the overpressure switch.

ECCN 9E991 BOEING PROPRIETARY - See title page for details

(e) Make sure that the right COWL ANTI-ICE light is off.

I. Put the Airplane back to its Usual Condition

SUBTASK 30-21-21-410-001

(1) For the right fan cowl panel, do this task: Close the Fan Cowl Panels, TASK 71-11-02-410-801-F00.

——— END OF TASK ———

ECCN 9E991 BOEING PROPRIETARY - See title page for details

AIR DATA SENSOR ANTI-ICING - MAINTENANCE PRACTICES

1. General

A. This procedure has these tasks:

(1) Replacement of the pitot probe, angle of attack (AOA) sensor, and total air temperature (TAT) probe.

NOTE: The angle of attack (AOA) sensors are also referred to as alpha vanes.

(a) The pitot probe, AOA sensor, and TAT probe heaters are built into the respective air data sensor.

(b) If a heater fails, then the sensor must be replaced.

(2) AOA Vane, Pitot, Elevator Pitot, Temperature Probes Deactivation.

(3) AOA Vane, Pitot, Elevator Pitot, Temperature Probes Activation.

TASK 30-31-00-900-801

2. Pitot Probe, AOA Sensor, and TAT Probe Heater Replacement

A. References

Reference	Title
27-31-94-000-801	Feel System Pitot Probe Removal (P/B 401)
27-31-94-400-801	Feel System Pitot Probe Installation (P/B 401)
34-11-01-000-801	Pitot Probe - Removal (P/B 401)
34-11-01-400-801	Pitot Probe - Installation (P/B 401)
34-21-05-000-801	Angle of Attack Sensor Removal (P/B 401)
34-21-05-400-801	Angle of Attack Sensor Installation (P/B 401)
34-21-06-000-801	Total Air Temperature Probe - Removal (P/B 401)
34-21-06-400-801	Total Air Temperature Probe - Installation (P/B 401)

B. Location Zones

Zone	Area
113	Area Above and Outboard of Nose Landing Gear Wheel Well - Left
114	Area Above and Outboard of Nose Landing Gear Wheel Well - Right
323	Vertical Fin - Front Spar To Rear Spar

C. Procedure

SUBTASK 30-31-00-900-001

(1) If a pitot probe heater is defective, then you must replace the pitot probe. These are the tasks:

(a) Pitot Probe - Removal, TASK 34-11-01-000-801.

(b) Pitot Probe - Installation, TASK 34-11-01-400-801.

SUBTASK 30-31-00-900-004

(2) If a feel system pitot probe heater is defective, then you must replace the feel system pitot probe. These are the tasks:

(a) Feel System Pitot Probe Removal, TASK 27-31-94-000-801.

(b) Feel System Pitot Probe Installation, TASK 27-31-94-400-801.

SUBTASK 30-31-00-900-002

(3) If an AOA sensor heater is defective, then you must replace the AOA sensor. These are the tasks:

ECCN 9E991 BOEING PROPRIETARY - See title page for details

(a) Angle of Attack Sensor Removal, TASK 34-21-05-000-801.

(b) Angle of Attack Sensor Installation, TASK 34-21-05-400-801.

SUBTASK 30-31-00-900-003

(4) If a TAT probe heater is defective, then you must replace the TAT probe. These are the tasks:

(a) Total Air Temperature Probe - Removal, TASK 34-21-06-000-801.

(b) Total Air Temperature Probe - Installation, TASK 34-21-06-400-801.

——— END OF TASK ———

TASK 30-31-00-040-801

3. AOA Vane, Pitot, Elevator Pitot, Temperature Probes - Deactivation

(Figure 30-31-00-990-801)

A. General

(1) This procedure removes electrical power to the Angle of Attack (AOA) Vane, Pitot, Elevator Pitot, and Temperature Probe systems.

B. References

Reference	Title
30-31-00-990-801	Figure: Window/Pitot Heat Module (P/B 501)

C. Location Zones

Zone	Area
113	Area Above and Outboard of Nose Landing Gear Wheel Well - Left
114	Area Above and Outboard of Nose Landing Gear Wheel Well - Right
211	Flight Compartment - Left
212	Flight Compartment - Right
323	Vertical Fin - Front Spar To Rear Spar
324	Vertical Fin - Rear Spar To Trailing Edge

D. Procedure

SUBTASK 30-31-00-860-017

WARNING

DO NOT TOUCH THE AIR DATA SENSORS. THE SENSORS CAN GET VERY HOT. THE SENSORS CAN BURN YOU.

CAUTION

REMOVE ALL CAPS AND COVERS FROM ALL AIR DATA SENSORS. THE SENSORS BECOME HOT. THIS CAN CAUSE DAMAGE TO THE COVERS.

(1) Open these circuit breakers and install safety tags:

CAPT Electrical System Panel, P18-3

Row	Col	Number	Name
C	1	C00523	HEATERS CAPT PITOT
C	2	C00238	HEATERS TEMP PROBE
C	3	C01072	HEATERS ALPHA VANE LEFT
C	4	C00236	HEATERS ELEV PITOT LEFT

ECCN 9E991 BOEING PROPRIETARY - See title page for details

(Continued)

CAPT Electrical System Panel, P18-3

Row	Col	Number	Name
LOM 402, 404, 406, 407, 411, 412, 415, 416, 420, 422-434, 437-447, 450-464			
D	1	C00226	WINDOW HEAT CONTROL RIGHT FRONT AC
D	2	C00225	WINDOW HEAT CONTROL LEFT SIDE AC
LOM ALL			
D	3	C01071	HEATERS ALPHA VANE RIGHT
D	4	C00237	HEATERS ELEV PITOT RIGHT
D	5	C00525	HEATERS F/O PITOT
D	6	C00524	HEATERS AUX PITOT
LOM 402, 404, 406, 407, 411, 412, 415, 416, 420, 422-434, 437-447, 450-464			
E	1	C00224	WINDOW HEAT CONTROL LEFT FRONT AC
E	2	C00227	WINDOW HEAT CONTROL RIGHT SIDE AC

LOM ALL

E. AOA Vane, Pitot, Elevator Pitot, Temperature Probes -Tryout

NOTE: This tryout is to make sure the AOA Vane, Pitot, Elevator Pitot, Temperature Probes is in a zero energy state.

SUBTASK 30-31-00-210-001

(1) At the P5-9 Window/Pitot Heat Module do the following steps:

(a) Set the PROBE HEAT A switch to the ON position.

1) Make sure that the CAPT PITOT, L ELEV PITOT, L ALPHA VANE, and TEMP PROBE lights on the Window and Pitot Heat Module remain ON.

LOM 404, 407, 420 PRE SB 737-30A1063

(b) Set the PROBE HEAT A switch to the OFF position.

LOM 402, 406, 411, 412, 415, 416, 422-434, 437-447, 450-999; LOM 404, 407, 420 POST SB 737-30A1063

(c) Set the PROBE HEAT A switch to the AUTO position.

LOM ALL

(d) Set the PROBE HEAT B switch to the ON position.

1) Make sure that the F/O PITOT, R ELEV PITOT, R ALPHA VANE, and AUX PITOT lights on the Window and Pitot Heat Module remain ON.

LOM 404, 407, 420 PRE SB 737-30A1063

(e) Set the PROBE HEAT B switch to the OFF position.

LOM 402, 406, 411, 412, 415, 416, 422-434, 437-447, 450-999; LOM 404, 407, 420 POST SB 737-30A1063

(f) Set the PROBE HEAT B switch to the AUTO position.

LOM ALL

(g) Set the four WINDOW HEAT switches to the ON position one at a time.

1) Make sure that the corresponding ON light on the Window and Pitot Heat Module remains OFF.

2) Make sure that the corresponding OVERHEAT light turns ON.

ECCN 9E991 BOEING PROPRIETARY - See title page for details

(h) Set all four WINDOW HEAT switches on the Window and Pitot Heat Module to the OFF position.

——— END OF TASK ———

TASK 30-31-00-440-801

4. AOA Vane, Pitot, Elevator Pitot, Temperature Probes - Activation

(Figure 30-31-00-990-801)

A. General

(1) This procedure adds electrical power to the AOA Vane, Pitot, Elevator Pitot, Temperature Probe systems.

B. References

Reference	Title
30-31-00-990-801	Figure: Window/Pitot Heat Module (P/B 501)

C. Location Zones

Zone	Area
113	Area Above and Outboard of Nose Landing Gear Wheel Well - Left
114	Area Above and Outboard of Nose Landing Gear Wheel Well - Right
211	Flight Compartment - Left
212	Flight Compartment - Right
323	Vertical Fin - Front Spar To Rear Spar
324	Vertical Fin - Rear Spar To Trailing Edge

D. Procedure

SUBTASK 30-31-00-860-018

WARNING

DO NOT TOUCH THE AIR DATA SENSORS. THE SENSORS CAN GET VERY HOT. THE SENSORS CAN BURN YOU.

CAUTION

REMOVE ALL CAPS AND COVERS FROM ALL AIR DATA SENSORS. THE SENSORS BECOME HOT. THIS CAN CAUSE DAMAGE TO THE COVERS.

(1) Remove the safety tags and close these circuit breakers:

CAPT Electrical System Panel, P18-3

Row	Col	Number	Name
C	1	C00523	HEATERS CAPT PITOT
C	2	C00238	HEATERS TEMP PROBE
C	3	C01072	HEATERS ALPHA VANE LEFT
C	4	C00236	HEATERS ELEV PITOT LEFT
LOM 402, 404, 406, 407, 411, 412, 415, 416, 420, 422-434, 437-447, 450-464			
D	1	C00226	WINDOW HEAT CONTROL RIGHT FRONT AC
D	2	C00225	WINDOW HEAT CONTROL LEFT SIDE AC
LOM ALL			
D	3	C01071	HEATERS ALPHA VANE RIGHT
D	4	C00237	HEATERS ELEV PITOT RIGHT

ECCN 9E991 BOEING PROPRIETARY - See title page for details

(Continued)

CAPT Electrical System Panel, P18-3

Row	Col	Number	Name
D	5	C00525	HEATERS F/O PITOT
D	6	C00524	HEATERS AUX PITOT

LOM 402, 404, 406, 407, 411, 412, 415, 416, 420, 422-434, 437-447, 450-464

E	1	C00224	WINDOW HEAT CONTROL LEFT FRONT AC
E	2	C00227	WINDOW HEAT CONTROL RIGHT SIDE AC

END OF TASK

ECCN 9E991 BOEING PROPRIETARY - See title page for details

AIR DATA SENSOR ANTI-ICING - ADJUSTMENT/TEST

1. General

LOM 402, 406, 411, 412, 415, 416, 422-434, 437-447, 450-999; LOM 404, 407, 420 POST SB 737-30A1063

A. This procedure contains scheduled maintenance task data.

B. This procedure consists of two tasks:

(1) A task to test the AUTO Air Data Sensor heating feature.

(2) A task to do a test of the pitot probe, angle of attack (AOA) sensor, and TAT probe heaters.

NOTE: The AOA sensors are also referred to as alpha vanes.

LOM 404, 407, 420 PRE SB 737-30A1063

C. This procedure consists of one task:

(1) A task to do a test of the pitot probe, angle of attack (AOA) sensor, and TAT probe heaters.

NOTE: The AOA sensors are also referred to as alpha vanes.

LOM 402, 406, 411, 412, 415, 416, 422-434, 437-447, 450-999; LOM 404, 407, 420 POST SB 737-30A1063

TASK 30-31-00-750-801

2. AUTO Air Data Sensor Heating - Operational Test

(Figure 501)

NOTE: This procedure is a scheduled maintenance task.

A. References

Reference	Title
31-62-21-000-801	Display Electronic Unit Removal (P/B 401)
31-62-21-400-801	Display Electronic Unit Installation (P/B 401)
71-00-00-700-819-F00	Stop the Engine Procedure (Usual Engine Stop) (P/B 201)
71-00-00-800-807-F00	Start the Engine Procedure (Selection) (P/B 201)

B. Tools/Equipment

NOTE: When more than one tool part number is listed under the same "Reference" number, the tools shown are alternates to each other within the same airplane series. Tool part numbers that are replaced or non-procurable are preceded by "Opt:", which stands for Optional.

Reference	Description
SPL-1930	Box - Breakout, ARINC 600 Part #: A34016-XX Supplier: 81205

C. Location Zones

Zone	Area
113	Area Above and Outboard of Nose Landing Gear Wheel Well - Left
114	Area Above and Outboard of Nose Landing Gear Wheel Well - Right

D. Prepare for the Operational Test

SUBTASK 30-31-00-860-015

(1) Make sure that the PROBE HEAT A and B switches are set to the AUTO position.

ECCN 9E991 BOEING PROPRIETARY - See title page for details

LOM 402, 406, 411, 412, 415, 416, 422-434, 437-447, 450-999; LOM 404, 407, 420 POST SB 737-30A1063 (Continued)

SUBTASK 30-31-00-010-001

> **CAUTION** REMOVE PROTECTIVE CAPS AND COVERS FROM ALL AIR DATA SENSORS. DAMAGE TO THE AIR DATA SENSORS CAN OCCUR WITH PROTECTIVE CAPS AND COVERS INSTALLED.

(2) Make sure that there are no protective covers on the air data sensors.

E. AUTO Air Data Sensor Heating Operational Test

LOM 416, 443, 444; LOM 404 POST SB 737-30A1063

SUBTASK 30-31-00-750-001

> **WARNING** KEEP PERSONNEL, AND EQUIPMENT AWAY FROM THE PITOT PROBES, TOTAL AIR TEMPERATURE PROBE, AND ANGLE-OF-ATTACK VANE. THESE COMPONENTS WILL BECOME VERY HOT. THEY CAN CAUSE INJURIES TO PERSONNEL, AND DAMAGE TO EQUIPMENT.

(1) Do this check of the following lights on the window and pitot heat module:

(a) Make sure that the CAPT PITOT, L ELEV PITOT, L ALPHA VANE, TEMP PROBE, F/O PITOT, R ELEV PITOT, R ALPHA VANE, and AUX PITOT lights on the window and pitot heat module are on.

(b) Press and hold the TAT TEST switch.

(c) Make sure that the TEMP PROBE light on the window and pitot heat module goes off.

(d) Release the TAT TEST switch.

NOTE: The TEMP PROBE light goes on when the TAT TEST switch is released.

(2) Test the AUTO position of the PROBE HEAT A and B switches.

NOTE: Only one engine should be operating while performing this test of the AUTO position of the PROBE HEAT switches. This is done to test the full health of the system.

(a) Do this task for engine 1: Start the Engine Procedure (Selection), TASK 71-00-00-800-807-F00.

(b) With the engine running, check the following lights on the window and pitot heat module:

1) Make sure that the CAPT PITOT, L ELEV PITOT, L ALPHA VANE, TEMP PROBE, F/O PITOT, R ELEV PITOT, R ALPHA VANE, and AUX PITOT lights on the window and pitot heat module go off.

2) Press and hold the TAT TEST switch.

3) Make sure that the TEMP PROBE light on the window and pitot heat module stays off.

4) Release the TAT TEST switch.

(c) Do this task for engine 1: Stop the Engine Procedure (Usual Engine Stop), TASK 71-00-00-700-819-F00.

1) Make sure that the CAPT PITOT, L ELEV PITOT, L ALPHA VANE, TEMP PROBE, F/O PITOT, R ELEV PITOT, R ALPHA VANE, and AUX PITOT lights on the window and pitot heat module go on.

2) Press and hold the TAT TEST switch.

ECCN 9E991 BOEING PROPRIETARY - See title page for details

3) Make sure that the TEMP PROBE light on the window and pitot heat module goes off.

4) Release the TAT TEST switch.

NOTE: The TEMP PROBE light goes on when the TAT TEST switch is released.

(d) Do this task for engine 2: Start the Engine Procedure (Selection), TASK 71-00-00-800-807-F00.

(e) With the engine running, check the following lights on the window and pitot heat module:

1) Make sure that the CAPT PITOT, L ELEV PITOT, L ALPHA VANE, TEMP PROBE, F/O PITOT, R ELEV PITOT, R ALPHA VANE, and AUX PITOT lights on the window and pitot heat module go off.

2) Press and hold the TAT TEST switch.

3) Make sure that the TEMP PROBE light on the window and pitot heat module stays off.

4) Release the TAT TEST switch.

(f) Do this task for engine 2: Stop the Engine Procedure (Usual Engine Stop), TASK 71-00-00-700-819-F00.

1) Make sure that the CAPT PITOT, L ELEV PITOT, L ALPHA VANE, TEMP PROBE, F/O PITOT, R ELEV PITOT, R ALPHA VANE, and AUX PITOT lights on the window and pitot heat module go on.

2) Press and hold the TAT TEST switch.

3) Make sure that the TEMP PROBE light on the window and pitot heat module goes off.

4) Release the TAT TEST switch.

NOTE: The TEMP PROBE light goes on when the TAT TEST switch is released.

LOM 402, 406, 411, 412, 415, 422-434, 437-442, 445-447, 450-999; LOM 407, 420 POST SB 737-30A1063

SUBTASK 30-31-00-750-003

WARNING KEEP PERSONNEL, AND EQUIPMENT AWAY FROM THE PITOT PROBES, TOTAL AIR TEMPERATURE PROBE, AND ANGLE-OF-ATTACK VANE. THESE COMPONENTS WILL BECOME VERY HOT. THEY CAN CAUSE INJURIES TO PERSONNEL, AND DAMAGE TO EQUIPMENT.

(3) Do this check of the following lights on the window and pitot heat module:

(a) Make sure the CAPT PITOT, L ELEV PITOT, L ALPHA VANE, TEMP PROBE, F/O PITOT, R ELEV PITOT, R ALPHA VANE, and AUX PITOT lights on the window and pitot heat module go on.

(4) Test the AUTO position of the PROBE HEAT A and B switches.

NOTE: Only one engine should be operating while performing this test of the AUTO position of the PROBE HEAT switches. This is done to test the full health of the system.

(a) Do this task for engine 1: Start the Engine Procedure (Selection), TASK 71-00-00-800-807-F00.

(b) With the engine running, check the following lights on the window and pitot heat module:

ECCN 9E991 BOEING PROPRIETARY - See title page for details

1) Make sure the CAPT PITOT, L ELEV PITOT, L ALPHA VANE, TEMP PROBE, F/O PITOT, R ELEV PITOT, R ALPHA VANE, and AUX PITOT lights on the window and pitot heat module go off.

(c) Do this task for engine 1: Stop the Engine Procedure (Usual Engine Stop), TASK 71-00-00-700-819-F00.

1) Make sure the CAPT PITOT, L ELEV PITOT, L ALPHA VANE, TEMP PROBE, F/O PITOT, R ELEV PITOT, R ALPHA VANE, and AUX PITOT lights on the window and pitot heat module go on.

(d) Do this task for engine 2: Start the Engine Procedure (Selection), TASK 71-00-00-800-807-F00.

(e) With the engine running, check the following lights on the window and pitot heat module:

1) Make sure the CAPT PITOT, L ELEV PITOT, L ALPHA VANE, TEMP PROBE, F/O PITOT, R ELEV PITOT, R ALPHA VANE, and AUX PITOT lights on the window and pitot heat module go off.

(f) Do this task for engine 2: Stop the Engine Procedure (Usual Engine Stop), TASK 71-00-00-700-819-F00.

1) Make sure the CAPT PITOT, L ELEV PITOT, L ALPHA VANE, TEMP PROBE, F/O PITOT, R ELEV PITOT, R ALPHA VANE, and AUX PITOT lights on the window and pitot heat module go on.

LOM 402, 406, 411, 412, 415, 416, 422-434, 437-447, 450-999; LOM 404, 407, 420 POST SB 737-30A1063

F. AUTO Air Data Sensor Heating Operational Test - Alternative Procedure

NOTE: The alternative method does not require engines running.

LOM 416, 443, 444; LOM 404 POST SB 737-30A1063

SUBTASK 30-31-00-750-002

WARNING	KEEP PERSONNEL, AND EQUIPMENT AWAY FROM THE PITOT PROBES, TOTAL AIR TEMPERATURE PROBE, AND ANGLE-OF-ATTACK VANE. THESE COMPONENTS WILL BECOME VERY HOT. THEY CAN CAUSE INJURIES TO PERSONNEL, AND DAMAGE TO EQUIPMENT.

(1) Make sure that the PROBE HEAT A and B switches are set to the AUTO position.

(2) Do this check of the following lights on the window and pitot heat module:

(a) Make sure that the CAPT PITOT, L ELEV PITOT, L ALPHA VANE, TEMP PROBE, F/O PITOT, R ELEV PITOT, R ALPHA VANE, and AUX PITOT lights on the window and pitot heat module are on.

(b) Press and hold the TAT TEST switch.

(c) Make sure that the TEMP PROBE light on the window and pitot heat module goes off.

(d) Release the TAT TEST switch.

NOTE: NOTE: The TEMP PROBE light goes on when the TAT TEST switch is released.

(3) Test the AUTO position of the PROBE HEAT A and B switches.

(a) Do this task for DEU 1, M1808: Display Electronic Unit Removal, TASK 31-62-21-000-801.

ECCN 9E991 BOEING PROPRIETARY - See title page for details

LOM 416, 443, 444; LOM 404 POST SB 737-30A1063 (Continued)

(b) Install an ARINC 600 breakout box, SPL-1930, in place of DEU 1.

NOTE: It is possible to perform this subtask without ARINC 600 breakout box, SPL-1930, although use of it minimizes risk of damage to the pins.

(c) Apply a ground to pin F12 of connector D3973B.

(d) Check the following lights on the window and pitot heat module:

1) Make sure that the CAPT PITOT, L ELEV PITOT, L ALPHA VANE, TEMP PROBE, F/O PITOT, R ELEV PITOT, R ALPHA VANE, and AUX PITOT lights on the window and pitot heat module go off.

2) Press and hold the TAT TEST switch.

3) Make sure that the TEMP PROBE light on the window and pitot heat module stays off.

4) Release the TAT TEST switch.

(e) Remove the ground from pin F12 of connector D3973B.

1) Make sure that the CAPT PITOT, L ELEV PITOT, L ALPHA VANE, TEMP PROBE, F/O PITOT, R ELEV PITOT, R ALPHA VANE, and AUX PITOT lights on the window and pitot heat module go on.

2) Press and hold the TAT TEST switch.

3) Make sure that the TEMP PROBE light on the window and pitot heat module goes off.

4) Release the TAT TEST switch.

NOTE: The TEMP PROBE light goes on when the TAT TEST switch is released.

(f) Apply a ground to pin F12 of connector D3973E.

(g) Check the following lights on the window and pitot heat module:

1) Make sure that the CAPT PITOT, L ELEV PITOT, L ALPHA VANE, TEMP PROBE, F/O PITOT, R ELEV PITOT, R ALPHA VANE, and AUX PITOT lights on the window and pitot heat module go off.

2) Press and hold the TAT TEST switch.

3) Make sure that the TEMP PROBE light on the window and pitot heat module stays off.

4) Release the TAT TEST switch.

(h) Remove the ground from pin F12 of connector D3973E.

1) Make sure that the CAPT PITOT, L ELEV PITOT, L ALPHA VANE, TEMP PROBE, F/O PITOT, R ELEV PITOT, R ALPHA VANE, and AUX PITOT lights on the window and pitot heat module go on.

2) Press and hold the TAT TEST switch.

3) Make sure that the TEMP PROBE light on the window and pitot heat module goes off.

4) Release the TAT TEST switch.

NOTE: The TEMP PROBE light goes on when the TAT TEST switch is released.

(i) Remove the breakout box.

ECCN 9E991 BOEING PROPRIETARY - See title page for details

LOM 416, 443, 444; LOM 404 POST SB 737-30A1063 (Continued)

(j) Do this task for DEU 1, M1808: Display Electronic Unit Installation, TASK 31-62-21-400-801.

LOM 402, 406, 411, 412, 415, 422-434, 437-442, 445-447, 450-999; LOM 407, 420 POST SB 737-30A1063

SUBTASK 30-31-00-750-004

WARNING	KEEP PERSONNEL, AND EQUIPMENT AWAY FROM THE PITOT PROBES, TOTAL AIR TEMPERATURE PROBE, AND ANGLE-OF-ATTACK VANE. THESE COMPONENTS WILL BECOME VERY HOT. THEY CAN CAUSE INJURIES TO PERSONNEL, AND DAMAGE TO EQUIPMENT.

(4) Make sure the PROBE HEAT A and B switches are set to the AUTO position.

(5) Do this check of the following lights on the window and pitot heat module:

(a) Make sure the CAPT PITOT, L ELEV PITOT, L ALPHA VANE, TEMP PROBE, F/O PITOT, R ELEV PITOT, R ALPHA VANE, and AUX PITOT lights on the window and pitot heat module go on.

(6) Test the AUTO position of the PROBE HEAT A and B switches.

(a) Do this task for DEU 1, M1808: Display Electronic Unit Removal, TASK 31-62-21-000-801.

(b) Install an ARINC 600 breakout box, SPL-1930 in place of DEU 1.

NOTE: It is possible to perform this subtask without ARINC 600 breakout box, SPL-1930, although use of it minimizes risk of damage to the pins.

(c) Apply a ground to pin F12 of connector D3973B.

(d) Check the following lights on the window and pitot heat module:

1) Make sure the CAPT PITOT, L ELEV PITOT, L ALPHA VANE, TEMP PROBE, F/O PITOT, R ELEV PITOT, R ALPHA VANE, and AUX PITOT lights on the window and pitot heat module go off.

(e) Remove the ground from pin F12 of connector D3973B.

1) Make sure the CAPT PITOT, L ELEV PITOT, L ALPHA VANE, TEMP PROBE, F/O PITOT, R ELEV PITOT, R ALPHA VANE, and AUX PITOT lights on the window and pitot heat module go on.

(f) Apply a ground to pin F12 of connector D3973E.

(g) Check the following lights on the window and pitot heat module:

1) Make sure the CAPT PITOT, L ELEV PITOT, L ALPHA VANE, TEMP PROBE, F/O PITOT, R ELEV PITOT, R ALPHA VANE, and AUX PITOT lights on the window and pitot heat module go off.

(h) Remove the ground from pin F12 of connector D3973E.

1) Make sure the CAPT PITOT, L ELEV PITOT, L ALPHA VANE, TEMP PROBE, F/O PITOT, R ELEV PITOT, R ALPHA VANE, and AUX PITOT lights on the window and pitot heat module go on.

(i) Remove the breakout box.

(j) Do this task for DEU 1, M1808: Display Electronic Unit Installation, TASK 31-62-21-400-801.

ECCN 9E991 BOEING PROPRIETARY - See title page for details

LOM ALL

END OF TASK

TASK 30-31-00-730-801

3. Pitot Probe, AOA Sensor, and TAT Probe Heater - System Test

(Figure 501)

A. Tools/Equipment

NOTE: When more than one tool part number is listed under the same "Reference" number, the tools shown are alternates to each other within the same airplane series. Tool part numbers that are replaced or non-procurable are preceded by "Opt:", which stands for Optional.

Reference	Description
COM-1523	Stand and Personnel Lifting Equipment - General Purpose Part #: B-14 Supplier: 05060 Part #: B-9 Supplier: 05060 Part #: Z-45-25J Supplier: 59497

B. Location Zones

Zone	Area
113	Area Above and Outboard of Nose Landing Gear Wheel Well - Left
114	Area Above and Outboard of Nose Landing Gear Wheel Well - Right

C. Procedure

SUBTASK 30-31-00-860-019

WARNING

MAKE SURE THAT THE ATC TRANSPONDERS ARE IN THE STANDBY MODE WHEN YOU SIMULATE ALTITUDE. YOU CAN ACCIDENTALLY CAUSE TCAS TARGETS. AIR TRAFFIC IN THE AREA WILL CHANGE DIRECTION QUICKLY TO GO AWAY FROM THESE TARGETS. THIS CAN CAUSE INJURIES TO PERSONNEL AND DAMAGE TO EQUIPMENT.

(1) Make sure that the Air Traffic Control (ATC) transponders are in standby mode.

LOM 402, 404, 406, 407, 411, 416, 420, 422, 425, 432-434, 440, 442-447, 450-463, 465-999

(a) Set the Mode Select switch on the ATC control panel, P8, to STBY.

LOM 412, 415, 423, 424, 426-431, 437-439, 441, 464

(b) Set the Mode Reply switch on the ATC control panel, P8, to STBY.

LOM ALL

SUBTASK 30-31-00-860-011

(2) Make sure that there are no protective covers on the air data sensors.

(a) If there are any protective covers, then proceed with the next step; otherwise, continue with SUBTASK 30-31-00-865-002.

SUBTASK 30-31-00-865-006

(3) Open these circuit breakers and install safety tags:

CAPT Electrical System Panel, P18-3

Row	Col	Number	Name
C	1	C00523	HEATERS CAPT PITOT
C	2	C00238	HEATERS TEMP PROBE

ECCN 9E991 BOEING PROPRIETARY - See title page for details

(Continued)

CAPT Electrical System Panel, P18-3

Row	Col	Number	Name
C	3	C01072	HEATERS ALPHA VANE LEFT
C	4	C00236	HEATERS ELEV PITOT LEFT
D	3	C01071	HEATERS ALPHA VANE RIGHT
D	4	C00237	HEATERS ELEV PITOT RIGHT
D	5	C00525	HEATERS F/O PITOT
D	6	C00524	HEATERS AUX PITOT

SUBTASK 30-31-00-860-010

(4) Remove the protective covers.

SUBTASK 30-31-00-865-004

(5) Remove the safety tags and close these circuit breakers:

CAPT Electrical System Panel, P18-3

Row	Col	Number	Name
C	1	C00523	HEATERS CAPT PITOT
C	2	C00238	HEATERS TEMP PROBE
C	3	C01072	HEATERS ALPHA VANE LEFT
C	4	C00236	HEATERS ELEV PITOT LEFT
D	3	C01071	HEATERS ALPHA VANE RIGHT
D	4	C00237	HEATERS ELEV PITOT RIGHT
D	5	C00525	HEATERS F/O PITOT
D	6	C00524	HEATERS AUX PITOT

(a) Make sure that the amber OVERHEAT lights on the window and pitot heat module go off.

SUBTASK 30-31-00-860-012

(6) Continue with SUBTASK 30-31-00-860-003.

SUBTASK 30-31-00-865-002

(7) Make sure that these circuit breakers are closed:

CAPT Electrical System Panel, P18-3

Row	Col	Number	Name
C	1	C00523	HEATERS CAPT PITOT
C	2	C00238	HEATERS TEMP PROBE
C	3	C01072	HEATERS ALPHA VANE LEFT
C	4	C00236	HEATERS ELEV PITOT LEFT
D	3	C01071	HEATERS ALPHA VANE RIGHT
D	4	C00237	HEATERS ELEV PITOT RIGHT
D	5	C00525	HEATERS F/O PITOT
D	6	C00524	HEATERS AUX PITOT

(a) Make sure that the amber OVERHEAT lights on the window and pitot heat module go off.

SUBTASK 30-31-00-860-003

(8) Put the PROBE HEAT A switch in the ON position.

(a) Make sure that the CAPT PITOT, L ELEV PITOT, L ALPHA VANE, and TEMP PROBE lights on the window and pitot heat module go off.

ECCN 9E991 BOEING PROPRIETARY - See title page for details

SUBTASK 30-31-00-860-004

(9) Put the PROBE HEAT B switch in the ON position.

(a) Make sure that the F/O PITOT, R ELEV PITOT, R ALPHA VANE, and AUX PITOT lights on the window and pitot heat module go off.

SUBTASK 30-31-00-700-001

WARNING DO NOT TOUCH AIR DATA SENSORS WHEN HOT. A HOT AIR DATA SENSOR CAN CAUSE INJURIES TO PERSONNEL AND DAMAGE TO EQUIPMENT CAN OCCUR.

(10) Make sure that the air data sensor heaters are heating by using one of these methods:

NOTE: You will need a work platform, COM-1523, or equivalent to get access to the elevator pitot probe. If you use an infrared or thermal imager to check for heat, then you do not need the stand.

(a) Spray the air data sensors with water to check for heat.

(b) Measure the temperature of the sensor with an infrared or contact thermometer.

(c) Look at the sensor with an infrared or thermal imager.

LOM 404, 416, 443, 444

SUBTASK 30-31-00-860-007

(11) Press and hold the TAT TEST switch.

(a) Make sure the Total Air Temperature (TAT) probe heaters get warm.

SUBTASK 30-31-00-860-008

(12) Release the TAT TEST switch.

LOM ALL

SUBTASK 30-31-00-860-005

LOM 404, 407, 420 PRE SB 737-30A1063

(13) Put the PROBE HEAT switches in the OFF position.

LOM 402, 406, 411, 412, 415, 416, 422-434, 437-447, 450-999; LOM 404, 407, 420 POST SB 737-30A1063

(14) Put the PROBE HEAT switches in the AUTO position.

SUBTASK 30-31-00-860-014

(15) Do this task to test the AUTO position of the PROBE HEAT switches: AUTO Air Data Sensor Heating - Operational Test, TASK 30-31-00-750-801.

NOTE: It is only necessary to perform a test of the AUTO position after replacement of the window/pitot heat module (P5-9). A test of the AUTO position is not necessary following replacement of a pitot probe, Angle of Attack (AOA) sensor, or TAT probe.

LOM ALL

END OF TASK

ECCN 9E991 BOEING PROPRIETARY - See title page for details

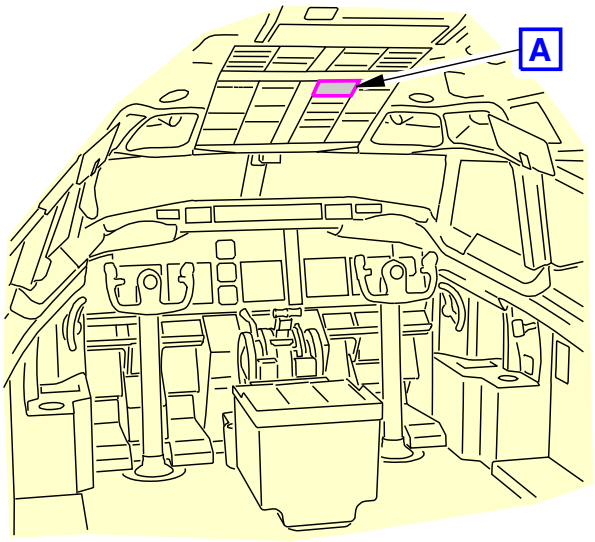

FLIGHT COMPARTMENT

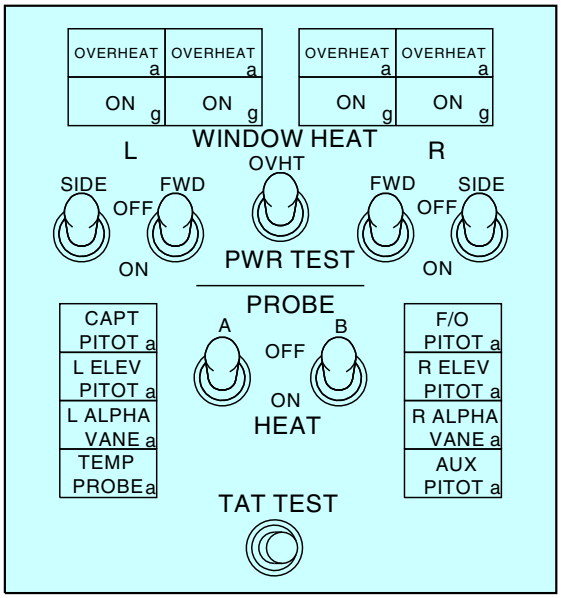

WINDOW/PITOT HEAT MODULE
(P5-9)

A

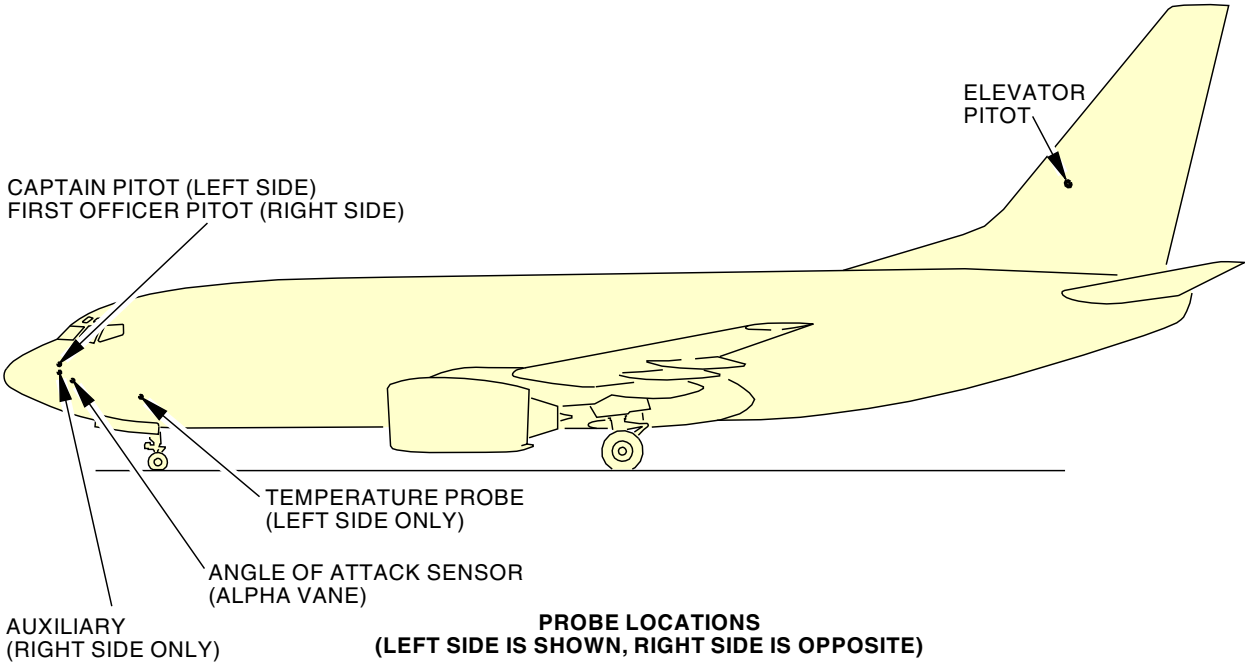

PROBE LOCATIONS
(LEFT SIDE IS SHOWN, RIGHT SIDE IS OPPOSITE)

N62400 S0006573123_V2

Window/Pitot Heat Module
Figure 501/30-31-00-990-801 (Sheet 1 of 5)

ECCN 9E991 BOEING PROPRIETARY - See title page for details

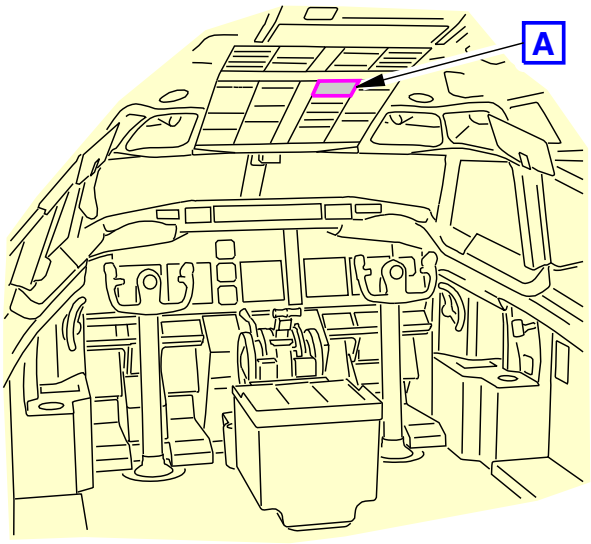

FLIGHT COMPARTMENT

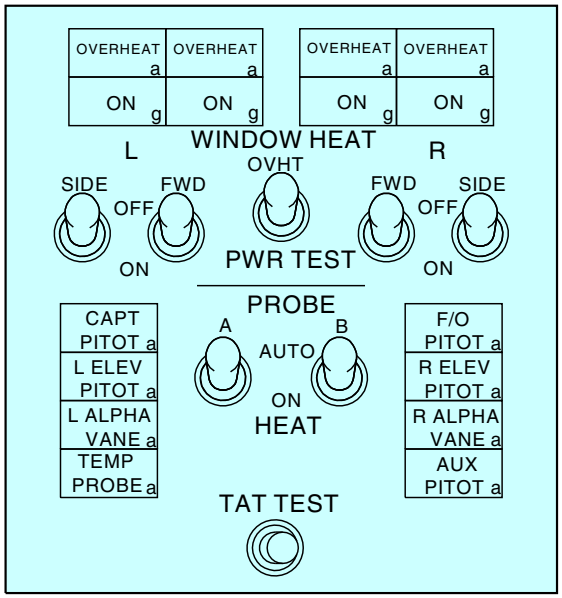

WINDOW/PITOT HEAT MODULE
(P5-9)

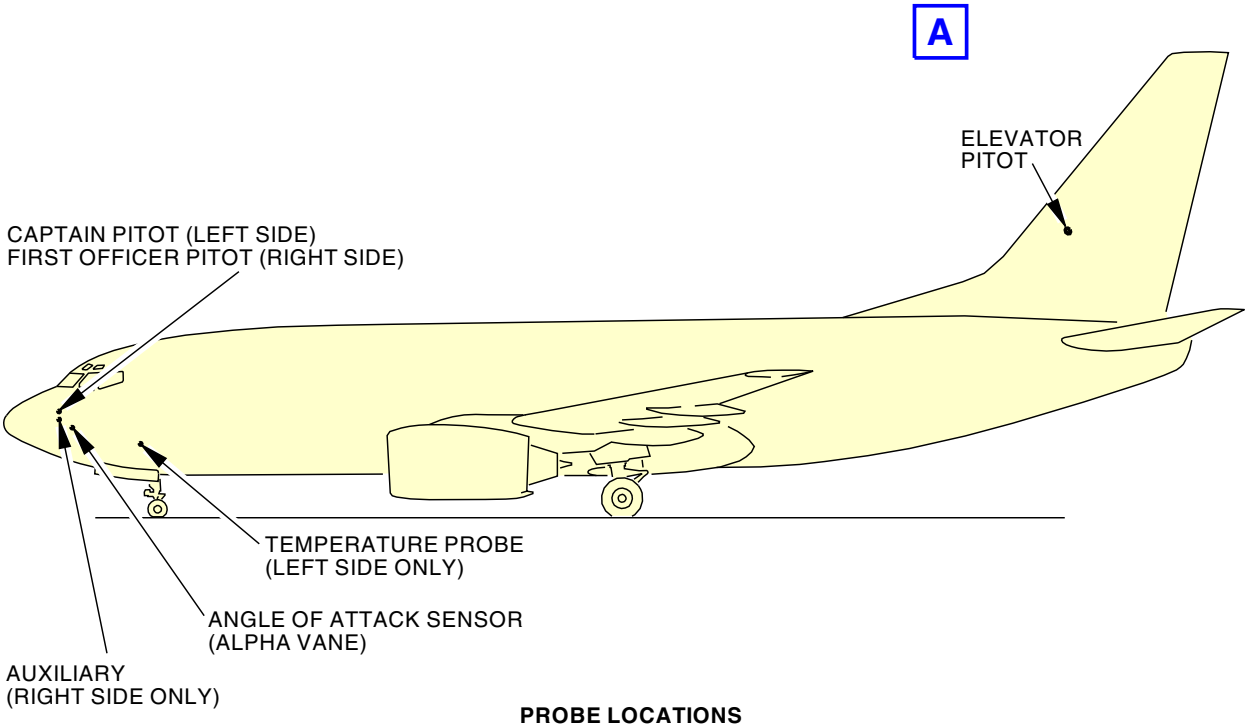

PROBE LOCATIONS
(LEFT SIDE IS SHOWN, RIGHT SIDE IS OPPOSITE)

2010681 S0000396481_V2

Window/Pitot Heat Module
Figure 501/30-31-00-990-801 (Sheet 2 of 5)

ECCN 9E991 BOEING PROPRIETARY - See title page for details

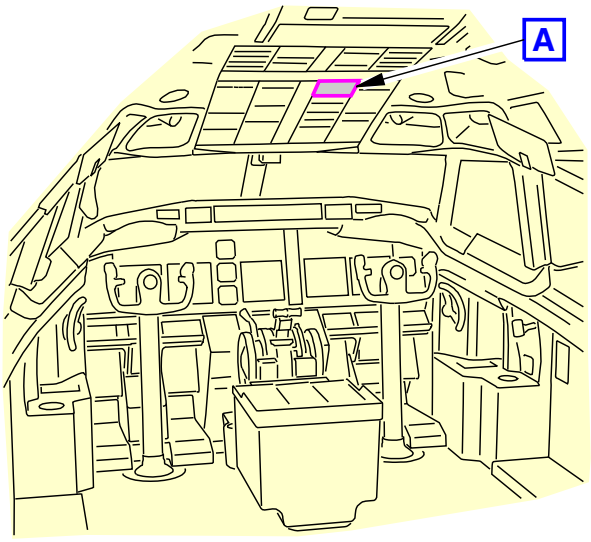

FLIGHT COMPARTMENT

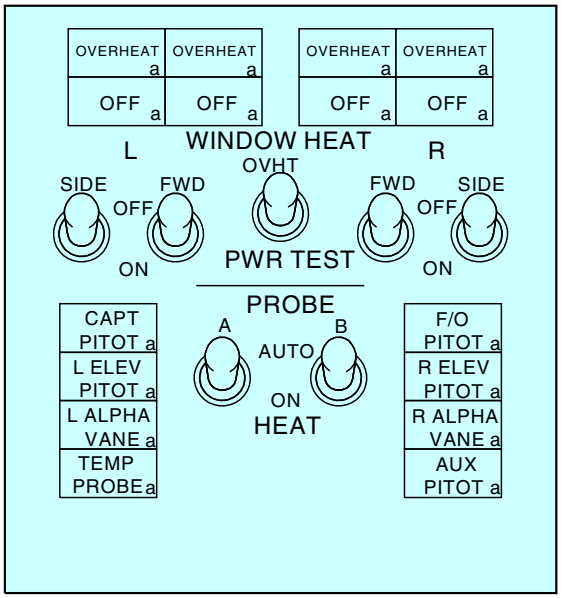

WINDOW/PITOT HEAT MODULE
(P5-9)

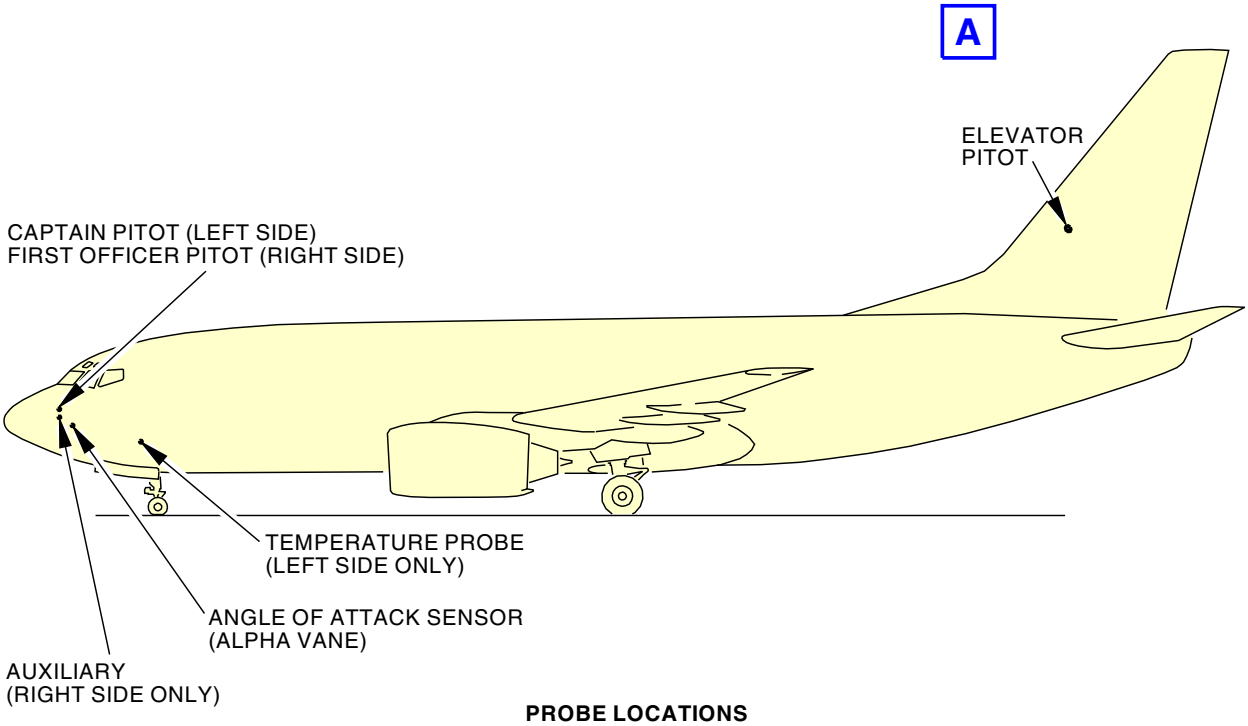

PROBE LOCATIONS
(LEFT SIDE IS SHOWN, RIGHT SIDE IS OPPOSITE)

2010690 S0000396483_V2

Window/Pitot Heat Module
Figure 501/30-31-00-990-801 (Sheet 3 of 5)

ECCN 9E991 BOEING PROPRIETARY - See title page for details

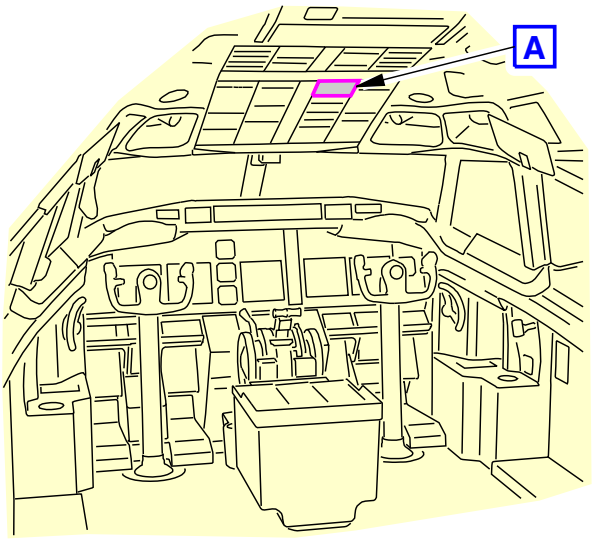

FLIGHT COMPARTMENT

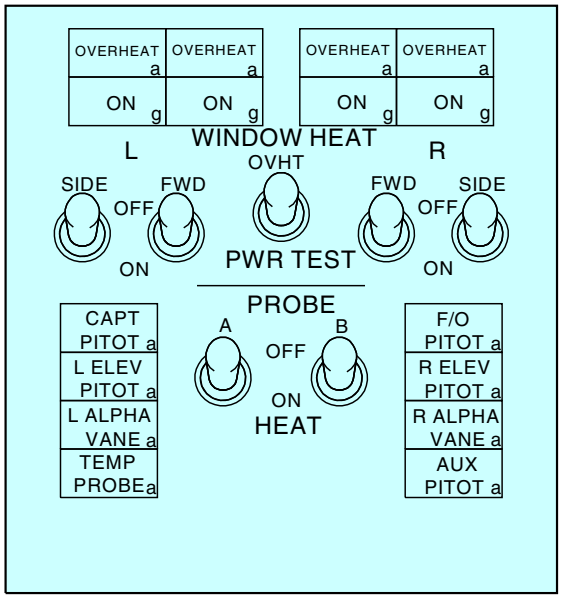

WINDOW/PITOT HEAT MODULE
(P5-9)

A

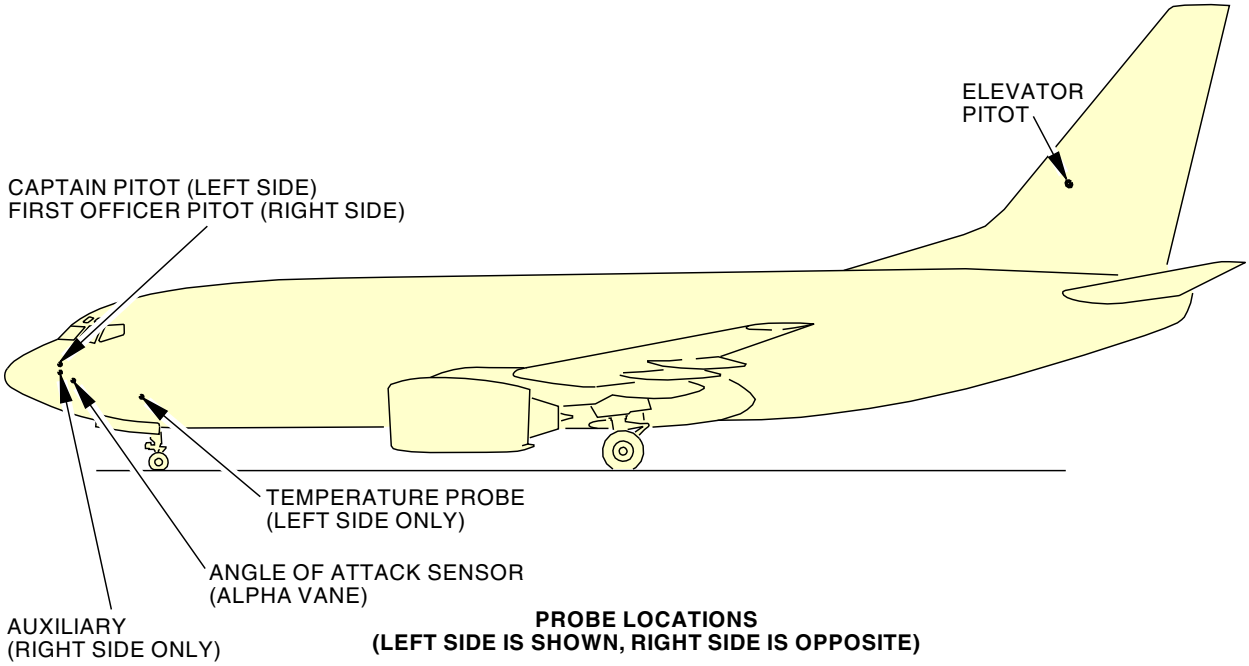

PROBE LOCATIONS
(LEFT SIDE IS SHOWN, RIGHT SIDE IS OPPOSITE)

N62412 S0006573126_V2

Window/Pitot Heat Module
Figure 501/30-31-00-990-801 (Sheet 4 of 5)

ECCN 9E991 BOEING PROPRIETARY - See title page for details

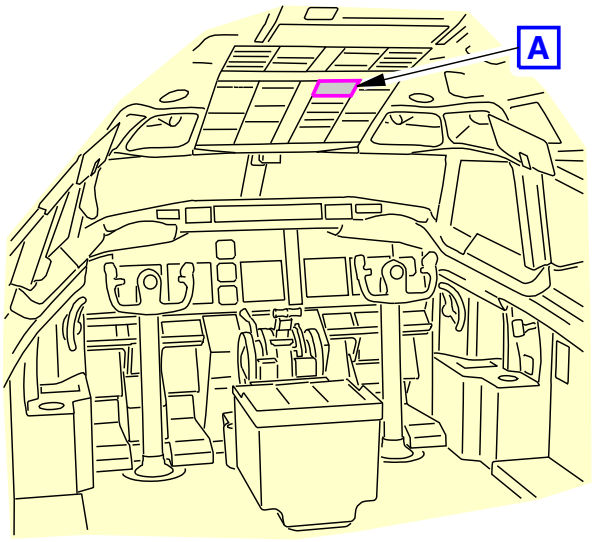

FLIGHT COMPARTMENT

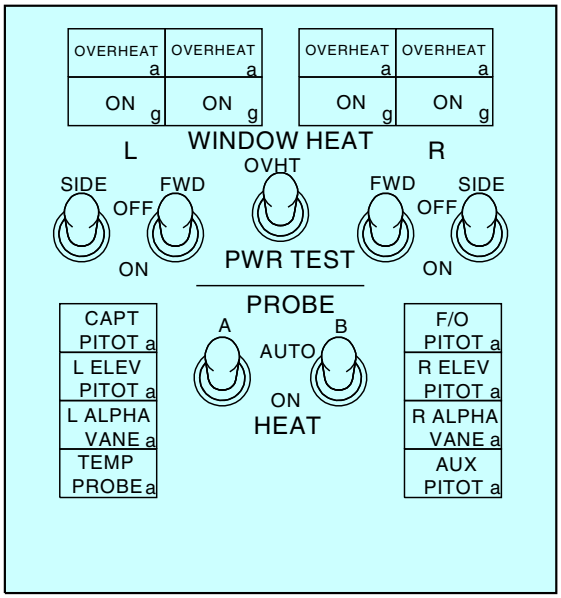

WINDOW/PITOT HEAT MODULE
(P5-9)

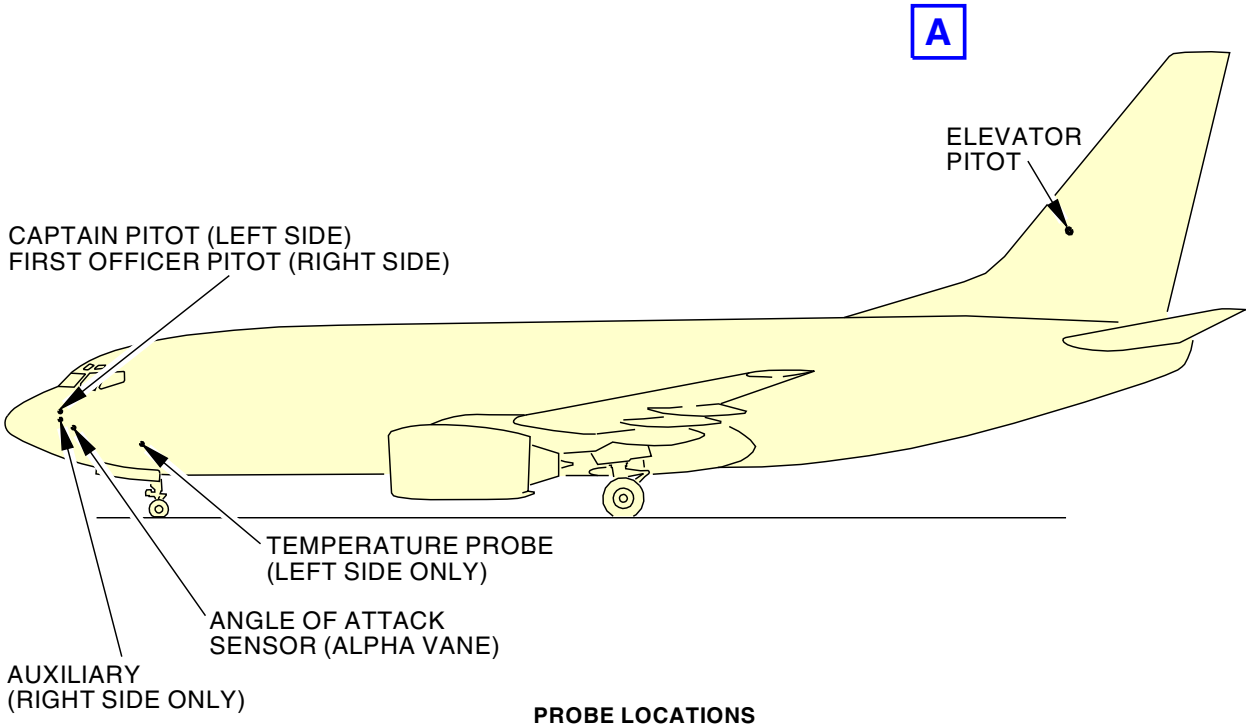

PROBE LOCATIONS
(LEFT SIDE IS SHOWN, RIGHT SIDE IS OPPOSITE)

2010691 S0000396484_V2

Window/Pitot Heat Module
Figure 501/30-31-00-990-801 (Sheet 5 of 5)

ECCN 9E991 BOEING PROPRIETARY - See title page for details

CONTROL CABIN WINDOW HEAT - MAINTENANCE PRACTICES

1. General

A. This procedure has these tasks:

(1) Control Cabin Window Heat Deactivation.

(2) Control Cabin Window Heat Activation.

TASK 30-41-00-040-801

2. Control Cabin Window Heat - Deactivation

Figure 30-31-00-990-801

A. General

(1) This procedure removes electrical power to the Control Cabin Window Heat systems.

B. References

Reference	Title
30-31-00-990-801	Figure: Window/Pitot Heat Module (P/B 501)

C. Location Zones

Zone	Area
113	Area Above and Outboard of Nose Landing Gear Wheel Well - Left
114	Area Above and Outboard of Nose Landing Gear Wheel Well - Right
211	Flight Compartment - Left
212	Flight Compartment - Right
323	Vertical Fin - Front Spar To Rear Spar
324	Vertical Fin - Rear Spar To Trailing Edge

D. Procedure

SUBTASK 30-41-00-860-018

WARNING

DO NOT TOUCH THE AIR DATA SENSORS. THE SENSORS CAN GET VERY HOT. THE SENSORS CAN BURN YOU.

CAUTION

REMOVE ALL CAPS AND COVERS FROM ALL AIR DATA SENSORS. THE SENSORS BECOME HOT. THIS CAN CAUSE DAMAGE TO THE COVERS.

(1) Open these circuit breakers and install safety tags:

CAPT Electrical System Panel, P18-3

Row	Col	Number	Name
C	1	C00523	HEATERS CAPT PITOT
C	2	C00238	HEATERS TEMP PROBE
C	3	C01072	HEATERS ALPHA VANE LEFT
C	4	C00236	HEATERS ELEV PITOT LEFT
LOM 402, 404, 406, 407, 411, 412, 415, 416, 420, 422-434, 437-447, 450-464			
D	1	C00226	WINDOW HEAT CONTROL RIGHT FRONT AC
D	2	C00225	WINDOW HEAT CONTROL LEFT SIDE AC

ECCN 9E991 BOEING PROPRIETARY - See title page for details

(Continued)

CAPT Electrical System Panel, P18-3

Row	Col	Number	Name
LOM ALL			
D	3	C01071	HEATERS ALPHA VANE RIGHT
D	4	C00237	HEATERS ELEV PITOT RIGHT
D	5	C00525	HEATERS F/O PITOT
D	6	C00524	HEATERS AUX PITOT
LOM 402, 404, 406, 407, 411, 412, 415, 416, 420, 422-434, 437-447, 450-464			
E	1	C00224	WINDOW HEAT CONTROL LEFT FRONT AC
E	2	C00227	WINDOW HEAT CONTROL RIGHT SIDE AC

F/O Electrical System Panel, P6-11

Row	Col	Number	Name
LOM ALL			
B	8	C00393	WINDOW HEAT POWER RIGHT SIDE
B	9	C00228	WINDOW HEAT POWER LEFT FRONT

F/O Electrical System Panel, P6-12

Row	Col	Number	Name
B	8	C00394	WINDOW HEAT POWER RIGHT FRONT
B	9	C00392	WINDOW HEAT POWER LEFT SIDE

E. Control Cabin Window Heat -Tryout

NOTE: This tryout is to make sure the Control Cabin Window heat is in a zero energy state.

SUBTASK 30-41-00-210-007

(1) At the P5-9 Window/Pitot Heat Module do the following steps:

(a) Press the PROBE HEAT A switch to the ON position.

1) Make sure the CAPT PITOT, L ELEV PITOT, L ALPHA VANE, and TEMP PROBE lights on the Window and Pitot Heat Module remain ON.

(b) Press the PROBE HEAT A switch to the OFF position.

(c) Press the PROBE HEAT B switch to the ON position.

1) Make sure the CAPT PITOT, L ELEV PITOT, L ALPHA VANE, and TEMP PROBE lights on the Window and Pitot Heat Module remain ON.

(d) Press the PROBE HEAT B switch to the OFF position.

(e) Press the four WINDOW HEAT switches to the ON position one at a time.

1) Make sure the corresponding ON light on the Window and Pitot Heat Module remains OFF.

2) Make sure the corresponding OVERHEAT light turns ON.

(f) Press all four WINDOW HEAT switches on the Window and Pitot Heat Module to the OFF position.

END OF TASK

ECCN 9E991 BOEING PROPRIETARY - See title page for details

TASK 30-41-00-440-801

3. **Control Cabin Window Heat - Activation**

(Figure 30-31-00-990-801)

A. **General**

(1) This procedure add electrical power to the Control Cabin Window Heat systems.

B. **References**

Reference	Title
30-31-00-990-801	Figure: Window/Pitot Heat Module (P/B 501)

C. **Location Zones**

Zone	Area
113	Area Above and Outboard of Nose Landing Gear Wheel Well - Left
114	Area Above and Outboard of Nose Landing Gear Wheel Well - Right
211	Flight Compartment - Left
212	Flight Compartment - Right
323	Vertical Fin - Front Spar To Rear Spar
324	Vertical Fin - Rear Spar To Trailing Edge

D. **Control Cabin Window Heat Activation**

SUBTASK 30-41-00-860-019

WARNING DO NOT TOUCH THE AIR DATA SENSORS. THE SENSORS CAN GET VERY HOT. THE SENSORS CAN BURN YOU.

CAUTION REMOVE ALL CAPS AND COVERS FROM ALL AIR DATA SENSORS. THE SENSORS BECOME HOT. THIS CAN CAUSE DAMAGE TO THE COVERS.

(1) Remove the safety tags and close these circuit breakers:

CAPT Electrical System Panel, P18-3

Row	Col	Number	Name
C	1	C00523	HEATERS CAPT PITOT
C	2	C00238	HEATERS TEMP PROBE
C	3	C01072	HEATERS ALPHA VANE LEFT
C	4	C00236	HEATERS ELEV PITOT LEFT
LOM 402, 404, 406, 407, 411, 412, 415, 416, 420, 422-434, 437-447, 450-464			
D	1	C00226	WINDOW HEAT CONTROL RIGHT FRONT AC
D	2	C00225	WINDOW HEAT CONTROL LEFT SIDE AC
LOM ALL			
D	3	C01071	HEATERS ALPHA VANE RIGHT
D	4	C00237	HEATERS ELEV PITOT RIGHT
D	5	C00525	HEATERS F/O PITOT
D	6	C00524	HEATERS AUX PITOT
LOM 402, 404, 406, 407, 411, 412, 415, 416, 420, 422-434, 437-447, 450-464			
E	1	C00224	WINDOW HEAT CONTROL LEFT FRONT AC
E	2	C00227	WINDOW HEAT CONTROL RIGHT SIDE AC

ECCN 9E991 BOEING PROPRIETARY - See title page for details

F/O Electrical System Panel, P6-11

Row	Col	Number	Name
LOM ALL			
B	8	C00393	WINDOW HEAT POWER RIGHT SIDE
B	9	C00228	WINDOW HEAT POWER LEFT FRONT

F/O Electrical System Panel, P6-12

Row	Col	Number	Name
B	8	C00394	WINDOW HEAT POWER RIGHT FRONT
B	9	C00392	WINDOW HEAT POWER LEFT SIDE

END OF TASK

ECCN 9E991 BOEING PROPRIETARY - See title page for details

CONTROL CABIN WINDOW ANTI-ICING SYSTEM - ADJUSTMENT/TEST

1. General

A. This procedure contains the following task:

(1) An operational test of the window heat system.

TASK 30-41-00-710-801

2. Window Heat System - Operational Test

(Figure 501)

A. General

(1) This test makes sure the control cabin window anti-icing system provides heat to these control cabin windows:

(a) Front windows

(b) Side windows

LOM 411, 412, 415, 423, 424, 427, 428, 439, 441, 464

(c) Number 3 window

LOM 402 PRE SB 737-56-1017

(d) Number 4 and 5 windows.

LOM ALL

B. Tools/Equipment

NOTE: When more than one tool part number is listed under the same "Reference" number, the tools shown are alternates to each other within the same airplane series. Tool part numbers that are replaced or non-procurable are preceded by "Opt:", which stands for Optional.

Reference	Description
COM-1572	Thermometer - Infrared, Intrinsically Safe Part #: 568 EX Supplier: 89536 Part #: 568 EX/BR Supplier: 89536 Part #: 568 EX/CN Supplier: 89536 Part #: 568 EX/ETL Supplier: 89536 Opt Part #: DHS24XC-FM Supplier: 08086 Opt Part #: DHS24XF-FM Supplier: 08086 Opt Part #: EX-MP4 A Supplier: 3GT36 Opt Part #: IR-16L3 IS Supplier: 75037
STD-1179	Tester - Pyrometer

C. Location Zones

Zone	Area
211	Flight Compartment - Left
212	Flight Compartment - Right

ECCN 9E991 BOEING PROPRIETARY - See title page for details

D. Window Heat System Operational Test

SUBTASK 30-41-00-080-001

> **CAUTION** ALL PROTECTIVE CAPS AND COVERS MUST BE REMOVED FROM ALL AIR DATA SENSORS. THE SENSORS AND COVERS COULD BE DAMAGED IF THERE ARE COVERS INSTALLED ON THE SENSORS WHEN THEY ARE HEATED.

(1) Make sure that there are no protective covers on the air data sensors.

(a) If protective covers are found, then remove them before you continue this test.

SUBTASK 30-41-00-840-001

(2) Use a Infrared Thermometer, COM-1572 (including pyrometer, STD-1179) or other temperature indicating device near each window temperature sensor to measure the window temperature.

SUBTASK 30-41-00-880-001

(3) If the window temperature is greater than 110°F (43°C), then cool the window.

NOTE: The window can be cooled with cool water or by providing shade from the sun.

SUBTASK 30-41-00-860-001

(4) One switch at a time, put the WINDOW HEAT switches on the Window and Pitot Heat Module to the on position.

LOM 402, 404, 406, 407, 411, 412, 415, 416, 420, 422-426, 429-434, 437-447, 450-999

(a) Make sure that the corresponding ON light on the window and pitot heat module comes on.

NOTE: It can take up to 15 seconds for the light to come on.

LOM 427, 428

(b) Make sure that the corresponding OFF light on the window and pitot heat module goes out.

NOTE: It can take up to 15 seconds for the light to go out.

LOM ALL

(c) Make sure that both master caution lights are off.

SUBTASK 30-41-00-210-001

(5) Wait for the windows to heat up.

(a) Make sure that the front and side windows stabilize at 90°F (32°C) to 120°F (49°C).

NOTE: It can take up to 4 minutes for the window temperatures to stabilize.

LOM 402 PRE SB 737-56-1017

(b) Make sure that the number 4 and number 5 windows heat up to more than 90°F (32°C) but less than 125°F (52°C).

LOM 411, 412, 415, 423, 424, 427, 428, 439, 441, 464

(c) Make sure that the number 3 windows heat up to more than 65°F (18°C) but less than 105°F (41°C).

LOM ALL

SUBTASK 30-41-00-860-002

(6) Put the WINDOW HEAT TEST OVHT/PWR switch to the OVHT position for 1 second.

ECCN 9E991 BOEING PROPRIETARY - See title page for details

(a) Make sure that the OVERHEAT lights come on.

(b) Make sure that the MASTER CAUTION lights come on.

(c) Make sure that ANTI-ICE light comes on.

LOM 402, 404, 406, 407, 411, 412, 415, 416, 420, 422-426, 429-434, 437-447, 450-999

(d) Make sure that the ON lights go off in less than 70 seconds.

LOM 427, 428

(e) Make sure that the OFF lights come on in less than 70 seconds.

LOM ALL

(f) Make sure that the windows start to cool.

(g) Wait until the window temperatures go below 110°F (43°C).

SUBTASK 30-41-00-860-003

(7) One switch at a time, put each WINDOW HEAT power switch in the off position for 1 second and then put the switch in the on position.

(a) Make sure that the applicable OVERHEAT light goes off.

LOM 402, 404, 406, 407, 411, 412, 415, 416, 420, 422-426, 429-434, 437-447, 450-999

(b) Make sure that the window heat ON light comes on.

LOM 427, 428

(c) Make sure that the window heat OFF light goes off.

LOM ALL

(d) Make sure that the windows begin to heat.

SUBTASK 30-41-00-860-004

(8) Press either MASTER CAUTION light.

(a) Make sure that the MASTER CAUTION light goes off.

(b) Make sure that the ANTI-ICE light goes off.

SUBTASK 30-41-00-860-005

(9) Wait 4 minutes.

SUBTASK 30-41-00-860-006

(10) Hold the window heat TEST switch to PWR.

LOM 402, 404, 406, 407, 411, 412, 415, 416, 420, 422-426, 429-434, 437-447, 450-999

(a) Make sure that the window heat ON lights stay on for each window.

LOM 427, 428

(b) Make sure that the window heat OFF lights stay off for each window.

LOM 402, 404, 406, 407, 411, 412, 415, 416, 420, 422-426, 429-434, 437-447, 450-999

(c) If holding the window heat TEST switch to PWR causes the OVERHEAT light to illuminate, the window heat ON lights shall go off within 70 seconds.

LOM 427, 428

(d) If holding the window heat TEST switch to PWR causes the OVERHEAT light to illuminate, the window heat OFF lights shall come on within 70 seconds.

LOM ALL

ECCN 9E991 BOEING PROPRIETARY - See title page for details

SUBTASK 30-41-00-860-011

(11) Release the window heat TEST switch.

SUBTASK 30-41-00-860-007

(12) Put the WINDOW HEAT power switches in the off position.

SUBTASK 30-41-00-860-010

(13) If the PWR TEST switch caused an overheat condition, then press either MASTER CAUTION light.

(a) Make sure that the OVERHEAT lights, the MASTER CAUTION lights, and the ANTI-ICE lights are off.

END OF TASK

ECCN 9E991 BOEING PROPRIETARY - See title page for details

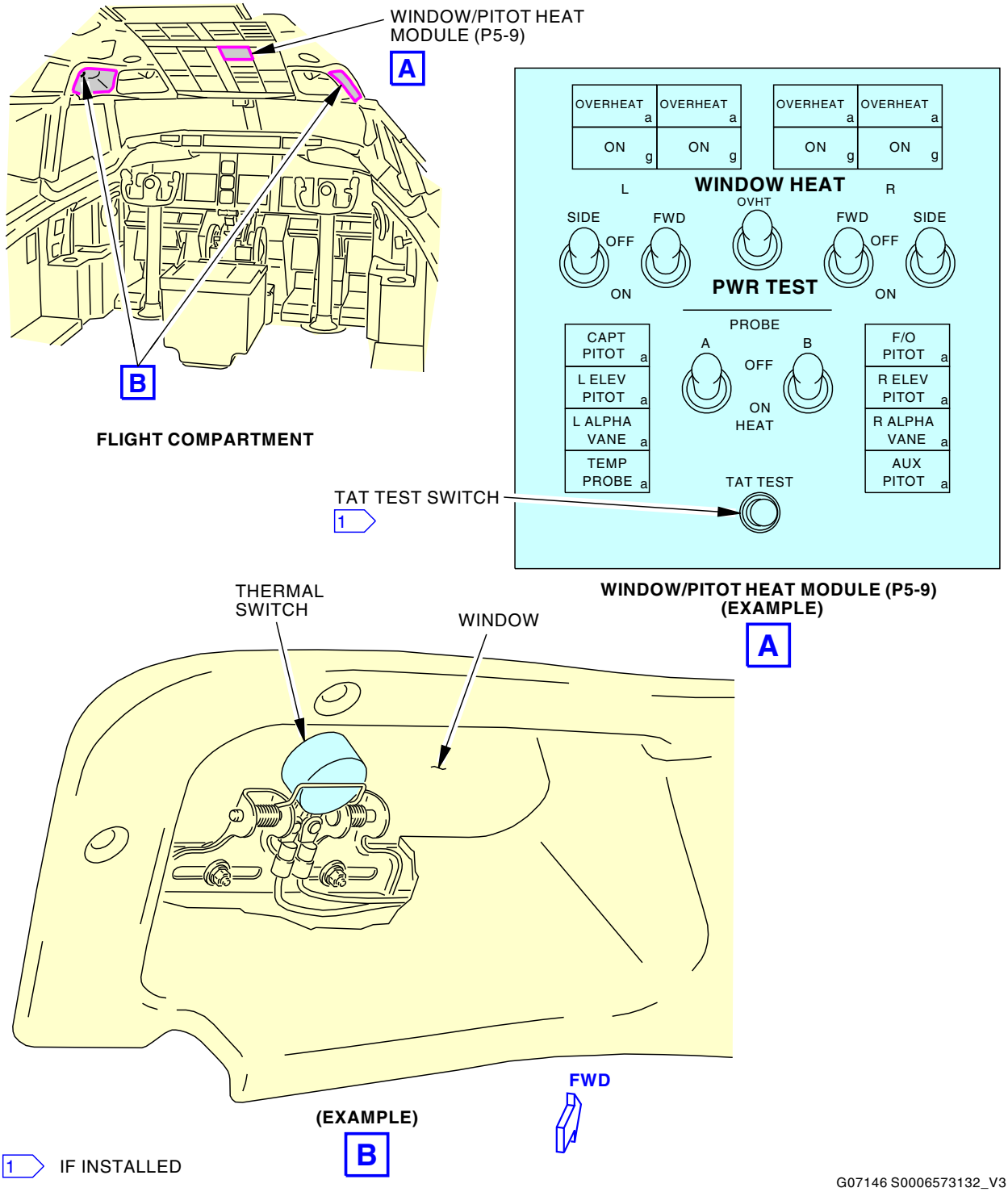

Control Cabin Window Anti-Icing System Test
Figure 501/30-41-00-990-801 (Sheet 1 of 5)

ECCN 9E991 BOEING PROPRIETARY - See title page for details

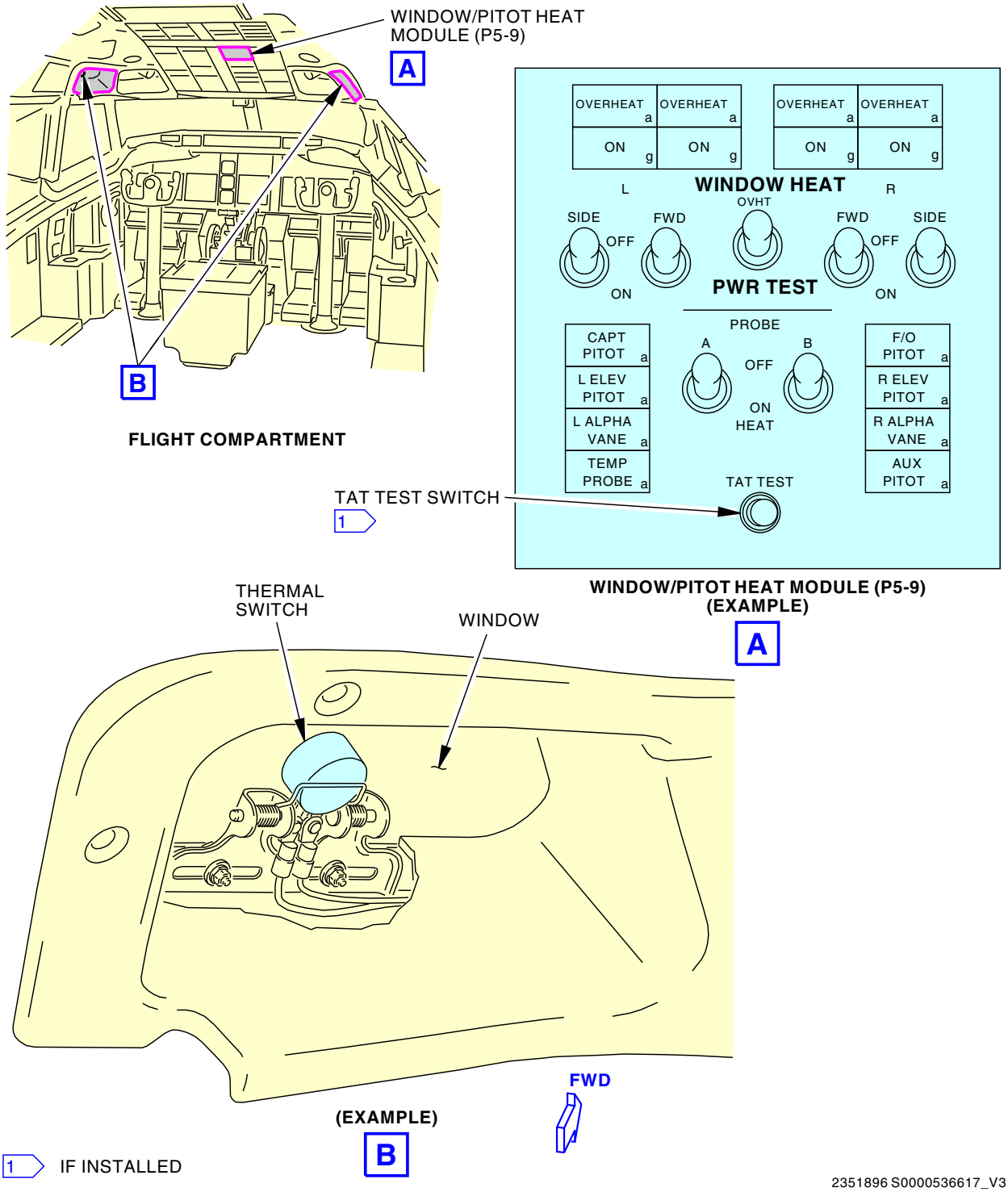

Control Cabin Window Anti-Icing System Test
Figure 501/30-41-00-990-801 (Sheet 2 of 5)

ECCN 9E991 BOEING PROPRIETARY - See title page for details

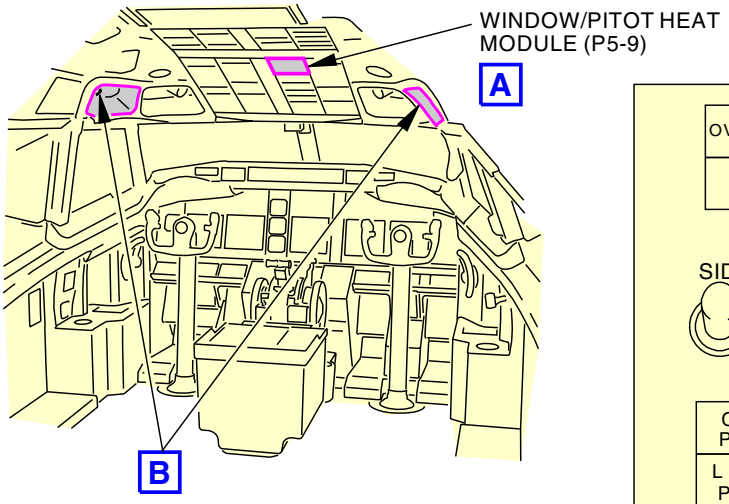

FLIGHT COMPARTMENT

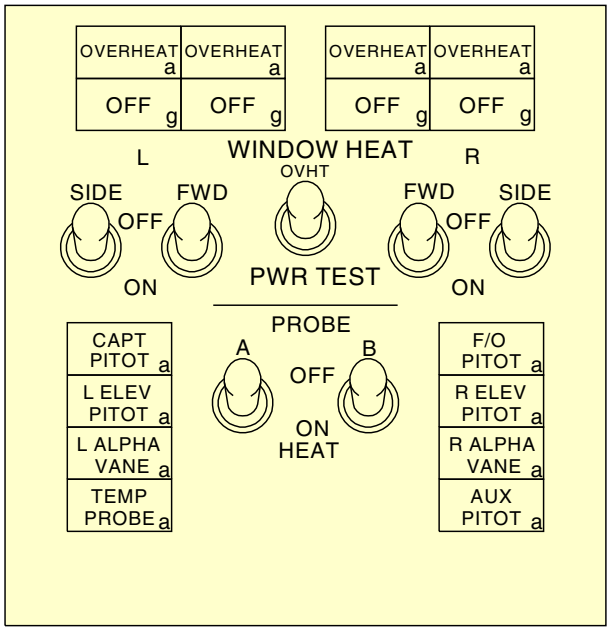

WINDOW/PITOT HEAT MODULE (P5-9)

A

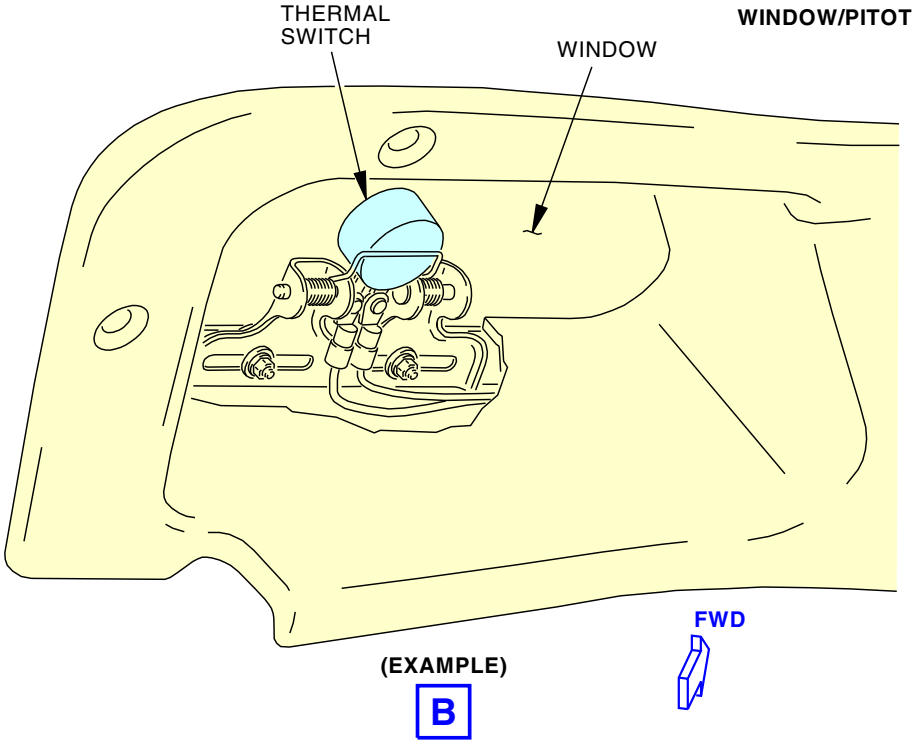

(EXAMPLE)

K31123 S0006573133_V4

Control Cabin Window Anti-Icing System Test
Figure 501/30-41-00-990-801 (Sheet 3 of 5)

ECCN 9E991 BOEING PROPRIETARY - See title page for details

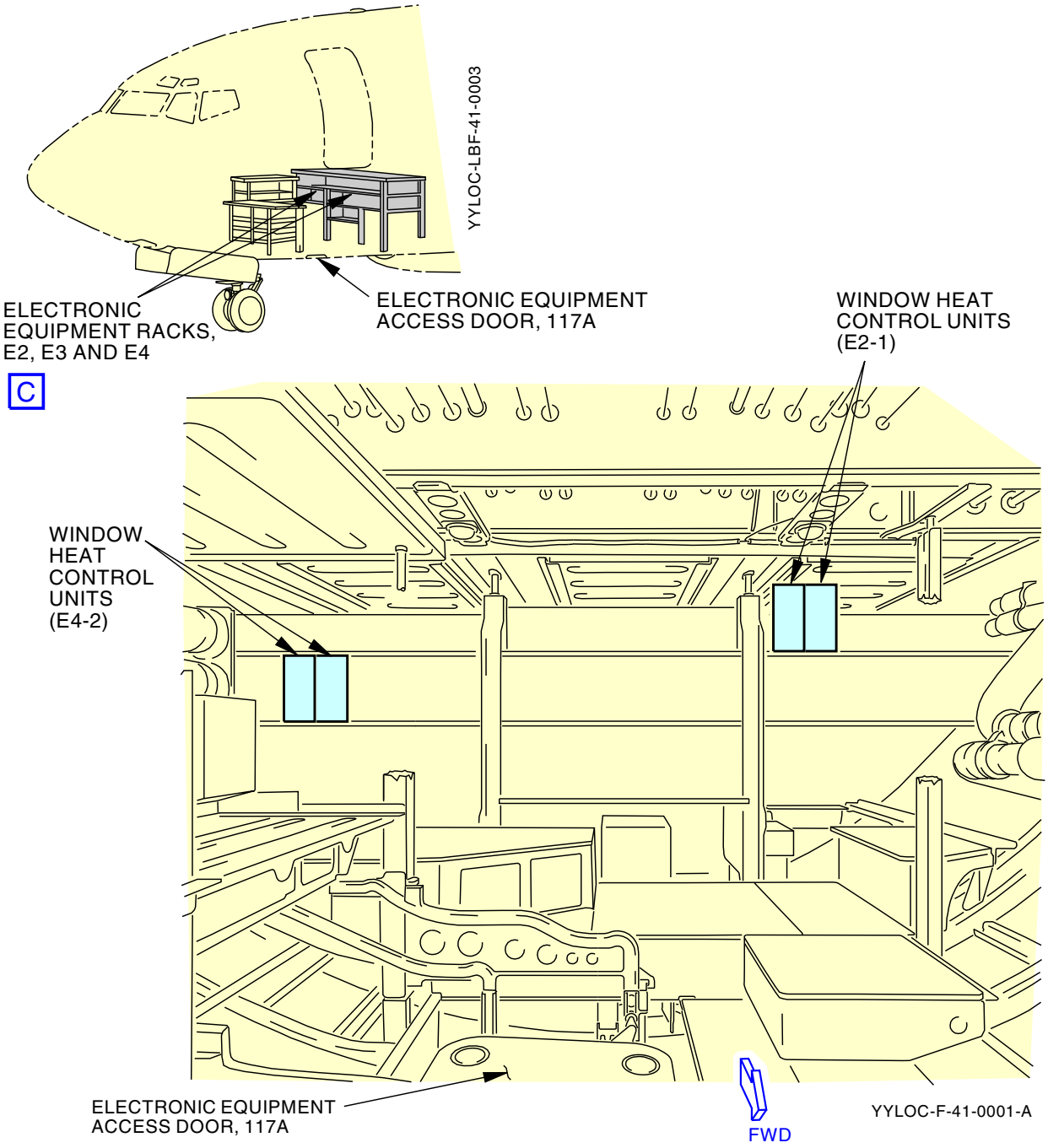

ELECTRONIC EQUIPMENT RACKS, E2, E3 AND E4

C

G07152 S0006573136_V2

Control Cabin Window Anti-Icing System Test
Figure 501/30-41-00-990-801 (Sheet 4 of 5)

ECCN 9E991 BOEING PROPRIETARY - See title page for details

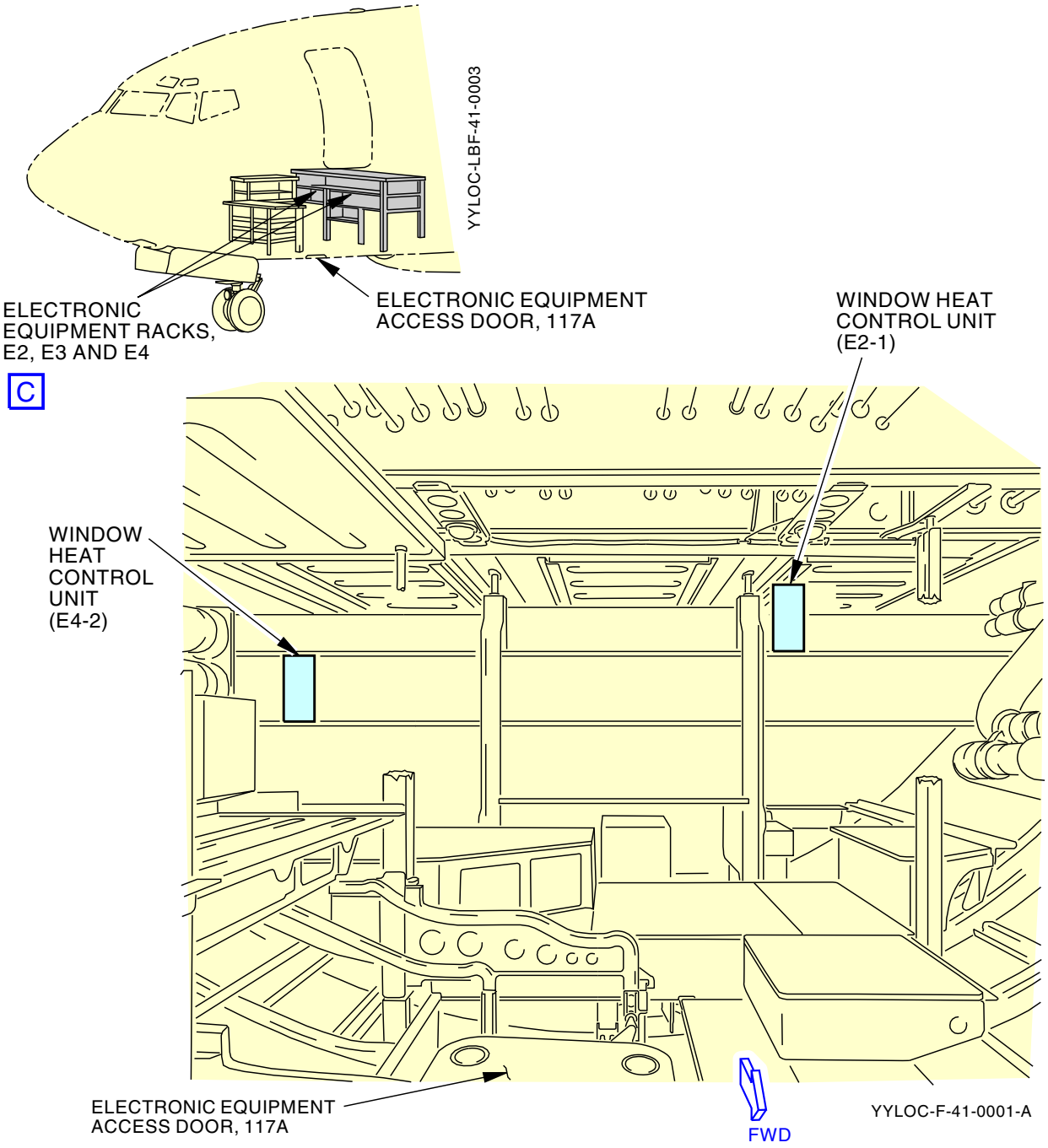

ELECTRONIC EQUIPMENT RACKS, E2, E3 AND E4

C

2430778 S0000562205_V1

Control Cabin Window Anti-Icing System Test
Figure 501/30-41-00-990-801 (Sheet 5 of 5)

ECCN 9E991 BOEING PROPRIETARY - See title page for details

TASK 30-41-00-200-801

1. Coil Cord - Inspection

(Figure 601)

A. General

(1) This procedure has a task to do an inspection of the No. 2 window coil cord and coil cord keyway positions.

B. References

Reference	Title
20-60-04-100-801	General Visual Inspection of EWIS (P/B 201)
25-11-21-000-801	Flight Compartment Forward Ceiling Panel Removal (P/B 201)
25-11-21-000-805	Flight Compartment Forward Ceiling Panel Removal (P/B 201)
25-11-21-400-801	Flight Compartment Forward Ceiling Panel Installation (P/B 201)
25-11-21-400-805	Flight Compartment Forward Ceiling Panel Installation (P/B 201)
30-41-00-710-801	Window Heat System - Operational Test (P/B 501)

C. Location Zones

Zone	Area
211	Flight Compartment - Left
212	Flight Compartment - Right

D. Prepare for the Inspection

SUBTASK 30-41-00-010-001

(1) Get access to the flight compartment.

SUBTASK 30-41-00-860-016

(2) Open these circuit breakers and install safety tags:

CAPT Electrical System Panel, P18-3

Row	Col	Number	Name
LOM 402, 404, 406, 407, 411, 412, 415, 416, 420, 422-434, 437-447, 450-464			
D	2	C00225	WINDOW HEAT CONTROL LEFT SIDE AC
E	2	C00227	WINDOW HEAT CONTROL RIGHT SIDE AC

F/O Electrical System Panel, P6-11

Row	Col	Number	Name
LOM ALL			
B	8	C00393	WINDOW HEAT POWER RIGHT SIDE

F/O Electrical System Panel, P6-12

Row	Col	Number	Name
B	9	C00392	WINDOW HEAT POWER LEFT SIDE

E. Coil Cord Inspection

SUBTASK 30-41-00-020-001

(1) Remove the coil cord from the captain's side of the flight compartment.

ECCN 9E991 BOEING PROPRIETARY - See title page for details

SUBTASK 30-41-00-210-002

(2) Examine the position of the captain's sidewall receptacle connector keyway.

(a) If the captain's sidewall receptacle connector keyway is not set at the up position, or 12 o'clock, do the steps that follow:

1) Remove the captain's sidewall (TASK 25-11-21-000-801 or TASK 25-11-21-000-805).

2) Remove the four screws [3] and four washers [2] at the sidewall receptacle connector.

3) Turn the sidewall receptacle connector keyway to the up position, or 12 o'clock, and install the screws and washers.

4) Install the captain's sidewall (TASK 25-11-21-400-801 or TASK 25-11-21-400-805).

LOM 402, 404, 406, 407, 411, 412, 415, 416, 420, 422-434, 437-447, 450-464

SUBTASK 30-41-00-210-012

(3) Examine the position of the captain's window receptacle connector keyway.

(a) If the captain's window receptacle connector keyway is not set at the left position, or 9 o'clock, do the steps that follow:

1) Remove the four screws [5] to remove the captain's window cover.

2) Remove the four screws [3] and four washers [2] at the window receptacle connector.

3) Turn the window receptacle connector keyway to the left position, or 9 o'clock, and install the screws and washers.

4) Install the captain's window cover.

LOM 465-999

SUBTASK 30-41-00-210-013

(4) Examine the position of the captain's window receptacle connector keyway.

(a) If the captain's window receptacle connector keyway is not set at the up position, or 12 o'clock, do the steps that follow:

1) Remove the four screws [5] to remove the captain's window cover.

2) Remove the four screws [3] and four washers [2] at the window receptacle connector.

3) Turn the window receptacle connector keyway to the up position, or 12 o'clock, and install the screws and washers.

4) Install the captain's window cover.

LOM ALL

SUBTASK 30-41-00-210-005

(5) Examine the captain's coil cord for signs of rub damage at the connector ends.

(a) Do this task: General Visual Inspection of EWIS, TASK 20-60-04-100-801.

LOM 402, 404, 406, 407, 411, 412, 415, 416, 420, 422-434, 437-447, 450-464

SUBTASK 30-41-00-420-001

(6) Install the coil cord on the captain's side of the flight compartment.

NOTE: The cord is reversible.

(a) Use best fit for left or right installation.

ECCN 9E991 BOEING PROPRIETARY - See title page for details

LOM 465-999

SUBTASK 30-41-00-420-003

(7) Install the coil cord on the captain's side of the flight compartment.

NOTE: The cord is nonreversible.

(a) Make sure that the window side connector has 5 pins.

(b) Make sure that the sidewall side connector has 6 pins.

LOM ALL

SUBTASK 30-41-00-020-002

(8) Remove the coil cord on the first officer's side of the flight compartment.

SUBTASK 30-41-00-210-004

(9) Examine the position of the first officer's sidewall receptacle connector keyway.

(a) If the first officer's sidewall receptacle connector keyway is not set at the up position, or 12 o'clock, do the steps that follow:

1) Remove the first officer's sidewall (TASK 25-11-21-000-801 or TASK 25-11-21-000-805).

2) Remove the four screws [3] and four washers [2] at the sidewall receptacle connector.

3) Turn the sidewall receptacle connector keyway to the up position, or 12 o'clock, and install the screws and washers.

4) Install the first officer's sidewall (TASK 25-11-21-400-801 or TASK 25-11-21-400-805).

LOM 402, 404, 406, 407, 411, 412, 415, 416, 420, 422-434, 437-447, 450-464

SUBTASK 30-41-00-210-014

(10) Examine the position of the first officer's window receptacle connector keyway.

(a) If the first officer's window receptacle connector keyway is not set at the right position, or 3 o'clock, do the steps that follow:

1) Remove the four screws [5] to remove the first officer's window cover.

2) Remove the four screws [3] and four washers [2] at the window receptacle connector.

3) Turn the window receptacle connector keyway to the right position, or 3 o'clock, and install the screws and washers.

4) Install the first officer's window cover.

LOM 465-999

SUBTASK 30-41-00-210-015

(11) Examine the position of the first officer's window receptacle connector keyway.

(a) If the first officer's window receptacle connector keyway is not set at the up position, or 12 o'clock, do the steps that follow:

1) Remove the four screws [5] to remove the first officer's window cover.

2) Remove the four screws [3] and four washers [2] at the window receptacle connector.

3) Turn the window receptacle connector keyway to the up position, or 12 o'clock, and install the screws and washers.

ECCN 9E991 BOEING PROPRIETARY - See title page for details

LOM 465-999 (Continued)

4) Install the first officer's window cover.

LOM ALL

SUBTASK 30-41-00-210-006

(12) Examine the first officer's coil cord for signs of rub damage at the connector ends.

(a) Do this task: General Visual Inspection of EWIS, TASK 20-60-04-100-801.

LOM 402, 404, 406, 407, 411, 412, 415, 416, 420, 422-434, 437-447, 450-464

SUBTASK 30-41-00-420-002

(13) Install the coil cord on the first officer's side of the flight compartment.

NOTE: The cord is reversible.

(a) Use best fit for left or right installation.

LOM 465-999

SUBTASK 30-41-00-420-004

(14) Install the coil cord on the first officer's side of the flight compartment.

NOTE: The cord is nonreversible.

(a) Make sure that the window side connector has 5 pins.

(b) Make sure that the sidewall side connector has 6 pins.

LOM ALL

F. Put the Airplane Back to its Normal Condition

SUBTASK 30-41-00-860-015

(1) Remove the safety tags and close these circuit breakers:

CAPT Electrical System Panel, P18-3

Row	Col	Number	Name
LOM 402, 404, 406, 407, 411, 412, 415, 416, 420, 422-434, 437-447, 450-464			
D	2	C00225	WINDOW HEAT CONTROL LEFT SIDE AC
E	2	C00227	WINDOW HEAT CONTROL RIGHT SIDE AC

F/O Electrical System Panel, P6-11

Row	Col	Number	Name
LOM ALL			
B	8	C00393	WINDOW HEAT POWER RIGHT SIDE

F/O Electrical System Panel, P6-12

Row	Col	Number	Name
B	9	C00392	WINDOW HEAT POWER LEFT SIDE

SUBTASK 30-41-00-710-002

(2) Do this task: Window Heat System - Operational Test, TASK 30-41-00-710-801.

END OF TASK

ECCN 9E991 BOEING PROPRIETARY - See title page for details

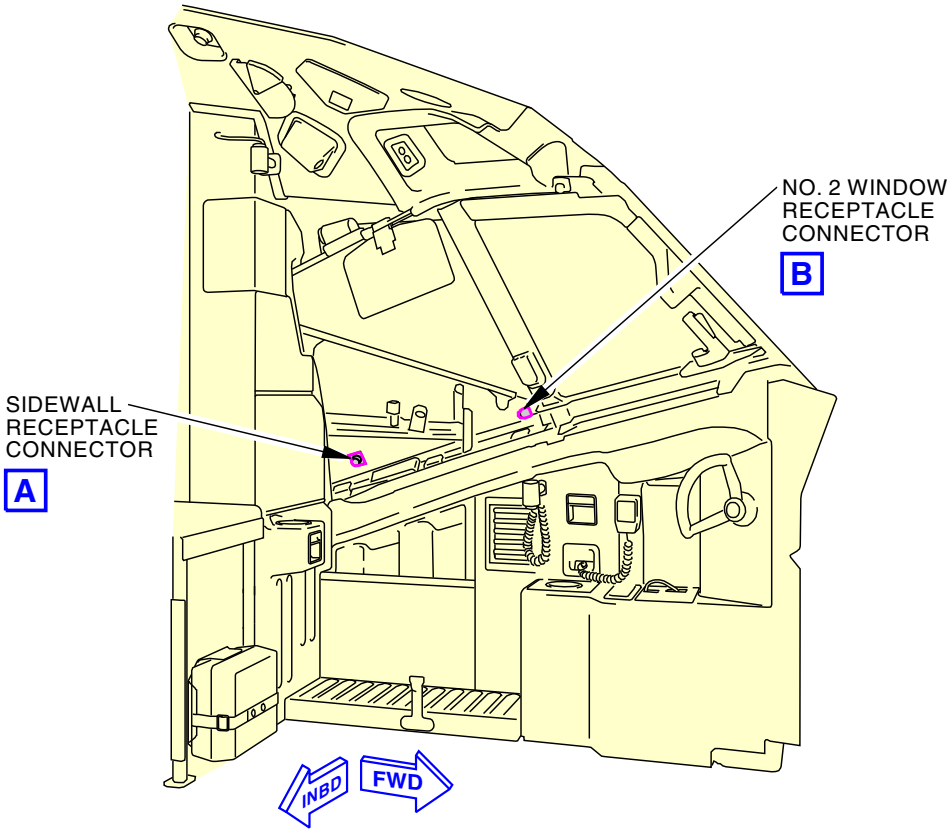

FLIGHT COMPARTMENT CAPTAIN'S SIDEWALL
(FIRST OFFICER'S SIDEWALL IS OPPOSITE)

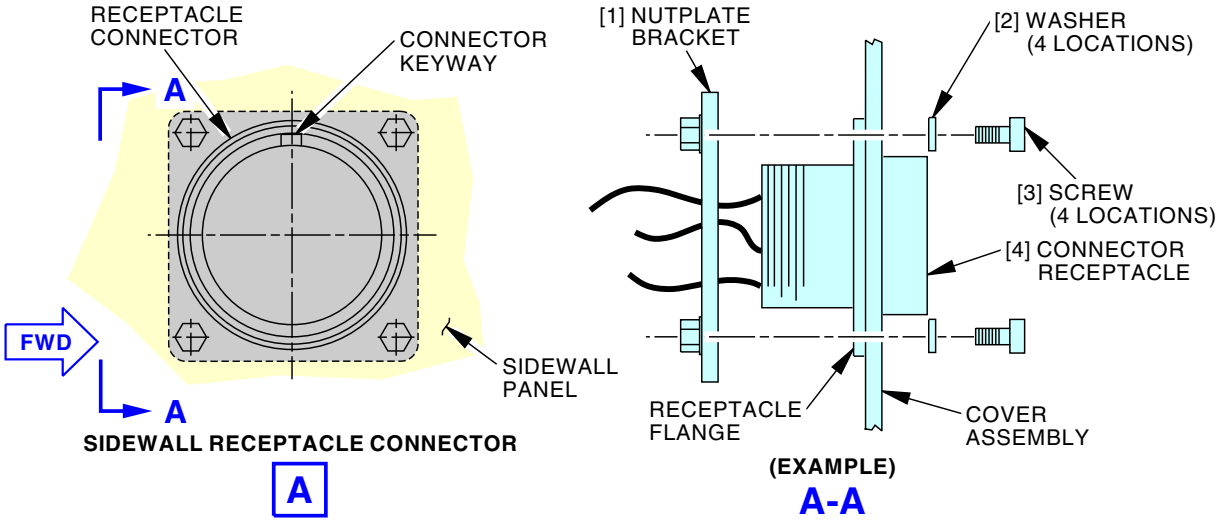

SIDEWALL RECEPTACLE CONNECTOR

A

(EXAMPLE)

A-A

2158219 S0000473556_V3

Coil Cord Keyway Position Inspection
Figure 601/30-41-00-990-802 (Sheet 1 of 3)

ECCN 9E991 BOEING PROPRIETARY - See title page for details

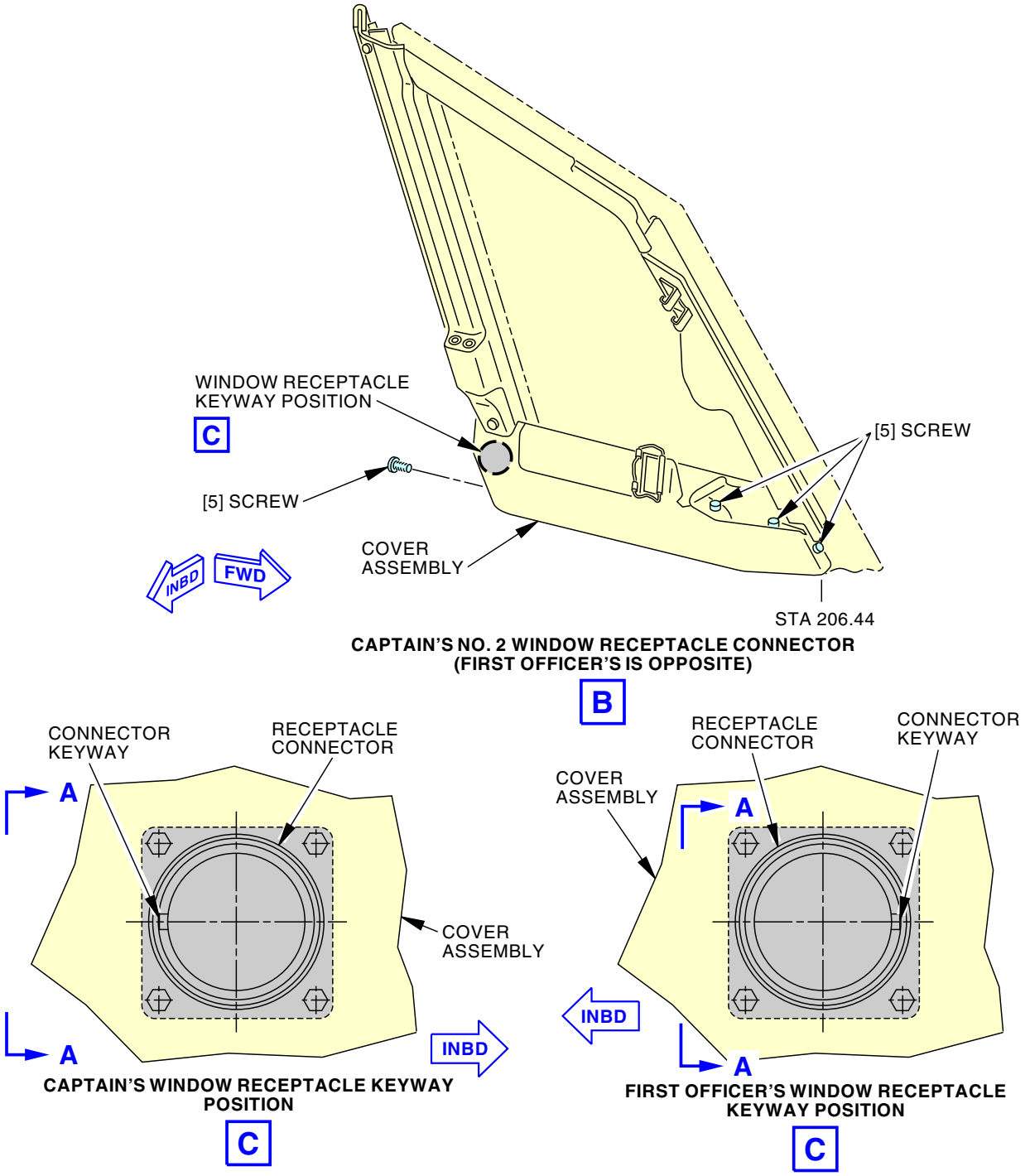

Coil Cord Keyway Position Inspection
Figure 601/30-41-00-990-802 (Sheet 2 of 3)

ECCN 9E991 BOEING PROPRIETARY - See title page for details

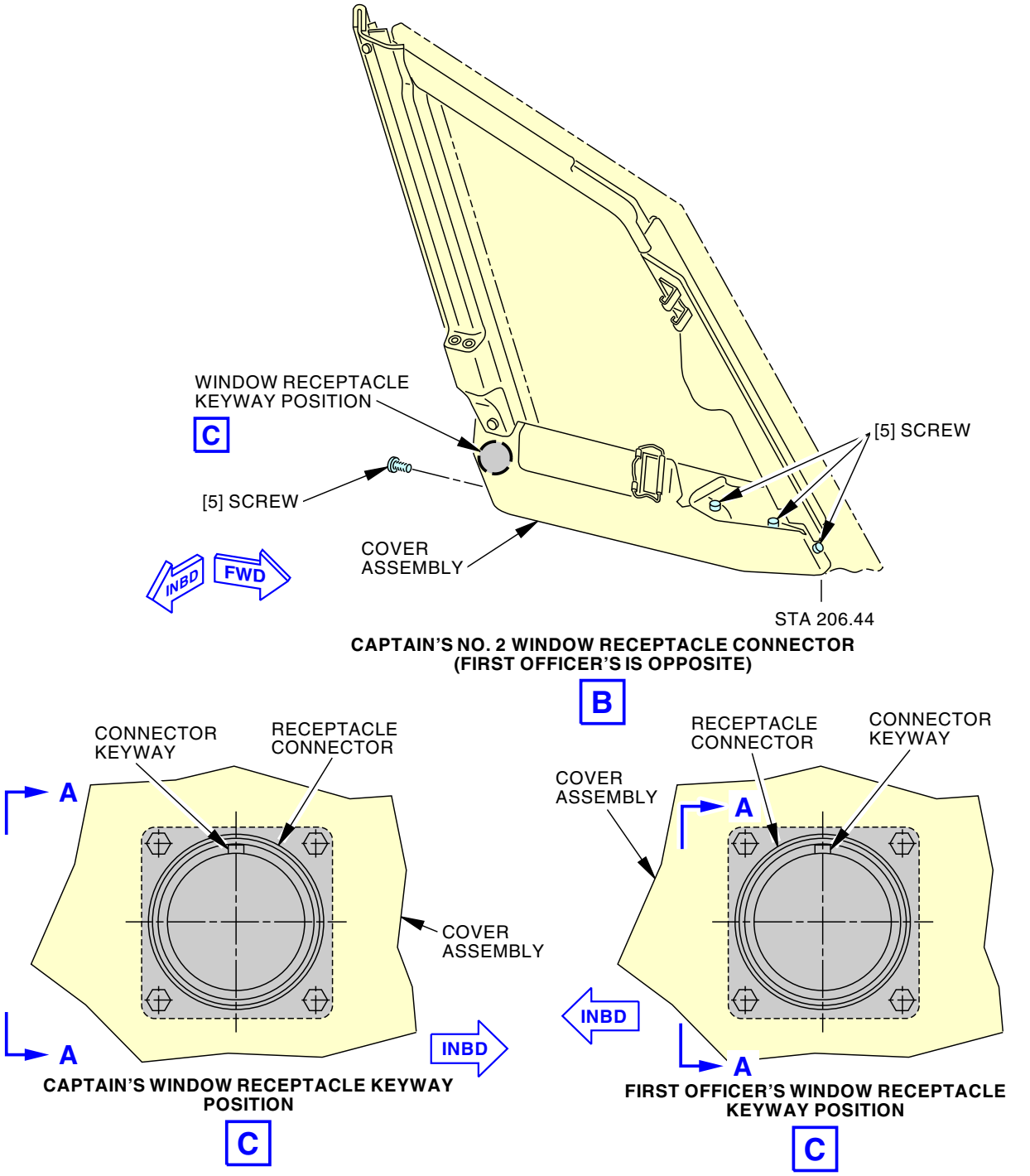

Coil Cord Keyway Position Inspection
Figure 601/30-41-00-990-802 (Sheet 3 of 3)

ECCN 9E991 BOEING PROPRIETARY - See title page for details

CONTROL CABIN WINDOW ANTI-ICING SYSTEM - REPAIRS

1. General

A. This procedure connects the spare window temperature sensor.

B. The captain's and first officer's No. 1 and No. 2 windows are electrically heated. Each window has a control (primary) and a spare temperature sensor.

C. This procedure gives the steps necessary to disconnect the bad control (primary) temperature sensor and connect the spare temperature sensor.

D. It is optional to replace the window after a primary temperature sensor failure.

E. It is necessary to replace the window if none of the temperature sensors operate.

TASK 30-41-00-420-801

2. Control Cabin Window Temperature Sensor - Repairs

(Figure 801)

A. General

(1) This task includes the steps to select a serviceable control cabin window temperature sensor.

(2) The OVERRIDE mode is an optional Window Heat Control Unit (WHCU) configuration to automatically select a serviceable sensor.

B. References

Reference	Title
30-41-11-440-801	Window Heat Control Unit (WHCU) Override Mode Activation/Deactivation (P/B 201)
56-11-11-000-801	No. 1 Window Removal (P/B 401)
56-12-11-000-801	No. 2 Openable Window Removal (P/B 401)
56-12-11-400-801	No. 2 Openable Window Installation (P/B 401)

C. Consumable Materials

Reference	Description	Specification
D50244	Compound - Dow Corning 340 Heat Sink Compound	
G01659	Swab - Cotton Or Rayon, (Disposable)	

D. Location Zones

Zone	Area
211	Flight Compartment - Left
212	Flight Compartment - Right

E. Access Panels

Number	Name/Location
117A	Electronic Equipment Access Door

F. Prepare for the Repairs

SUBTASK 30-41-00-000-001

(1) Open these circuit breakers and install safety tags:

CAPT Electrical System Panel, P18-3

Row	Col	Number	Name

LOM 402, 404, 406, 407, 411, 412, 415, 416, 420, 422-434, 437-447, 450-464

ECCN 9E991 BOEING PROPRIETARY - See title page for details

LOM 402, 404, 406, 407, 411, 412, 415, 416, 420, 422-434, 437-447, 450-464 (Continued)

(Continued)

CAPT Electrical System Panel, P18-3

Row	Col	Number	Name
D	2	C00225	WINDOW HEAT CONTROL LEFT SIDE AC
E	2	C00227	WINDOW HEAT CONTROL RIGHT SIDE AC

F/O Electrical System Panel, P6-11

Row	Col	Number	Name
LOM ALL			
B	8	C00393	WINDOW HEAT POWER RIGHT SIDE
B	9	C00228	WINDOW HEAT POWER LEFT FRONT

F/O Electrical System Panel, P6-12

Row	Col	Number	Name
B	8	C00394	WINDOW HEAT POWER RIGHT FRONT
B	9	C00392	WINDOW HEAT POWER LEFT SIDE

G. Control Cabin Window Temperature Sensor Repairs

LOM 402, 404, 406, 407, 411, 412, 415, 416, 420, 422-434, 437-447, 450-464

SUBTASK 30-41-00-440-001

(1) For No. 1 window, select the spare sensor:

(a) Open this access panel:

Number	Name/Location
117A	Electronic Equipment Access Door

(b) Set the applicable WNDSHLD SNSR switch or switches in the spare position.

LOM 465-999

SUBTASK 30-41-00-440-002

(2) For No. 1 window, select the spare sensor:

NOTE: It is necessary to cycle the WINDOW HEAT switch to select the other window heat sensor.

(a) Set the applicable WINDOW HEAT switch, on the P5-9 panel, to the OFF position.

(b) Set the applicable WINDOW HEAT switch, on the P5-9 panel, to the ON position.

SUBTASK 30-41-00-440-003

(3) For the No. 1 window, if it is necessary, start the OVERRIDE mode.

NOTE: In the OVERRIDE mode, the WHCU will automatically select the serviceable sensor. It will not be necessary to cycle the WINDOW HEAT power switch when a heat sensor becomes defective.

(a) Start the OVERRIDE mode for No. 1 window (TASK 30-41-11-440-801).

(b) If the OVERHEAT light comes on, disconnect the wires connected to the defective sensor (TASK 56-11-11-000-801).

ECCN 9E991 BOEING PROPRIETARY - See title page for details

LOM 432, 466-999; LOM 402, 404, 406, 407, 411, 412, 415, 416, 420, 422-431, 433, 434, 437-447, 450-465 PRE SB 737-30-1078; AIRPLANES WITHOUT QUICK DISCONNECT PLUGS

SUBTASK 30-41-00-900-001

(4) For the No. 2 window, change the wires from the primary sensor to the spare sensor:

(a) Disconnect the coil cord that is attached to the side window.

(b) If it is necessary, remove the side window (TASK 56-12-11-000-801).

(c) Disconnect the wire connected to the primary sensor's D terminal located at the bottom corner of the window.

(d) Connect the wire to the spare temperature sensor's D terminal.

(e) Apply a layer of Dow Corning 340 heat sink compound, D50244, to the terminals with swab, G01659.

NOTE: Dow Corning 340 heat sink compound, D50244, decreases the insulation loss between the sensor terminals and metal frame of the window. If not done, this can cause the window to become too hot.

(f) If removed, install the side window (TASK 56-12-11-400-801).

(g) Connect the coil cord to the side window.

LOM 402, 404, 406, 407, 411, 412, 415, 416, 420, 422-431, 433, 434, 437-447, 450-465 POST SB 737-30-1078; AIRPLANES WITH QUICK DISCONNECT PLUGS

SUBTASK 30-41-00-900-002

(5) For the No. 2 left (right) window, change the wires from the primary sensor to the spare sensor:

(a) Disconnect the coil cord that is attached to the side window.

(b) Remove the quick disconnect plugs from the channel.

(c) Disconnect the quick disconnect plug D7701P (D7702P) from the primary sensor quick disconnect receptacle D7701J (D7702J).

(d) Remove the cap from the spare sensor quick disconnect plug D7703 (D7704).

(e) Connect the spare sensor quick disconnect plug D7703 (D7704) to the quick disconnect plug D7701P (D7702P).

(f) Install a cap on the primary sensor quick disconnect receptacle D7701J (D7702J).

(g) Stow the quick disconnect plugs in the channel.

(h) Connect the coil cord to the side window.

LOM 465 POST SB 737-30-1078; AIRPLANES WITH QUICK DISCONNECT PLUGS AND DUAL SENSOR OPERATION

SUBTASK 30-41-00-420-006

(6) If the No. 2 left (right) window spare sensor is not connected and dual sensor operation is preferred, do these steps:

(a) Make sure that WHCU 1 (2) connector D16230 (D16232) program pin 5 is grounded.

(b) Disconnect the coil cord that is attached to the side window.

(c) Remove the quick disconnect plugs from the channel.

(d) Remove the cap from the spare sensor quick disconnect connector plug D7703 (D7704).

(e) Remove the cap from the spare sensor quick disconnect connector receptacle D7705 (D7706).

(f) Connect the spare sensor quick disconnect connector plug D7703 (D7704) to the quick disconnect connector receptacle D7705 (D7706).

ECCN 9E991 BOEING PROPRIETARY - See title page for details

LOM 465 POST SB 737-30-1078; AIRPLANES WITH QUICK DISCONNECT PLUGS AND DUAL SENSOR OPERATION (Continued)

(g) Stow the quick disconnect connectors in the channel.

(h) Connect the coil cord to the side window.

LOM 465-999; Airplanes with the dual sensor operation (WHCU program pin P1-5 is grounded)

SUBTASK 30-41-00-440-004

(7) For the No. 2 window, if it is necessary, start the OVERRIDE mode.

NOTE: In the OVERRIDE mode, the WHCU will automatically select the serviceable sensor. It will not be necessary to cycle the WINDOW HEAT power switch when a heat sensor becomes defective.

(a) Start the OVERRIDE mode for No. 2 window (TASK 30-41-11-440-801).

(b) If the OVERHEAT light comes on, disconnect the wires connected to the defective sensor (TASK 56-12-11-000-801).

LOM ALL

SUBTASK 30-41-00-840-003

(8) Remove the safety tags and close these circuit breakers:

CAPT Electrical System Panel, P18-3

Row	Col	Number	Name
LOM 402, 404, 406, 407, 411, 412, 415, 416, 420, 422-434, 437-447, 450-464			
D	2	C00225	WINDOW HEAT CONTROL LEFT SIDE AC
E	2	C00227	WINDOW HEAT CONTROL RIGHT SIDE AC

F/O Electrical System Panel, P6-11

Row	Col	Number	Name
LOM ALL			
B	8	C00393	WINDOW HEAT POWER RIGHT SIDE
B	9	C00228	WINDOW HEAT POWER LEFT FRONT

F/O Electrical System Panel, P6-12

Row	Col	Number	Name
B	8	C00394	WINDOW HEAT POWER RIGHT FRONT
B	9	C00392	WINDOW HEAT POWER LEFT SIDE

SUBTASK 30-41-00-710-001

(9) Do a test on the temperature control sensor connections:

(a) Push the BIT VERIFY switch on the window heat control unit.

(b) Make sure that the green light comes on.

LOM 402, 404, 406, 407, 411, 412, 415, 416, 420, 422-434, 437-447, 450-464

H. Put the Airplane Back to Its Usual Condition

SUBTASK 30-41-00-410-003

(1) Close this access panel as necessary:

Number	Name/Location
117A	Electronic Equipment Access Door

ECCN 9E991 BOEING PROPRIETARY - See title page for details

LOM ALL

END OF TASK

ECCN 9E991 BOEING PROPRIETARY - See title page for details

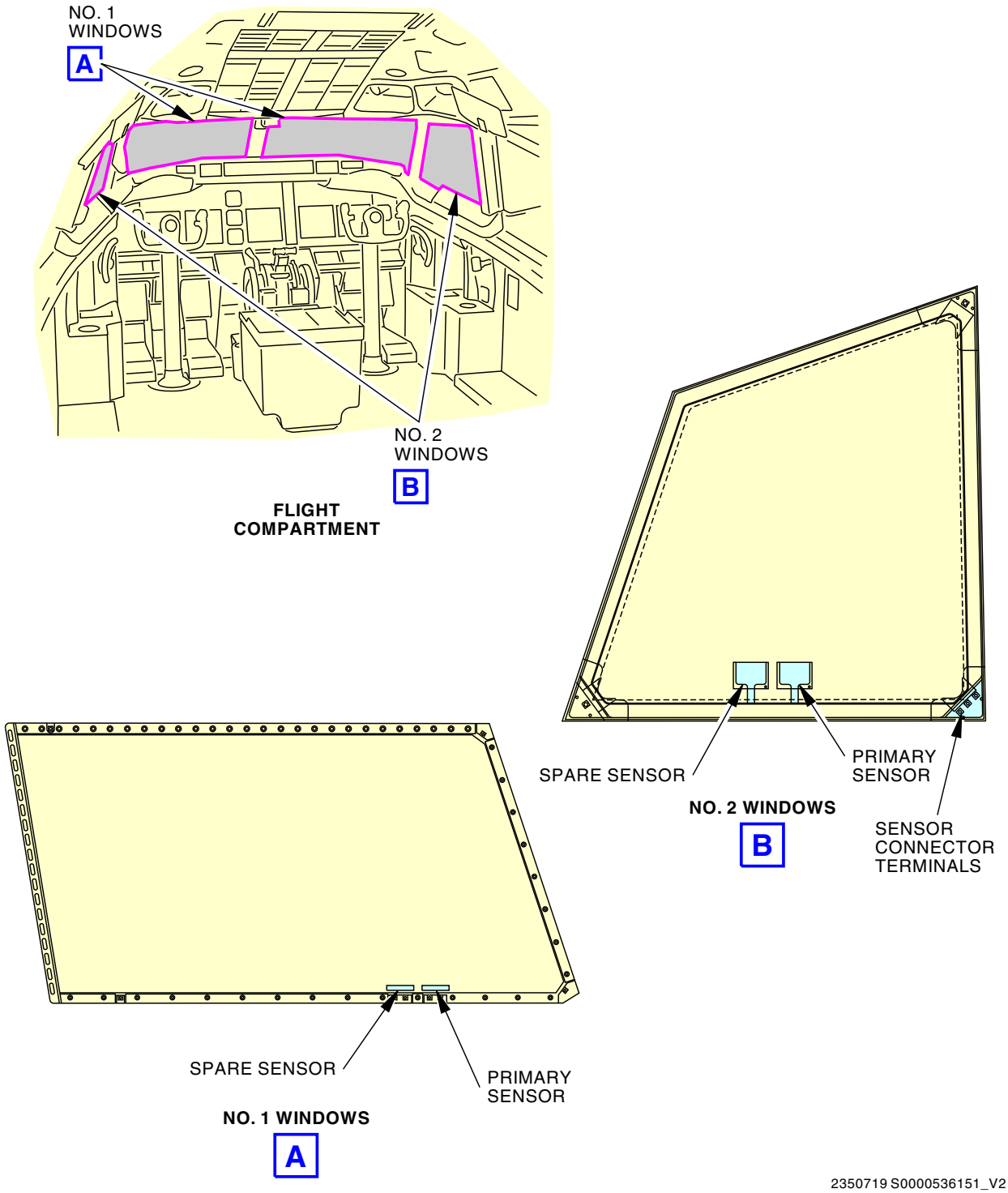

2350719 S0000536151_V2

Flight Compartment Window Temperature Sensor Connections
Figure 801/30-41-00-990-803

ECCN 9E991 BOEING PROPRIETARY - See title page for details

WINDOW HEAT CONTROL UNIT - MAINTENANCE PRACTICES

1. General

A. This procedure contains this task:

(1) Window Heat Control Unit (WHCU) Override Mode Activation/Deactivation.

NOTE: The OVERRIDE mode is not enabled from the factory and can be enabled by Window Heat Control Unit (WHCU) Override Mode Activation/Deactivation, TASK 30-41-11-440-801. The using of the OVERRIDE mode is available as a customer convenience, and is an optional action.

TASK 30-41-11-440-801

2. Window Heat Control Unit (WHCU) Override Mode Activation/Deactivation

A. General

(1) This task includes the steps to activate/deactivate the OVERRIDE mode on the Window Heat Control Unit (WHCU).

(2) The WHCU 1 is on the E2-1 rack and supplies power for the No. 1 left and No. 2 right windows.

(3) The WHCU 2 is on the E4-2 rack and supplies power for the No. 1 right and No. 2 left windows.

(4) In the OVERRIDE mode, the OVERHEAT lights will come on when the two window heat sensors become defective.

B. Location Zones

Zone	Area
117	Electrical and Electronics Compartment - Left
118	Electrical and Electronics Compartment - Right
211	Flight Compartment - Left
212	Flight Compartment - Right

C. Access Panels

Number	Name/Location
117A	Electronic Equipment Access Door

D. Prepare for the Activation/Deactivation

SUBTASK 30-41-11-860-036

(1) Make sure that these circuit breakers are closed:

F/O Electrical System Panel, P6-11

Row	Col	Number	Name
B	8	C00393	WINDOW HEAT POWER RIGHT SIDE
B	9	C00228	WINDOW HEAT POWER LEFT FRONT

F/O Electrical System Panel, P6-12

Row	Col	Number	Name
B	8	C00394	WINDOW HEAT POWER RIGHT FRONT
B	9	C00392	WINDOW HEAT POWER LEFT SIDE

SUBTASK 30-41-11-860-025

(2) To get access to the electronic equipment center, do this step:

ECCN 9E991 BOEING PROPRIETARY - See title page for details

(a) Open this access panel:

Number	Name/Location
117A	Electronic Equipment Access Door

E. OVERRIDE Mode Activation/Deactivation for No. 1 Window

SUBTASK 30-41-11-860-026

(1) Activate/deactivate the OVERRIDE mode for the No. 1 window:

(a) Set the applicable WINDOW HEAT switch, on the P5-9 panel, to the OFF position.

(b) Set the applicable WINDOW HEAT switch, on the P5-9 panel, to the ON position.

(c) For the No. 1 left window:

1) Push and hold the LAMP TEST and BIT VERIFY buttons on the WHCU 1 for 5 seconds.

(d) For the No. 1 right window:

1) Push and hold the LAMP TEST and BIT VERIFY buttons on the WHCU 2 for 5 seconds.

(e) For activation, make sure that the #1 WINDOW green OVERRIDE MODE light comes on.

(f) For deactivation, make sure that the #1 WINDOW green OVERRIDE MODE light goes off.

(g) Set the applicable WINDOW HEAT switch, on the P5-9 panel, to the OFF position.

LOM 465-999; Airplanes with the dual sensor operation (WHCU program pin P1-5 is grounded)

F. OVERRIDE Mode Activation/Deactivation for No. 2 Window

NOTE: The No. 2 window dual sensor configuration and OVERRIDE mode is available only for airplanes with the two WHCU configuration with part number 83000-2790X. To use dual sensor configuration on the No. 2 window, the WHCU program pin (P1-5) should be grounded and the two window sensors should be connected.

SUBTASK 30-41-11-860-031

(1) Activate/deactivate the OVERRIDE mode for the No. 2 window:

(a) Set the applicable WINDOW HEAT switch, on the P5-9 panel, to the OFF position.

(b) Set the applicable WINDOW HEAT switch, on the P5-9 panel, to the ON position.

(c) For the No. 2 left window:

1) Push and hold the FAULT HISTORY and BIT LAMP RESET buttons on the WHCU 2 for 5 seconds.

(d) For the No. 2 right window:

1) Push and hold the FAULT HISTORY and BIT LAMP RESET buttons on the WHCU 1 for 5 seconds.

(e) For activation, make sure that the #2 WINDOW green OVERRIDE MODE light comes on.

(f) For deactivation, make sure that the #2 WINDOW green OVERRIDE MODE light goes off.

(g) Set the applicable WINDOW HEAT switch, on the P5-9 panel, to the OFF position.

LOM 465-999

ECCN 9E991 BOEING PROPRIETARY - See title page for details

G. Put the Airplane Back to Its Usual Condition

SUBTASK 30-41-11-860-028

(1) Close this access panel:

Number	Name/Location
117A	Electronic Equipment Access Door

——— END OF TASK ———

ECCN 9E991 BOEING PROPRIETARY - See title page for details

WINDOW HEAT CONTROL UNIT - REMOVAL/INSTALLATION

1. General

A. This procedure contains scheduled maintenance task data.

B. This Procedure has these tasks:

(1) Removal of the window heat control unit.

(2) Installation of the window heat control unit.

(3) Thermal Switch Removal.

(4) Thermal Switch Installation.

(5) Replace the Thermal Switch Fairing Compound.

LOM 402, 404, 406, 407, 411, 412, 415, 416, 420, 422-434, 437-447, 450-464

TASK 30-41-11-000-801

2. Window Heat Control Unit (WHCU) Removal

(Figure 401)

A. General

(1) This task gives instructions to remove the four WHCUs.

(2) The window heat control units (WHCUs [1]) are installed on the E4-2 and E2-1 racks in the main equipment center.

B. References

Reference	Title
20-10-07-000-801	E/E Box Removal (P/B 201)
20-40-12-000-802	ESDS Handling for Metal Encased Unit Removal (P/B 201)

C. Location Zones

Zone	Area
117	Electrical and Electronics Compartment - Left
118	Electrical and Electronics Compartment - Right

D. Access Panels

Number	Name/Location
117A	Electronic Equipment Access Door

E. Prepare for the Removal

SUBTASK 30-41-11-010-001

(1) To get access to the Main Equipment Center, do this step:

Open this access panel:

Number	Name/Location
117A	Electronic Equipment Access Door

SUBTASK 30-41-11-860-011

(2) Open these circuit breakers and install safety tags:

CAPT Electrical System Panel, P18-3

Row	Col	Number	Name
D	1	C00226	WINDOW HEAT CONTROL RIGHT FRONT AC
D	2	C00225	WINDOW HEAT CONTROL LEFT SIDE AC

ECCN 9E991 BOEING PROPRIETARY - See title page for details

LOM 402, 404, 406, 407, 411, 412, 415, 416, 420, 422-434, 437-447, 450-464 (Continued)

(Continued)

CAPT Electrical System Panel, P18-3

Row	Col	Number	Name
E	1	C00224	WINDOW HEAT CONTROL LEFT FRONT AC
E	2	C00227	WINDOW HEAT CONTROL RIGHT SIDE AC

F/O Electrical System Panel, P6-11

Row	Col	Number	Name
LOM 404, 411, 412, 415, 423, 424, 427, 428, 439, 441, 464			
B	7	C01650	WINDOW HEAT POWER L3
LOM 402			
B	7	C00229	WINDOW HEAT POWER L3, L4 & L5
LOM 402, 404, 406, 407, 411, 412, 415, 416, 420, 422-434, 437-447, 450-464			
B	8	C00393	WINDOW HEAT POWER RIGHT SIDE
B	9	C00228	WINDOW HEAT POWER LEFT FRONT

F/O Electrical System Panel, P6-12

Row	Col	Number	Name
LOM 404, 411, 412, 415, 423, 424, 427, 428, 439, 441, 464			
B	7	C01649	WINDOW HEAT POWER R3
LOM 402			
B	7	C00395	WINDOW HEAT POWER R3, R4 & R5
LOM 402, 404, 406, 407, 411, 412, 415, 416, 420, 422-434, 437-447, 450-464			
B	8	C00394	WINDOW HEAT POWER RIGHT FRONT
B	9	C00392	WINDOW HEAT POWER LEFT SIDE

These circuit breakers are inoperative and should remain open:

F/O Electrical System Panel, P6-11

Row	Col	Number	Name
LOM 402 POST SB 737-56-1017			
B	7	C00229	WINDOW HEAT POWER L4 & L5 (INOP)

F/O Electrical System Panel, P6-12

Row	Col	Number	Name
B	7	C00395	WINDOW HEAT POWER R4 & R5 (INOP)

LOM 402, 404, 406, 407, 411, 412, 415, 416, 420, 422-434, 437-447, 450-464

F. WHCU Removal

SUBTASK 30-41-11-840-001

CAUTION

DO NOT TOUCH THE WINDOW HEAT CONTROL UNIT BEFORE YOU DO THE PROCEDURE FOR DEVICES THAT ARE SENSITIVE TO ELECTROSTATIC DISCHARGE. ELECTROSTATIC DISCHARGE CAN CAUSE DAMAGE TO THE WINDOW HEAT CONTROL UNIT.

(1) To handle the WHCU [1], do this task: ESDS Handling for Metal Encased Unit Removal, TASK 20-40-12-000-802.

ECCN 9E991 BOEING PROPRIETARY - See title page for details

SUBTASK 30-41-11-020-001

(2) To remove the WHCU [1] from the shelf, do this task: E/E Box Removal, TASK 20-10-07-000-801.

END OF TASK

ECCN 9E991 BOEING PROPRIETARY - See title page for details

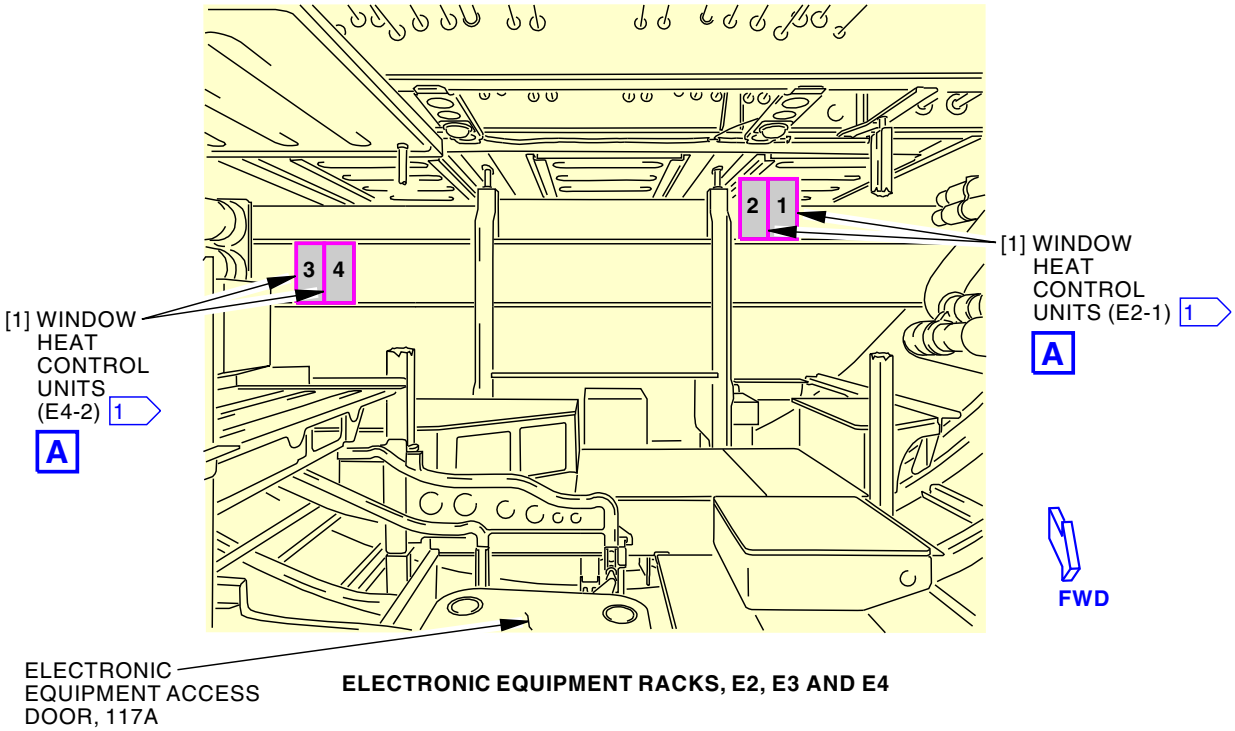

ELECTRONIC EQUIPMENT RACKS, E2, E3 AND E4

1

UNIT	ELECTRICAL EQUIPMENT NO.	WINDOW
1	M320	R SIDE
2	M321	L FWD
3	M322	L SIDE
4	M323	R FWD

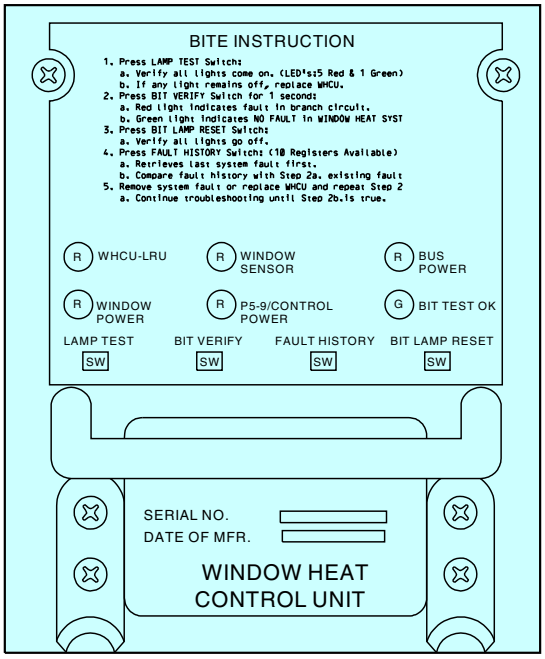

A

G79821 S0006573141_V3

Window Heat Control Unit Installation
Figure 401/30-41-11-990-802

ECCN 9E991 BOEING PROPRIETARY - See title page for details

TASK 30-41-11-400-801

3. **Window Heat Control Unit (WHCU) Installation**
(Figure 401)

A. **General**

(1) This task gives instructions to install the WHCUs.

B. **References**

Reference	Title
20-10-07-400-801	E/E Box Installation (P/B 201)
20-40-12-400-802	ESDS Handling for Metal Encased Unit Installation (P/B 201)

C. **Expendables/Parts**

AMM Item	Description	AIPC Reference	AIPC Effectivity
1	WHCU	30-41-11-02-005	LOM 402, 404, 406, 407, 411, 412, 415, 416, 420, 422-434, 437-447, 450-464
		30-41-11-03-005	LOM 402, 404, 406, 407, 411, 412, 415, 416, 420, 422-434, 437-447, 450-464

D. **Location Zones**

Zone	Area
117	Electrical and Electronics Compartment - Left
118	Electrical and Electronics Compartment - Right

E. **Access Panels**

Number	Name/Location
117A	Electronic Equipment Access Door

F. **WHCU Installation**

SUBTASK 30-41-11-860-012

(1) Make sure that these circuit breakers are open and have safety tags:

CAPT Electrical System Panel, P18-3

Row	Col	Number	Name
D	1	C00226	WINDOW HEAT CONTROL RIGHT FRONT AC
D	2	C00225	WINDOW HEAT CONTROL LEFT SIDE AC
E	1	C00224	WINDOW HEAT CONTROL LEFT FRONT AC
E	2	C00227	WINDOW HEAT CONTROL RIGHT SIDE AC

F/O Electrical System Panel, P6-11

Row	Col	Number	Name
LOM 404, 411, 412, 415, 423, 424, 427, 428, 439, 441, 464			
B	7	C01650	WINDOW HEAT POWER L3
LOM 402			
B	7	C00229	WINDOW HEAT POWER L3, L4 & L5

ECCN 9E991 BOEING PROPRIETARY - See title page for details

LOM 402 (Continued)

(Continued)

F/O Electrical System Panel, P6-11

Row	Col	Number	Name
LOM 402, 404, 406, 407, 411, 412, 415, 416, 420, 422-434, 437-447, 450-464			
B	8	C00393	WINDOW HEAT POWER RIGHT SIDE
B	9	C00228	WINDOW HEAT POWER LEFT FRONT

F/O Electrical System Panel, P6-12

Row	Col	Number	Name
LOM 404, 411, 412, 415, 423, 424, 427, 428, 439, 441, 464			
B	7	C01649	WINDOW HEAT POWER R3
LOM 402			
B	7	C00395	WINDOW HEAT POWER R3, R4 & R5
LOM 402, 404, 406, 407, 411, 412, 415, 416, 420, 422-434, 437-447, 450-464			
B	8	C00394	WINDOW HEAT POWER RIGHT FRONT
B	9	C00392	WINDOW HEAT POWER LEFT SIDE

These circuit breakers are inoperative and should remain open:

F/O Electrical System Panel, P6-11

Row	Col	Number	Name
LOM 402 POST SB 737-56-1017			
B	7	C00229	WINDOW HEAT POWER L4 & L5 (INOP)

F/O Electrical System Panel, P6-12

Row	Col	Number	Name
B	7	C00395	WINDOW HEAT POWER R4 & R5 (INOP)

LOM 402, 404, 406, 407, 411, 412, 415, 416, 420, 422-434, 437-447, 450-464

SUBTASK 30-41-11-840-002

CAUTION	DO NOT TOUCH THE CONTROL UNIT BEFORE YOU DO THE PROCEDURE FOR DEVICES THAT ARE SENSITIVE TO ELECTROSTATIC DISCHARGE. ELECTROSTATIC DISCHARGE CAN CAUSE DAMAGE TO THE CONTROL UNIT.

(2) To handle the WHCU [1], do this task: ESDS Handling for Metal Encased Unit Installation, TASK 20-40-12-400-802.

SUBTASK 30-41-11-420-001

(3) To install the WHCU [1] on the shelf, do this task: E/E Box Installation, TASK 20-10-07-400-801.

G. WHCU Installation Test

SUBTASK 30-41-11-860-013

(1) Remove the safety tags and close these circuit breakers:

CAPT Electrical System Panel, P18-3

Row	Col	Number	Name
D	1	C00226	WINDOW HEAT CONTROL RIGHT FRONT AC

ECCN 9E991 BOEING PROPRIETARY - See title page for details

LOM 402, 404, 406, 407, 411, 412, 415, 416, 420, 422-434, 437-447, 450-464 (Continued)

(Continued)

CAPT Electrical System Panel, P18-3

Row	Col	Number	Name
D	2	C00225	WINDOW HEAT CONTROL LEFT SIDE AC
E	1	C00224	WINDOW HEAT CONTROL LEFT FRONT AC
E	2	C00227	WINDOW HEAT CONTROL RIGHT SIDE AC

F/O Electrical System Panel, P6-11

Row	Col	Number	Name
LOM 404, 411, 412, 415, 423, 424, 427, 428, 439, 441, 464			
B	7	C01650	WINDOW HEAT POWER L3
LOM 402			
B	7	C00229	WINDOW HEAT POWER L3, L4 & L5
LOM 402, 404, 406, 407, 411, 412, 415, 416, 420, 422-434, 437-447, 450-464			
B	8	C00393	WINDOW HEAT POWER RIGHT SIDE
B	9	C00228	WINDOW HEAT POWER LEFT FRONT

F/O Electrical System Panel, P6-12

Row	Col	Number	Name
LOM 404, 411, 412, 415, 423, 424, 427, 428, 439, 441, 464			
B	7	C01649	WINDOW HEAT POWER R3
LOM 402			
B	7	C00395	WINDOW HEAT POWER R3, R4 & R5
LOM 402, 404, 406, 407, 411, 412, 415, 416, 420, 422-434, 437-447, 450-464			
B	8	C00394	WINDOW HEAT POWER RIGHT FRONT
B	9	C00392	WINDOW HEAT POWER LEFT SIDE

These circuit breakers are inoperative and should remain open:

F/O Electrical System Panel, P6-11

Row	Col	Number	Name
LOM 402 POST SB 737-56-1017			
B	7	C00229	WINDOW HEAT POWER L4 & L5 (INOP)

F/O Electrical System Panel, P6-12

Row	Col	Number	Name
B	7	C00395	WINDOW HEAT POWER R4 & R5 (INOP)

LOM 402, 404, 406, 407, 411, 412, 415, 416, 420, 422-434, 437-447, 450-464

SUBTASK 30-41-11-740-004

(2) Do this test on the WHCU [1] BITE.

(a) Set the WINDOW HEAT switches, on the P5 overhead panel, to the ON position.

(b) Press the LAMP TEST switch.

1) Make sure that all lights (5 red, 1 green) on the face come on.

2) If any light stays off, replace the unit.

(c) Press the BIT VERIFY switch for 1 second.

ECCN 9E991 BOEING PROPRIETARY - See title page for details

1) Make sure that the green light comes on.

(d) Set the WINDOW HEAT switches, on the P5 overhead panel, to the OFF position.

H. Put the Airplane back to Its Usual Condition.

SUBTASK 30-41-11-410-001

(1) Close this access panel:

Number	Name/Location
117A	Electronic Equipment Access Door

——— END OF TASK ———

LOM 465-999

TASK 30-41-11-000-803

4. Window Heat Control Unit (WHCU) Removal

(Figure 402)

A. General

(1) This task gives instructions to remove the two WHCUs.

(2) The window heat control units (WHCUs [1]) are installed on the E4-2 and E2-1 racks in the main equipment center.

B. References

Reference	Title
20-10-07-000-801	E/E Box Removal (P/B 201)
20-40-12-000-802	ESDS Handling for Metal Encased Unit Removal (P/B 201)

C. Location Zones

Zone	Area
117	Electrical and Electronics Compartment - Left
118	Electrical and Electronics Compartment - Right

D. Access Panels

Number	Name/Location
117A	Electronic Equipment Access Door

E. Prepare for the Removal

SUBTASK 30-41-11-010-003

(1) To get access to the Main Equipment Center, do this step:

Open this access panel:

Number	Name/Location
117A	Electronic Equipment Access Door

SUBTASK 30-41-11-860-021

(2) Open these circuit breakers and install safety tags:

F/O Electrical System Panel, P6-11

Row	Col	Number	Name
B	8	C00393	WINDOW HEAT POWER RIGHT SIDE
B	9	C00228	WINDOW HEAT POWER LEFT FRONT

ECCN 9E991 BOEING PROPRIETARY - See title page for details

LOM 465-999 (Continued)

F/O Electrical System Panel, P6-12

Row	Col	Number	Name
B	8	C00394	WINDOW HEAT POWER RIGHT FRONT
B	9	C00392	WINDOW HEAT POWER LEFT SIDE

F. WHCU Removal

SUBTASK 30-41-11-910-001

> **CAUTION**
> DO NOT TOUCH THE UNIT BEFORE YOU DO THE PROCEDURE FOR DEVICES THAT ARE SENSITIVE TO ELECTROSTATIC DISCHARGE. ELECTROSTATIC DISCHARGE CAN CAUSE DAMAGE TO THE UNIT.

(1) To handle the WHCU [1], do this task: ESDS Handling for Metal Encased Unit Removal, TASK 20-40-12-000-802.

SUBTASK 30-41-11-020-002

(2) To remove the WHCU [1] from the shelf, do this task: E/E Box Removal, TASK 20-10-07-000-801.

END OF TASK

ECCN 9E991 BOEING PROPRIETARY - See title page for details

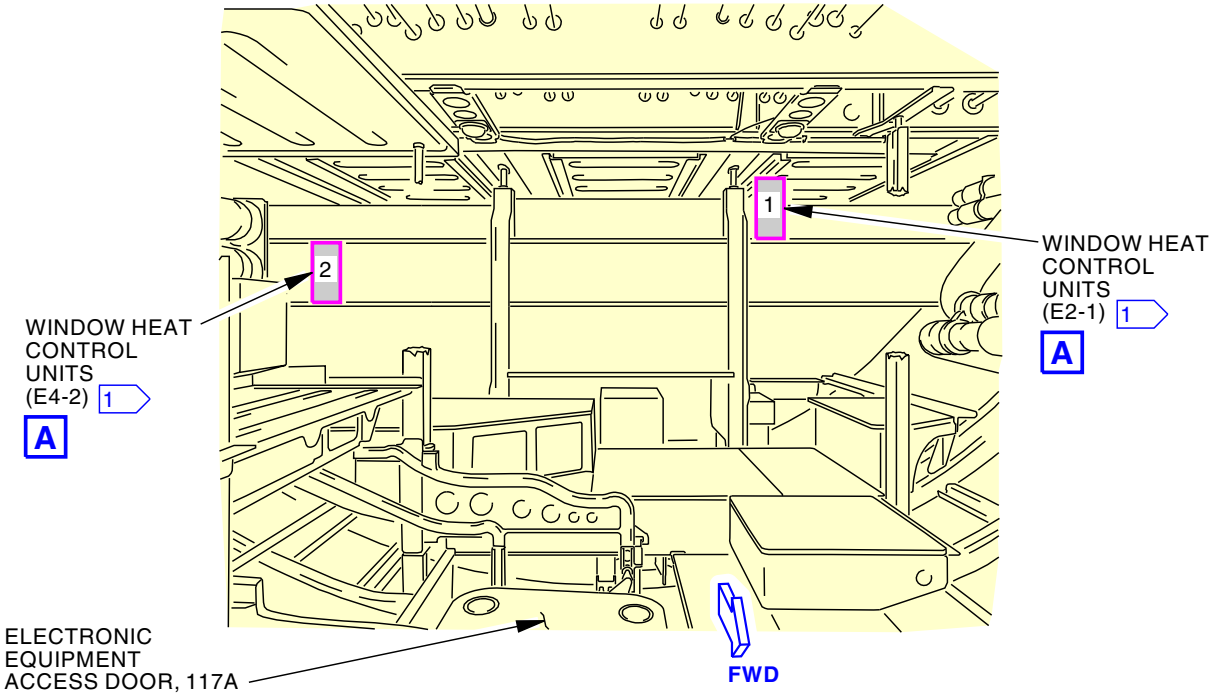

ELECTRONIC EQUIPMENT RACKS, E2 AND E4

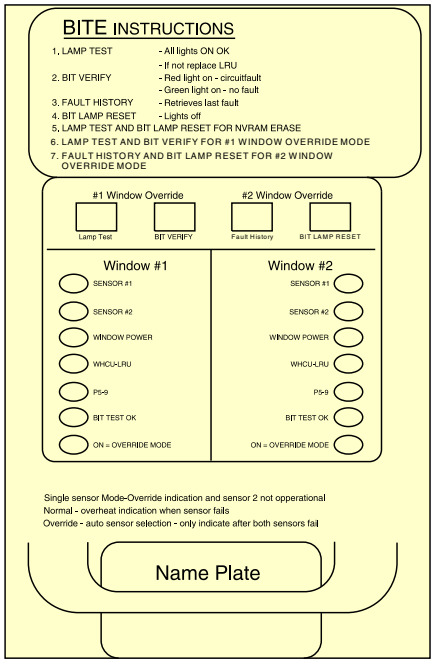

A

2368189 S0000542194_V4

1

UNIT	ELECTRICAL EQUIPMENT NO.	WINDOW
1	M321	L FWD AND R SIDE
2	M323	R FWD AND L SIDE

Window Heat Control Unit Installation
Figure 402/30-41-11-990-805

ECCN 9E991 BOEING PROPRIETARY - See title page for details

TASK 30-41-11-400-803

5. **Window Heat Control Unit (WHCU) Installation**
(Figure 402)

A. **General**

(1) This task gives instructions to install the two WHCUs.

B. **References**

Reference	Title
20-10-07-400-801	E/E Box Installation (P/B 201)
20-40-12-400-802	ESDS Handling for Metal Encased Unit Installation (P/B 201)

C. **Expendables/Parts**

AMM Item	Description	AIPC Reference	AIPC Effectivity
1	WHCU	30-41-11-02-035	LOM 465-999
		30-41-11-03-010	LOM 465-999

D. **Location Zones**

Zone	Area
117	Electrical and Electronics Compartment - Left
118	Electrical and Electronics Compartment - Right

E. **Access Panels**

Number	Name/Location
117A	Electronic Equipment Access Door

F. **WHCU Installation**

SUBTASK 30-41-11-860-022

(1) Make sure that these circuit breakers are open and have safety tags:

F/O Electrical System Panel, P6-11

Row	Col	Number	Name
B	8	C00393	WINDOW HEAT POWER RIGHT SIDE
B	9	C00228	WINDOW HEAT POWER LEFT FRONT

F/O Electrical System Panel, P6-12

Row	Col	Number	Name
B	8	C00394	WINDOW HEAT POWER RIGHT FRONT
B	9	C00392	WINDOW HEAT POWER LEFT SIDE

SUBTASK 30-41-11-910-002

CAUTION

DO NOT TOUCH THE UNIT BEFORE YOU DO THE PROCEDURE FOR DEVICES THAT ARE SENSITIVE TO ELECTROSTATIC DISCHARGE. ELECTROSTATIC DISCHARGE CAN CAUSE DAMAGE TO THE UNIT.

(2) To handle the WHCU [1], do this task: ESDS Handling for Metal Encased Unit Installation, TASK 20-40-12-400-802.

ECCN 9E991 BOEING PROPRIETARY - See title page for details

LOM 465-999 (Continued)

SUBTASK 30-41-11-420-002

(3) To install the WHCU [1] on the shelf, do this task: E/E Box Installation, TASK 20-10-07-400-801.

G. WHCU Installation Test

SUBTASK 30-41-11-860-023

(1) Remove the safety tags and close these circuit breakers:

F/O Electrical System Panel, P6-11

Row	Col	Number	Name
B	8	C00393	WINDOW HEAT POWER RIGHT SIDE
B	9	C00228	WINDOW HEAT POWER LEFT FRONT

F/O Electrical System Panel, P6-12

Row	Col	Number	Name
B	8	C00394	WINDOW HEAT POWER RIGHT FRONT
B	9	C00392	WINDOW HEAT POWER LEFT SIDE

SUBTASK 30-41-11-710-002

(2) Do the WHCU [1] BITE test:

(a) Put the WINDOW HEAT switches, on the P5–9 forward overhead panel, to the ON position.

(b) Press the LAMP TEST switch.

1) Make sure that all lights (10 red, 4 green) come on.

2) If any light is off, replace the WHCU [1].

(c) Press the BIT VERIFY switch for 1 second.

1) Make sure that no red lights come on and that the green BIT TEST OK light comes on in less than 10 seconds and stays on for 15 seconds.

2) If a red light comes on, then a fault exists.

(d) Push the FAULT HISTORY switch.

1) Make sure that the last fault is shown.

(e) Push the BIT LAMP RESET switch.

1) Make sure that all lights are off.

(f) Push the LAMP TEST and BIT LAMP RESET switches simultaneously and hold for 4 seconds.

1) Make sure that the NVRAM is erased.

(g) Push the LAMP TEST and BIT VERIFY switches simultaneously and hold for 4 seconds.

1) Make sure that the module is in the #1 WINDOW OVERRIDE mode.

(h) If necessary, push and hold the LAMP TEST switch and BIT VERIFY switch again to turn off the #1 WINDOW OVERRIDE mode.

(i) Put the WINDOW HEAT switches, on the P5–9 forward overhead panel, to the OFF position.

ECCN 9E991 BOEING PROPRIETARY - See title page for details

LOM 465-999 (Continued)

H. Put the Airplane Back to Its Usual Condition

SUBTASK 30-41-11-410-003

(1) Close this access panel:

Number	Name/Location
117A	Electronic Equipment Access Door

END OF TASK

ECCN 9E991 BOEING PROPRIETARY - See title page for details

WINDOW HEAT CONTROL UNIT - ADJUSTMENT/TEST

1. **General**

   A. This procedure has a task to test the window heat control units.

TASK 30-41-11-710-801

2. **Window Heat Control Unit System - Test**

   (Figure 501)

A. General

(1) The Window Heat Control Unit (WHCU)s are installed in the electrical/electronic (EE) compartment. A Built-In-Test Equipment (BITE) module is installed on all the control units. The test makes sure the WHCUs operate properly.

(2) The WHCUs can be tested separately or they can all be tested at the same time.

B. Location Zones

Zone	Area
117	Electrical and Electronics Compartment - Left
118	Electrical and Electronics Compartment - Right
211	Flight Compartment - Left
212	Flight Compartment - Right

C. Access Panels

Number	Name/Location
117A	Electronic Equipment Access Door

D. Prepare for the Test

SUBTASK 30-41-11-010-004

(1) Open this access panel to get access to the EE compartment:

Number	Name/Location
117A	Electronic Equipment Access Door

SUBTASK 30-41-11-860-002

(2) Press and release the BIT LAMP RESET switch on the WHCUs.

(a) Make sure all the indicator lights are off.

E. Test the Normal Functions of the WHCUs

SUBTASK 30-41-11-860-003

(1) Make sure the window temperature is less than 110°F (43°C).

NOTE: If the window temperature is more than 110°F (43°C), WHCU will not supply electrical power to heat the window.

(2) One switch at a time, put the WINDOW HEAT power switches on the window/pitot heat control panel, P5–9, to the ON position.

NOTE: If you are only testing one WHCU, you only need to put the applicable switch in the ON position. The table in (Figure 501) shows which WHCU controls each window heat.

ECCN 9E991 BOEING PROPRIETARY - See title page for details

LOM 402, 404, 406, 407, 411, 412, 415, 416, 420, 422-426, 429-434, 437-447, 450-999

(a) Make sure that the corresponding ON light on the window/pitot heat control panel comes on.

NOTE: It can take up to 15 seconds for a light to come on.

NOTE: If the window temperature is more than 110°F (43°C) corresponding ON light on the window/pitot heat control panel stays off.

LOM 427, 428

(b) Make sure that the corresponding OFF light on the window/pitot heat control panel goes out.

NOTE: It can take up to 15 seconds for a light to go out.

NOTE: If the window temperature is more than 110°F (43°C) corresponding OFF light on the window/pitot heat control panel stays on.

LOM ALL

(c) Make sure that both MASTER CAUTION lights on the glareshield panel, P7, are off.

SUBTASK 30-41-11-860-004

(3) Put the WINDOW HEAT OVHT/PWR TEST switch to the OVHT position for 1 second.

(a) Make sure that the OVERHEAT lights come on.

(b) Make sure the MASTER CAUTION lights come on.

(c) Make sure ANTI-ICE light comes on.

LOM 402, 404, 406, 407, 411, 412, 415, 416, 420, 422-426, 429-434, 437-447, 450-999

(d) Make sure the ON lights go off in less than 70 seconds.

LOM 427, 428

(e) Make sure the OFF lights go on in less than 70 seconds.

LOM ALL

SUBTASK 30-41-11-860-005

(4) One switch at a time, put each window heat control switch in the OFF position for 1 second and then put the switch in the ON position.

(a) Make sure that the applicable OVERHEAT light goes off.

LOM 402, 404, 406, 407, 411, 412, 415, 416, 420, 422-426, 429-434, 437-447, 450-999

(b) Make sure the window heat ON light comes on.

LOM 427, 428

(c) Make sure the window heat OFF light goes out.

LOM ALL

SUBTASK 30-41-11-860-006

(5) Press either MASTER CAUTION light.

(a) Make sure that the MASTER CAUTION light goes off.

(b) Make sure that the ANTI-ICE light goes off.

SUBTASK 30-41-11-860-007

(6) Wait 4 minutes.

ECCN 9E991 BOEING PROPRIETARY - See title page for details

SUBTASK 30-41-11-860-008

(7) Hold the WINDOW HEAT OVHT/ PWR TEST switch to PWR TEST not more than 60 seconds.

LOM 402, 404, 406, 407, 411, 412, 415, 416, 420, 422-426, 429-434, 437-447, 450-999

(a) Make sure that the WINDOW HEAT ON lights stay on for each window.

LOM 427, 428

(b) Make sure that the WINDOW HEAT OFF lights stay off for each window.

LOM ALL

SUBTASK 30-41-11-860-019

(8) Release the WINDOW HEAT OVHT/ PWR TEST switch.

LOM 402, 404, 406, 407, 411, 412, 415, 416, 420, 422-426, 429-434, 437-447, 450-999

(a) If holding the WINDOW HEAT OVHT/ PWR TEST switch to PWR TEST causes the OVERHEAT light to illuminate, the window heat ON lights shall go off within 70 seconds.

LOM 427, 428

(b) If holding the WINDOW HEAT OVHT/ PWR TEST switch to PWR TEST causes the OVERHEAT light to illuminate, the window heat OFF lights shall come on within 70 seconds.

LOM ALL

SUBTASK 30-41-11-860-009

(9) Put the WINDOW HEAT power switches in the OFF position.

F. BITE test

SUBTASK 30-41-11-740-005

(1) Set the applicable WINDOW HEAT control switch to ON.

SUBTASK 30-41-11-740-006

(2) Push both of the front panel BITE switches marked LAMP TEST and BITE LAMP RESET at the same time. Hold for 4 seconds until the green BIT TEST OK light comes on.

NOTE: This will erase all existing faults stored in the WHCU memory.

SUBTASK 30-41-11-740-007

(3) Push the FAULT HISTORY switch on the WHCU.

(a) Make sure that the green BIT TEST OK lights come on for 15 seconds.

SUBTASK 30-41-11-740-008

(4) Push the LAMP TEST switch.

LOM 402, 404, 406, 407, 411, 412, 415, 416, 420, 422-434, 437-447, 450-464

(a) Make sure that all six lights come on.

LOM 465-999

(b) Make sure that all fourteen lights come on.

LOM ALL

SUBTASK 30-41-11-740-009

(5) Push the BIT VERIFY switch on the WHCU.

(a) Make sure that no red lights come on and that the green BIT TEST OK light comes on in less than 10 seconds and stays on for 15 seconds.

ECCN 9E991 BOEING PROPRIETARY - See title page for details

SUBTASK 30-41-11-740-010

(6) Push the BIT LAMP RESET switch on the WHCU.

(a) Make sure that the green BIT TEST OK light shuts off.

SUBTASK 30-41-11-740-011

(7) Set the applicable window heat control switch to OFF.

G. Put the Airplane Back to its Normal Condition.

SUBTASK 30-41-11-410-004

(1) Close this access panel:

Number	Name/Location
117A	Electronic Equipment Access Door

END OF TASK

ECCN 9E991 BOEING PROPRIETARY - See title page for details

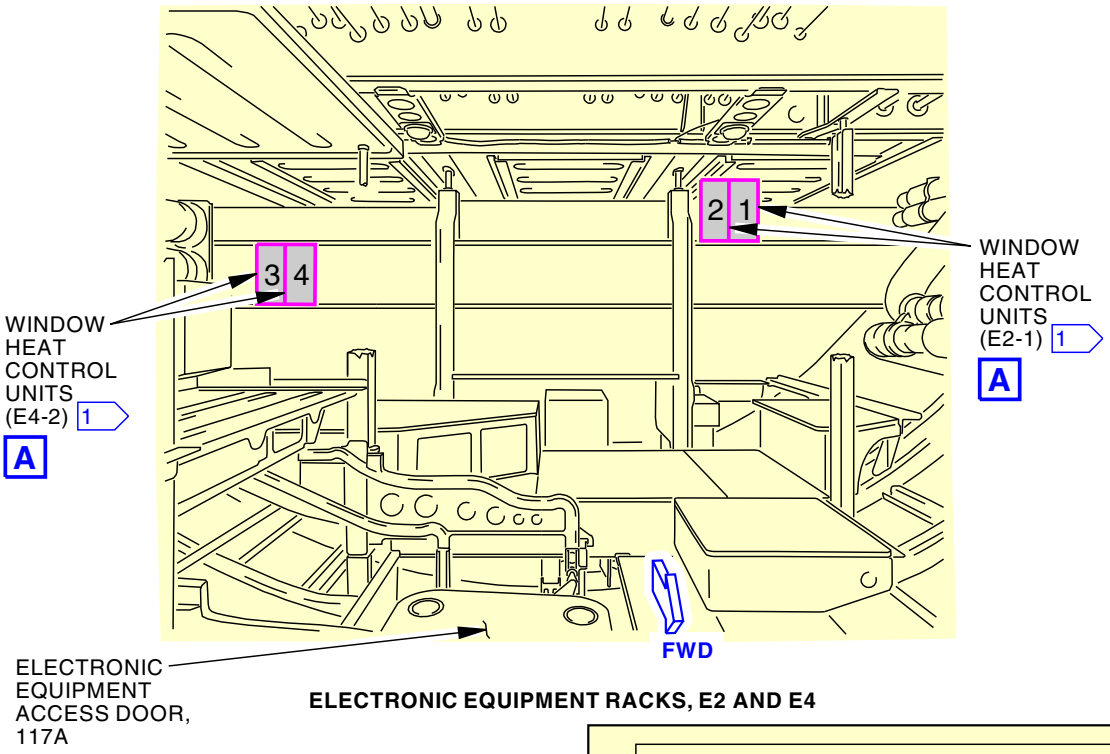

ELECTRONIC EQUIPMENT RACKS, E2 AND E4

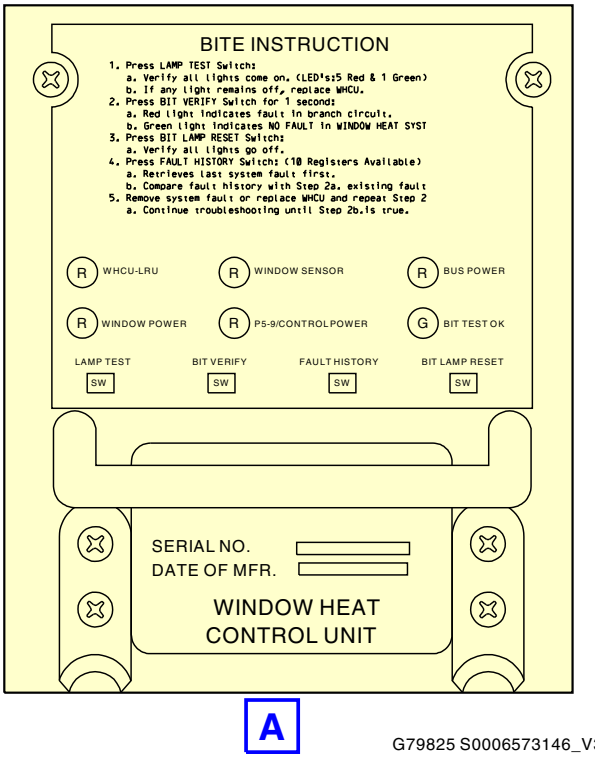

G79825 S0006573146_V3

1

UNIT	ELECTRICAL EQUIPMENT NO.	WINDOW
1	M320	R SIDE
2	M321	L FWD
3	M322	L SIDE
4	M323	R FWD

Window Heat Control Unit Test
Figure 501/30-41-11-990-801 (Sheet 1 of 5)

ECCN 9E991 BOEING PROPRIETARY - See title page for details

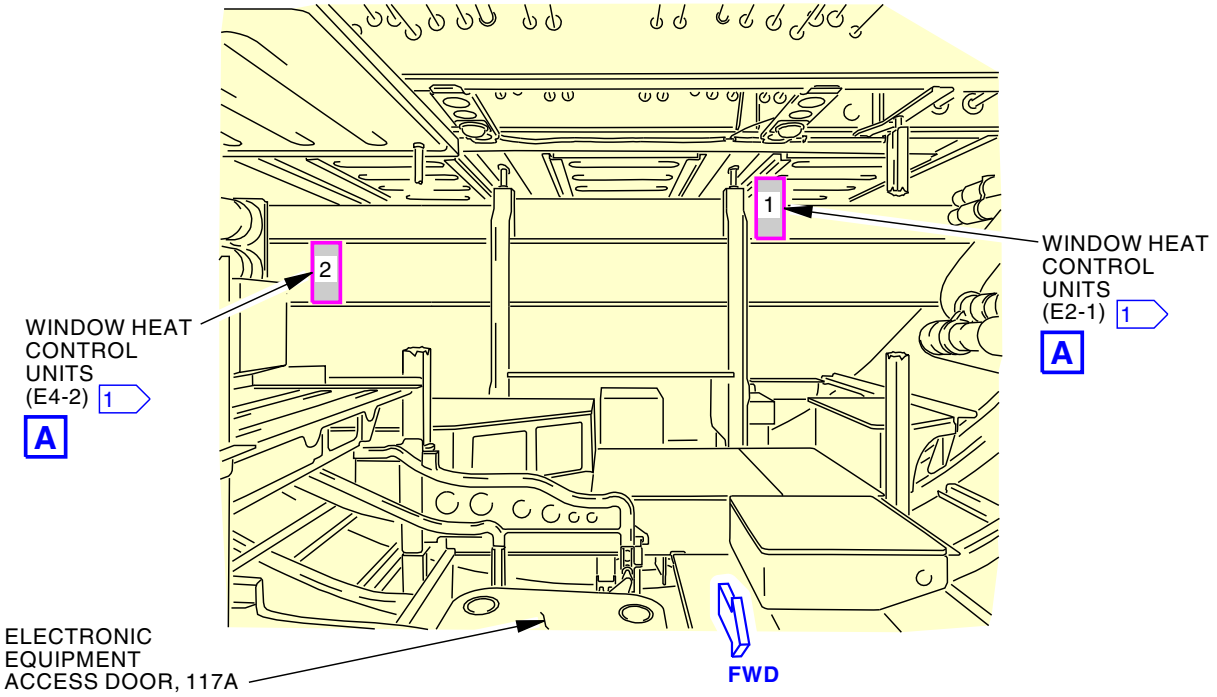

ELECTRONIC EQUIPMENT RACKS, E2 AND E4

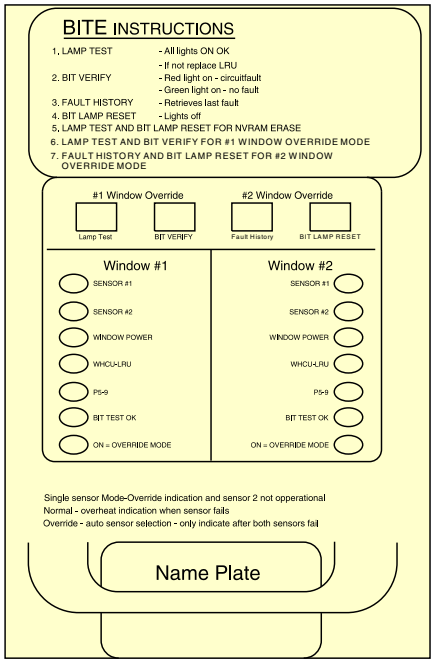

A

2368189 S0000542194_V4

1

UNIT	ELECTRICAL EQUIPMENT NO.	WINDOW
1	M321	L FWD AND R SIDE
2	M323	R FWD AND L SIDE

Window Heat Control Unit Test
Figure 501/30-41-11-990-801 (Sheet 2 of 5)

ECCN 9E991 BOEING PROPRIETARY - See title page for details

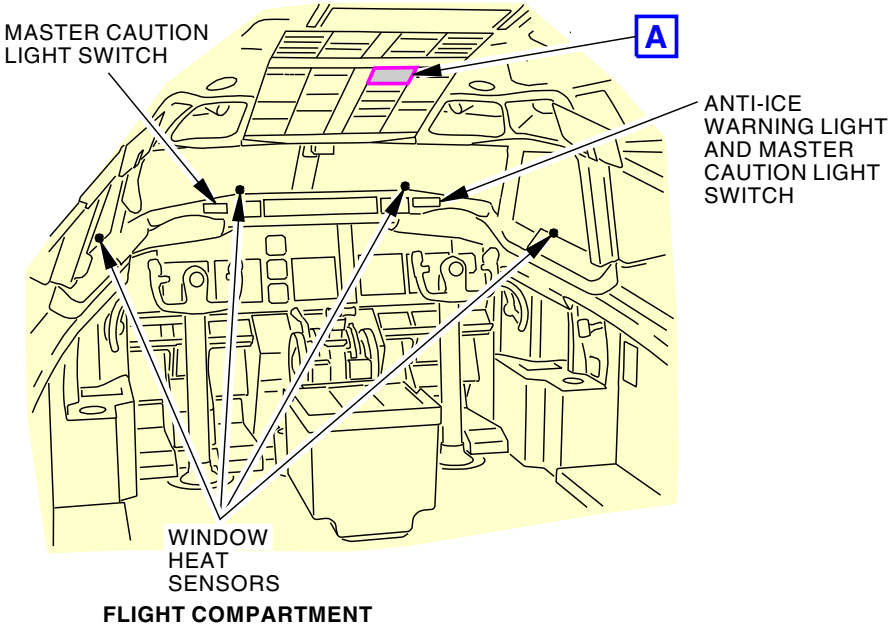

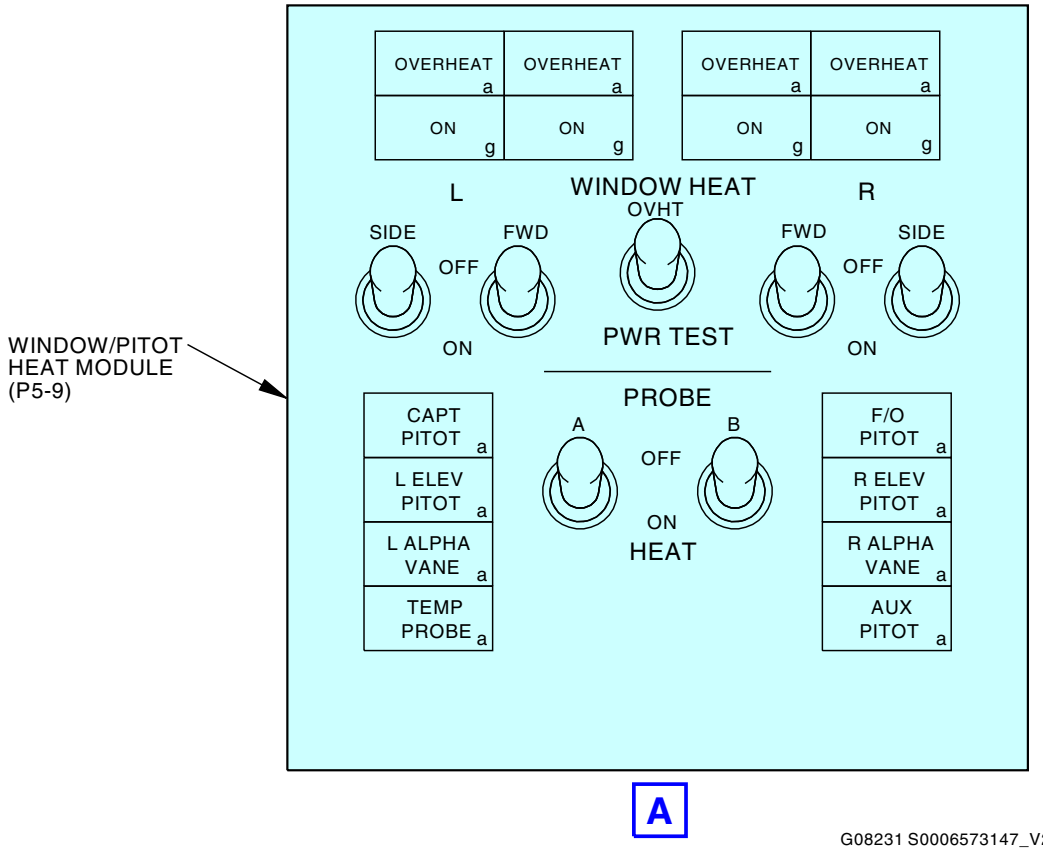

G08231 S0006573147_V2

Window Heat Control Unit Test
Figure 501/30-41-11-990-801 (Sheet 3 of 5)

ECCN 9E991 BOEING PROPRIETARY - See title page for details

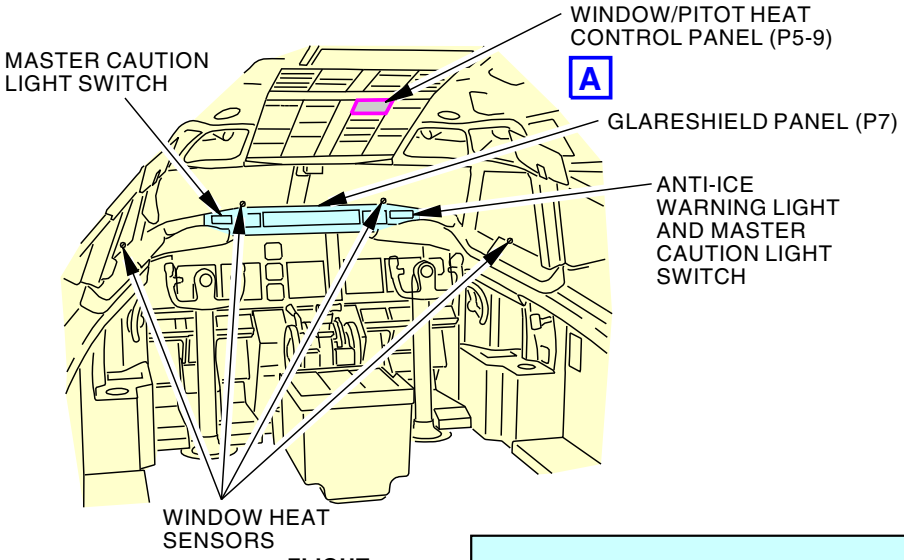

FLIGHT COMPARTMENT

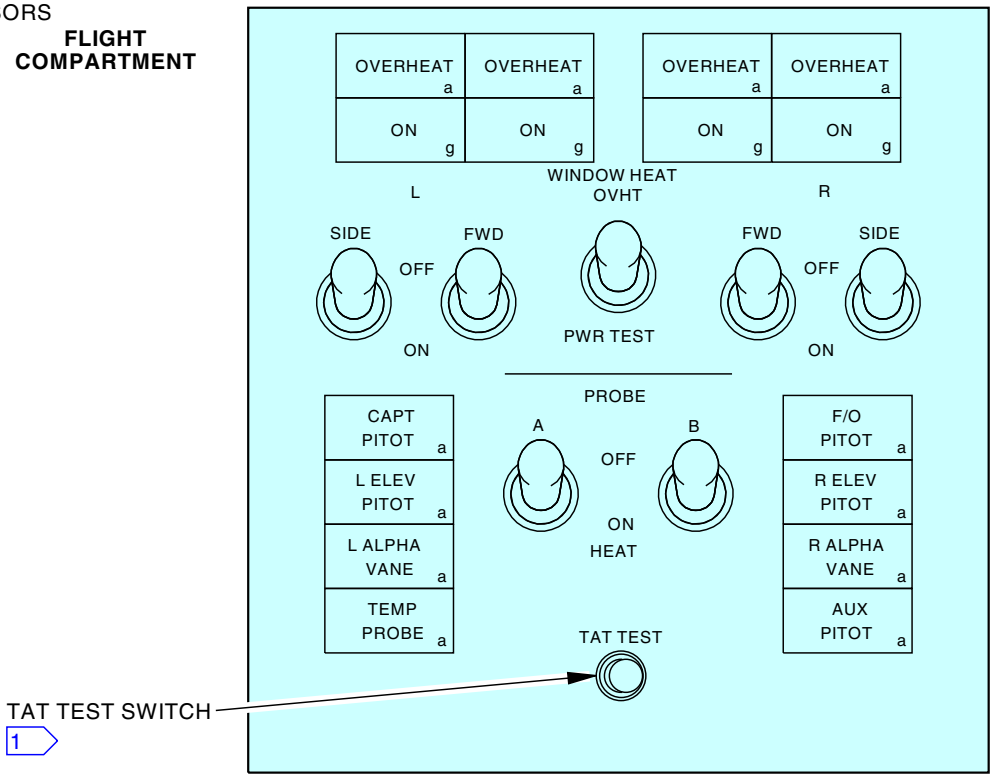

WINDOW/PITOT HEAT CONTROL PANEL (P5-9) (EXAMPLE)

A

1 IF INSTALLED

2351970 S0000536616_V4

Window Heat Control Unit Test
Figure 501/30-41-11-990-801 (Sheet 4 of 5)

ECCN 9E991 BOEING PROPRIETARY - See title page for details

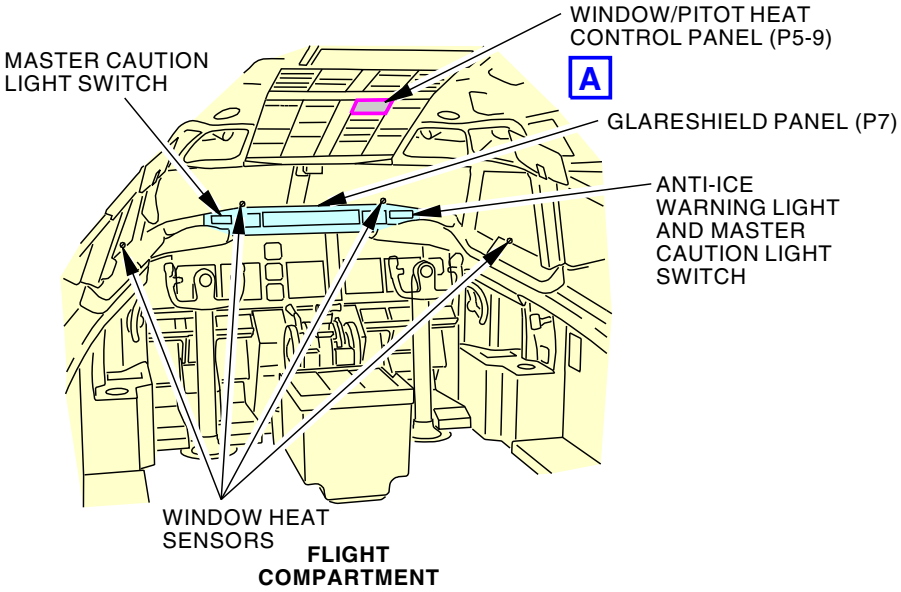

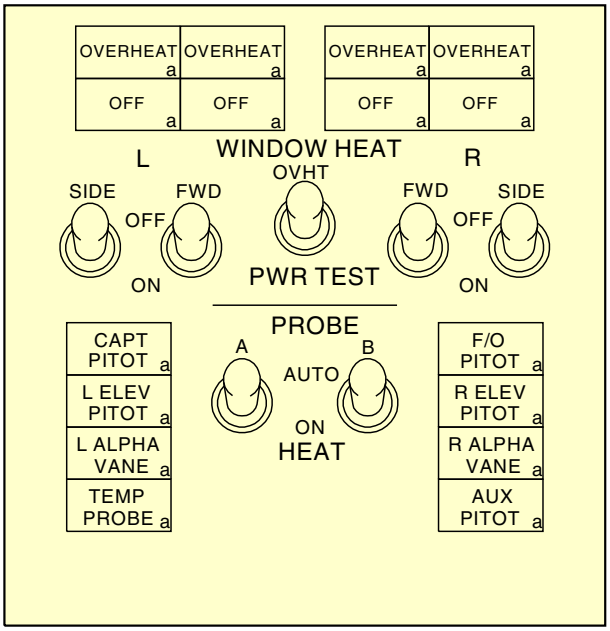

WINDOW/PITOT HEAT CONTROL PANEL (P5-9)

A

K31135 S0006573148_V4

Window Heat Control Unit Test
Figure 501/30-41-11-990-801 (Sheet 5 of 5)

ECCN 9E991 BOEING PROPRIETARY - See title page for details

WINDOW HEAT CONDUCTIVE COATING AND SENSOR - ADJUSTMENT/TEST

1. General

A. This procedure has these tasks:

(1) Check of the electrical resistance of the window heat film.

(2) Check of the temperature sensors on windows 1 and 2.

(3) Measure the Insulation Resistance (IR) and Dielectric Absorption Rate (DAR) of the control cabin windows.

LOM 402, 404, 406, 407, 411, 412, 415, 416, 420, 422-434, 437-447, 450-464

TASK 30-41-21-000-801

2. Check the Electrical Resistance of the Window Heat Film

(Figure 501)

A. General

(1) The number 1 and number 2 windows have a layer of material which heat the windows when electricity is applied. The Window Heat Control Unit (WHCU) provides power to heat the windows. The WHCUs have various output connections which should be matched to each window resistance. This test checks the electrical resistance of the window heaters and makes sure the heaters are matched to the WHCU.

B. References

Reference	Title
30-41-11-000-801	Window Heat Control Unit (WHCU) Removal (P/B 401)
30-41-11-400-801	Window Heat Control Unit (WHCU) Installation (P/B 401)

C. Location Zones

Zone	Area
117	Electrical and Electronics Compartment - Left
118	Electrical and Electronics Compartment - Right
121	Forward Cargo Compartment - Left
122	Forward Cargo Compartment - Right

D. Prepare for the Procedure

SUBTASK 30-41-21-010-001

(1) Remove the applicable WHCU for the window (TASK 30-41-11-000-801).

NOTE: See Table 501 to identify which WHCU needs to be removed.

SUBTASK 30-41-21-010-002

(2) Remove the panels on the forward end of the forward cargo compartment to access the window heat connections on the back of the shelves (Figure 501).

E. Check of the Electrical Resistance of the Window Heat Film

SUBTASK 30-41-21-020-001

(1) Remove the applicable connector from the applicable shelf (Figure 501 and Table 501).

SUBTASK 30-41-21-760-001

(2) Measure the resistance from the applicable connector pin to airplane ground (Table 501).

ECCN 9E991 BOEING PROPRIETARY - See title page for details

SUBTASK 30-41-21-210-001

(3) Determine the terminal board tap that matches the resistance measured at the connector (Table 501).

NOTE: For example, if you measure 40 ohms on connector D40070P pin F, the matching terminal board tap is terminal board TB5010 tap 3.

NOTE: When checking the resistance on a used window, do not use the window code to determine the terminal board tap. It is possible for the window resistance to change with time.

Table 501/30-41-21-993-803

WINDOW	CONNECTOR PIN	WINDOW CODE	RESISTANCE	TERMINAL BOARD TAP	WHCU	WDM
LEFT FRONT	D40070P	H13	31.4-35.1 OHM	TB5010 - 1	M321	30-41-11
1	F	H12	35.1-38.8 OHM	-2		
		H11	38.8-42.6 OHM	-3		
			42.6-47.3 OHM	-4		
			47.3-52.0 OHM	-5		
RIGHT SIDE	D40070P	H16	55.7-62.3 OHM	TB5014 - 1	M320	30-41-11
2	A3	H15	62.3-69.0 OHM	-2		
		H14	69.0-75.5 OHM	-3		
			75.5-81.6 OHM	-4		
			81.6-90.3 OHM	-5		
			90.3-100 OHM	-6		
RIGHT FRONT	D40068P	H13	31.4-35.1 OHM	TB5012 - 1	M323	30-41-12
1	F	H12	35.1-38.8 OHM	-2		
		H11	38.8-42.6 OHM	-3		
			42.6-47.3 OHM	-4		
			47.3-52.0 OHM	-5		
LEFT SIDE	D40068P	H16	55.7-62.3 OHM	TB5016 - 1	M322	30-41-12
2	A3	H15	62.3-69.0 OHM	-2		
		H14	69.0-75.5 OHM	-3		
			75.5-81.6 OHM	-4		
			81.6-90.3 OHM	-5		
			90.3-100 OHM	-6		

(a) If the window resistance is outside the limits of the table, then go to the fault isolation manual for assistance.

SUBTASK 30-41-21-820-002

(4) Make sure that the correct terminal board tap is connected to the applicable connector.

ECCN 9E991 BOEING PROPRIETARY - See title page for details

F. Put the Airplane Back to Its Usual Condition

SUBTASK 30-41-21-410-001

(1) Reinstall the forward cargo compartment access panels.

SUBTASK 30-41-21-420-001

(2) Re-install the WHCU (TASK 30-41-11-400-801).

END OF TASK

ECCN 9E991 BOEING PROPRIETARY - See title page for details

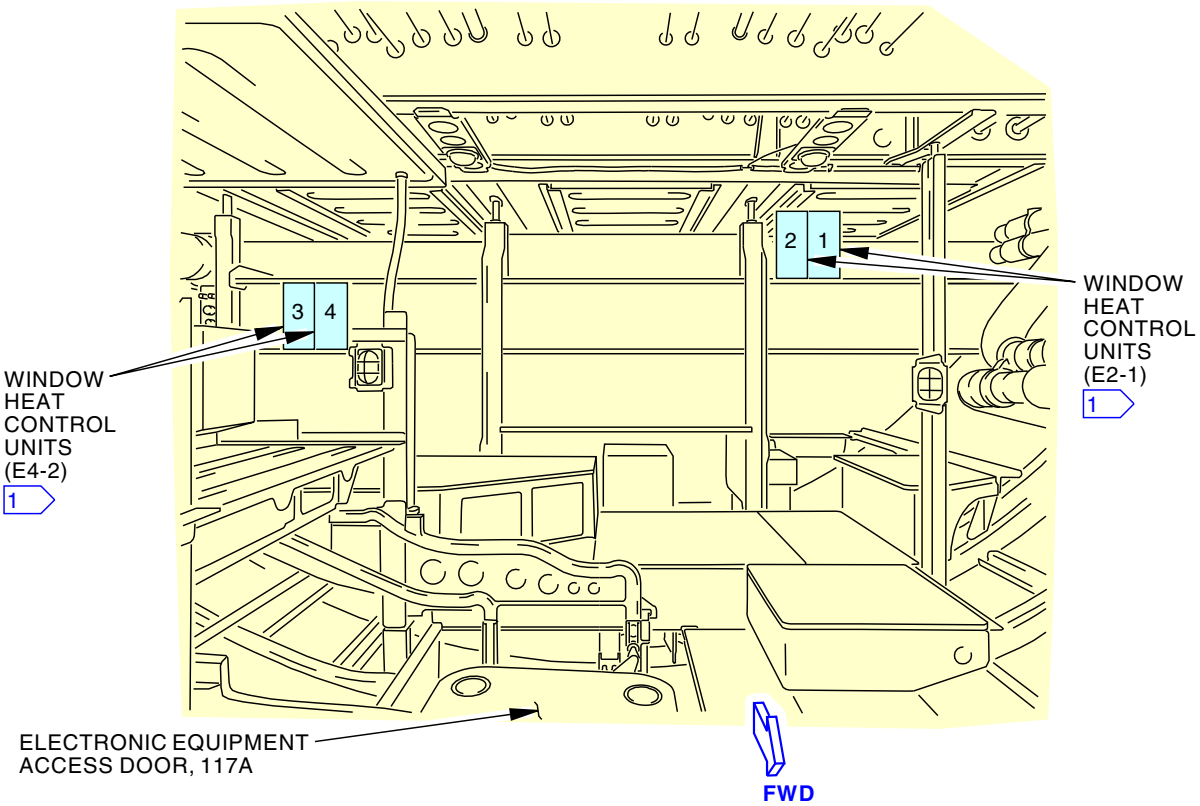

ELECTRONIC EQUIPMENT RACKS, E2, E3 AND E4

1

UNIT	ELECTRICAL EQUIPMENT NO.	WINDOW
1	M320	R SIDE
2	M321	L FWD
3	M322	L SIDE
4	M323	R FWD

G35291 S0006573155_V2

Window Heat Conductive Coating Test
Figure 501/30-41-21-990-801 (Sheet 1 of 3)

ECCN 9E991 BOEING PROPRIETARY - See title page for details

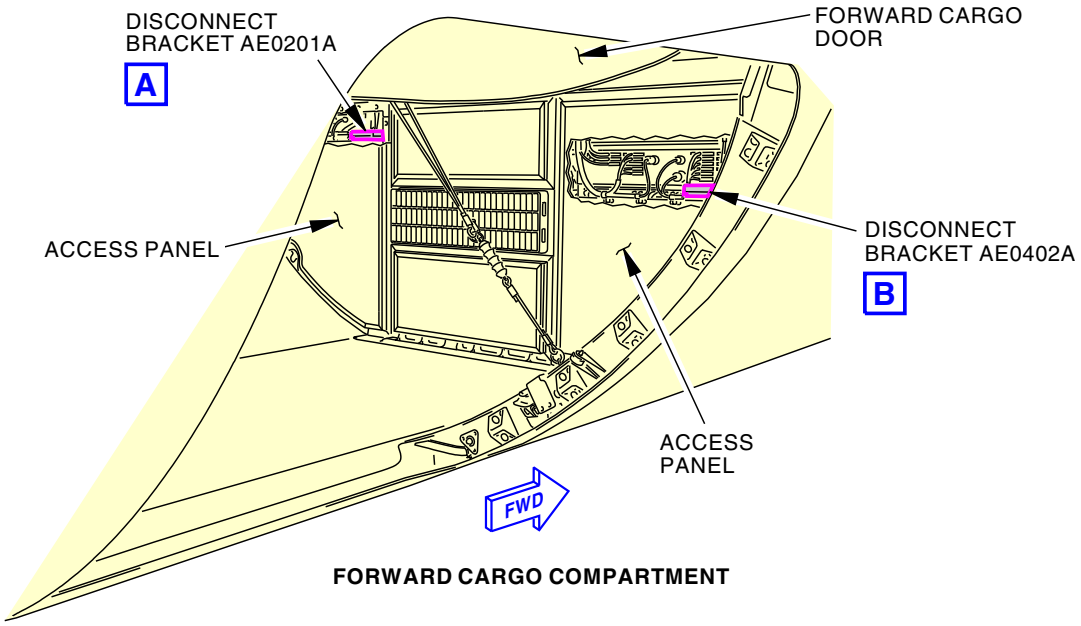

FORWARD CARGO COMPARTMENT

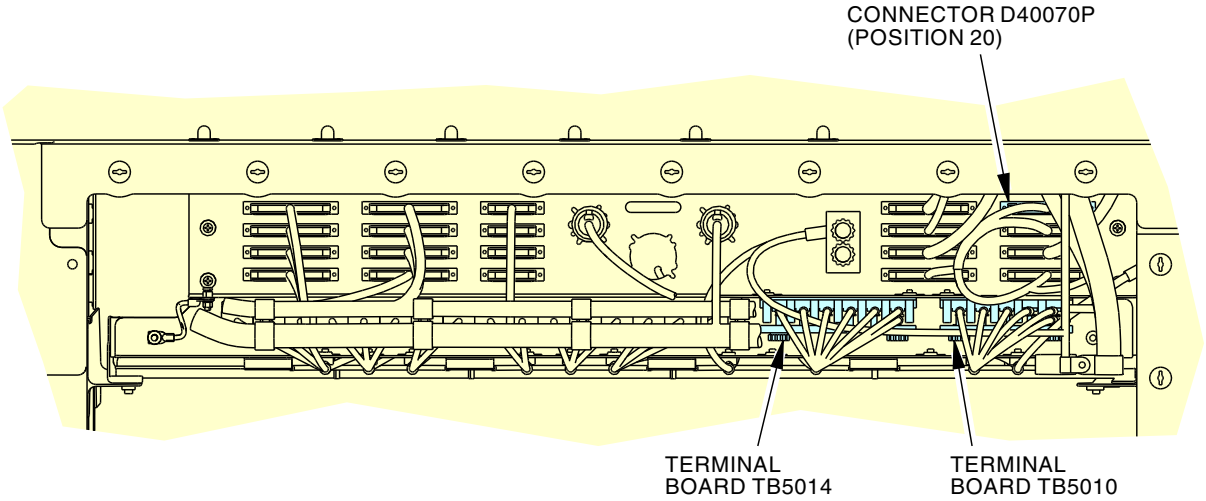

DISCONNECT BRACKET AE0201A
(EXAMPLE)

A

G25829 S0006573156_V4

Window Heat Conductive Coating Test
Figure 501/30-41-21-990-801 (Sheet 2 of 3)

ECCN 9E991 BOEING PROPRIETARY - See title page for details

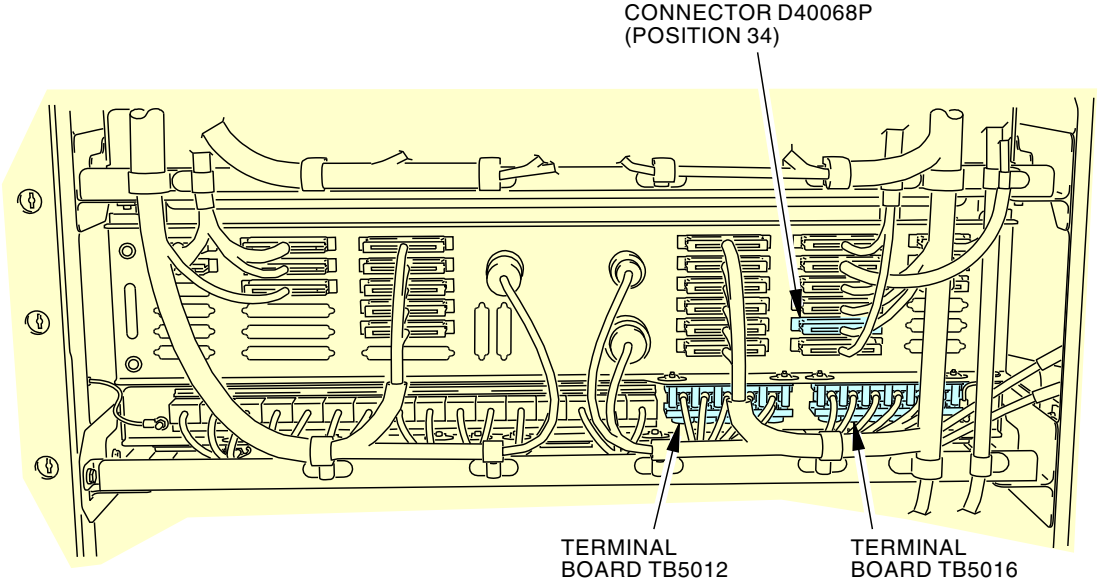

DISCONNECT BRACKET AE0402A
(EXAMPLE)

B

3046440 S0000812886_V1

Window Heat Conductive Coating Test
Figure 501/30-41-21-990-801 (Sheet 3 of 3)

ECCN 9E991 BOEING PROPRIETARY - See title page for details

TASK 30-41-21-760-801

3. **Measure the Resistance of the Window Temperature Sensors**
(Figure 502, Figure 503)

A. **General**

(1) The number 1 and number 2 windows have sensors that measure the temperature of the windows. This test checks the electrical resistance of the window temperature sensors.

B. **References**

Reference	Title
30-41-11-000-801	Window Heat Control Unit (WHCU) Removal (P/B 401)
30-41-11-400-801	Window Heat Control Unit (WHCU) Installation (P/B 401)

C. **Tools/Equipment**

NOTE: When more than one tool part number is listed under the same "Reference" number, the tools shown are alternates to each other within the same airplane series. Tool part numbers that are replaced or non-procurable are preceded by "Opt:", which stands for Optional.

Reference	Description
COM-1572	Thermometer - Infrared, Intrinsically Safe Part #: 568 EX Supplier: 89536 Part #: 568 EX/BR Supplier: 89536 Part #: 568 EX/CN Supplier: 89536 Part #: 568 EX/ETL Supplier: 89536 Opt Part #: DHS24XC-FM Supplier: 08086 Opt Part #: DHS24XF-FM Supplier: 08086 Opt Part #: EX-MP4 A Supplier: 3GT36 Opt Part #: IR-16L3 IS Supplier: 75037
STD-442	Gun - Heat, 180 deg. F (82 deg. C) Maximum Output Temperature
STD-1179	Tester - Pyrometer

D. **Consumable Materials**

Reference	Description	Specification
D50244	Compound - Dow Corning 340 Heat Sink Compound	
G01659	Swab - Cotton Or Rayon, (Disposable)	

E. **Location Zones**

Zone	Area
117	Electrical and Electronics Compartment - Left
118	Electrical and Electronics Compartment - Right

F. **Prepare for the Window Temperature Sensors Resistance Measurement**

SUBTASK 30-41-21-860-002

(1) Make sure that the window temperature is between 68°F (20°C) and 108°F (42°C).

(a) If the ambient temperature is significantly less the specified test temperature range of 68°F (20°C) to 108°F (42°C), do the Heat the Windows - Window Heat Control Unit (WHCU) or Heat the Window - Heat Gun procedures below.

ECCN 9E991 BOEING PROPRIETARY - See title page for details

(b) If the window temperature is between 68°F (20°C) and 108°F (42°C), remove the applicable WHCU for the window, do this task: Window Heat Control Unit (WHCU) Removal, TASK 30-41-11-000-801.

G. Heat the Window - WHCU

SUBTASK 30-41-21-880-004

(1) Do these steps to heat the windows if the temperature is too cold:

NOTE: These steps can be used if the ambient temperature is significantly less the specified test temperature range of 68°F (20°C) to 108°F (42°C).

(a) One switch at a time, put the WINDOW HEAT switches, on the window and pitot heat module, to the ON position.

LOM 402, 404, 406, 407, 411, 412, 415, 416, 420, 422-426, 429-434, 437-447, 450-464

1) Make sure that the corresponding ON light on the window and pitot heat module comes on.

NOTE: It can take up to 15 seconds for the light to come on.

LOM 427, 428

2) Make sure that the corresponding OFF light on the window and pitot heat module goes out.

NOTE: It can take up to 15 seconds for the light to go out.

LOM 402, 404, 406, 407, 411, 412, 415, 416, 420, 422-434, 437-447, 450-464

3) Make sure that both master caution lights are off.

(b) Wait for the windows to heat up.

1) Use an Infrared Thermometer, COM-1572 (including pyrometer, STD-1179), or other temperature indicating device near each window temperature sensor to measure the window temperature.

2) Make sure that the front and side windows stabilize at 90°F (32°C) to 120°F (49°C).

NOTE: It can take up to 4 minutes for the window temperatures to stabilize.

(c) Put the WINDOW HEAT power switches in the OFF position.

1) Make sure that the OVERHEAT lights, MASTER CAUTION lights, and ANTI-ICE lights are off.

SUBTASK 30-41-21-010-008

(2) Remove the applicable WHCU for the window (Table 502).

(a) Do this task: Window Heat Control Unit (WHCU) Removal, TASK 30-41-11-000-801.

H. Heat the Window - Heat Gun

SUBTASK 30-41-21-880-005

(1) Do these steps to heat the windows if the temperature is too cold:

NOTE: These steps can be used if the ambient temperature is significantly less the specified test temperature range of 68°F (20°C) to 108°F (42°C).

ECCN 9E991 BOEING PROPRIETARY - See title page for details

(a) Heat the window near the sensor with a 180 deg. F (82 deg. C) maximum output temperature heat gun, STD-442, for up to thirty seconds.

NOTE: You can use an Infrared Thermometer, COM-1572 (including pyrometer, STD-1179), or other temperature indicating device to do a check of the temperature.

SUBTASK 30-41-21-010-007

(2) Remove the applicable WHCU for the window (Table 502).

(a) Do this task: Window Heat Control Unit (WHCU) Removal, TASK 30-41-11-000-801.

I. Window Temperature Sensors Resistance Measurement

SUBTASK 30-41-21-760-002

(1) Measure the resistance of the applicable window temperature sensor.

(a) Apply pressure to the corner near the temperature sensor terminal when measuring the resistance of the sensors.

NOTE: It is necessary to apply the pressure to the terminals to find an intermittent connection that can occur at any point along the temperature sensor.

(b) Make sure that the resistance of the sensor is within the limits (Figure 503).

Table 502/30-41-21-993-804

WINDOW TEMP SENSOR	CONNECTOR/PINS	WHCU	WDM
LEFT FRONT 1	D1044A/ 13 TO 26	M321	30-41-11
RIGHT SIDE 2	D1042A/ 13 TO 26	M320	30-41-11
RIGHT SIDE 2 (SPARE)	D1042A/ 13 TO 26	M320	30-41-11
RIGHT FRONT 1	D1048A/ 13 TO 26	M323	30-41-12
LEFT SIDE 2	D1046A/ 13 TO 26	M322	30-41-12
LEFT SIDE 2 (SPARE)	D1046A/ 13 TO 26	M322	30-41-12

NOTE: Window temperatures of 68°F (20°C) - 108°F (42°C) are expected for this test.

NOTE: If the temperature of any individual window in Table 502 is greater than 108°F (42°C) due to environmental condition(s), then a measured sensor resistance value less than 362 ohms is acceptable.

NOTE: A measured sensor resistance value above 362 ohms indicates a failed sensor.

SUBTASK 30-41-21-760-003

(2) Do these steps to test the resistance of the spare sensors for the front windows:

(a) Put the applicable WNDSHLD SNSR switches in the SPARE position.

(b) Make sure that the resistance is within the limits (Figure 503).

(c) Put the WNDSHLD SNSR switches back to the original position.

SUBTASK 30-41-21-760-004

(3) Do this test to measure the resistance of the spare sensors for the side windows.

NOTE: This test applies to spare sensors without quick disconnect plugs.

ECCN 9E991 BOEING PROPRIETARY - See title page for details

(a) Move the rubber terminal boot covers to expose electrical terminals and mounting screws.

NOTE: The terminals are found at the bottom aft corner of the No. 2 Windows.

(b) Examine the terminals for corrosion.

1) If it is necessary, clean the terminals.

(c) Remove the D terminal lug that is attached to the primary sensor.

(d) Install the D terminal lug to the spare sensor.

(e) Make sure that the resistance is within the limits (Figure 503).

(f) Remove the D terminal lug that is attached to the spare sensor.

(g) Install the D terminal lug to the primary sensor.

(h) Apply a layer of Dow Corning 340 heat sink compound, D50244, to the terminals with a swab, G01659.

NOTE: The Dow Corning 340 heat sink compound, D50244, is intended to prevent inadvertent loss of insulation between the sensor terminals and the metal frame of the window, that can cause the window to overheat.

(i) Install the rubber terminal boot covers over the terminals as required.

1) Make sure that the rubber terminal boot covers are securely installed to avoid dislocation.

SUBTASK 30-41-21-760-007

(4) Do this test to measure the resistance of the spare sensors for the side windows.

NOTE: This test applies to spare sensors with quick disconnect plugs.

(a) Remove the quick disconnect plugs from the channel.

(b) Disconnect the quick disconnect plug for the primary sensor.

(c) Examine the quick disconnect plugs for the primary sensor and spare sensor for corrosion and clean as necessary.

(d) Connect the quick disconnect plug for the spare sensor.

(e) Make sure that the resistance is within the limits (Figure 503).

(f) Disconnect the quick disconnect plug for the spare sensor and reconnect the quick disconnect plug to the primary sensor.

(g) Place the quick disconnect plugs back in the channel.

J. Put the Airplane Back to Its Usual Condition

SUBTASK 30-41-21-420-002

(1) Install the applicable WHCU (TASK 30-41-11-400-801).

END OF TASK

ECCN 9E991 BOEING PROPRIETARY - See title page for details

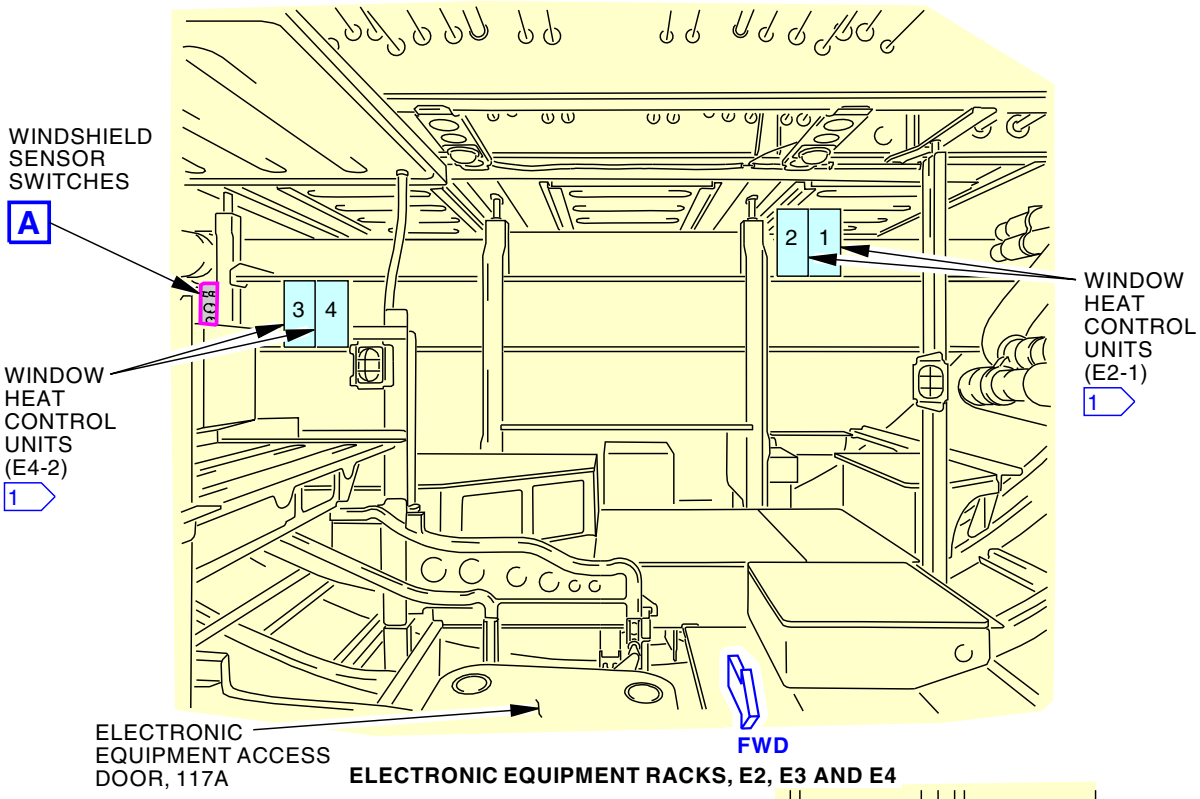

ELECTRONIC EQUIPMENT RACKS, E2, E3 AND E4

1

UNIT	ELECTRICAL EQUIPMENT NO.	WINDOW
1	M320	R SIDE
2	M321	L FWD
3	M322	L SIDE
4	M323	R FWD

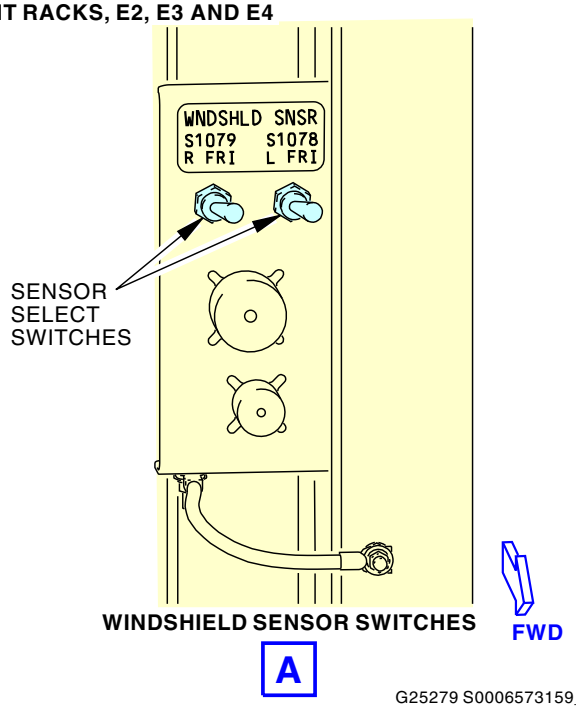

WINDSHIELD SENSOR SWITCHES

G25279 S0006573159_V2

Window Temperature Sensor Test
Figure 502/30-41-21-990-802

ECCN 9E991 BOEING PROPRIETARY - See title page for details

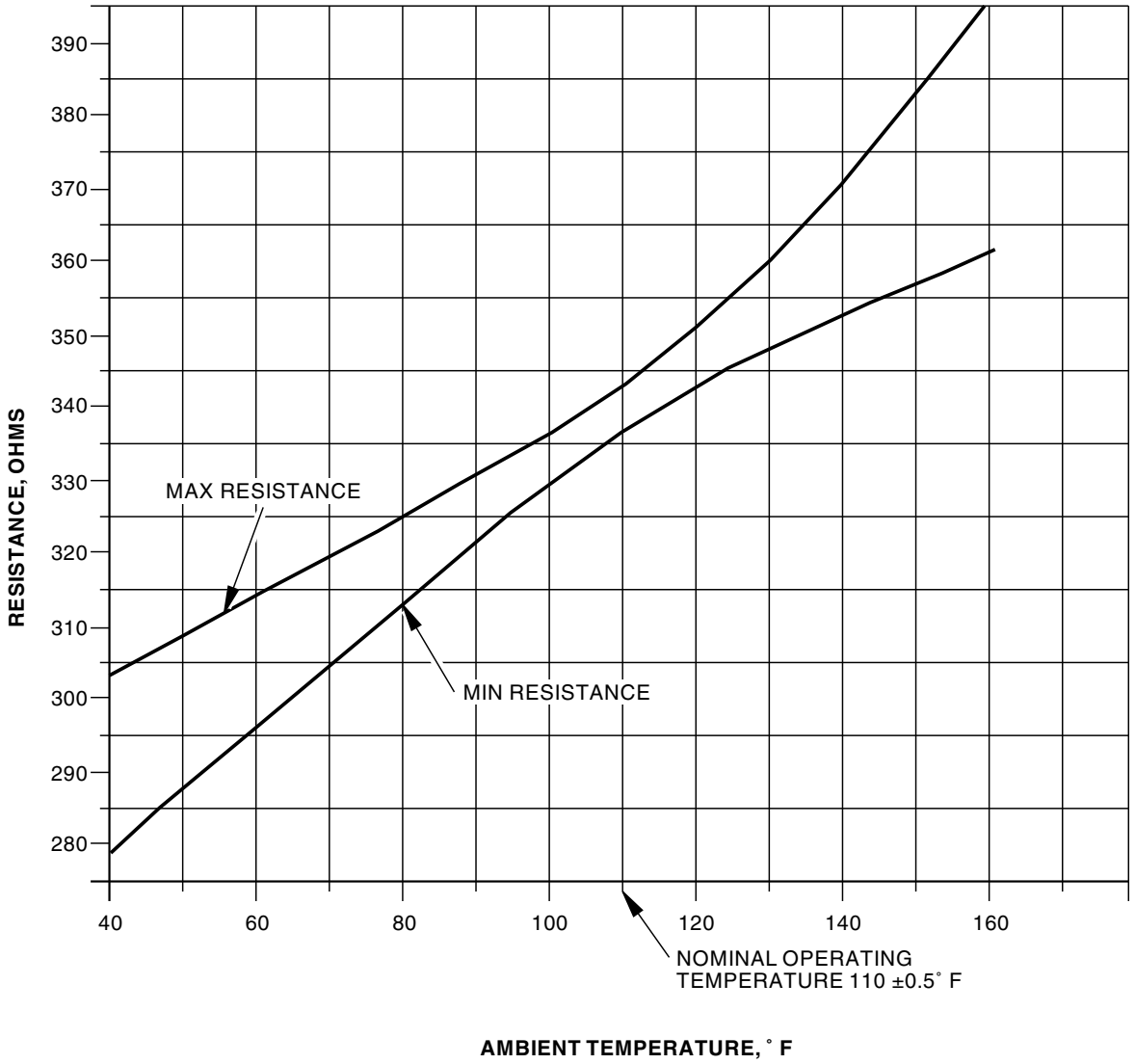

2433813 S0000563187_V1

Window Heat Control Sensor Resistance
Figure 503/30-41-21-990-804

ECCN 9E991 BOEING PROPRIETARY - See title page for details

TASK 30-41-21-760-802

4. Check the Electrical Resistance of the Window Heat Film

A. General

(1) The number 1 and number 2 windows have a layer of material which heat the windows when electricity is applied. The window heat control units (WHCUs) provide power to heat the windows. The WHCUs will measure the resistance of the window at start-up and then adjust the output voltage and power accordingly.

B. References

Reference	Title
30-41-11-000-803	Window Heat Control Unit (WHCU) Removal (P/B 401)
30-41-11-400-803	Window Heat Control Unit (WHCU) Installation (P/B 401)

C. Location Zones

Zone	Area
117	Electrical and Electronics Compartment - Left
118	Electrical and Electronics Compartment - Right
121	Forward Cargo Compartment - Left
122	Forward Cargo Compartment - Right

D. Prepare for the Check

SUBTASK 30-41-21-010-004

(1) Remove the applicable WHCU for the window, do this task: Window Heat Control Unit (WHCU) Removal, TASK 30-41-11-000-803.

E. Electrical Resistance of the Window Heat Film Check

SUBTASK 30-41-21-970-002

(1) Measure the resistance at each connector to ground as follows.

(a) Unit 1 Left Fwd M321 D16230 pin 1 to ground.

(b) Unit 1 Right side M321 D16230 pin 3 to ground.

(c) Unit 2 Right Fwd M323 D16232 pin 1 to ground.

(d) Unit 2 Left side M323 D16232 pin 3 to ground.

SUBTASK 30-41-21-970-003

(2) Make sure that the window resistance is within the range of 31.4 to 52 ohms for the front windows (No. 1), and 55.7 to 100 ohms for the side windows (No. 2).

F. Put the Airplane Back to Its Usual Condition

SUBTASK 30-41-21-410-003

(1) Re-install the WHCU, do this task: Window Heat Control Unit (WHCU) Installation, TASK 30-41-11-400-803.

END OF TASK

ECCN 9E991 BOEING PROPRIETARY - See title page for details

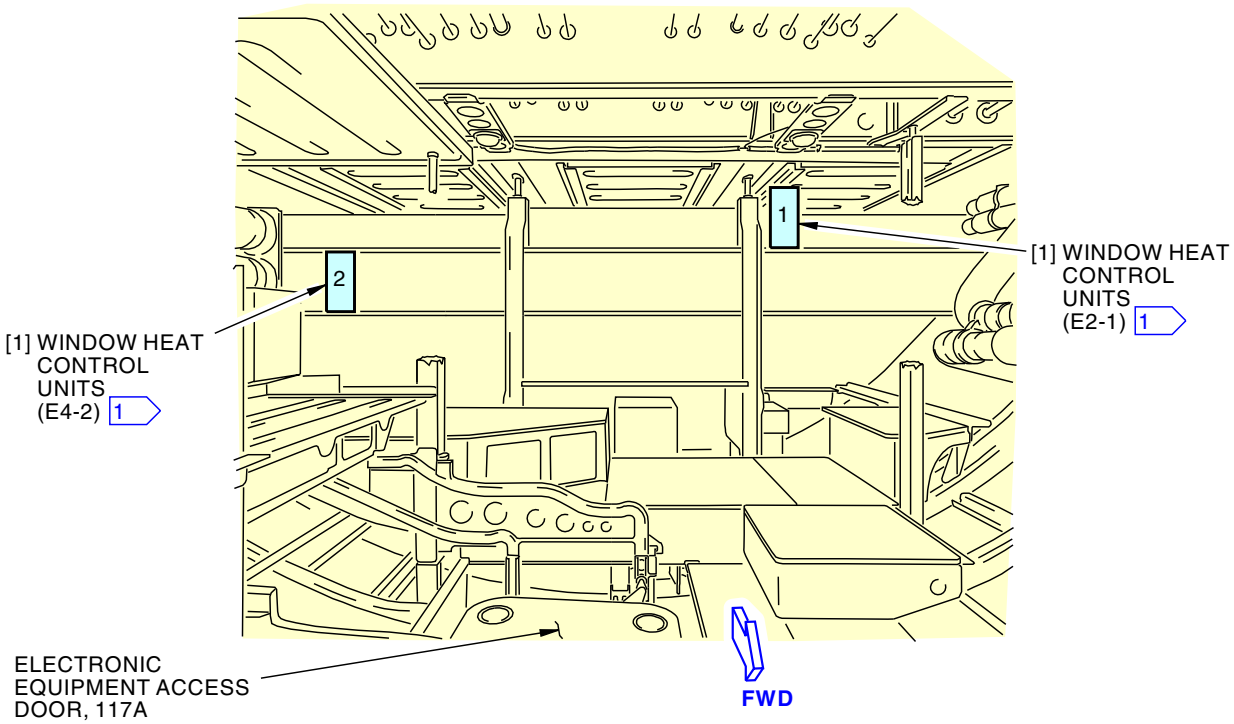

ELECTRONIC EQUIPMENT RACKS, E2, E3 AND E4

1

UNIT	ELECTRICAL EQUIPMENT NO.	WINDOW
1	M321	L FWD AND R SIDE
2	M323	R FWD AND L SIDE

2430830 S0000562454_V1

Window Heat Conductive Coating Test
Figure 504/30-41-21-990-803

ECCN 9E991 BOEING PROPRIETARY - See title page for details

TASK 30-41-21-760-803

5. **Measure the Resistance of the Window Temperature Sensors**
(Figure 505)

A. **General**

(1) The number 1 and number 2 windows have sensors that measure the temperature of the windows. This test checks the electrical resistance of the window temperature sensors.

B. **References**

Reference	Title
30-41-11-000-803	Window Heat Control Unit (WHCU) Removal (P/B 401)
30-41-11-400-803	Window Heat Control Unit (WHCU) Installation (P/B 401)

C. **Tools/Equipment**

NOTE: When more than one tool part number is listed under the same "Reference" number, the tools shown are alternates to each other within the same airplane series. Tool part numbers that are replaced or non-procurable are preceded by "Opt:", which stands for Optional.

Reference	Description
COM-1572	Thermometer - Infrared, Intrinsically Safe Part #: 568 EX Supplier: 89536 Part #: 568 EX/BR Supplier: 89536 Part #: 568 EX/CN Supplier: 89536 Part #: 568 EX/ETL Supplier: 89536 Opt Part #: DHS24XC-FM Supplier: 08086 Opt Part #: DHS24XF-FM Supplier: 08086 Opt Part #: EX-MP4 A Supplier: 3GT36 Opt Part #: IR-16L3 IS Supplier: 75037
STD-442	Gun - Heat, 180 deg. F (82 deg. C) Maximum Output Temperature
STD-1179	Tester - Pyrometer

D. **Consumable Materials**

Reference	Description	Specification
D50244	Compound - Dow Corning 340 Heat Sink Compound	
G01659	Swab - Cotton Or Rayon, (Disposable)	

E. **Location Zones**

Zone	Area
117	Electrical and Electronics Compartment - Left
118	Electrical and Electronics Compartment - Right

F. **Prepare for the Window Temperature Sensors Resistance Measurement**

SUBTASK 30-41-21-860-003

(1) Make sure that the window temperature is between 68°F (20°C) - 108°F (42°C).

(a) If the ambient temperature is significantly less the specified test temperature range of 68°F (20°C) to 108°F (42°C), do the Heat the Windows - Window Heat Control Unit (WHCU) or Heat the Window - Heat Gun procedures below.

ECCN 9E991 BOEING PROPRIETARY - See title page for details

LOM 465-999 (Continued)

(b) If the window temperature is between 68°F (20°C) - 108°F (42°C), remove the applicable WHCU for the window, do this task: Window Heat Control Unit (WHCU) Removal, TASK 30-41-11-000-803.

G. Heat the Window - WHCU

SUBTASK 30-41-21-880-003

(1) Do these steps to heat the windows if the temperature is too cold:

NOTE: These steps can be used if the ambient temperature is significantly less the specified test temperature range of 68°F (20°C) to 108°F (42°C).

(a) One switch at a time, put the WINDOW HEAT switches, on the window and pitot heat module, to the ON position.

1) Make sure that the corresponding ON light on the window and pitot heat module comes on.

NOTE: It can take up to 15 seconds for the light to come on.

2) Make sure that both master caution lights are off.

(b) Wait for the windows to heat up.

1) Use an Infrared Thermometer, COM-1572 (including pyrometer, STD-1179), or other temperature indicating device near each window temperature sensor to measure the window temperature.

2) Make sure that the front and side windows stabilize at 90°F (32°C) - 120°F (49°C).

NOTE: It can take up to 4 minutes for the window temperatures to stabilize.

(c) Put the WINDOW HEAT power switches in the OFF position.

1) Make sure that the OVERHEAT lights, the MASTER CAUTION lights, and the ANTI-ICE lights are off.

SUBTASK 30-41-21-010-009

(2) Remove the applicable WHCU for the window.

(a) Remove the WHCU, do this task: Window Heat Control Unit (WHCU) Removal, TASK 30-41-11-000-803

H. Heat the Window - Heat Gun

SUBTASK 30-41-21-880-002

(1) Do these steps to heat the windows if the temperature is too cold:

NOTE: These steps can be used if the ambient temperature is significantly less the specified test temperature range of 68°F (20°C) - 108° (42°C).

(a) Heat the window near the sensor with a 180 deg. F (82 deg. C) maximum output temperature heat gun, STD-442, for up to thirty seconds.

NOTE: You can use an Infrared Thermometer, COM-1572 (including pyrometer, STD-1179), or other temperature indicating device to do a check of the temperature.

SUBTASK 30-41-21-010-010

(2) Remove the applicable WHCU for the window.

(a) Remove the WHCU, do this task: Window Heat Control Unit (WHCU) Removal, TASK 30-41-11-000-803.

ECCN 9E991 BOEING PROPRIETARY - See title page for details

LOM 465-999 (Continued)

I. Resistance of the Window Temperature Sensors Measurement

SUBTASK 30-41-21-760-005

(1) Measure the resistance of the applicable window temperature sensor.

(a) Apply pressure to the corner near the temperature sensor terminal when measuring the resistance of the sensors.

NOTE: It is necessary to apply the pressure to the terminals to find an intermittent connection that can occur at any point along the temperature sensor.

(b) Make sure that the resistance of the sensor is within the limits shown on Figure 505.

Table 503/30-41-21-993-805

WINDOW TEMP SENSOR	CONNECTOR/PINS	WHCU	WDM
LEFT FRONT 1 (Primary)	D16230/ 19 TO 25	M321	30-41-11
LEFT FRONT 1 (Spare)	D16230/ 26 TO 27	M321	30-41-11
RIGHT SIDE 2 (Primary)	D16230/ 17 TO 18	M321	30-41-11
RIGHT SIDE 2 (Spare)	D16230/ 17 TO 18	M321	30–41–11
RIGHT FRONT 1 (Primary)	D16232/ 19 TO 25	M323	30-41-12
RIGHT FRONT 1 (Spare)	D16232/ 26 TO 27	M323	30-41-12
LEFT SIDE 2 (Primary)	D16232/ 17 TO 18	M323	30-41-12
LEFT SIDE 2 (Spare)	D16232/ 17 TO 18	M323	30–41–12

NOTE: Window temperatures of 68°F (20°C) - 108°F (42°C) are expected for this test.

NOTE: If the temperature of any individual window in Table 503 is greater than 108°F (42°C) due to environmental condition(s), then a measured sensor resistance value less than 362 ohms is acceptable.

NOTE: A measured sensor resistance value above 362 ohms indicates a failed sensor.

SUBTASK 30-41-21-760-006

(2) Do this test to measure the resistance of the spare sensors for the side windows (Table 503):

NOTE: This test applies to spare sensors without quick disconnect plugs.

(a) Move the rubber terminal boot covers to expose electrical terminals and mounting screws.

NOTE: The terminals are found at the bottom aft corner of the No. 2 Windows.

(b) Examine the terminals for corrosion.

1) If it is necessary, clean the terminals.

(c) Remove the D terminal lug that is attached to the primary sensor.

(d) Install the D terminal lug to the spare sensor.

(e) Make sure that the resistance is within the limits (Figure 505).

(f) Remove the D terminal lug that is attached to the spare sensor.

(g) Install the D terminal lug to the primary sensor.

ECCN 9E991 BOEING PROPRIETARY - See title page for details

LOM 465-999 (Continued)

(h) Apply a layer of Dow Corning 340 heat sink compound, D50244, to the terminals with the swab, G01659.

NOTE: The Dow Corning 340 heat sink compound, D50244, is intended to prevent inadvertent loss of insulation between the sensor terminals and the metal frame of the window, that can cause the window to overheat.

(i) Install the rubber terminal boot covers over the terminals as required.

1) Make sure that the rubber terminal boot covers are securely installed to avoid dislocation.

SUBTASK 30-41-21-760-008

(3) Do this test to measure the resistance of the spare sensors for the side windows (Table 503):

NOTE: This test applies to spare sensors with quick disconnect plugs.

(a) Remove the quick disconnect plugs from the channel.

(b) Disconnect the quick disconnect plug for the primary sensor.

(c) If it is necessary, examine the quick disconnect plugs for the primary sensor and spare sensor for corrosion and clean.

(d) Connect the quick disconnect plug for the spare sensor.

(e) Make sure that the resistance is within the limits (Figure 505).

(f) Disconnect the quick disconnect plug for the spare sensor and reconnect the quick disconnect plug to the primary sensor.

(g) Place the quick disconnect plugs back in the channel.

J. Put the Airplane Back to Its Usual Condition

SUBTASK 30-41-21-420-003

(1) Install the WHCU (TASK 30-41-11-400-803).

END OF TASK

ECCN 9E991 BOEING PROPRIETARY - See title page for details

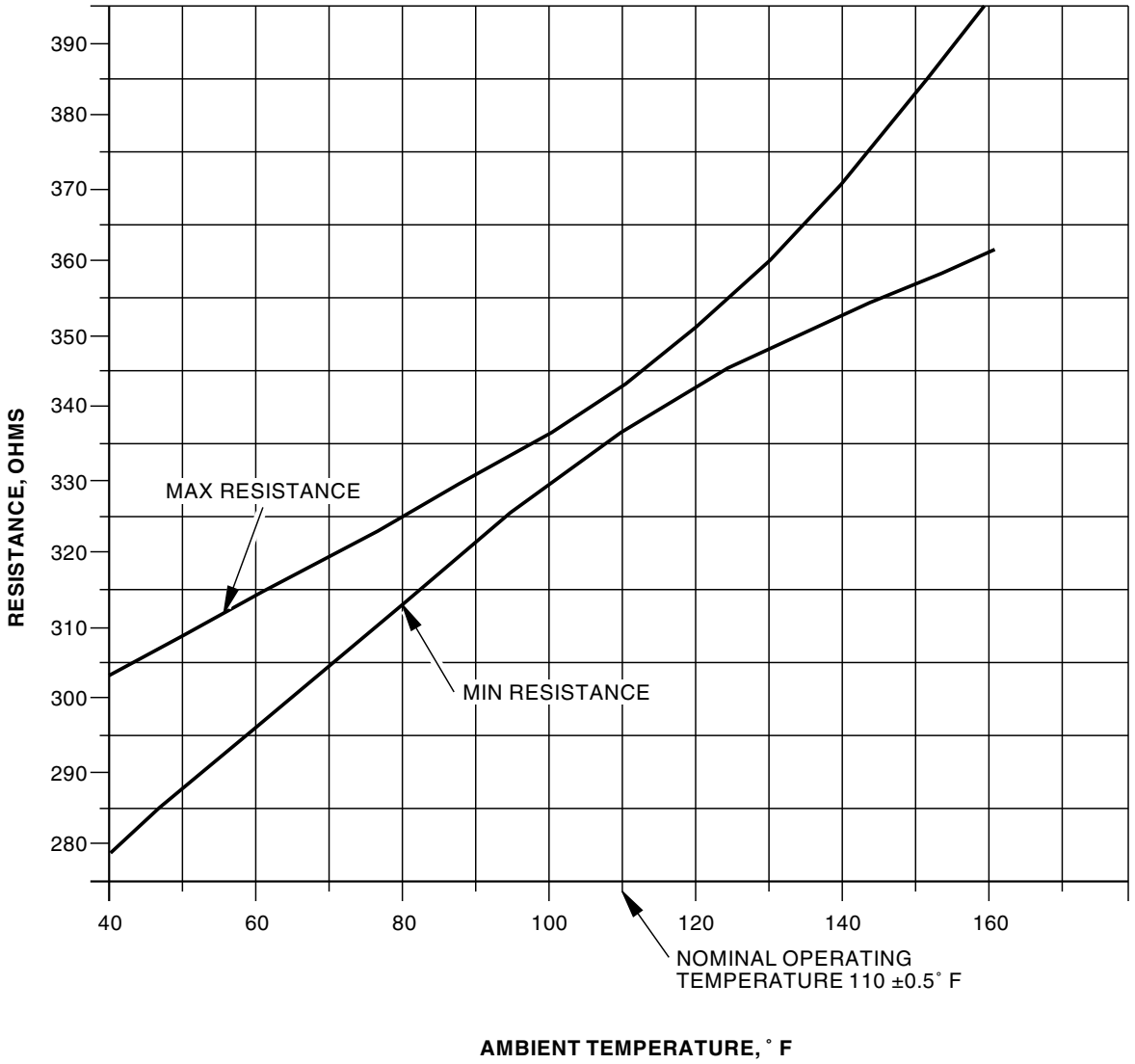

2433813 S0000563187_V1

Window Heat Control Sensor Resistance
Figure 505/30-41-21-990-805

ECCN 9E991 BOEING PROPRIETARY - See title page for details

TASK 30-41-21-700-801

6. **Measure the Insulation Resistance and Dielectric Absorption Ratio of the Control Cabin Windows** (Figure 506)

A. **General**

(1) This Predictive Maintenance & Enhanced Troubleshooting (PMET) procedure is optional and the results are for evaluation purposes only. No action is required as a result of this inspection if a flight deck effect or other observed fault does not exist. The recommendations are made to show Boeing's best practices to make sure that maximum aircraft reliability is reached. If a flight deck effect or other observed fault exists, it must be corrected with accepted procedures.

(2) This test measures the Insulation Resistance (IR) and Dielectric Absorption Rate (DAR) of the control cabin window heat sensors, conductive coating, and bus bars. A low dielectric insulation resistance value between the components in the window can cause the system to not operate correctly. A check of these values can help to monitor the health of the components in the window.

(3) This test only does a check of the sensor on the L2/R2 window that is connected to the system. To do a check of the spare sensor on the L2/R2 window, refer to WDM 30-41-11 or WDM 30-41-12 to change the connection of the sensor to the circuit.

B. **References**

Reference	Title
20-10-39-700-801	Insulation Resistance Testing - Special Detail Inspection (P/B 501)
24-22-00-860-811	Supply Electrical Power (P/B 201)
24-22-00-860-812	Remove Electrical Power (P/B 201)
25-11-21-000-801	Flight Compartment Forward Ceiling Panel Removal (P/B 201)
25-11-21-000-805	Flight Compartment Forward Ceiling Panel Removal (P/B 201)
30-41-11-000-803	Window Heat Control Unit (WHCU) Removal (P/B 401)
30-41-11-400-803	Window Heat Control Unit (WHCU) Installation (P/B 401)
30-41-11-710-801	Window Heat Control Unit System - Test (P/B 501)
WDM 30-41-11	Wiring Diagram Manual
WDM 30-41-12	Wiring Diagram Manual

C. **Tools/Equipment**

NOTE: When more than one tool part number is listed under the same "Reference" number, the tools shown are alternates to each other within the same airplane series. Tool part numbers that are replaced or non-procurable are preceded by "Opt:", which stands for Optional.

Reference	Description
COM-17798	Multimeter - Digital, Insulation Resistance Part #: 1004-745 Supplier: U0146 Part #: 1507 Supplier: 4U744 Part #: 1587 FC Supplier: 4U744 Part #: MIT2500 Supplier: U0146 Part #: MIT410/2 Supplier: U0146 Opt Part #: 1587 Supplier: 89536

ECCN 9E991 BOEING PROPRIETARY - See title page for details

LOM 465-999 (Continued)

D. Location Zones

Zone	Area
117	Electrical and Electronics Compartment - Left
118	Electrical and Electronics Compartment - Right
211	Flight Compartment - Left
212	Flight Compartment - Right

E. Access Panels

Number	Name/Location
117A	Electronic Equipment Access Door

F. Prepare for the Procedure

SUBTASK 30-41-21-860-006

(1) Remove electrical power from the aircraft (TASK 24-22-00-860-812).

SUBTASK 30-41-21-860-007

(2) Open these circuit breakers and install safety tags:

F/O Electrical System Panel, P6-11

Row	Col	Number	Name
B	8	C00393	WINDOW HEAT POWER RIGHT SIDE
B	9	C00228	WINDOW HEAT POWER LEFT FRONT

F/O Electrical System Panel, P6-12

Row	Col	Number	Name
B	8	C00394	WINDOW HEAT POWER RIGHT FRONT
B	9	C00392	WINDOW HEAT POWER LEFT SIDE

SUBTASK 30-41-21-010-011

(3) Open this access panel:

Number	Name/Location
117A	Electronic Equipment Access Door

SUBTASK 30-41-21-020-003

(4) Remove the applicable Window Heat Control Unit (WHCU) from the E2-1 or E4-2 Shelf (TASK 30-41-11-000-803).

SUBTASK 30-41-21-020-004

(5) In the control cabin, do these steps to disconnect the window ground bus:

(a) Remove the forward upper window lining panel [1] (TASK 25-11-21-000-801 or TASK 25-11-21-000-805).

(b) Remove ground bus terminal 1 [2] and ground bus terminal 2 [3] from the window.

SUBTASK 30-41-21-020-005

(6) Disconnect the coil cord (M2675) [4] at the sidewall panel connector [5] (D10564).

(a) Make sure that the coil cord stays attached to the window.

SUBTASK 30-41-21-020-006

(7) Disconnect the coil cord (M2675) [6] at the sidewall panel connector [7] (D10568).

(a) Make sure that the coil cord stays attached to the window.

ECCN 9E991 BOEING PROPRIETARY - See title page for details

LOM 465-999 (Continued)

G. Window Heat Insulation Resistance Check

SUBTASK 30-41-21-710-003

(1) Use the insulation resistance multimeter, COM-17798 or equivalent meter to do the IR and DAR test of the control cabin L2 and R2 windows (Insulation Resistance Testing - Special Detail Inspection, TASK 20-10-39-700-801):

NOTE: The Fluke multimeter will show an “ERR” message at the end of the test if the DAR value is more than 1.6.

NOTE: The Megger multimeter will show 3 horizontal lines on the display at the end of the test if the DAR value is more than 1.6.

(a) Do an IR check of the circuit insulation between the conductive coating and the sensor, and between the sensor and the Ground Bus Bar on the L2 and R2 windows:

1) Connect the insulation resistance multimeter, COM-17798 or equivalent meter to the first test point on Table 504.

2) Set the insulation resistance multimeter, COM-17798 or equivalent meter to 50 Volts Direct Current (VDC).

NOTE: This check makes sure that the circuits are isolated and there are no shorts.

3) Push the TEST button on the meter for a minimum of 15 seconds.

a) If the value shown on the meter is above 50 megohms, continue.

b) If the value is below 50 megohms, do a check of the wiring between the applicable M2675 coil cord assembly and the window:

<1> If the wiring is satisfactory, replace the applicable window.

4) Do the check again at each point shown in Table 504.

a) Do not record the values found.

(b) Do an IR check of the circuit insulation between the conductive coating and the sensor, and between the sensor and the Ground Bus Bar on the L2 and R2 windows:

1) Connect the insulation resistance multimeter, COM-17798 or equivalent meter to the first test point on Table 504.

2) Set the insulation resistance multimeter, COM-17798 or equivalent meter to 500 VDC.

3) Push the TEST button on the meter for a minimum 10 seconds.

4) Record the resistance value found in Table 504.

5) Do the check again at each point shown in Table 504.

(c) Do a DAR check between the conductive coating and the sensor, and between the sensor and the Ground Bus Bar on the L2 and R2 windows:

1) Select the VDC function on the insulation resistance multimeter, COM-17798 or equivalent meter.

2) Set the insulation resistance multimeter, COM-17798 or equivalent meter to 500 VDC.

3) Push the TEST button on the insulation resistance multimeter, COM-17798 or equivalent meter.

4) Record the resistance value found in Table 504.

ECCN 9E991 BOEING PROPRIETARY - See title page for details

LOM 465-999 (Continued)

5) Do the check again at each point shown in Table 504.

Table 504/30-41-21-993-812 L2/R2 Window IR and DAR Values

Test Point	Control Unit	Connector	Measurement	Negative Lead	Positive Lead	IR Value	DAR Value
1	Left Side	M2675	Sensor to Film	1	4		
2	Left Side	M2675	Sensor to Ground	Ground	1		
3	Left Side	M2675	Film to Ground	Ground	4		
4	Right Side	M2675	Sensor to Film	1	4		
5	Right Side	M2675	Sensor to Ground	Ground	1		
6	Right Side	M2675	Film to Ground	Ground	4		

SUBTASK 30-41-21-710-002

(2) Use the insulation resistance multimeter, COM-17798 or equivalent meter to do the IR and DAR test of the control cabin L1 and R1 windows (Insulation Resistance Testing - Special Detail Inspection, TASK 20-10-39-700-801):

NOTE: The Fluke multimeter will show an “ERR” message at the end of the test if the DAR value is more than 1.6.

NOTE: The Megger multimeter will show 3 horizontal lines on the display at the end of the test if the DAR value is more than 1.6.

(a) Do an IR check of the circuit insulation between the conductive coating and the sensor, and between the sensor and the Ground Bus Bar on the L1 and R1 windows:

1) Connect the insulation resistance multimeter, COM-17798 or equivalent meter to the first test point on Table 505.

2) Set the insulation resistance multimeter, COM-17798 or equivalent meter to 50 VDC.

NOTE: This check makes sure that the circuits are isolated and there are no shorts.

3) Push the TEST button on the meter for a minimum of 15 seconds.

a) If the value shown on the meter is above 50 megohms, continue.

b) If the value is below 50 megohms, do a check of the wiring between coil cord (D10562) [8] (coil cord (D10562) [9]) and the applicable window:

<1> If the wiring is satisfactory, replace the applicable window.

4) Do the check again at each point shown in Table 505.

a) Do not record the values found.

(b) Do an IR check of the circuit insulation between the conductive coating and the sensor tap, and between the Sensor and the Ground Bus Bar on the L1 and R1 windows:

1) Connect the insulation resistance multimeter, COM-17798 or equivalent meter to the first test point on Table 505.

2) Set the insulation resistance multimeter, COM-17798 or equivalent meter to 500 VDC.

3) Push the TEST button on the meter for a minimum 10 seconds.

4) Record the resistance value found in Table 505.

5) Do the check again at each point shown in Table 505.

ECCN 9E991 BOEING PROPRIETARY - See title page for details

LOM 465-999 (Continued)

(c) Do a DAR check between the conductive coating and the sensor tap, and between the Sensor and the Ground Bus Bar on the L1 and R1 windows:

1) Connect the insulation resistance multimeter, COM-17798 or equivalent meter to the first test point on Table 505.

2) Select the DAR function on the insulation resistance multimeter, COM-17798 or equivalent meter.

3) Set the insulation resistance multimeter, COM-17798 or equivalent meter to 500 VDC.

4) Push the TEST button on the insulation resistance multimeter, COM-17798 or equivalent meter.

5) Record the resistance value found in Table 505.

6) Do the check again at each point shown in Table 505.

Table 505/30-41-21-993-813 L1/R1 Window IR and DAR values

Test Point	Control Unit	Connector	Measurement	Negative Lead	Positive Lead	IR Value	DAR Value
1	Right Front	D16232	Primary Sensor to Film	1	19		
2	Right Front	D16232	Spare Sensor to Film	1	27		
3	Right Front	D16232	Primary Sensor to Ground	Ground	19		
4	Right Front	D16232	Spare Sensor to Ground	Ground	28		
5	Right Front	D16232	Film to Ground	Ground	1		
6	Left Front	D16230	Primary Sensor to Film	1	19		
7	Left Front	D16230	Spare Sensor to Film	1	27		
8	Left Front	D16230	Film to Ground	Ground	1		
9	Left Front	D16230	Primary Sensor to Ground	Ground	19		
10	Left Front	D16230	Spare Sensor to Ground	Ground	27		

SUBTASK 30-41-21-710-004

(3) Examine the test results recorded in Table 504 and Table 505:

(a) If the measured IR value is less than 50 megohms and/or the DAR is less than 1.0, the replacement of the window at the next satisfactory maintenance input is recommended.

(b) If the measured IR value is between 50 megohms and 200 megohms and/or the DAR was 1.0 or more, a check of the window at the next satisfactory maintenance input is recommended.

(c) If all results are more than the recommended values of more than 200 megohms and/or more than 1.3 DAR, then no more work is necessary.

H. Put the Airplane Back to Its Usual Condition

SUBTASK 30-41-21-840-004

(1) Disconnect insulation resistance multimeter, COM-17798 or equivalent meter.

SUBTASK 30-41-21-420-006

(2) Connect the coil cord (M2675) [6] to the sidewall panel connector [7] (D10568).

ECCN 9E991 BOEING PROPRIETARY - See title page for details

LOM 465-999 (Continued)

SUBTASK 30-41-21-420-007

(3) Connect the coil cord (M2675) [4] to the sidewall panel connector [5] (D10564).

SUBTASK 30-41-21-420-008

(4) Install the applicable WHCU(s) (TASK 30-41-11-400-803).

SUBTASK 30-41-21-420-014

(5) Connect the ground bus terminal 1 [2] and ground bus terminal 2 [3] to the window.

SUBTASK 30-41-21-860-005

(6) Remove the safety tags and close these circuit breakers:

F/O Electrical System Panel, P6-11

Row	Col	Number	Name
B	8	C00393	WINDOW HEAT POWER RIGHT SIDE
B	9	C00228	WINDOW HEAT POWER LEFT FRONT

F/O Electrical System Panel, P6-12

Row	Col	Number	Name
B	8	C00394	WINDOW HEAT POWER RIGHT FRONT
B	9	C00392	WINDOW HEAT POWER LEFT SIDE

SUBTASK 30-41-21-410-004

(7) Close this access panel:

Number	Name/Location
117A	Electronic Equipment Access Door

SUBTASK 30-41-21-860-004

(8) Do this task: Supply Electrical Power, TASK 24-22-00-860-811.

SUBTASK 30-41-21-710-001

(9) Do the WHCU installation test (TASK 30-41-11-400-803).

SUBTASK 30-41-21-730-001

(10) Do this task: Window Heat Control Unit System - Test, TASK 30-41-11-710-801.

END OF TASK

ECCN 9E991 BOEING PROPRIETARY - See title page for details

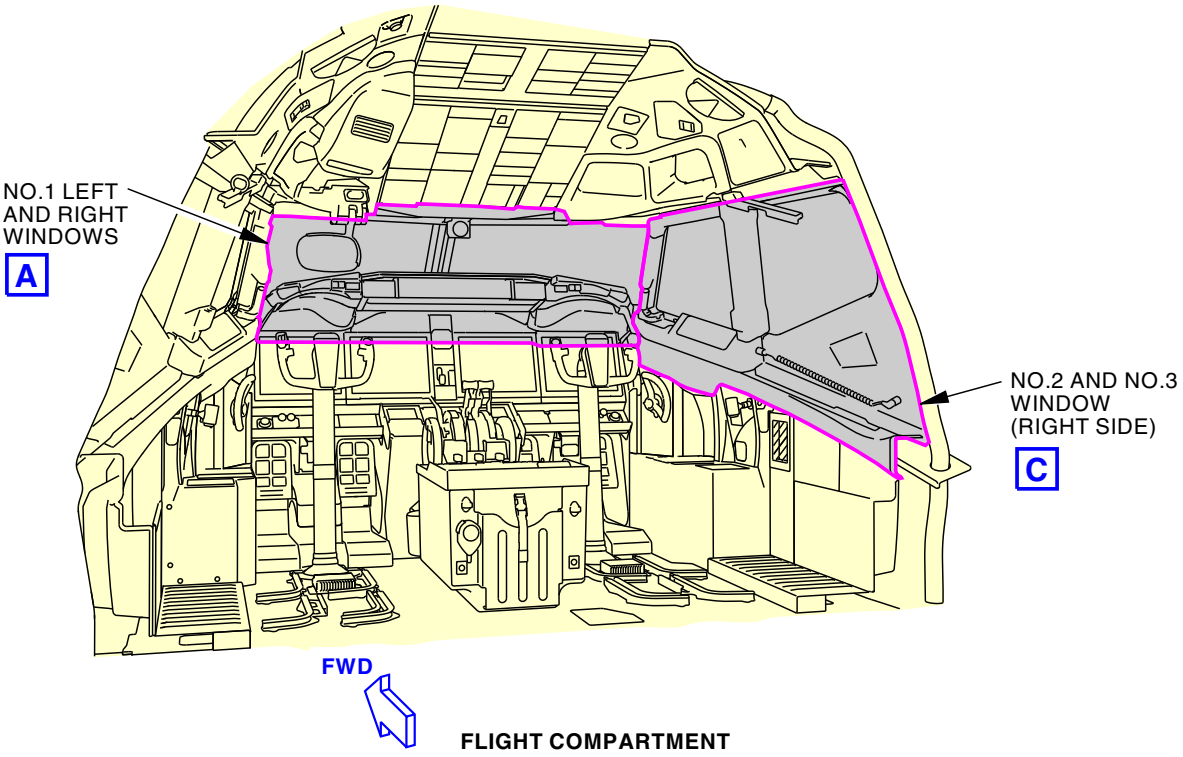

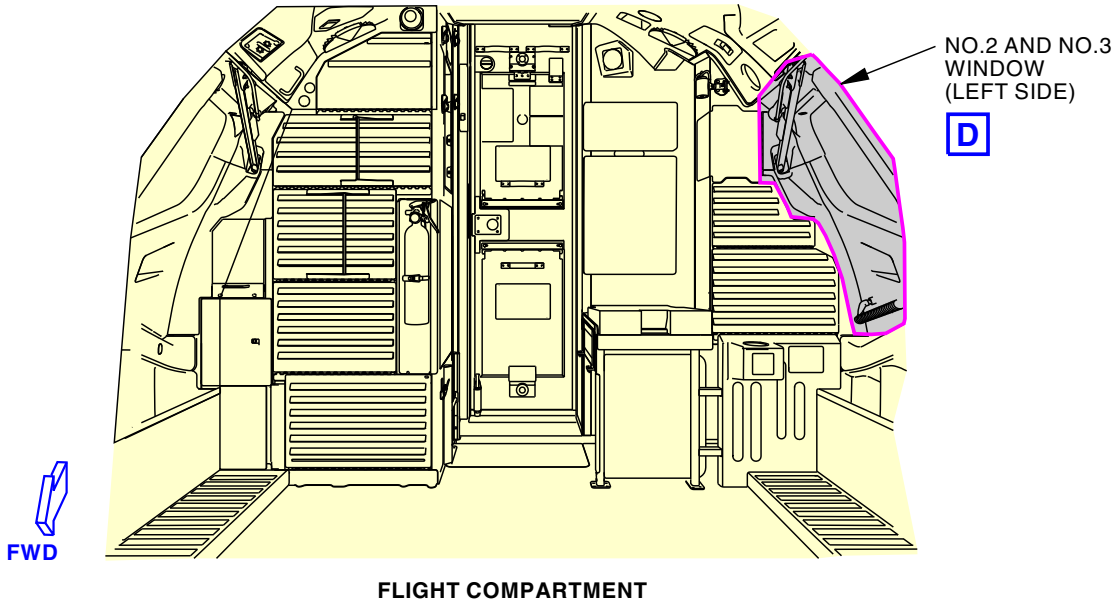

3045431 S0000811950_V1

Window Heat Insulation Resistance Check
Figure 506/30-41-21-990-806 (Sheet 1 of 5)

ECCN 9E991 BOEING PROPRIETARY - See title page for details

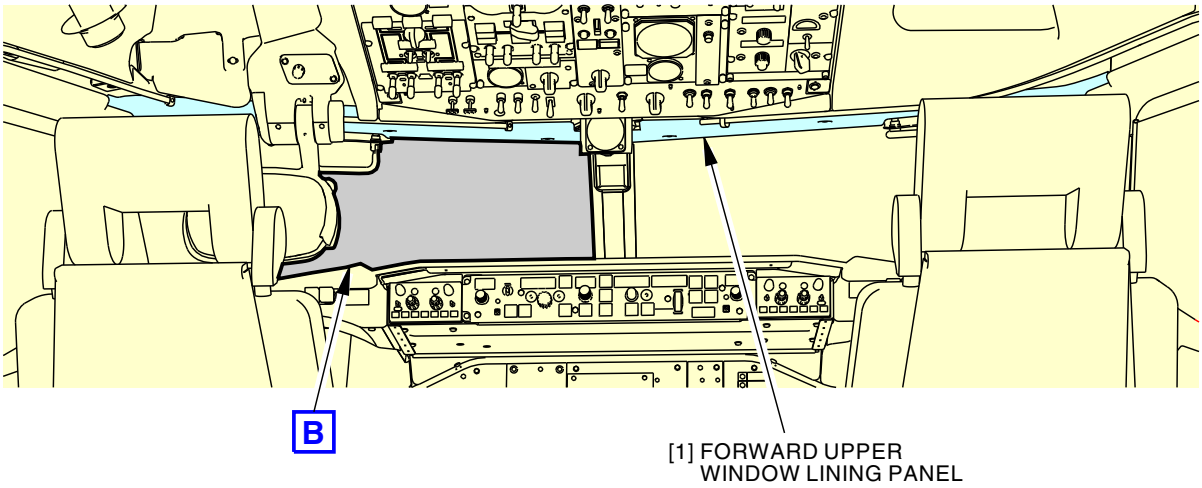

NO.1 LEFT AND RIGHT WINDOWS

A

3045432 S0000811952_V1

Window Heat Insulation Resistance Check
Figure 506/30-41-21-990-806 (Sheet 2 of 5)

ECCN 9E991 BOEING PROPRIETARY - See title page for details

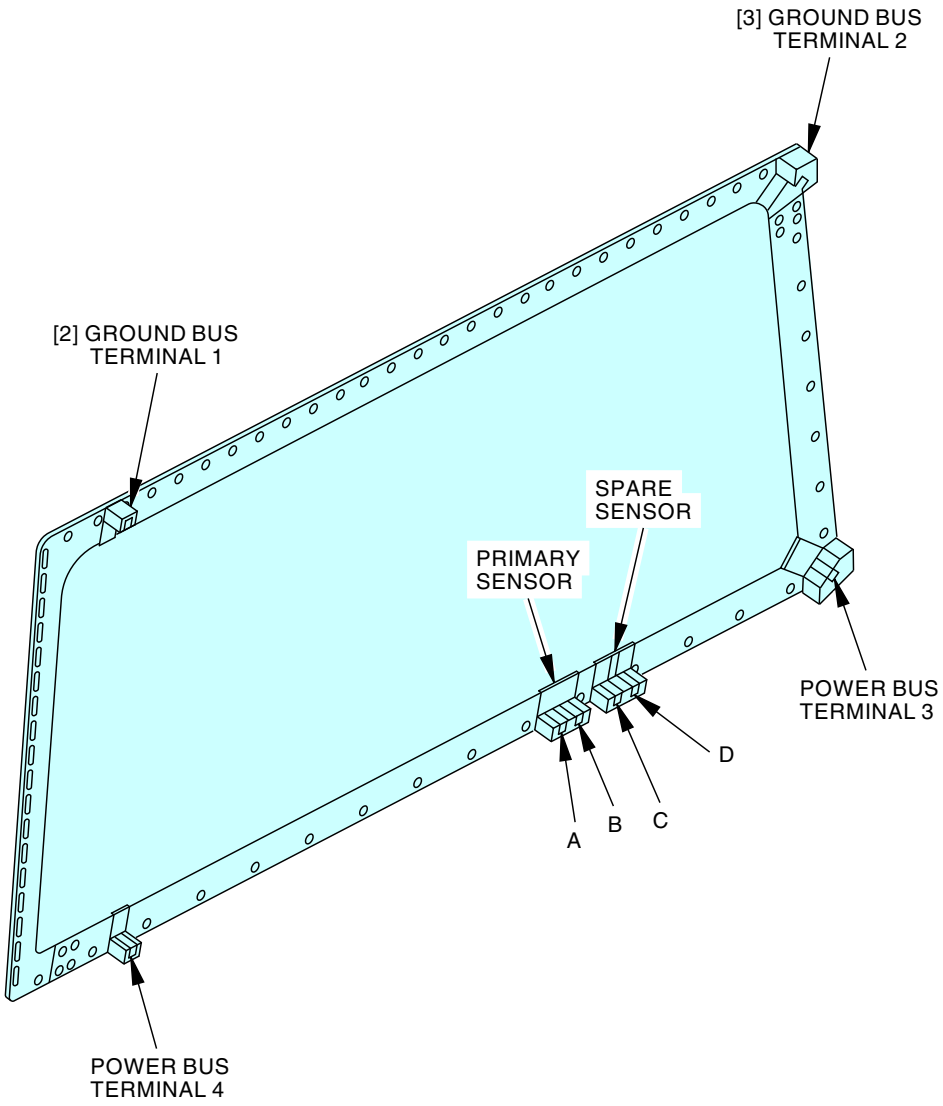

**(NO. 1 PILOT'S WINDSHIELD SHOWN,
NO. 1 CO-PILOT'S WINDSHIELD OPPOSITE)**

B

3045433 S0000811953_V1

**Window Heat Insulation Resistance Check
Figure 506/30-41-21-990-806 (Sheet 3 of 5)**

ECCN 9E991 BOEING PROPRIETARY - See title page for details

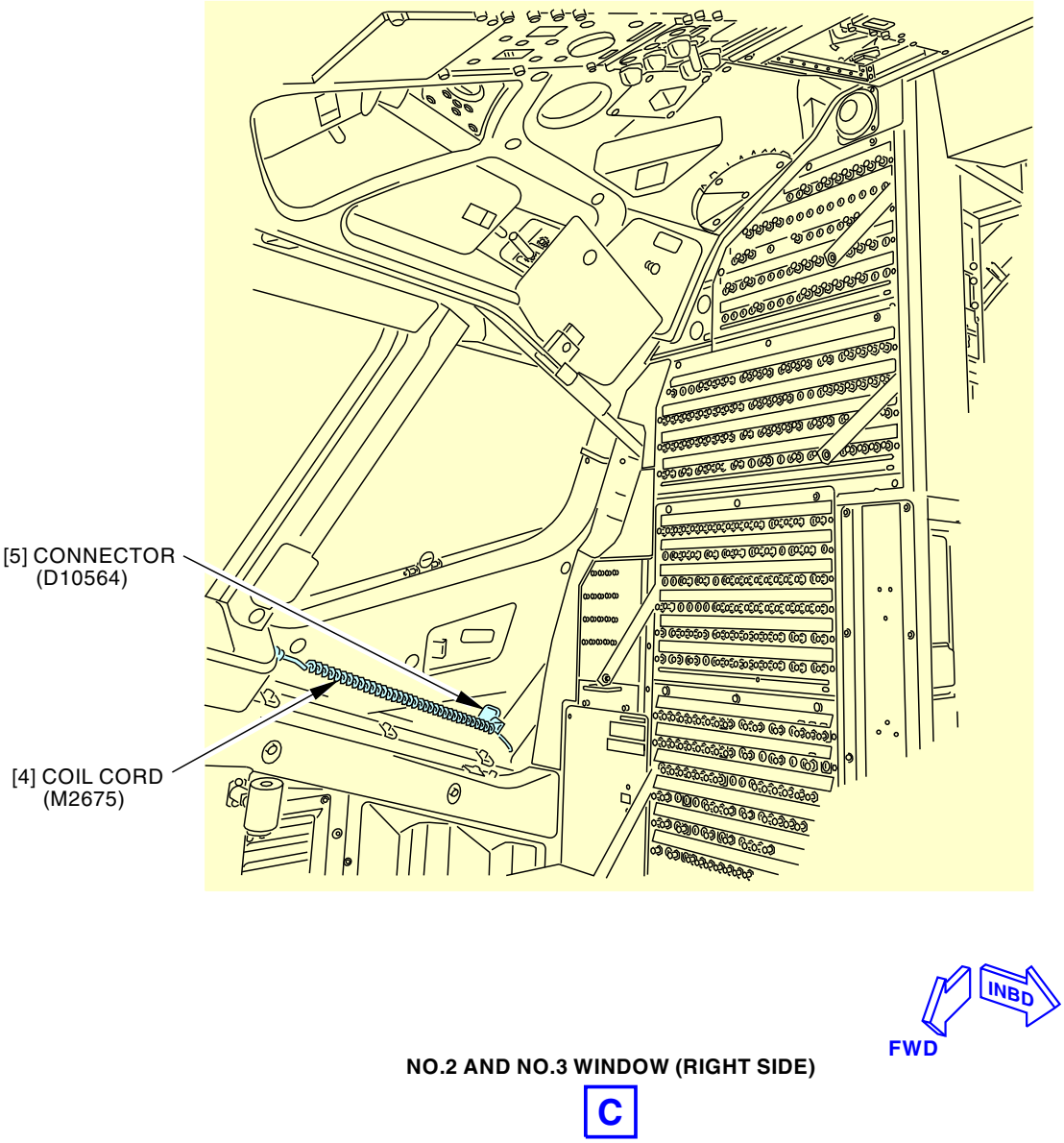

3045434 S0000811954_V1

Window Heat Insulation Resistance Check
Figure 506/30-41-21-990-806 (Sheet 4 of 5)

ECCN 9E991 BOEING PROPRIETARY - See title page for details

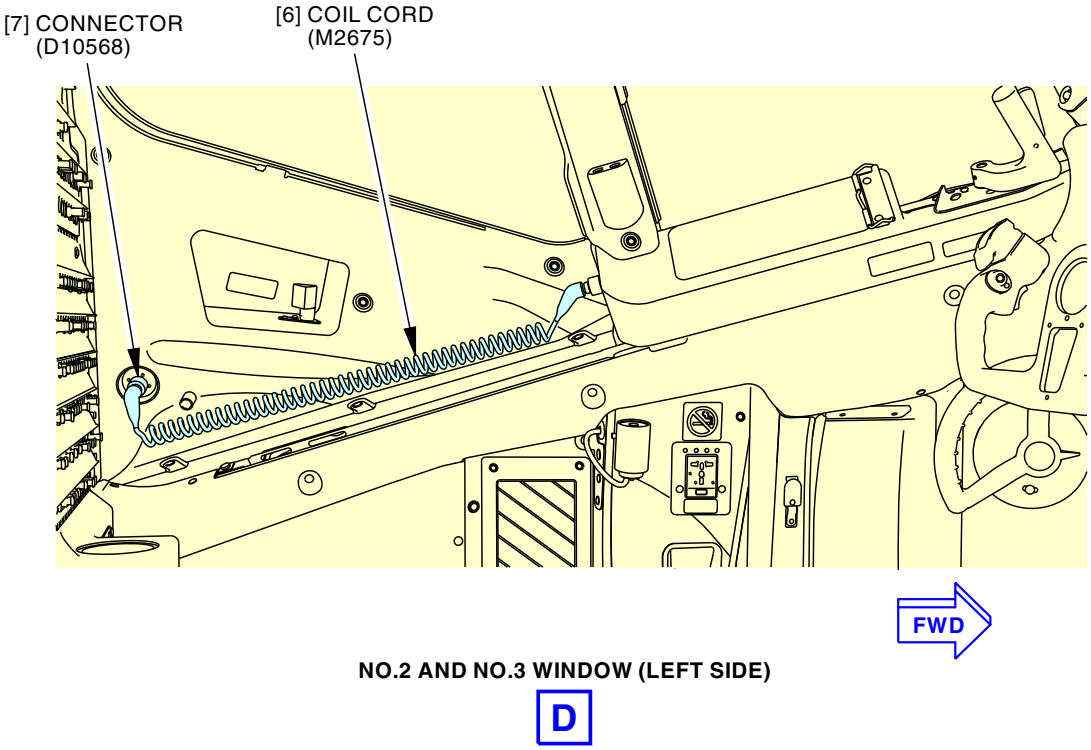

3045435 S0000811955_V1

Window Heat Insulation Resistance Check
Figure 506/30-41-21-990-806 (Sheet 5 of 5)

ECCN 9E991 BOEING PROPRIETARY - See title page for details

TASK 30-41-21-700-802

7. Measure the Insulation Resistance and Dielectric Absorption Ratio of the Control Cabin Windows (Figure 507)

A. General

(1) This test measures the Insulation Resistance (IR) and Dielectric Absorption Rate (DAR) of the control cabin window heat sensors, conductive coating, and bus bars. A low dielectric insulation resistance value between the components in the window can cause the system to not operate correctly. A check of these values can help to monitor the health of the components in the window.

(2) This test only does a check of the sensor on the L2/R2 window that is connected to the system. To do a check of the spare sensor on the L2/R2 window, refer to WDM 30-41-11 or WDM 30-41-12 to change the connection of the sensor to the circuit.

B. References

Reference	Title
20-10-39-700-801	Insulation Resistance Testing - Special Detail Inspection (P/B 501)
24-22-00-860-811	Supply Electrical Power (P/B 201)
24-22-00-860-812	Remove Electrical Power (P/B 201)
25-11-21-000-801	Flight Compartment Forward Ceiling Panel Removal (P/B 201)
25-11-21-000-805	Flight Compartment Forward Ceiling Panel Removal (P/B 201)
30-41-11-000-801	Window Heat Control Unit (WHCU) Removal (P/B 401)
30-41-11-400-801	Window Heat Control Unit (WHCU) Installation (P/B 401)
30-41-11-710-801	Window Heat Control Unit System - Test (P/B 501)
WDM 30-41-11	Wiring Diagram Manual
WDM 30-41-12	Wiring Diagram Manual

C. Tools/Equipment

NOTE: When more than one tool part number is listed under the same "Reference" number, the tools shown are alternates to each other within the same airplane series. Tool part numbers that are replaced or non-procurable are preceded by "Opt:", which stands for Optional.

Reference	Description
COM-17798	Multimeter - Digital, Insulation Resistance Part #: 1004-745 Supplier: U0146 Part #: 1507 Supplier: 4U744 Part #: 1587 FC Supplier: 4U744 Part #: MIT2500 Supplier: U0146 Part #: MIT410/2 Supplier: U0146 Opt Part #: 1587 Supplier: 89536

D. Location Zones

Zone	Area
117	Electrical and Electronics Compartment - Left
118	Electrical and Electronics Compartment - Right
211	Flight Compartment - Left
212	Flight Compartment - Right

ECCN 9E991 BOEING PROPRIETARY - See title page for details

E. Access Panels

Number	Name/Location
117A	Electronic Equipment Access Door

F. Prepare for the Procedure

SUBTASK 30-41-21-860-008

(1) Remove electrical power from the aircraft (TASK 24-22-00-860-812).

SUBTASK 30-41-21-860-009

(2) Open these circuit breakers and install safety tags:

F/O Electrical System Panel, P6-11

Row	Col	Number	Name
B	8	C00393	WINDOW HEAT POWER RIGHT SIDE
B	9	C00228	WINDOW HEAT POWER LEFT FRONT

F/O Electrical System Panel, P6-12

Row	Col	Number	Name
B	8	C00394	WINDOW HEAT POWER RIGHT FRONT
B	9	C00392	WINDOW HEAT POWER LEFT SIDE

SUBTASK 30-41-21-010-012

(3) Open this access panel:

Number	Name/Location
117A	Electronic Equipment Access Door

SUBTASK 30-41-21-020-010

(4) Remove the applicable Window Heat Control Unit (WHCU) from the E2-1 or E4-2 Shelf (TASK 30-41-11-000-801).

SUBTASK 30-41-21-020-011

(5) In the control cabin, do these steps to disconnect the window ground bus:

(a) Remove the forward upper window lining panel [1] (TASK 25-11-21-000-801 or TASK 25-11-21-000-805).

(b) Remove ground bus terminal 1 [2] and ground bus terminal 2 [3] from the window.

LOM 402, 407, 411, 412, 415, 416, 420, 422-434, 437-447, 450-464; LOM 404, 406 POST SB 737-30-1058

SUBTASK 30-41-21-020-012

(6) Disconnect the coil cord (M2675) [4] at the sidewall panel connector [5] (D10564).

(a) Make sure that the coil cord stays attached to the window.

SUBTASK 30-41-21-020-009

(7) Disconnect the coil cord (M2675) [6] at the sidewall panel connector [7] (D10568).

(a) Make sure that the coil cord stays attached to the window.

LOM 404, 406 PRE SB 737-30-1058

SUBTASK 30-41-21-020-008

(8) Disconnect the coil cord (D10562) [8] at the sidewall panel connector [5] (D10564).

(a) Make sure that the coil cord stays attached to the window.

ECCN 9E991 BOEING PROPRIETARY - See title page for details

LOM 404, 406 PRE SB 737-30-1058 (Continued)

SUBTASK 30-41-21-020-007

(9) Disconnect the coil cord (D10562) [9] at the sidewall panel connector [7] (D10568).

(a) Make sure that the coil cord stays attached to the window.

LOM 402, 404, 406, 407, 411, 412, 415, 416, 420, 422-434, 437-447, 450-464

G. Window Heat Insulation Resistance Check

LOM 402, 407, 411, 412, 415, 416, 420, 422-434, 437-447, 450-464; LOM 404, 406 POST SB 737-30-1058

SUBTASK 30-41-21-710-005

(1) Use the insulation resistance multimeter, COM-17798 or equivalent meter to do the IR and DAR test of the control cabin L2 and R2 windows (Insulation Resistance Testing - Special Detail Inspection, TASK 20-10-39-700-801):

NOTE: The Fluke multimeter will show an “ERR” message at the end of the test if the DAR value is more than 1.6.

NOTE: The Megger multimeter will show 3 horizontal lines on the display at the end of the test if the DAR value is more than 1.6.

(a) Do an IR check of the circuit insulation between the conductive coating and the sensor, and between the sensor and the ground bus bar on the L2 and R2 windows:

1) Connect the insulation resistance multimeter, COM-17798 or equivalent meter to the first test point on Table 506.

2) Set the insulation resistance multimeter, COM-17798 or equivalent meter to 50 Volts Direct Current (VDC).

NOTE: This check makes sure that the circuits are isolated and there are no shorts.

3) Push the TEST button on the meter for a minimum of 15 seconds.

a) If the value shown on the meter is above 50 megohms, continue.

b) If the value is below 50 megohms, do a check of the wiring between the applicable M2675 coil cord assembly and the window:

<1> If the wiring is satisfactory, replace the applicable window.

4) Do the check again at each point shown in Table 506.

a) Do not record the values found.

(b) Do an IR check of the circuit insulation between the conductive coating and the sensor, and between the sensor and the ground bus bar on the L2 and R2 windows:

1) Connect the insulation resistance multimeter, COM-17798 or equivalent meter to the first test point on Table 506.

2) Set the insulation resistance multimeter, COM-17798 or equivalent meter to 500 VDC.

3) Push the TEST button on the meter for a minimum 10 seconds.

4) Record the resistance value found in Table 506.

5) Do the check again at each point shown in Table 506.

(c) Do a DAR check between the conductive coating and the sensor, and between the sensor and the ground bus bar on the L2 and R2 windows:

1) Select the DAR function on the insulation resistance multimeter, COM-17798 or equivalent meter.

ECCN 9E991 BOEING PROPRIETARY - See title page for details

2) Set the insulation resistance multimeter, COM-17798 or equivalent meter to 500 VDC.

3) Push the TEST button on the insulation resistance multimeter, COM-17798 or equivalent meter.

4) Record the resistance value found in Table 506.

5) Do the check again at each point shown in Table 506.

Table 506/30-41-21-993-810 L2/R2 Window IR and DAR Values

Test point	Control Unit	Connector	Measurement	Negative Lead	Positive Lead	IR Value	DAR Value
1	Left Side	M2675	Sensor to Film	1	4		
2	Left Side	M2675	Sensor to Ground	Ground	1		
3	Left Side	M2675	Film to Ground	Ground	4		
4	Right Side	M2675	Sensor to Film	1	4		
5	Right Side	M2675	Sensor to Ground	Ground	1		
6	Right Side	M2675	Film to Ground	Ground	4		

LOM 404, 406 PRE SB 737-30-1058

SUBTASK 30-41-21-710-007

(2) Use the insulation resistance multimeter, COM-17798 or equivalent meter to do the IR and DAR test of the control cabin L2 and R2 windows (Insulation Resistance Testing - Special Detail Inspection, TASK 20-10-39-700-801):

NOTE: The Fluke multimeter will show an “ERR” message at the end of the test if the DAR value is more than 1.6.

NOTE: The Megger multimeter will show 3 horizontal lines on the display at the end of the test if the DAR value is more than 1.6.

(a) Do an IR check of the circuit insulation between the conductive coating and the sensor, and between the sensor and the ground bus bar on the L2 and R2 windows:

1) Connect the insulation resistance multimeter, COM-17798 or equivalent meter to the first test point on Table 507.

2) Set the insulation resistance multimeter, COM-17798 or equivalent meter to 50 VDC.

NOTE: This check makes sure that the circuits are isolated and there are no shorts.

3) Push the TEST button on the meter for a minimum of 15 seconds.

a) If the value shown on the meter is above 50 megohms, continue.

b) If the value is below 50 megohms, do a check of the wiring between coil cord (D10562) [8] (coil cord (D10562) [9]) and the applicable window:

<1> If the wiring is satisfactory, replace the applicable window.

4) Do the check again at each point shown in Table 507.

a) Do not record the values found.

(b) Do an IR check of the circuit insulation between the conductive coating and the sensor, and between the sensor and the ground bus bar on the L2 and R2 windows:

ECCN 9E991 BOEING PROPRIETARY - See title page for details

LOM 404, 406 PRE SB 737-30-1058 (Continued)

1) Connect the insulation resistance multimeter, COM-17798 or equivalent meter to the first test point on Table 507.
2) Set the insulation resistance multimeter, COM-17798 or equivalent meter to 500 VDC.
3) Push the TEST button on the meter for a minimum 10 seconds.
4) Record the resistance value found in Table 507.
5) Do the check again at each point shown in Table 507.

(c) Do a DAR check between the conductive coating and the sensor, and between the sensor and the ground bus bar on the L2 and R2 windows:

1) Select the DAR function on the insulation resistance multimeter, COM-17798 or equivalent meter.
2) Set the insulation resistance multimeter, COM-17798 or equivalent meter to 500 VDC.
3) Push the TEST button on the insulation resistance multimeter, COM-17798 or equivalent meter.
4) Record the resistance value found in Table 507.
5) Do the check again at each point shown in Table 507.

Table 507/30-41-21-993-809 L2/R2 Window IR and DAR Values

Test point	Control Unit	Connector	Measurement	Negative Lead	Positive Lead	IR Value	DAR Value
1	Left Side	D10562	Sensor to Film	1	4		
2	Left Side	D10562	Sensor to Ground	Ground	1		
3	Left Side	D10562	Film to Ground	Ground	4		
4	Right Side	D10562	Sensor to Film	1	4		
5	Right Side	D10562	Sensor to Ground	Ground	1		
6	Right Side	D10562	Film to Ground	Ground	4		

LOM 402, 404, 406, 407, 411, 412, 415, 416, 420, 422-434, 437-447, 450-464

SUBTASK 30-41-21-710-008

(3) Use the insulation resistance multimeter, COM-17798 or equivalent meter to do the IR and DAR test of the control cabin L1 and R1 windows (Insulation Resistance Testing - Special Detail Inspection, TASK 20-10-39-700-801):

NOTE: The Fluke multimeter will show an “ERR” message at the end of the test if the DAR value is more than 1.6.

NOTE: The Megger multimeter will show 3 horizontal lines on the display at the end of the test if the DAR value is more than 1.6.

(a) Do an IR check of the circuit insulation between the conductive coating and the sensor, and between the sensor and the ground bus bar on the L1 and R1 windows:

1) Connect the insulation resistance multimeter, COM-17798 or equivalent meter to the first test point on Table 508.

ECCN 9E991 BOEING PROPRIETARY - See title page for details

2) Set the insulation resistance multimeter, COM-17798 or equivalent meter to 50 VDC.

NOTE: This check makes sure that the circuits are isolated and there are no shorts.

3) Push the TEST button on the meter for a minimum of 15 seconds.

a) If the value shown on the meter is above 50 megohms, continue.

b) If the value is below 50 megohms, do a check of the wiring between the applicable WHCU and the window:

<1> If the wiring is satisfactory, replace the applicable window.

4) Do the check again at each point shown in Table 508.

a) Do not record the values found.

(b) Do an IR check of the circuit insulation between the conductive coating and the sensor tap, and between the sensor and the ground bus bar on the L1 and R1 windows:

1) Connect the insulation resistance multimeter, COM-17798 or equivalent meter to the first test point on Table 508.

2) Set the insulation resistance multimeter, COM-17798 or equivalent meter to 500 VDC.

3) Push the TEST button on the meter for a minimum 10 seconds.

4) Record the resistance value found in Table 508.

5) Do the check again at each test point shown in Table 508.

(c) Do a DAR check between the conductive coating and the sensor tap, and between the sensor and the ground bus bar on the L1 and R1 windows:

1) Connect the insulation resistance multimeter, COM-17798 or equivalent meter to the first test point on Table 508.

2) Select the DAR function on the insulation resistance multimeter, COM-17798 or equivalent meter.

3) Set the insulation resistance multimeter, COM-17798 or equivalent meter to 500 VDC.

4) Push the TEST button on the insulation resistance multimeter, COM-17798 or equivalent meter.

5) Record the resistance value found in Table 508.

6) Do the check again at each point shown in Table 508.

Table 508/30-41-21-993-811 L1/R1 Window IR and DAR values

Test Point	Control Unit	Connector	Measurement	Negative Lead	Positive Lead	IR Value	DAR Value
1	Right Front	D1048A	Sensor to Film	Tap	13		
2	Right Front	D1048A	Sensor to Ground	Ground	13		
3	Right Front	D1048A	Film to Ground	Ground	Tap		
4	Left Front	D1044A	Sensor to Film	Tap	13		
5	Left Front	D1044A	Film to Ground	Ground	Tap		

ECCN 9E991 BOEING PROPRIETARY - See title page for details

LOM 402, 404, 406, 407, 411, 412, 415, 416, 420, 422-434, 437-447, 450-464 (Continued)

Table 508/30-41-21-993-811 L1/R1 Window IR and DAR values (Continued)

6	Left Front	D1044A	Sensor to Ground	Ground	13		

LOM 402, 407, 411, 412, 415, 416, 420, 422-434, 437-447, 450-464; LOM 404, 406 POST SB 737-30-1058

SUBTASK 30-41-21-710-010

(4) Examine the test results recorded in Table 506 and Table 508:

(a) If the measured IR value is less than 50 megohms and/or the DAR is less than 1.0, the replacement of the window at the next satisfactory maintenance input is recommended.

(b) If the measured IR value is between 50 megohms and 200 megohms and/or the DAR was 1.0 or more, a check of the window at the next satisfactory maintenance input is recommended.

(c) If all results are more than the recommended values of more than 50 megohms and/or more than 1.3 DAR, then no more work is necessary.

LOM 404, 406 PRE SB 737-30-1058

SUBTASK 30-41-21-710-006

(5) Examine the test results recorded in Table 507 and Table 508:

(a) If the measured IR value is less than 50 megohms and/or the DAR is less than 1.0, the replacement of the window at the next satisfactory maintenance input is recommended.

(b) If the measured IR value is between 50 megohms and 200 megohms and/or the DAR was 1.0 or more, a check of the window at the next satisfactory maintenance input is recommended.

(c) If all results are more than the recommended values of more than 50 megohms and/or more than 1.3 DAR, then no more work is necessary.

LOM 402, 404, 406, 407, 411, 412, 415, 416, 420, 422-434, 437-447, 450-464

H. Put the Airplane Back to Its Usual Condition

SUBTASK 30-41-21-840-005

(1) Disconnect insulation resistance multimeter, COM-17798 or equivalent meter.

LOM 402, 407, 411, 412, 415, 416, 420, 422-434, 437-447, 450-464; LOM 404, 406 POST SB 737-30-1058

SUBTASK 30-41-21-420-009

(2) Connect the coil cord (M2675) [6] to the sidewall panel connector [7] (D10568).

SUBTASK 30-41-21-420-010

(3) Connect the coil cord (M2675) [4] to the sidewall panel connector [5] (D10564).

LOM 404, 406 PRE SB 737-30-1058

SUBTASK 30-41-21-420-011

(4) Connect the coil cord (D10562) [9] to the sidewall panel connector [7] (D10568).

SUBTASK 30-41-21-420-012

(5) Connect the coil cord (D10562) [8] to the sidewall panel connector [5] (D10564).

LOM 402, 404, 406, 407, 411, 412, 415, 416, 420, 422-434, 437-447, 450-464

ECCN 9E991 BOEING PROPRIETARY - See title page for details

SUBTASK 30-41-21-420-013

(6) Install the applicable WHCU(s) (TASK 30-41-11-400-801).

SUBTASK 30-41-21-860-011

(7) Remove the safety tags and close these circuit breakers:

F/O Electrical System Panel, P6-11

Row	Col	Number	Name
B	8	C00393	WINDOW HEAT POWER RIGHT SIDE
B	9	C00228	WINDOW HEAT POWER LEFT FRONT

F/O Electrical System Panel, P6-12

Row	Col	Number	Name
B	8	C00394	WINDOW HEAT POWER RIGHT FRONT
B	9	C00392	WINDOW HEAT POWER LEFT SIDE

SUBTASK 30-41-21-410-005

(8) Close this access panel:

Number	Name/Location
117A	Electronic Equipment Access Door

SUBTASK 30-41-21-860-010

(9) Do this task: Supply Electrical Power, TASK 24-22-00-860-811.

SUBTASK 30-41-21-710-009

(10) Do the WHCU installation test (TASK 30-41-11-400-801).

SUBTASK 30-41-21-730-002

(11) Do this task: Window Heat Control Unit System - Test, TASK 30-41-11-710-801.

——— END OF TASK ———

ECCN 9E991 BOEING PROPRIETARY - See title page for details

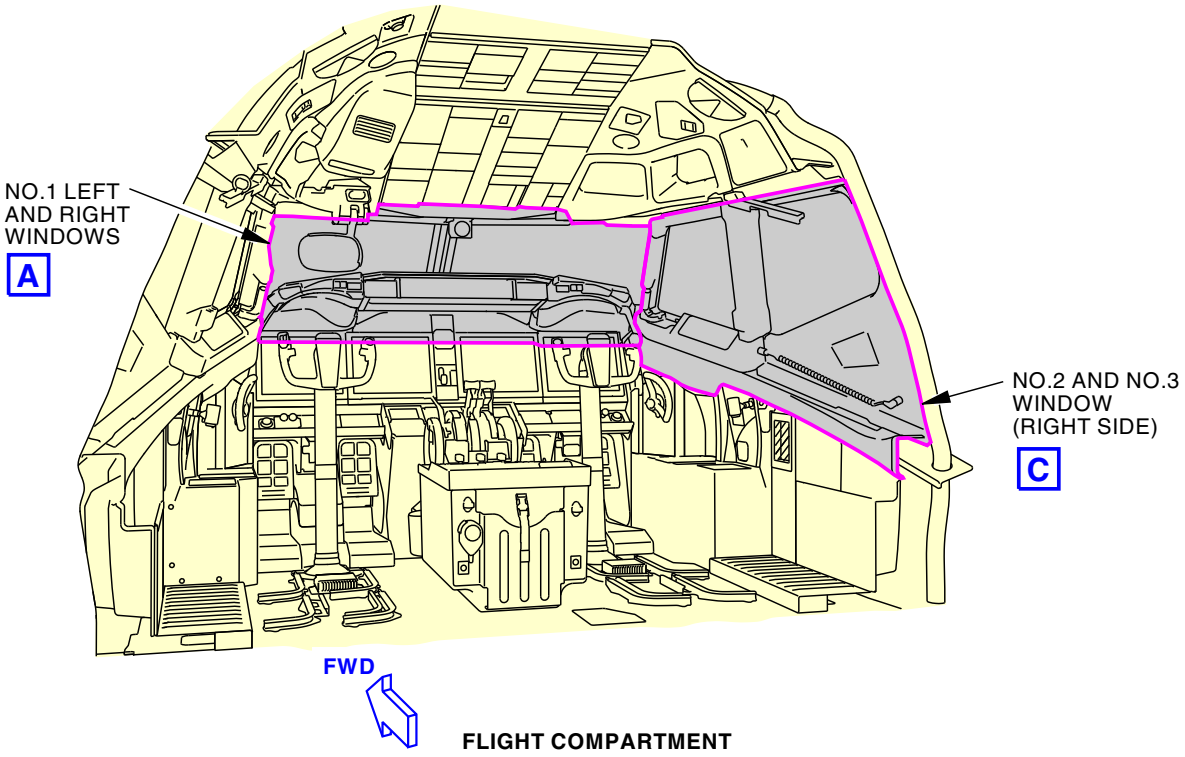

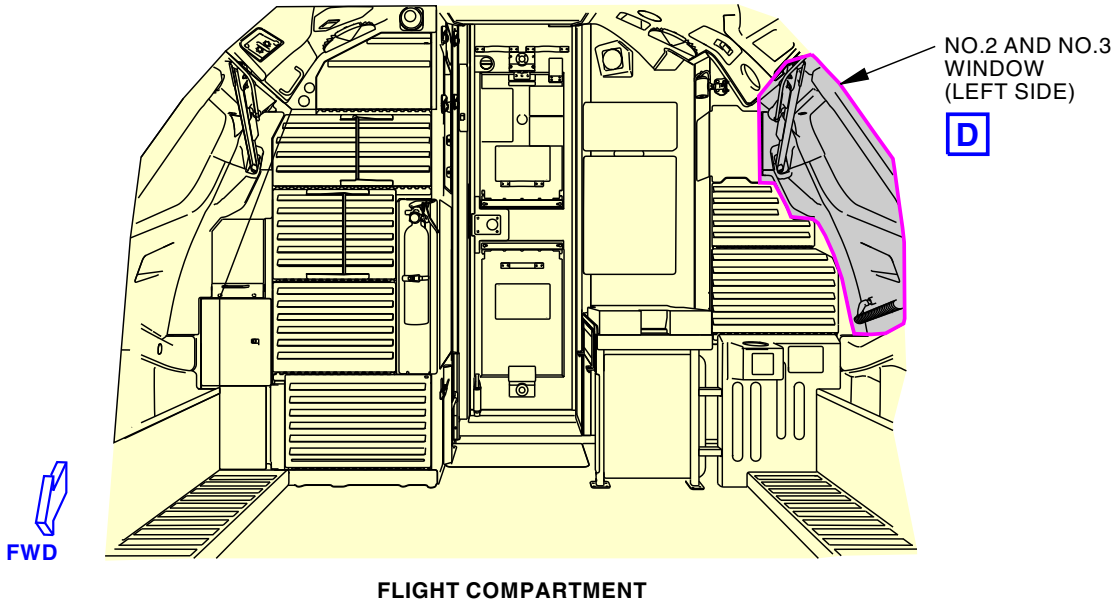

3045436 S0000812237_V1

Window Heat Insulation Resistance Check
Figure 507/30-41-21-990-807 (Sheet 1 of 7)

ECCN 9E991 BOEING PROPRIETARY - See title page for details

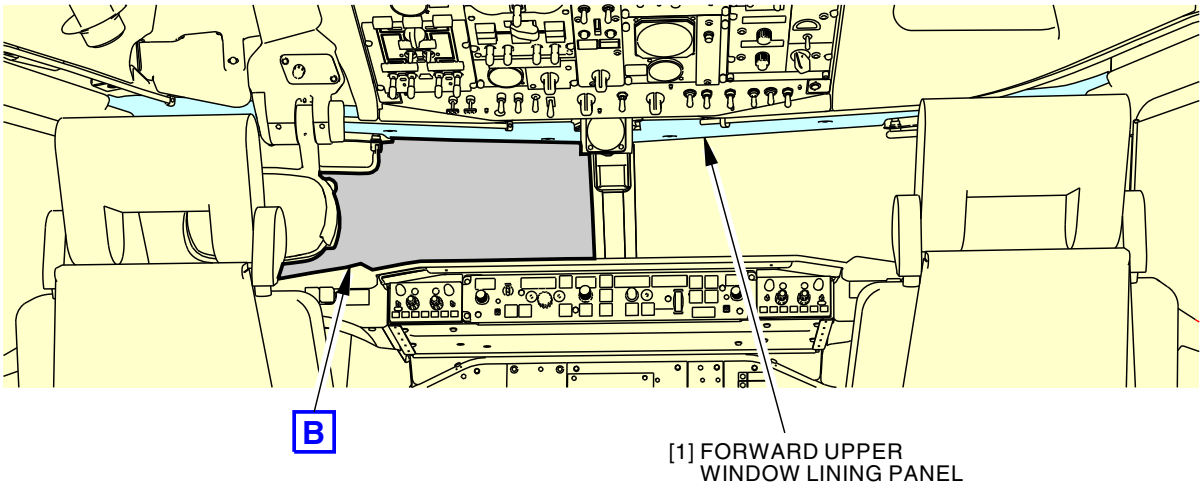

NO.1 LEFT AND RIGHT WINDOWS

A

3045437 S0000812238_V1

Window Heat Insulation Resistance Check
Figure 507/30-41-21-990-807 (Sheet 2 of 7)

ECCN 9E991 BOEING PROPRIETARY - See title page for details

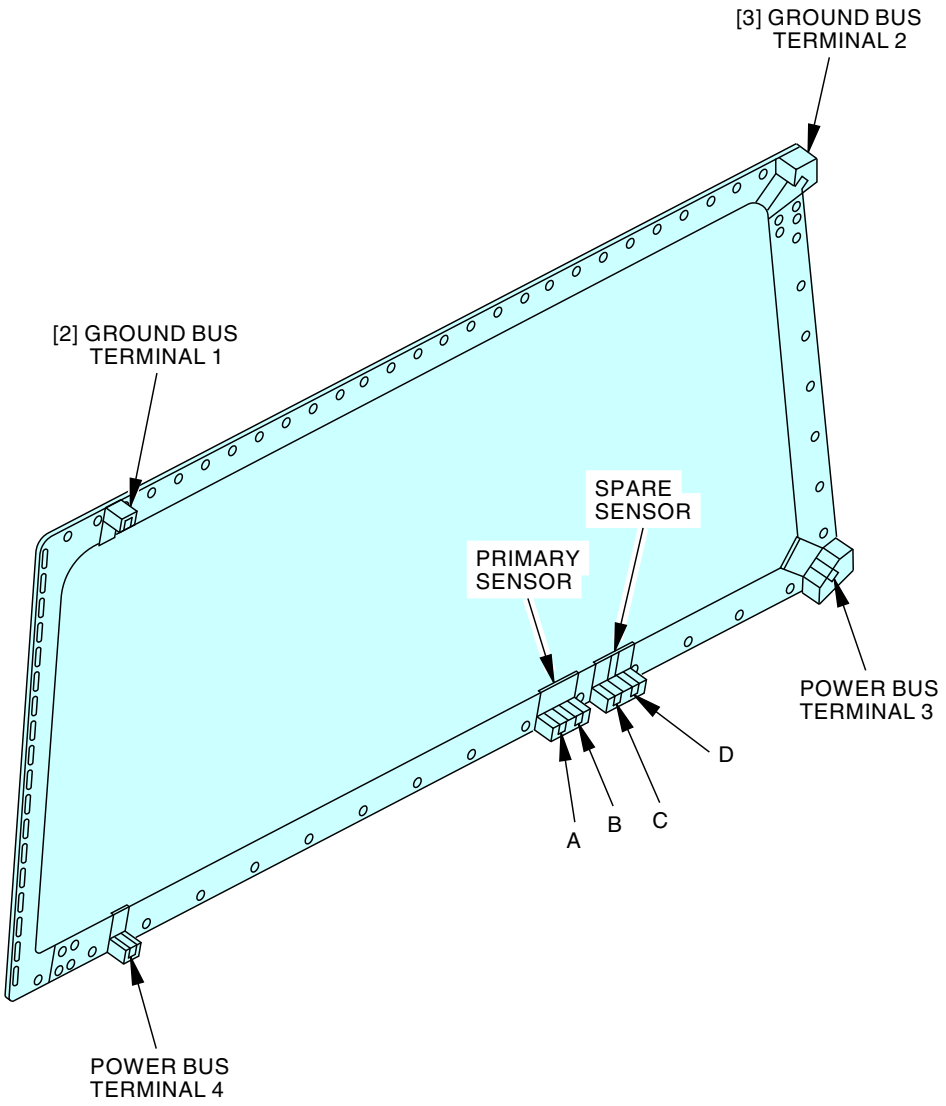

**(NO. 1 PILOT'S WINDSHIELD SHOWN,
NO. 1 CO-PILOT'S WINDSHIELD OPPOSITE)**

B

3045438 S0000812239_V1

**Window Heat Insulation Resistance Check
Figure 507/30-41-21-990-807 (Sheet 3 of 7)**

ECCN 9E991 BOEING PROPRIETARY - See title page for details

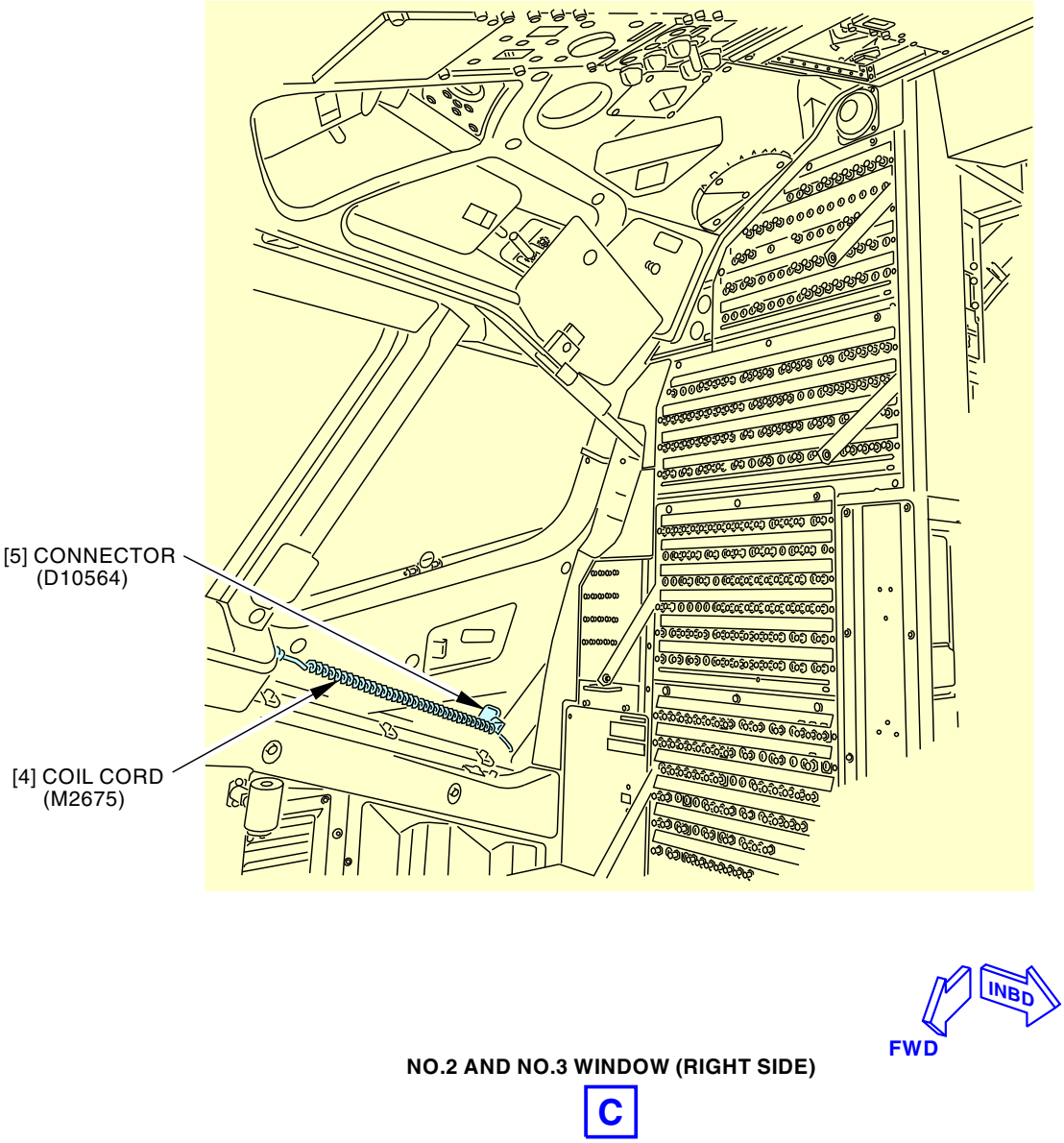

3045439 S0000812240_V1

Window Heat Insulation Resistance Check
Figure 507/30-41-21-990-807 (Sheet 4 of 7)

ECCN 9E991 BOEING PROPRIETARY - See title page for details

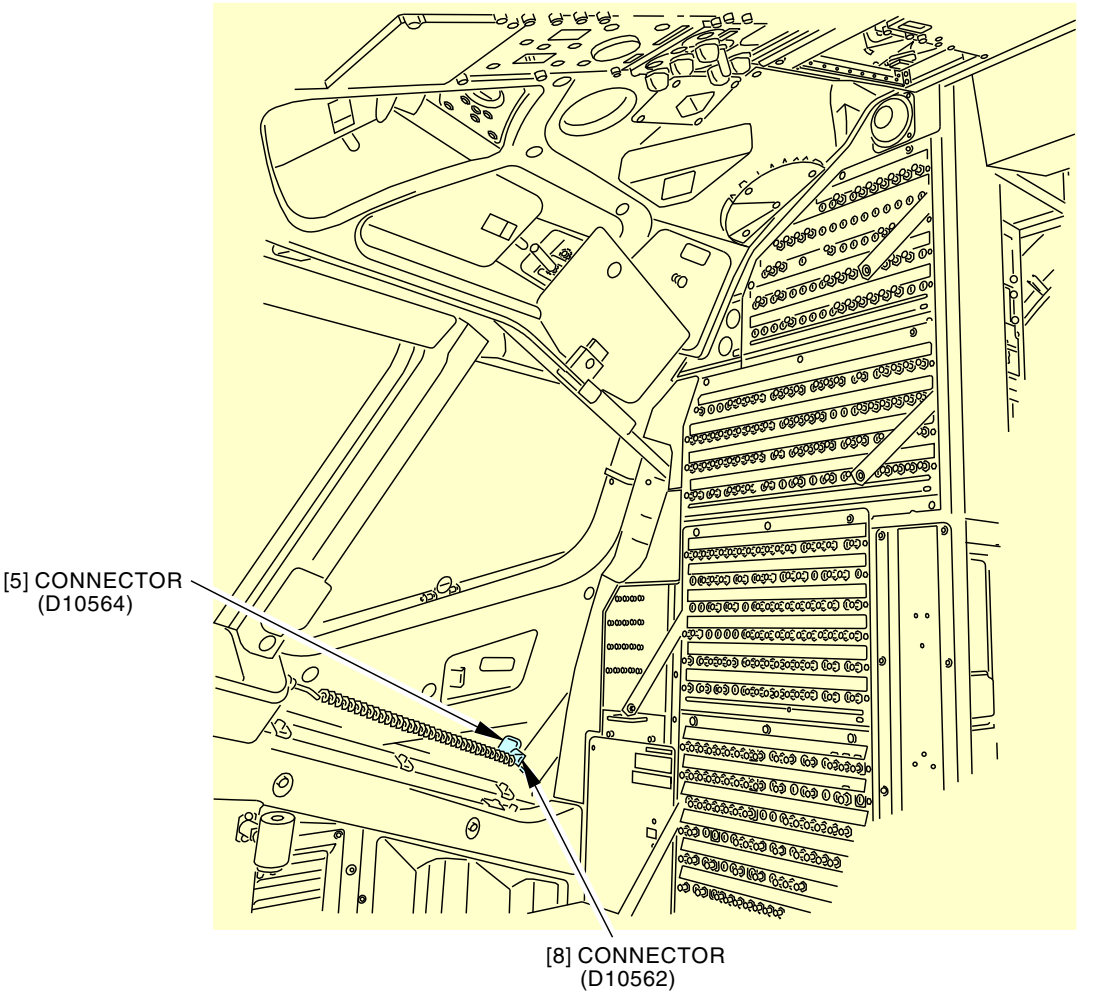

3045440 S0000812241_V1

Window Heat Insulation Resistance Check
Figure 507/30-41-21-990-807 (Sheet 5 of 7)

ECCN 9E991 BOEING PROPRIETARY - See title page for details

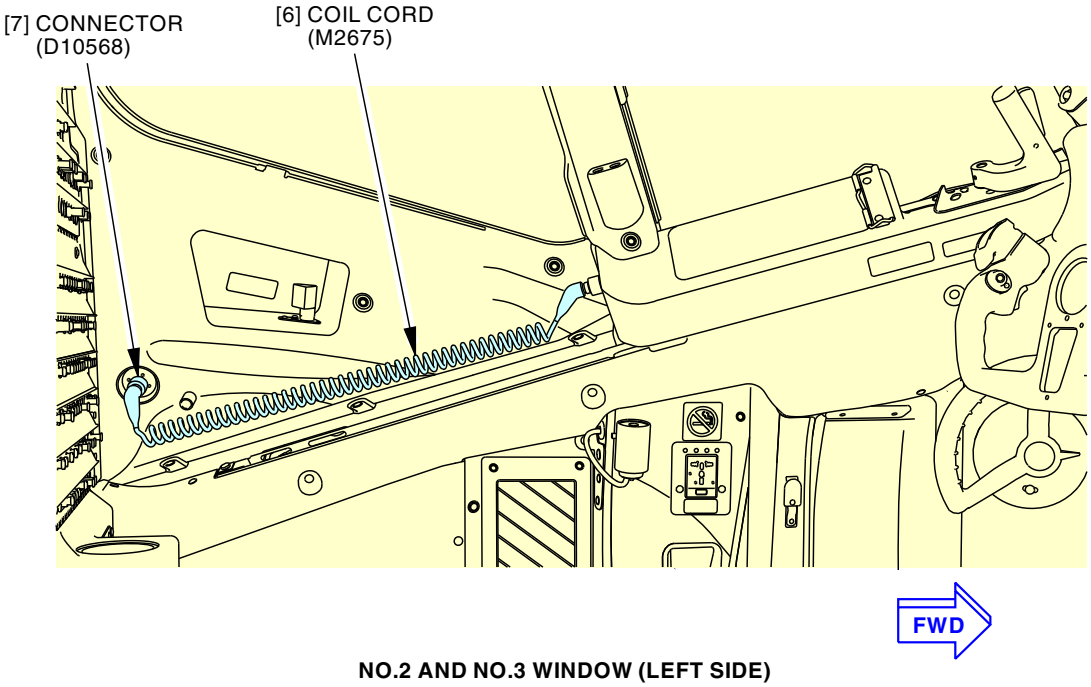

NO.2 AND NO.3 WINDOW (LEFT SIDE)

D

3045441 S0000812242_V1

Window Heat Insulation Resistance Check
Figure 507/30-41-21-990-807 (Sheet 6 of 7)

ECCN 9E991 BOEING PROPRIETARY - See title page for details

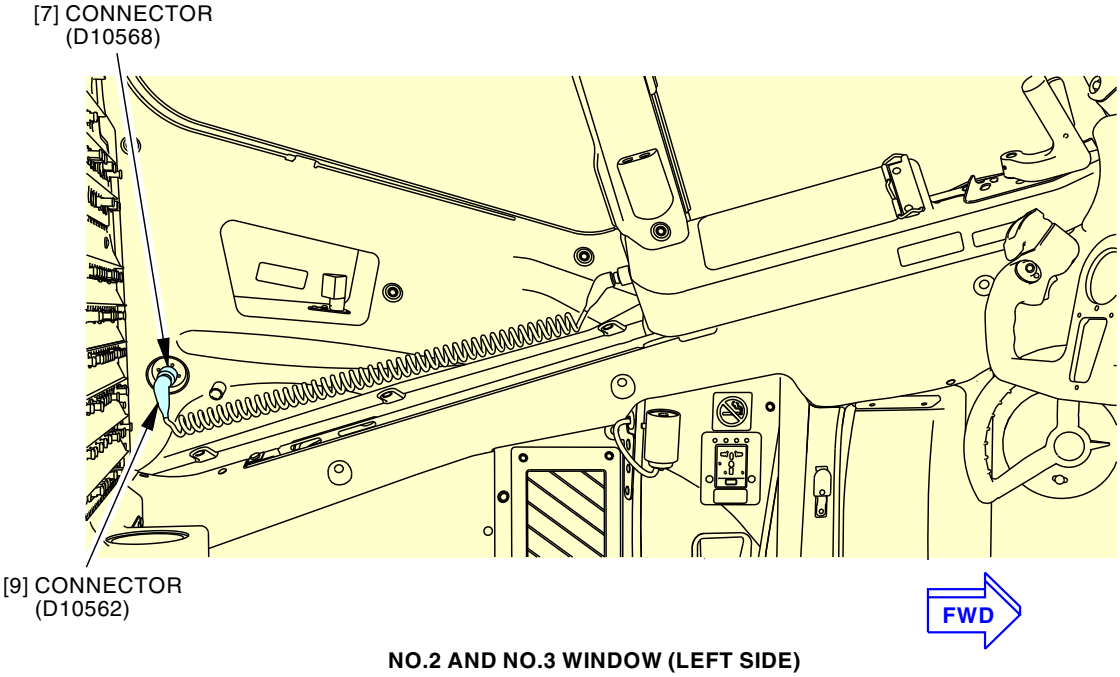

NO.2 AND NO.3 WINDOW (LEFT SIDE)

D

3045442 S0000812243_V1

Window Heat Insulation Resistance Check
Figure 507/30-41-21-990-807 (Sheet 7 of 7)

ECCN 9E991 BOEING PROPRIETARY - See title page for details

WINDOW THERMAL SWITCH - REMOVAL/INSTALLATION

1. General

A. This procedure has these tasks:

(1) Removal of the thermal switch.

(2) Installation of the thermal switch.

TASK 30-41-31-000-801

2. Thermal Switch Removal

(Figure 401)

A. General

(1) This task gives instructions to remove the Thermal Switch.

LOM 402 PRE SB 737-56-1017

(2) The window number 5 thermal switches are installed near the top of the window.

LOM 411, 412, 415, 423, 424, 427, 428, 439, 441, 464

(3) The window number 3 thermal switches are installed near the bottom of the window.

LOM 411, 412, 415, 423, 424, 427, 428, 439, 441, 464; LOM 402 PRE SB 737-56-1017

(4) The windows have markings to indicate where to install the switch. A spring holds the thermal switch against the window.

B. Location Zones

Zone	Area
212	Flight Compartment - Right

C. Prepare for the Removal

SUBTASK 30-41-31-860-001

(1) Open these circuit breakers and install safety tags:

CAPT Electrical System Panel, P18-3

Row	Col	Number	Name
D	1	C00226	WINDOW HEAT CONTROL RIGHT FRONT AC
D	2	C00225	WINDOW HEAT CONTROL LEFT SIDE AC
E	1	C00224	WINDOW HEAT CONTROL LEFT FRONT AC
E	2	C00227	WINDOW HEAT CONTROL RIGHT SIDE AC
LOM 427, 428			
F	1	C00222	WINDOW HEAT CONT RIGHT FRONT DC
F	4	C00223	WINDOW HEAT CONT RIGHT SIDE DC
F	5	C00220	WINDOW HEAT CONT LEFT FRONT DC

F/O Electrical System Panel, P6-11

Row	Col	Number	Name
LOM 411, 412, 415, 423, 424, 427, 428, 439, 441, 464			
B	7	C01650	WINDOW HEAT POWER L3
LOM 402 PRE SB 737-56-1017			
B	7	C00229	WINDOW HEAT POWER L3, L4 & L5

ECCN 9E991 BOEING PROPRIETARY - See title page for details

LOM 402 PRE SB 737-56-1017 (Continued)

(Continued)

F/O Electrical System Panel, P6-11

Row	Col	Number	Name
LOM 411, 412, 415, 423, 424, 427, 428, 439, 441, 464; LOM 402 PRE SB 737-56-1017			
B	8	C00393	WINDOW HEAT POWER RIGHT SIDE
B	9	C00228	WINDOW HEAT POWER LEFT FRONT

F/O Electrical System Panel, P6-12

Row	Col	Number	Name
LOM 411, 412, 415, 423, 424, 427, 428, 439, 441, 464			
B	7	C01649	WINDOW HEAT POWER R3
LOM 402 PRE SB 737-56-1017			
B	7	C00395	WINDOW HEAT POWER R3, R4 & R5
LOM 411, 412, 415, 423, 424, 427, 428, 439, 441, 464; LOM 402 PRE SB 737-56-1017			
B	8	C00394	WINDOW HEAT POWER RIGHT FRONT
B	9	C00392	WINDOW HEAT POWER LEFT SIDE

SUBTASK 30-41-31-010-001

(2) Remove the trim from around the number 5 window.

D. Thermal Switch Removal

SUBTASK 30-41-31-020-001

(1) Remove the thermal switch [2].

(a) Disconnect the electrical leads [1] from the thermal switch [2].

(b) Pull the spring from the thermal switch [2].

(c) Remove the thermal switch [2] from the window.

NOTE: Be careful not to damage the fairing compound. If the switch does not come off by hand, you may tap the switch side with a no bounce hammer. If you use a hammer to remove the switch, you will have to discard the switch.

——— END OF TASK ———

ECCN 9E991 BOEING PROPRIETARY - See title page for details

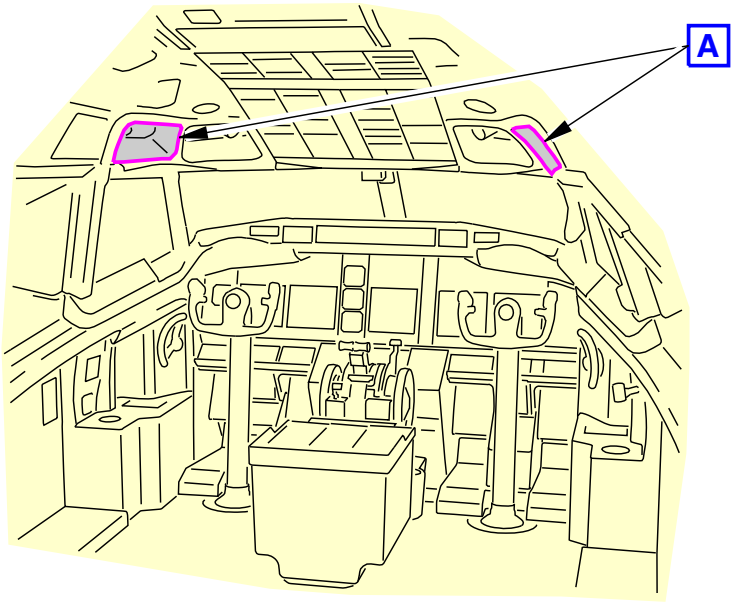

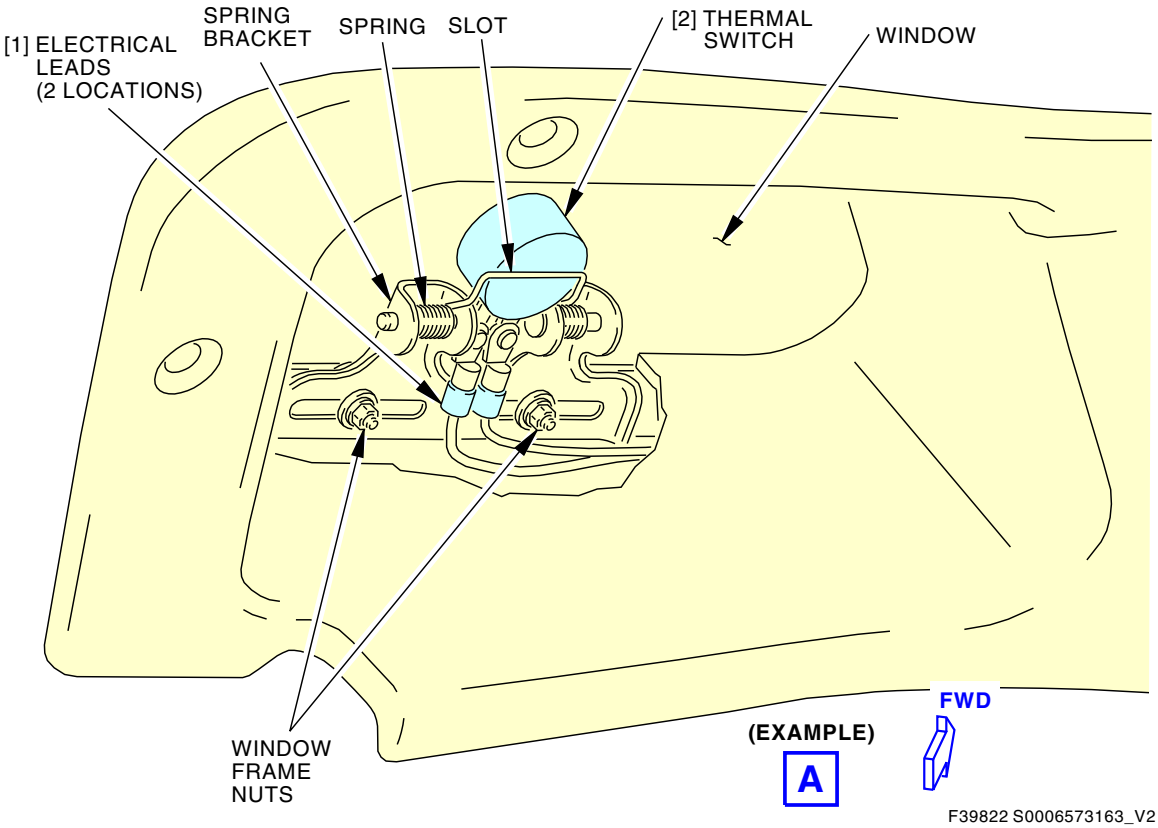

Window Heat Thermal Switch Installation
Figure 401/30-41-31-990-801 (Sheet 1 of 2)

ECCN 9E991 BOEING PROPRIETARY - See title page for details

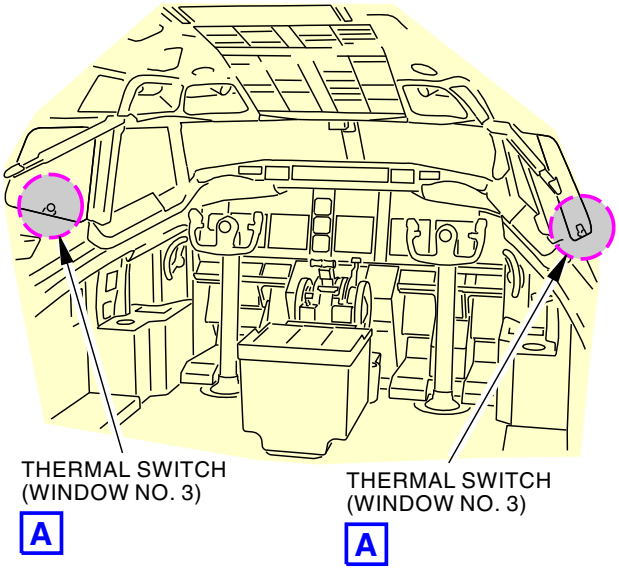

FLIGHT COMPARTMENT

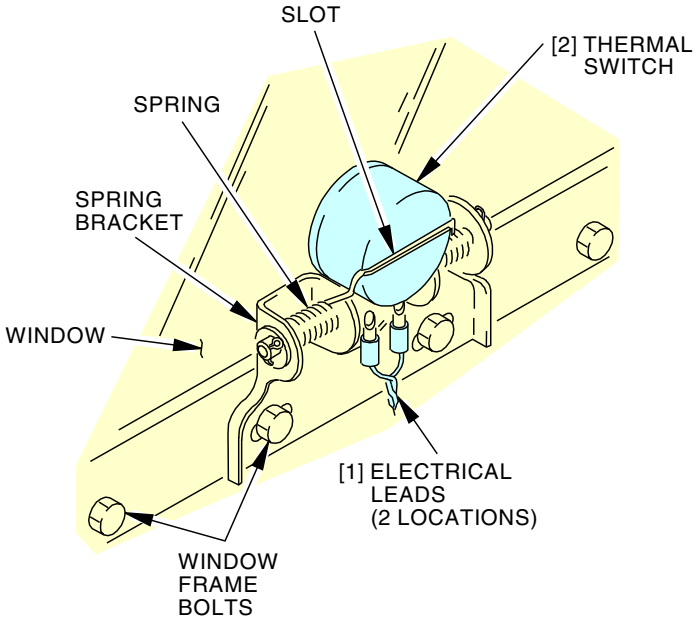

THERMAL SWITCH (WINDOW NO. 3)
(EXAMPLE)

A

J73811 S0000177463_V2

Window Heat Thermal Switch Installation
Figure 401/30-41-31-990-801 (Sheet 2 of 2)

ECCN 9E991 BOEING PROPRIETARY - See title page for details

TASK 30-41-31-400-801

3. Thermal Switch Installation

(Figure 401)

A. Tools/Equipment

NOTE: When more than one tool part number is listed under the same "Reference" number, the tools shown are alternates to each other within the same airplane series. Tool part numbers that are replaced or non-procurable are preceded by "Opt:", which stands for Optional.

Reference	Description
COM-1572	Thermometer - Infrared, Intrinsically Safe Part #: 568 EX Supplier: 89536 Part #: 568 EX/BR Supplier: 89536 Part #: 568 EX/CN Supplier: 89536 Part #: 568 EX/ETL Supplier: 89536 Opt Part #: DHS24XC-FM Supplier: 08086 Opt Part #: DHS24XF-FM Supplier: 08086 Opt Part #: EX-MP4 A Supplier: 3GT36 Opt Part #: IR-16L3 IS Supplier: 75037
STD-1179	Tester - Pyrometer

B. Consumable Materials

Reference	Description	Specification
A00214	Compound - Honeycomb Edge Filling & Potting, Epoxy Based, 2 Part RT Cure (20 Min Gel)	BMS5-28 Type 3
A50061	Adhesive - Epoxy	BAC5010 Type 54
B00083	Solvent - VM&P Naphthas	TT-N-95 Type II, ASTM D-3735 Type III
D00095	Lubricant - Dry Film - MS122	
G50427	Compound - Thermal Heat Sink	MIL-DTL-47113

C. Location Zones

Zone	Area
212	Flight Compartment - Right

D. Prepare to Install the Thermal Switch

SUBTASK 30-41-31-420-008

(1) Remove the old fairing compound from the window.

SUBTASK 30-41-31-420-009

(2) Clean the face of the thermal switch [2] with solvent, B00083.

SUBTASK 30-41-31-420-010

(3) Clean the surface of the window where it will touch the thermal switch [2] with solvent, B00083.

SUBTASK 30-41-31-420-011

(4) Prepare the fairing compound, A00214, or thermal heat sink compound, G50427, that bonds the thermal switch [2] to the window.

NOTE: Optional fairing compounds include: Granger 610-1016 DC340 or adhesive, A50061.

SUBTASK 30-41-31-420-012

(5) Find the correct location to install the thermal switch [2].

NOTE: It could be necessary to change the position of the bracket.

ECCN 9E991 BOEING PROPRIETARY - See title page for details

(a) Look for the arrow or vertical line that is machined onto the metal insert, visible from the inboard surface of the window.

1) If the window does not have the arrow or vertical line, locate the label that reads "LOCATE SWITCH".

(b) Put the vertical center-line of the thermal switch [2] as near as possible to the location indicated by the positioning arrow or vertical line.

1) If there is no arrow or vertical line, place center-line of thermal switch within 1 in. (25.4 mm) of label.

SUBTASK 30-41-31-420-013

NOTE: Omit this step when using thermal heat sink compound, G50427.

(6) Put MS122 lubricant, D00095, on the surface of the thermal switch [2] that touches the window.

SUBTASK 30-41-31-420-014

(7) Put the excessive thermal heat sink compound, G50427, or compound, A00214, on the face of the thermal switch [2] that touches the window.

NOTE: Optional fairing compounds include GRANGER 610-1016 DC340 and adhesive, A50061.

CAUTION

DO NOT APPLY TOO MUCH COMPOUND ON THE SWITCH. TOO MUCH COMPOUND CAN CAUSE DAMAGE TO THE WINDOW.

(a) Use only a very thin layer of thermal heat sink compound, G50427, or compound, A00214, just enough to cover the surface of the switch when it is against the window with the retaining spring engaged.

E. Thermal Switch Installation

SUBTASK 30-41-31-420-003

(1) Put the thermal switch [2] in the spring bracket.

(a) Pull the spring back.

(b) Make sure the terminals on the thermal switch [2] are at the hinge of the spring.

(c) Engage the spring with the slot on the rear of the thermal switch [2].

(d) Let the spring push the thermal switch [2] against the window.

(e) Release the spring.

(f) Remove all thermal heat sink compound, G50427, or compound, A00214, that comes out against the window.

SUBTASK 30-41-31-420-015

NOTE: Omit this step and its substeps when using thermal heat sink compound, G50427.

(2) Make sure the bond is satisfactory.

NOTE: Permit one hour for the sealant to become hard. When the temperature is less than 50°F (10°C), more time is necessary.

(a) Look through the window at the bond.

(b) Make a new bond if you see the following:

1) Bubbles with a diameter of more than 3/32 in. (2.4 mm).

2) Bubbles that add to more than 10 percent of the bond.

ECCN 9E991 BOEING PROPRIETARY - See title page for details

SUBTASK 30-41-31-420-016

(3) Clean excess thermal heat sink compound, G50427, or compound, A00214, from the area of the bond and the thermal switch [2] with solvent, B00083.

SUBTASK 30-41-31-420-017

(4) Re-install the trim around the window.

SUBTASK 30-41-31-420-018

(5) If it is necessary, trim the liner and re-install the trim around the window.

NOTE: It is acceptable to leave the notch from the previous switch as is.

SUBTASK 30-41-31-420-004

(6) Connect the electrical leads [1] to the thermal switch [2].

F. Thermal Switch Installation Test

SUBTASK 30-41-31-710-001

(1) Do a test of the thermal switch [2].

(a) Remove the safety tags and close these circuit breakers:

CAPT Electrical System Panel, P18-3

Row	Col	Number	Name
D	1	C00226	WINDOW HEAT CONTROL RIGHT FRONT AC
D	2	C00225	WINDOW HEAT CONTROL LEFT SIDE AC
E	1	C00224	WINDOW HEAT CONTROL LEFT FRONT AC
E	2	C00227	WINDOW HEAT CONTROL RIGHT SIDE AC
LOM 427, 428			
F	1	C00222	WINDOW HEAT CONT RIGHT FRONT DC
F	4	C00223	WINDOW HEAT CONT RIGHT SIDE DC
F	5	C00220	WINDOW HEAT CONT LEFT FRONT DC

F/O Electrical System Panel, P6-11

Row	Col	Number	Name
LOM 411, 412, 415, 423, 424, 427, 428, 439, 441, 464			
B	7	C01650	WINDOW HEAT POWER L3
LOM 402 PRE SB 737-56-1017			
B	7	C00229	WINDOW HEAT POWER L3, L4 & L5
LOM 411, 412, 415, 423, 424, 427, 428, 439, 441, 464; LOM 402 PRE SB 737-56-1017			
B	8	C00393	WINDOW HEAT POWER RIGHT SIDE
B	9	C00228	WINDOW HEAT POWER LEFT FRONT

F/O Electrical System Panel, P6-12

Row	Col	Number	Name
LOM 411, 412, 415, 423, 424, 427, 428, 439, 441, 464			
B	7	C01649	WINDOW HEAT POWER R3
LOM 402 PRE SB 737-56-1017			
B	7	C00395	WINDOW HEAT POWER R3, R4 & R5
LOM 411, 412, 415, 423, 424, 427, 428, 439, 441, 464; LOM 402 PRE SB 737-56-1017			
B	8	C00394	WINDOW HEAT POWER RIGHT FRONT
B	9	C00392	WINDOW HEAT POWER LEFT SIDE

(b) Push the applicable window heat switch to the ON position.

ECCN 9E991 BOEING PROPRIETARY - See title page for details

(c) Monitor the inner temperature of the window adjacent to the thermal switch [2] with pyrometer, STD-1179, or Infrared Thermometer, COM-1572.

(d) If the temperature stays between 65°F (18.3°C) and 105°F (40.6°C) for window No. 3 and 80°F (27°C) and 125°F (52°C) for window No. 5, then you have corrected the fault.

NOTE: It may take more than 15 minutes for the window to heat.

SUBTASK 30-41-31-860-002

(2) Put the window heat switch in the OFF position.

END OF TASK

ECCN 9E991 BOEING PROPRIETARY - See title page for details

WINDOW/PITOT HEAT MODULE (P5-9) - REMOVAL/INSTALLATION

1. **General**
   A. The window/pitot heat module is on the flight crew's overhead panel. The module contains lights and switches used for the Window anti-icing and air data sensor anti-icing system.
   B. This procedure has these tasks:
      (1) Removal of the window/pitot heat module (P5-9).
      (2) Installation of the window/pitot heat module (P5-9).

TASK 30-41-41-000-801

2. **Window/Pitot Heat Module (P5-9) Removal**
(Figure 401)

A. General
(1) This task gives instructions to remove the Window/Pitot Heat Module (P5-9).
(2) The window/pitot heat module is on the flight crew's overhead panel. The module contains lights and switches used for the window anti-icing and air data sensor anti-icing system.

B. Location Zones

Zone	Area
212	Flight Compartment - Right

C. Prepare for the Removal

SUBTASK 30-41-41-860-001

(1) Open these circuit breakers and install safety tags:

CAPT Electrical System Panel, P18-3

Row	Col	Number	Name
C	1	C00523	HEATERS CAPT PITOT
C	2	C00238	HEATERS TEMP PROBE
C	3	C01072	HEATERS ALPHA VANE LEFT
C	4	C00236	HEATERS ELEV PITOT LEFT
LOM 402, 404, 406, 407, 411, 412, 415, 416, 420, 422-434, 437-447, 450-464			
D	1	C00226	WINDOW HEAT CONTROL RIGHT FRONT AC
D	2	C00225	WINDOW HEAT CONTROL LEFT SIDE AC
LOM ALL			
D	3	C01071	HEATERS ALPHA VANE RIGHT
D	4	C00237	HEATERS ELEV PITOT RIGHT
D	5	C00525	HEATERS F/O PITOT
D	6	C00524	HEATERS AUX PITOT
LOM 402, 404, 406, 407, 411, 412, 415, 416, 420, 422-434, 437-447, 450-464			
E	1	C00224	WINDOW HEAT CONTROL LEFT FRONT AC
E	2	C00227	WINDOW HEAT CONTROL RIGHT SIDE AC

F/O Electrical System Panel, P6-3

Row	Col	Number	Name
LOM ALL			
F	16	C00570	PROBE INDICATION F/O
F	18	C00569	PROBE INDICATION CAPT

ECCN 9E991 BOEING PROPRIETARY - See title page for details

F/O Electrical System Panel, P6-11

Row	Col	Number	Name
LOM 404, 411, 412, 415, 423, 424, 427, 428, 439, 441, 464			
B	7	C01650	WINDOW HEAT POWER L3
LOM 402			
B	7	C00229	WINDOW HEAT POWER L3, L4 & L5

F/O Electrical System Panel, P6-12

Row	Col	Number	Name
LOM 404, 411, 412, 415, 423, 424, 427, 428, 439, 441, 464			
B	7	C01649	WINDOW HEAT POWER R3
LOM 402			
B	7	C00395	WINDOW HEAT POWER R3, R4 & R5

LOM ALL

These circuit breakers are inoperative and should remain open:

F/O Electrical System Panel, P6-11

Row	Col	Number	Name
LOM 402 POST SB 737-56-1017			
B	7	C00229	WINDOW HEAT POWER L4 & L5 (INOP)

F/O Electrical System Panel, P6-12

Row	Col	Number	Name
B	7	C00395	WINDOW HEAT POWER R4 & R5 (INOP)

LOM ALL

SUBTASK 30-41-41-010-001

(2) Open the P5 overhead panel assembly.

(a) Loosen the quarter turn fasteners on the bottom corners of the P5 panel.

> **CAUTION**
> THE P5 PANEL IS VERY HEAVY AND WILL SWING FREELY WHEN THE LATCHES ARE RELEASED. SUPPORT THE P5 PANEL BEFORE YOU RELEASE THE SAFETY LATCHES.

(b) Release the panel safety latches.

D. Window/Pitot Heat Module (P5-9) Removal

SUBTASK 30-41-41-020-001

> **WARNING**
> THERE ARE HIGH VOLTAGES IN THE P5 OVERHEAD PANEL. MAKE SURE THAT YOU DO NOT TOUCH OR SHORT EXPOSED TERMINALS. INJURY TO PERSONNEL OR DAMAGE TO EQUIPMENT CAN OCCUR.

(1) Remove the connectors from the window/pitot heat module [1].

SUBTASK 30-41-41-020-002

(2) Loosen the quarter turn fasteners which hold the window/pitot heat module [1] in place.

ECCN 9E991 BOEING PROPRIETARY - See title page for details

SUBTASK 30-41-41-020-003

(3) Remove the window/pitot heat module [1] from the P5 overhead panel.

END OF TASK

ECCN 9E991 BOEING PROPRIETARY - See title page for details

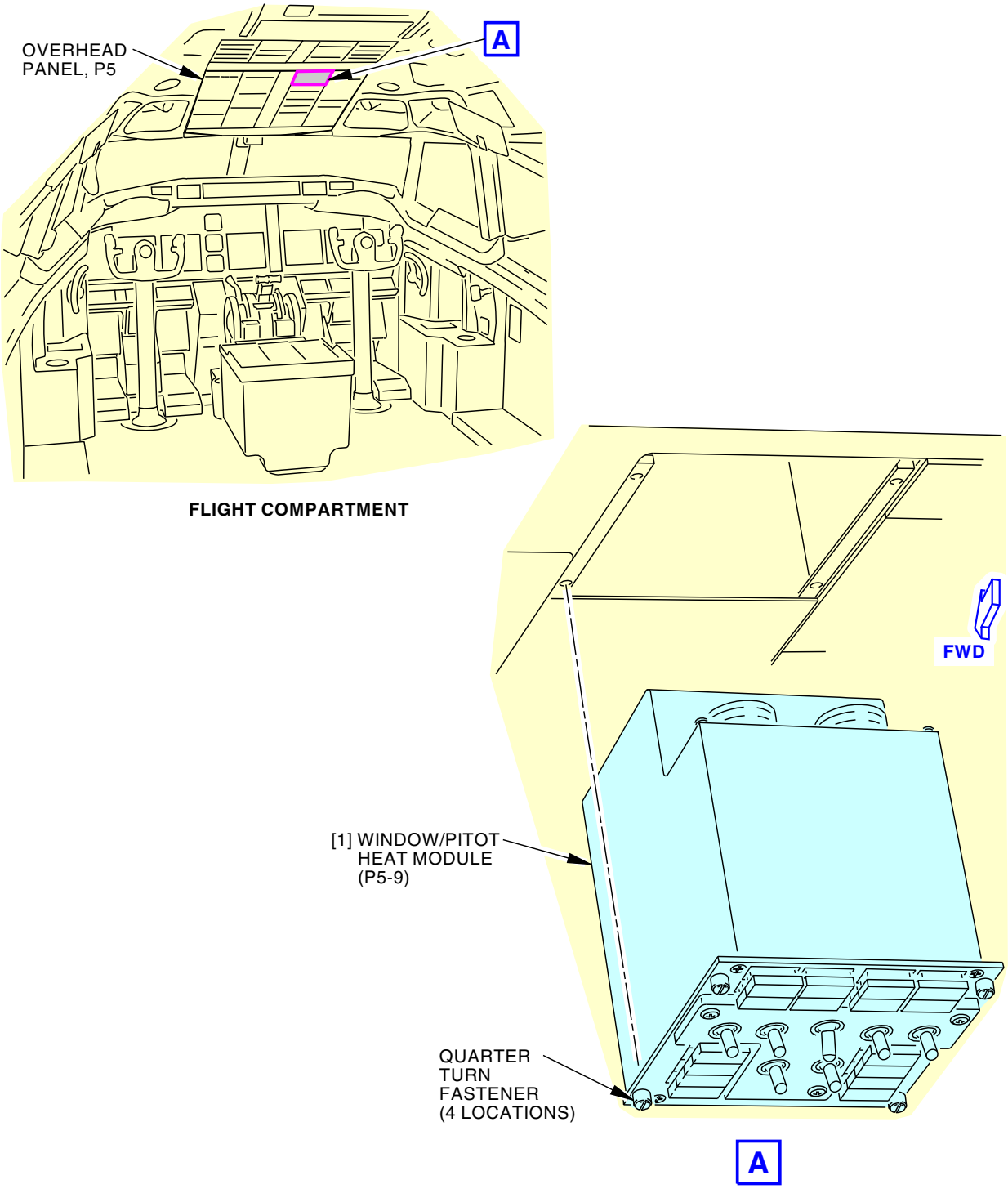

Window/Pitot Heat Module Installation
Figure 401/30-41-41-990-801

ECCN 9E991 BOEING PROPRIETARY - See title page for details

TASK 30-41-41-400-801

3. Window/Pitot Heat Module (P5-9) Installation

A. General

(1) This task gives instructions to install the Window/Pitot Heat Module (P5-9).

B. References

Reference	Title
30-31-00-730-801	Pitot Probe, AOA Sensor, and TAT Probe Heater - System Test (P/B 501)

C. Location Zones

Zone	Area
212	Flight Compartment - Right

D. Window/Pitot Heat Module (P5-9) Installation

SUBTASK 30-41-41-420-001

(1) Install the window/pitot heat module [1] in the overhead panel (P5).

SUBTASK 30-41-41-420-002

(2) Tighten the quarter turn fasteners.

SUBTASK 30-41-41-420-003

WARNING THERE ARE HIGH VOLTAGES IN THE P5 OVERHEAD PANEL. MAKE SURE YOU DO NOT TOUCH OR SHORT EXPOSED TERMINALS. INJURY TO PERSONNEL OR DAMAGE TO EQUIPMENT CAN OCCUR.

(3) Attach the connectors to the window/pitot heat module [1].

SUBTASK 30-41-41-410-001

CAUTION TO PREVENT CHAFING OR DAMAGE TO WIRE HARNESSES, MAKE CERTAIN THAT WIRING IS ROUTED PROPERLY DURING INSTALLATION OF GLARESHIELD.

(4) Do these steps to close the P5 overhead panel assembly:

(a) Make sure the safety latches are in the proper position to enable the P5 panel to be closed.

(b) Raise the P5 overhead panel assembly.

(c) Tighten the quarter turn fasteners on the bottom corners of the P5 panel.

E. Window/Pitot Heat Module (P5-9) Installation Test.

SUBTASK 30-41-41-860-002

(1) Remove the safety tags and close these circuit breakers:

CAPT Electrical System Panel, P18-3

Row	Col	Number	Name
C	1	C00523	HEATERS CAPT PITOT
C	2	C00238	HEATERS TEMP PROBE
C	3	C01072	HEATERS ALPHA VANE LEFT
C	4	C00236	HEATERS ELEV PITOT LEFT

ECCN 9E991 BOEING PROPRIETARY - See title page for details

(Continued)

CAPT Electrical System Panel, P18-3

Row	Col	Number	Name
LOM 402, 404, 406, 407, 411, 412, 415, 416, 420, 422-434, 437-447, 450-464			
D	1	C00226	WINDOW HEAT CONTROL RIGHT FRONT AC
D	2	C00225	WINDOW HEAT CONTROL LEFT SIDE AC
LOM ALL			
D	3	C01071	HEATERS ALPHA VANE RIGHT
D	4	C00237	HEATERS ELEV PITOT RIGHT
D	5	C00525	HEATERS F/O PITOT
D	6	C00524	HEATERS AUX PITOT
LOM 402, 404, 406, 407, 411, 412, 415, 416, 420, 422-434, 437-447, 450-464			
E	1	C00224	WINDOW HEAT CONTROL LEFT FRONT AC
E	2	C00227	WINDOW HEAT CONTROL RIGHT SIDE AC

F/O Electrical System Panel, P6-3

Row	Col	Number	Name
LOM ALL			
F	16	C00570	PROBE INDICATION F/O
F	18	C00569	PROBE INDICATION CAPT

F/O Electrical System Panel, P6-11

Row	Col	Number	Name
LOM 404, 411, 412, 415, 423, 424, 427, 428, 439, 441, 464			
B	7	C01650	WINDOW HEAT POWER L3
LOM 402			
B	7	C00229	WINDOW HEAT POWER L3, L4 & L5

F/O Electrical System Panel, P6-12

Row	Col	Number	Name
LOM 404, 411, 412, 415, 423, 424, 427, 428, 439, 441, 464			
B	7	C01649	WINDOW HEAT POWER R3
LOM 402			
B	7	C00395	WINDOW HEAT POWER R3, R4 & R5

LOM ALL

These circuit breakers are inoperative and should remain open:

F/O Electrical System Panel, P6-11

Row	Col	Number	Name
LOM 402 POST SB 737-56-1017			
B	7	C00229	WINDOW HEAT POWER L4 & L5 (INOP)

F/O Electrical System Panel, P6-12

Row	Col	Number	Name
B	7	C00395	WINDOW HEAT POWER R4 & R5 (INOP)

LOM ALL

ECCN 9E991 BOEING PROPRIETARY - See title page for details

SUBTASK 30-41-41-760-001

(2) On the captain's main instrument panel, P1, set the switch for the master dim and test lights to TEST.

(a) Make sure all the lights on the window/pitot heat module [1] come on.

SUBTASK 30-41-41-860-009

(3) On the captain's main instrument panel, P1, set the switch for the master dim and test lights to BRT.

SUBTASK 30-41-41-710-001

(4) Put the PITOT & PROBE HEAT switches to the ON position.

(a) Make sure the pitot heat indications on the module go off.

WARNING DO NOT TOUCH THE PROBES WHEN YOU CHECK FOR HEAT. THE PROBE TEMPERATURES CAN REACH 800 DEGREES F (427 DEGREES C) IN STILL AIR.

(b) Make sure the pitot probes get hot.

NOTE: You can check for heat by spraying the probe with water and watching for steam.

LOM 404, 407, 420 PRE SB 737-30A1063

SUBTASK 30-41-41-860-003

(5) Put the PITOT & PROBE HEAT switches to the OFF position.

LOM 402, 406, 411, 412, 415, 416, 422-434, 437-447, 450-999; LOM 404, 407, 420 POST SB 737-30A1063

SUBTASK 30-41-41-860-006

(6) Put the PITOT & PROBE HEAT switches to the AUTO position.

LOM ALL

SUBTASK 30-41-41-860-007

(7) Make sure the pitot heat indications on the module come on.

SUBTASK 30-41-41-860-004

(8) Put the WINDOW HEAT switches to the ON position.

NOTE: Do not power test when all ON lights are illuminated

SUBTASK 30-41-41-710-002

(9) Select the OVERHEAT position on the POWER AND OVERHEAT TEST switch, S7.

LOM 402, 404, 406, 407, 411, 412, 415, 416, 420, 422-426, 429-434, 437-447, 450-999

(a) Make sure the OVERHEAT lights come on.

LOM 427, 428

(b) Make sure the window heat OFF lights go off.

LOM ALL

SUBTASK 30-41-41-860-005

(10) Set the WINDOW HEAT and POWER AND OVERHEAT TEST switches to the off position.

ECCN 9E991 BOEING PROPRIETARY - See title page for details

SUBTASK 30-41-41-710-004

(11) Do this task: Pitot Probe, AOA Sensor, and TAT Probe Heater - System Test, TASK 30-31-00-730-801.

——— END OF TASK ———

ECCN 9E991 BOEING PROPRIETARY - See title page for details

WINDSHIELD WIPER SYSTEM - MAINTENANCE PRACTICES

1. General

A. This procedure has these tasks:

(1) Windshield wiper system - deactivation.

(2) Windshield wiper system - activation.

TASK 30-42-00-040-801

2. Windshield Wiper System - Deactivation

A. General

(1) This task will deactivate the power to the windshield wiper system.

B. Location Zones

Zone	Area
211	Flight Compartment - Left
212	Flight Compartment - Right

C. Procedure

SUBTASK 30-42-00-020-001

(1) Open these circuit breakers and install safety tags:

CAPT Electrical System Panel, P18-3

Row	Col	Number	Name
B	1	C00055	ANTI-ICE & RAIN WSHLD WIPER RIGHT
B	3	C00054	ANTI-ICE & RAIN WSHLD WIPER LEFT
LOM 402, 404, 406, 407, 411, 412, 415, 416, 420, 422-434, 437-447, 450-464			
D	1	C00226	WINDOW HEAT CONTROL RIGHT FRONT AC
E	1	C00224	WINDOW HEAT CONTROL LEFT FRONT AC

F/O Electrical System Panel, P6-11

Row	Col	Number	Name
LOM ALL			
B	9	C00228	WINDOW HEAT POWER LEFT FRONT

F/O Electrical System Panel, P6-12

Row	Col	Number	Name
B	8	C00394	WINDOW HEAT POWER RIGHT FRONT

D. Windshield Wiper System - Tryout

NOTE: This tryout is to make sure that the power to the windshield wiper system is in a zero energy state.

SUBTASK 30-42-00-210-002

CAUTION

DO NOT OPERATE THE WINDSHIELD WIPERS ON DRY GLASS. ALWAYS SUPPLY WATER TO THE WINDSHIELDS BEFORE YOU OPERATE THE WIPER. THE WIPER WILL CAUSE DAMAGE TO A DRY WINDSHIELD.

(1) Supply a continuous spray of clean water to the windshield.

ECCN 9E991 BOEING PROPRIETARY - See title page for details

SUBTASK 30-42-00-210-003

(2) Set the right windshield wiper switch to the INT, LOW, or HIGH position.

(a) Make sure that the right wiper does not come on.

SUBTASK 30-42-00-020-003

(3) Set the right windshield wiper switch to the PARK position.

SUBTASK 30-42-00-210-005

(4) Set the left windshield wiper switch to the INT, LOW, or HIGH position.

(a) Make sure that the left wiper does not come on.

SUBTASK 30-42-00-020-004

(5) Set the left windshield wiper switch to the PARK position.

END OF TASK

ECCN 9E991 BOEING PROPRIETARY - See title page for details

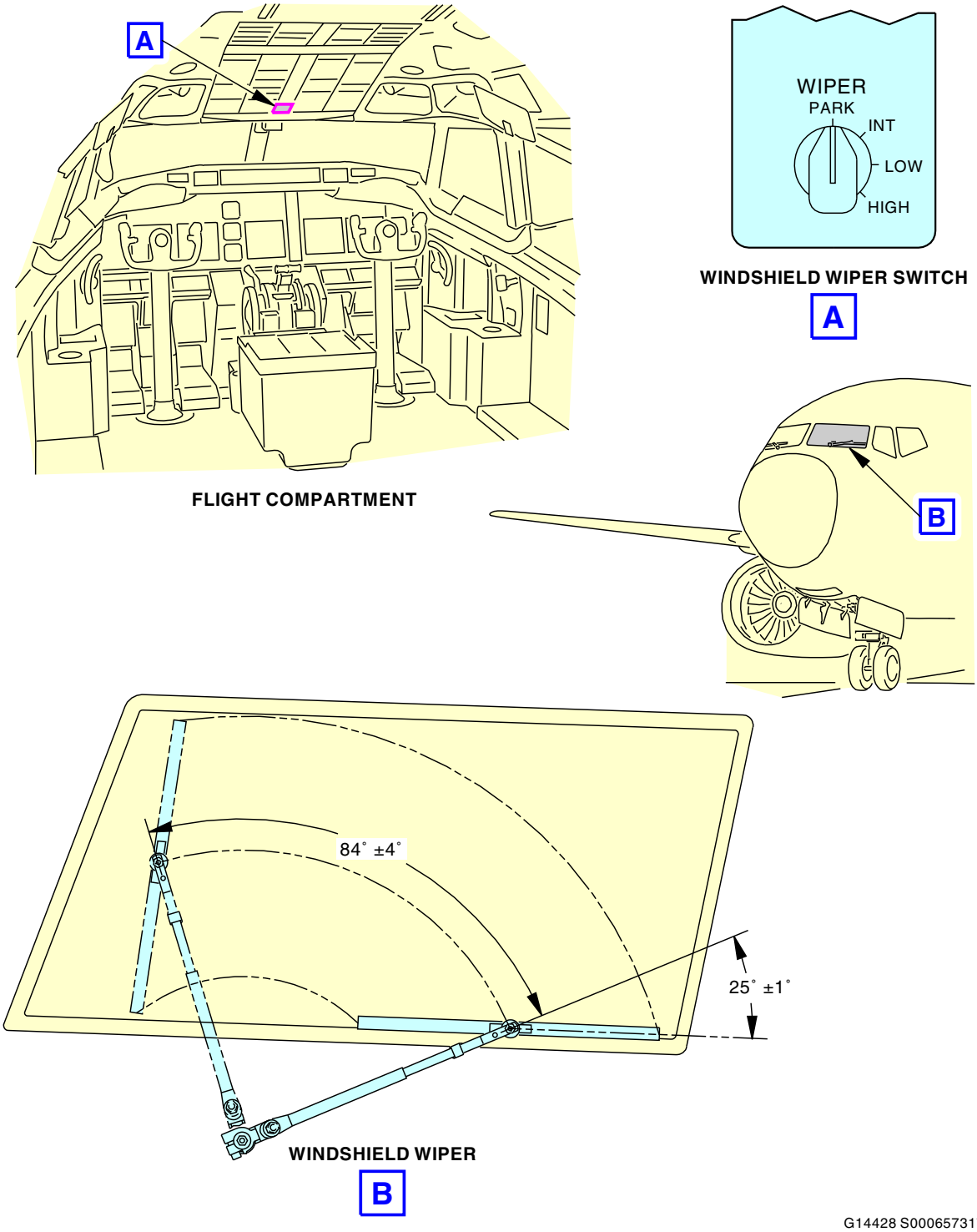

G14428 S0006573177_V2

Windshield Wiper System
Figure 201/30-42-00-990-802

ECCN 9E991 BOEING PROPRIETARY - See title page for details

TASK 30-42-00-440-801

3. **Windshield Wiper System - Activation**
(Figure 201)

A. General

(1) This task will activate the power to the windshield wiper system.

B. Location Zones

Zone	Area
211	Flight Compartment - Left
212	Flight Compartment - Right

C. Procedure

SUBTASK 30-42-00-420-001

(1) Remove the safety tags and close these circuit breakers:

CAPT Electrical System Panel, P18-3

Row	Col	Number	Name
B	1	C00055	ANTI-ICE & RAIN WSHLD WIPER RIGHT
B	3	C00054	ANTI-ICE & RAIN WSHLD WIPER LEFT
LOM 402, 404, 406, 407, 411, 412, 415, 416, 420, 422-434, 437-447, 450-464			
D	1	C00226	WINDOW HEAT CONTROL RIGHT FRONT AC
E	1	C00224	WINDOW HEAT CONTROL LEFT FRONT AC

F/O Electrical System Panel, P6-11

Row	Col	Number	Name
LOM ALL			
B	9	C00228	WINDOW HEAT POWER LEFT FRONT

F/O Electrical System Panel, P6-12

Row	Col	Number	Name
B	8	C00394	WINDOW HEAT POWER RIGHT FRONT

——— END OF TASK ———

ECCN 9E991 BOEING PROPRIETARY - See title page for details

WINDSHIELD WIPER SYSTEM - ADJUSTMENT/TEST

1. General

A. This procedure has a task to do an operational test of the windshield wiper system.

TASK 30-42-00-700-801

2. Windshield Wiper System - Operational Test

(Figure 501)

A. Tools/Equipment

NOTE: When more than one tool part number is listed under the same "Reference" number, the tools shown are alternates to each other within the same airplane series. Tool part numbers that are replaced or non-procurable are preceded by "Opt:", which stands for Optional.

Reference	Description
COM-1523	Stand and Personnel Lifting Equipment - General Purpose Part #: B-14 Supplier: 05060 Part #: B-9 Supplier: 05060 Part #: Z-45-25J Supplier: 59497

B. Location Zones

Zone	Area
211	Flight Compartment - Left
212	Flight Compartment - Right

C. Windshield Wiper System - Operational Test

SUBTASK 30-42-00-860-002

WARNING BEFORE YOU DO MAINTENANCE ON THE WINDSHIELD WIPER SYSTEM, OPEN THE WINDOW HEAT CIRCUIT-BREAKERS. IF YOU DO NOT OPEN THESE CIRCUIT BREAKERS YOU CAN GET AN ELECTRICAL SHOCK WHEN YOU TOUCH THE WINDOW.

(1) Open these circuit breakers and install safety tags:

CAPT Electrical System Panel, P18-3

Row	Col	Number	Name
LOM 402, 404, 406, 407, 411, 412, 415, 416, 420, 422-434, 437-447, 450-464			
D	1	C00226	WINDOW HEAT CONTROL RIGHT FRONT AC
D	2	C00225	WINDOW HEAT CONTROL LEFT SIDE AC
E	1	C00224	WINDOW HEAT CONTROL LEFT FRONT AC
E	2	C00227	WINDOW HEAT CONTROL RIGHT SIDE AC

F/O Electrical System Panel, P6-11

Row	Col	Number	Name
LOM 404, 411, 412, 415, 423, 424, 427, 428, 439, 441, 464			
B	7	C01650	WINDOW HEAT POWER L3
LOM 402			
B	7	C00229	WINDOW HEAT POWER L3, L4 & L5
LOM ALL			
B	8	C00393	WINDOW HEAT POWER RIGHT SIDE
B	9	C00228	WINDOW HEAT POWER LEFT FRONT

ECCN 9E991 BOEING PROPRIETARY - See title page for details

F/O Electrical System Panel, P6-12

Row	Col	Number	Name
LOM 404, 411, 412, 415, 423, 424, 427, 428, 439, 441, 464			
B	7	C01649	WINDOW HEAT POWER R3
LOM 402			
B	7	C00395	WINDOW HEAT POWER R3, R4 & R5
LOM ALL			
B	8	C00394	WINDOW HEAT POWER RIGHT FRONT
B	9	C00392	WINDOW HEAT POWER LEFT SIDE

These circuit breakers are inoperative and should remain open:

F/O Electrical System Panel, P6-11

Row	Col	Number	Name
LOM 402 POST SB 737-56-1017			
B	7	C00229	WINDOW HEAT POWER L4 & L5 (INOP)

F/O Electrical System Panel, P6-12

Row	Col	Number	Name
B	7	C00395	WINDOW HEAT POWER R4 & R5 (INOP)

LOM ALL

SUBTASK 30-42-00-010-001

(2) Use a work platform, COM-1523, to get access to the windshield wiper.

SUBTASK 30-42-00-710-001

(3) Do these steps to make sure that the windshield wiper system operates correctly:

> **CAUTION** DO NOT OPERATE THE WIPER ON A DRY OR DIRTY WINDSHIELD. ALWAYS SUPPLY WATER TO THE WINDSHIELD BEFORE YOU OPERATE THE WIPER. THE WIPER WILL CAUSE DAMAGE TO THE WINDSHIELD.

(a) Supply a continuous spray of clean water to the windshield.

NOTE: For windshields with a hydrophobic coating, deionized or distilled water is recommended during the wiper test. Water with a high mineral content can cause marks on the coated glass surface that are difficult to remove. If water with a high mineral content is used on a windshield with a hydrophobic coating, flush the windshield surface after the wiper test with deionized or distilled water, or remove the remaining water on the windshield with a cotton cloth.

(b) Do these steps to test the intermittent speed operation of the wiper:

1) Set the windshield wiper switch to INT (P5 overhead panel flight compartment).

NOTE: The test for the pilot's and first officer's wipers are the same. Use the applicable wiper switch to operate the wiper.

2) Make sure that the wiper blade parks near the lower edge of the window during the off time of the intermittent cycle.

3) Make sure that the wiper blades have a minimum overlap of the windshield seal and do not contact metal structure.

4) Make sure that the operation of the wiper is smooth and it clears the water from the windshield.

ECCN 9E991 BOEING PROPRIETARY - See title page for details

5) Make sure that the wipers make two complete strokes every 6 to 8 seconds.

NOTE: One stroke = one wipe.

(c) Do these steps to test the low speed operation of the wiper:

1) Set the windshield wiper switch to LOW.

NOTE: In the LOW position, the wiper blade moves at approximately 160 strokes per minute.

2) Make sure that the operation of the wiper is smooth and it clears the water from the windshield.

NOTE: One stroke = one wipe.

(d) Do these steps to test the high speed operation of the wiper:

1) Set the windshield wiper switch to HIGH.

NOTE: In the HIGH position, the wiper blade moves at approximately 250 strokes per minute.

2) Make sure that the operation of the wiper is smooth and it clears the water from the windshield.

NOTE: One stroke = one wipe.

(e) Set the windshield wiper switch to LOW.

1) Make sure that the wipers go to low speed operation.

(f) Set the windshield wiper switch to INT.

1) Make sure that the wipers go to intermittent operation.

(g) Set the windshield wiper switch to PARK.

1) Make sure that the wiper blades park near the lower edge of the glass.

(h) Stop the water spray to the window.

D. Put the Airplane Back to Its Usual Condition

SUBTASK 30-42-00-860-003

(1) Remove the safety tags and close these circuit breakers:

CAPT Electrical System Panel, P18-3

Row	Col	Number	Name
LOM 402, 404, 406, 407, 411, 412, 415, 416, 420, 422-434, 437-447, 450-464			
D	1	C00226	WINDOW HEAT CONTROL RIGHT FRONT AC
D	2	C00225	WINDOW HEAT CONTROL LEFT SIDE AC
E	1	C00224	WINDOW HEAT CONTROL LEFT FRONT AC
E	2	C00227	WINDOW HEAT CONTROL RIGHT SIDE AC

F/O Electrical System Panel, P6-11

Row	Col	Number	Name
LOM 404, 411, 412, 415, 423, 424, 427, 428, 439, 441, 464			
B	7	C01650	WINDOW HEAT POWER L3
LOM 402			
B	7	C00229	WINDOW HEAT POWER L3, L4 & L5
LOM ALL			
B	8	C00393	WINDOW HEAT POWER RIGHT SIDE

ECCN 9E991 BOEING PROPRIETARY - See title page for details

(Continued)

F/O Electrical System Panel, P6-11

Row	Col	Number	Name
B	9	C00228	WINDOW HEAT POWER LEFT FRONT

F/O Electrical System Panel, P6-12

Row	Col	Number	Name
LOM 404, 411, 412, 415, 423, 424, 427, 428, 439, 441, 464			
B	7	C01649	WINDOW HEAT POWER R3
LOM 402			
B	7	C00395	WINDOW HEAT POWER R3, R4 & R5
LOM ALL			
B	8	C00394	WINDOW HEAT POWER RIGHT FRONT
B	9	C00392	WINDOW HEAT POWER LEFT SIDE

These circuit breakers are inoperative and should remain open:

F/O Electrical System Panel, P6-11

Row	Col	Number	Name
LOM 402 POST SB 737-56-1017			
B	7	C00229	WINDOW HEAT POWER L4 & L5 (INOP)

F/O Electrical System Panel, P6-12

Row	Col	Number	Name
B	7	C00395	WINDOW HEAT POWER R4 & R5 (INOP)

LOM ALL

——— END OF TASK ———

ECCN 9E991 BOEING PROPRIETARY - See title page for details

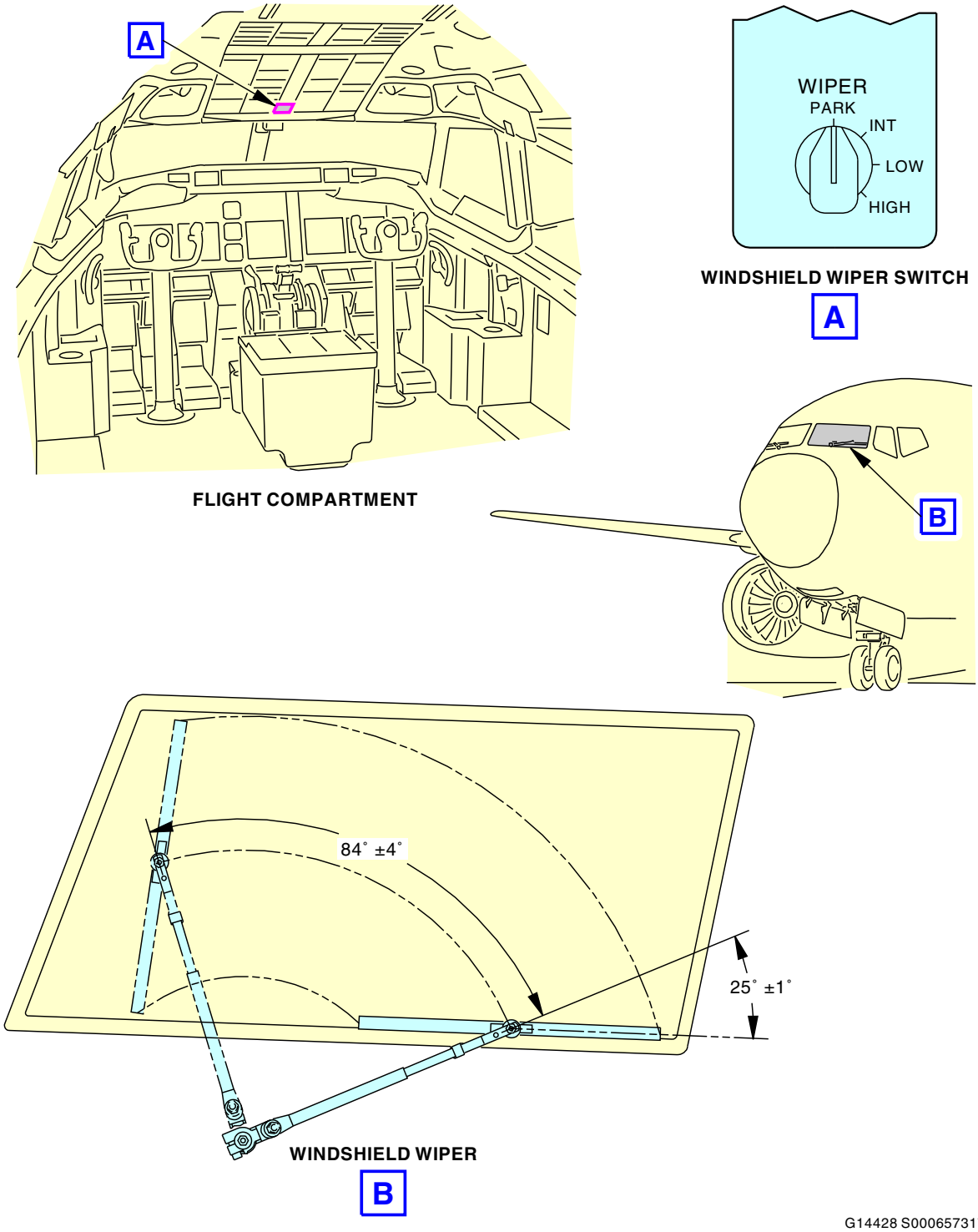

G14428 S0006573177_V2

Windshield Wipers Operational Test
Figure 501/30-42-00-990-801

ECCN 9E991 BOEING PROPRIETARY - See title page for details

WINDSHIELD WIPER BLADE - REMOVAL/INSTALLATION

1. General

A. This procedure has these tasks:

(1) A removal of the windshield wiper blade

(2) An installation of the windshield wiper blade.

TASK 30-42-11-020-801

2. Windshield Wiper Blade Removal

(Figure 401)

A. General

(1) This task gives instructions to remove the windshield wiper blade.

B. Location Zones

Zone	Area
211	Flight Compartment - Left
212	Flight Compartment - Right

C. Prepare for the Removal

SUBTASK 30-42-11-010-001

(1) Use a stand to reach the wiper blade.

SUBTASK 30-42-11-860-001

(2) Make sure that the windshield wiper switch is in the PARK position.

SUBTASK 30-42-11-860-002

> **WARNING**
> OPEN THE WINDOW HEAT CONTROL UNIT CIRCUIT BREAKERS. INJURIES TO PERSONNEL CAN OCCUR AND DAMAGE TO EQUIPMENT CAN OCCUR.

(3) Open these circuit breakers and install safety tags:

CAPT Electrical System Panel, P18-3

Row	Col	Number	Name
B	1	C00055	ANTI-ICE & RAIN WSHLD WIPER RIGHT
B	3	C00054	ANTI-ICE & RAIN WSHLD WIPER LEFT
C	1	C00523	HEATERS CAPT PITOT
LOM 402, 404, 406, 407, 411, 412, 415, 416, 420, 422-434, 437-447, 450-464			
D	1	C00226	WINDOW HEAT CONTROL RIGHT FRONT AC
D	2	C00225	WINDOW HEAT CONTROL LEFT SIDE AC
LOM ALL			
D	5	C00525	HEATERS F/O PITOT
D	6	C00524	HEATERS AUX PITOT
LOM 402, 404, 406, 407, 411, 412, 415, 416, 420, 422-434, 437-447, 450-464			
E	1	C00224	WINDOW HEAT CONTROL LEFT FRONT AC
E	2	C00227	WINDOW HEAT CONTROL RIGHT SIDE AC

ECCN 9E991 BOEING PROPRIETARY - See title page for details

F/O Electrical System Panel, P6-11

Row	Col	Number	Name
LOM 404, 411, 412, 415, 423, 424, 427, 428, 439, 441, 464			
B	7	C01650	WINDOW HEAT POWER L3
LOM 402			
B	7	C00229	WINDOW HEAT POWER L3, L4 & L5
LOM ALL			
B	8	C00393	WINDOW HEAT POWER RIGHT SIDE
B	9	C00228	WINDOW HEAT POWER LEFT FRONT

F/O Electrical System Panel, P6-12

Row	Col	Number	Name
LOM 404, 411, 412, 415, 423, 424, 427, 428, 439, 441, 464			
B	7	C01649	WINDOW HEAT POWER R3
LOM 402			
B	7	C00395	WINDOW HEAT POWER R3, R4 & R5
LOM ALL			
B	8	C00394	WINDOW HEAT POWER RIGHT FRONT
B	9	C00392	WINDOW HEAT POWER LEFT SIDE

These circuit breakers are inoperative and should remain open:

F/O Electrical System Panel, P6-11

Row	Col	Number	Name
LOM 402 POST SB 737-56-1017			
B	7	C00229	WINDOW HEAT POWER L4 & L5 (INOP)

F/O Electrical System Panel, P6-12

Row	Col	Number	Name
B	7	C00395	WINDOW HEAT POWER R4 & R5 (INOP)

LOM ALL

D. Windshield Wiper Blade Removal

SUBTASK 30-42-11-800-001

CAUTION DO NOT LIFT THE WINDSHIELD WIPER ARM ASSEMBLY MORE THAN NECESSARY OFF THE WINDSHIELD. DAMAGE TO THE WINDSHIELD ARM ASSEMBLY CAN OCCUR.

(1) Put a pad between the arm assembly [5] and windshield to prevent damage to the windshield surface.

(a) Make sure that the pad is of sufficient size to cover the windshield surface below the wiper blade.

SUBTASK 30-42-11-020-001

(2) Remove the nut [1] and washer [2].

(a) Discard the nut [1].

ECCN 9E991 BOEING PROPRIETARY - See title page for details

SUBTASK 30-42-11-020-002

(3) Remove the blade assembly [4].

SUBTASK 30-42-11-860-003

(4) Lower the wiper arm assembly [5] onto the pad.

END OF TASK

ECCN 9E991 BOEING PROPRIETARY - See title page for details

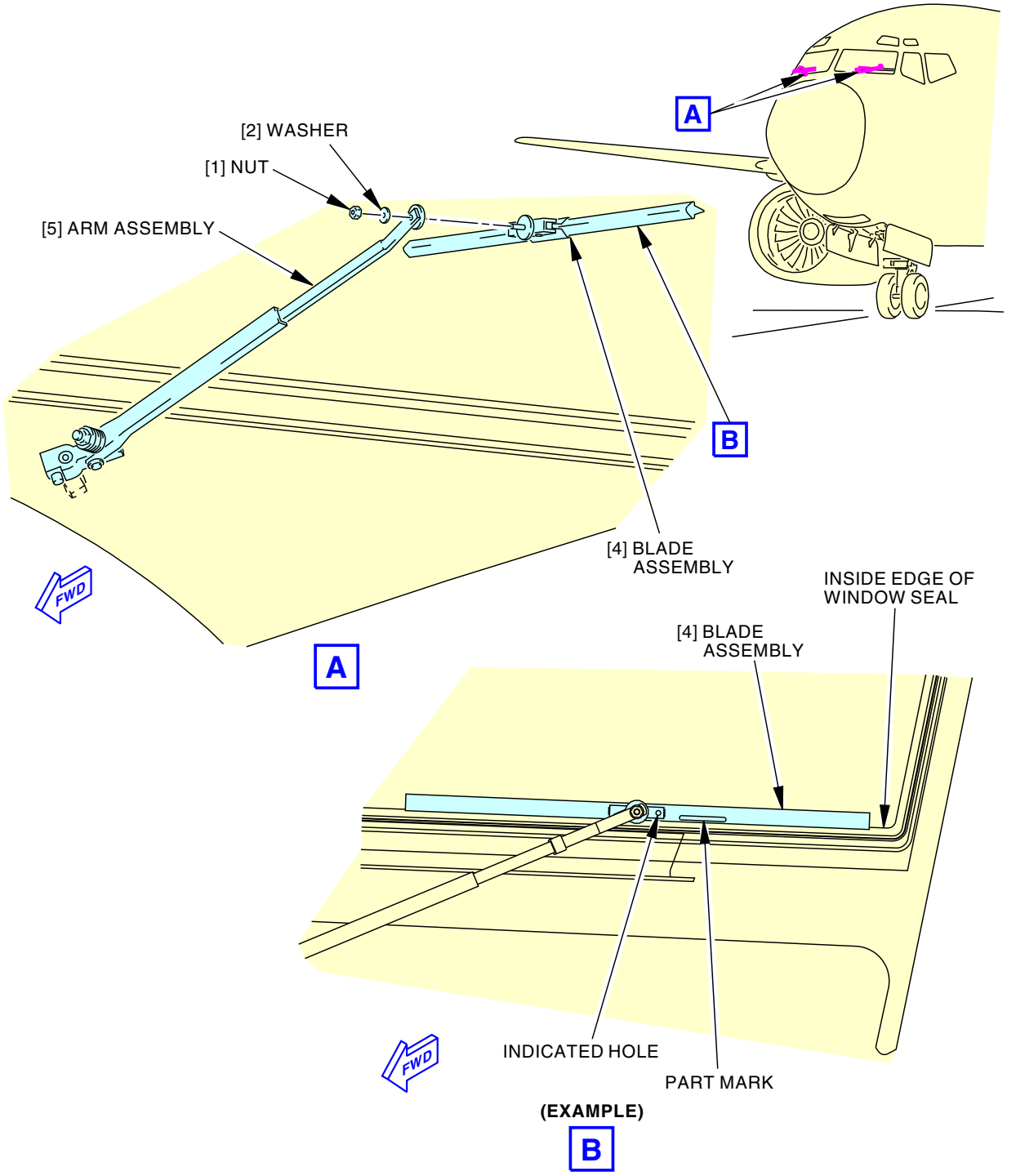

F39848 S0006573181_V4

Windshield Wiper Blade Assembly Installation
Figure 401/30-42-11-990-801

ECCN 9E991 BOEING PROPRIETARY - See title page for details

TASK 30-42-11-400-801

3. Windshield Wiper Blade Installation

(Figure 401)

A. General

(1) This task gives instructions to install the windshield wiper blade.

B. References

Reference	Title
30-42-31-820-801	Windshield Wiper Arm Force - Check/Adjustment (P/B 201)

C. Expendables/Parts

AMM Item	Description	AIPC Reference	AIPC Effectivity
1	Nut	30-42-11-01-014	LOM ALL
4	Blade assembly	30-42-11-01-010	LOM ALL

D. Location Zones

Zone	Area
211	Flight Compartment - Left
212	Flight Compartment - Right

E. Windshield Wiper Blade Installation

SUBTASK 30-42-11-420-002

(1) Set the blade assembly [4] on the arm assembly [5].

(a) Put the blade assembly [4] on the arm assembly [5] so that the blade assembly [4] is parallel to the lower edge of the windshield.

(b) Make sure that the part mark is near the inside edge of the window seal (away from pilot and first officers view).

NOTE: The part mark and indicated hole point to the left side of the aircraft for both the pilot and first officer wiper blade assemblies.

SUBTASK 30-42-11-210-003

(2) Make sure that the blade assembly [4] disc is properly engaged with the arm assembly [5] disc.

SUBTASK 30-42-11-420-003

(3) Install the washer [2] and new nut [1].

SUBTASK 30-42-11-420-004

CAUTION

IF YOU DO NOT USE THE CORRECT TORQUE, IT CAN CAUSE THE WIPER BLADE TO MOVE AND TURN. DAMAGE TO AIRCRAFT SKIN AND THE WINDSHIELD STRUCTURE CAN OCCUR.

(4) Tighten the nut [1] to 14 in-lb (1.6 N·m) - 18 in-lb (2.0 N·m).

SUBTASK 30-42-11-420-006

(5) Remove the pad from the windshield.

SUBTASK 30-42-11-860-005

(6) Remove the safety tags and close these circuit breakers:

CAPT Electrical System Panel, P18-3

Row	Col	Number	Name
B	1	C00055	ANTI-ICE & RAIN WSHLD WIPER RIGHT

ECCN 9E991 BOEING PROPRIETARY - See title page for details

(Continued)

CAPT Electrical System Panel, P18-3

Row	Col	Number	Name
B	3	C00054	ANTI-ICE & RAIN WSHLD WIPER LEFT
C	1	C00523	HEATERS CAPT PITOT
D	5	C00525	HEATERS F/O PITOT
D	6	C00524	HEATERS AUX PITOT

F. Windshield Wiper Blade Installation Test

SUBTASK 30-42-11-720-001

(1) Do a test of the blade assembly [4]:

> **CAUTION** DO NOT OPERATE THE WIPER ON A DRY WINDSHIELD. YOU CAN DAMAGE THE WINDSHIELD.

(a) Supply a continuous spray of clean water to the windshield.

NOTE: For windshields with a hydrophobic coating, deionized or distilled water is recommended during the wiper test. Water with a high mineral content can cause marks on the coated glass surface that are difficult to remove. If water with a high mineral content is used on a windshield with a hydrophobic coating, flush the windshield surface after the wiper test with deionized or distilled water, or remove the remaining water on the windshield with a cotton cloth.

(b) Turn the windshield wiper switch to the LOW position.

(c) Make sure that the operation of the blade assembly [4] is smooth and effective.

(d) Turn the switch to the PARK position.

SUBTASK 30-42-11-720-002

(2) Do this task: Windshield Wiper Arm Force - Check/Adjustment, TASK 30-42-31-820-801.

G. Put the Airplane Back to Its Usual Condition

SUBTASK 30-42-11-860-006

(1) Remove the safety tags and close these circuit breakers:

CAPT Electrical System Panel, P18-3

Row	Col	Number	Name
LOM 402, 404, 406, 407, 411, 412, 415, 416, 420, 422-434, 437-447, 450-464			
D	1	C00226	WINDOW HEAT CONTROL RIGHT FRONT AC
D	2	C00225	WINDOW HEAT CONTROL LEFT SIDE AC
E	1	C00224	WINDOW HEAT CONTROL LEFT FRONT AC
E	2	C00227	WINDOW HEAT CONTROL RIGHT SIDE AC

F/O Electrical System Panel, P6-11

Row	Col	Number	Name
LOM 404, 411, 412, 415, 423, 424, 427, 428, 439, 441, 464			
B	7	C01650	WINDOW HEAT POWER L3
LOM 402			
B	7	C00229	WINDOW HEAT POWER L3, L4 & L5

ECCN 9E991 BOEING PROPRIETARY - See title page for details

LOM 402 (Continued)

(Continued)

F/O Electrical System Panel, P6-11

Row	Col	Number	Name
LOM ALL			
B	8	C00393	WINDOW HEAT POWER RIGHT SIDE
B	9	C00228	WINDOW HEAT POWER LEFT FRONT

F/O Electrical System Panel, P6-12

Row	Col	Number	Name
LOM 404, 411, 412, 415, 423, 424, 427, 428, 439, 441, 464			
B	7	C01649	WINDOW HEAT POWER R3
LOM 402			
B	7	C00395	WINDOW HEAT POWER R3, R4 & R5
LOM ALL			
B	8	C00394	WINDOW HEAT POWER RIGHT FRONT
B	9	C00392	WINDOW HEAT POWER LEFT SIDE

These circuit breakers are inoperative and should remain open:

F/O Electrical System Panel, P6-11

Row	Col	Number	Name
LOM 402 POST SB 737-56-1017			
B	7	C00229	WINDOW HEAT POWER L4 & L5 (INOP)

F/O Electrical System Panel, P6-12

Row	Col	Number	Name
B	7	C00395	WINDOW HEAT POWER R4 & R5 (INOP)

END OF TASK

ECCN 9E991 BOEING PROPRIETARY - See title page for details

WINDSHIELD WIPER BLADE - INSPECTION/CHECK

1. **General**
   A. This procedure contains the following task:
      (1) Windshield Wiper Blade Inspection.

TASK 30-42-11-200-801

2. **Windshield Wiper Blade - Inspection/Check**
(Figure 601)

A. General

(1) This task gives instructions to inspect the windshield wiper blades.

B. References

Reference	Title
30-42-11-020-801	Windshield Wiper Blade Removal (P/B 401)
30-42-11-400-801	Windshield Wiper Blade Installation (P/B 401)
30-42-31-000-801	Windshield Wiper Arm - Removal (P/B 201)
30-42-31-400-801	Windshield Wiper Arm - Installation (P/B 201)

C. Consumable Materials

Reference	Description	Specification
G01043	Cloth - Lint-free	

D. Location Zones

Zone	Area
211	Flight Compartment - Left
212	Flight Compartment - Right

E. Prepare for the Inspection

SUBTASK 30-42-11-860-009

(1) Make sure that the applicable windshield wiper control switch is in the PARK position.

SUBTASK 30-42-11-860-010

> **WARNING**
> BEFORE YOU DO MAINTENANCE ON THE WINDSHIELD WIPER SYSTEM, OPEN THE WINDOW HEAT CIRCUIT-BREAKERS. IF YOU DO NOT OPEN THESE CIRCUIT BREAKERS YOU CAN GET AN ELECTRICAL SHOCK WHEN YOU TOUCH THE WINDOW.

(2) Open these circuit breakers and install safety tags:

CAPT Electrical System Panel, P18-3

Row	Col	Number	Name
B	1	C00055	ANTI-ICE & RAIN WSHLD WIPER RIGHT
B	3	C00054	ANTI-ICE & RAIN WSHLD WIPER LEFT
C	1	C00523	HEATERS CAPT PITOT
D	5	C00525	HEATERS F/O PITOT
D	6	C00524	HEATERS AUX PITOT

ECCN 9E991 BOEING PROPRIETARY - See title page for details

F/O Electrical System Panel, P6-11

Row	Col	Number	Name
LOM 404, 411, 412, 415, 423, 424, 427, 428, 439, 441, 464			
B	7	C01650	WINDOW HEAT POWER L3
LOM 402			
B	7	C00229	WINDOW HEAT POWER L3, L4 & L5
LOM ALL			
B	8	C00393	WINDOW HEAT POWER RIGHT SIDE
B	9	C00228	WINDOW HEAT POWER LEFT FRONT

F/O Electrical System Panel, P6-12

Row	Col	Number	Name
LOM 404, 411, 412, 415, 423, 424, 427, 428, 439, 441, 464			
B	7	C01649	WINDOW HEAT POWER R3
LOM 402			
B	7	C00395	WINDOW HEAT POWER R3, R4 & R5
LOM ALL			
B	8	C00394	WINDOW HEAT POWER RIGHT FRONT
B	9	C00392	WINDOW HEAT POWER LEFT SIDE

These circuit breakers are inoperative and should remain open:

F/O Electrical System Panel, P6-11

Row	Col	Number	Name
LOM 402 POST SB 737-56-1017			
B	7	C00229	WINDOW HEAT POWER L4 & L5 (INOP)

F/O Electrical System Panel, P6-12

Row	Col	Number	Name
B	7	C00395	WINDOW HEAT POWER R4 & R5 (INOP)

LOM ALL

F. Windshield Wiper Blade Inspection

SUBTASK 30-42-11-010-003

> **CAUTION** DO NOT LIFT THE ARM ASSEMBLY MORE THAN NECESSARY TO LIFT THE ARM OFF THE WINDSHIELD. YOU CAN CAUSE DAMAGE TO THE ARM ASSEMBLY AND MAKE IT UNSERVICEABLE.

(1) Use a stand to reach and lift the wiper arm.

SUBTASK 30-42-11-200-001

(2) Check the tension and general condition of the wiper blade [1].

(a) If the wiper blade [1] is damaged or worn, replace the wiper blade [1] (TASK 30-42-11-020-801 and TASK 30-42-11-400-801).

ECCN 9E991 BOEING PROPRIETARY - See title page for details

SUBTASK 30-42-11-210-001

(3) Make sure that the part mark is near the inside edge of the window seal (away from pilot and first officers view).

NOTE: The part mark and indicated hole should point to the left side of the aircraft for both the pilot and first officer wiper blade assemblies.

SUBTASK 30-42-11-210-002

CAUTION

MAKE SURE THAT YOU ENGAGE THE BLADE ASSEMBLY DISC CORRECTLY WITH THE ARM ASSEMBLY DISC. IF YOU DO NOT OBEY THIS INSTRUCTION, DAMAGE TO THE AIRPLANE SKIN CAN OCCUR.

(4) Make sure that the wiper blade [1] disc is properly engaged with the wiper arm disc.

(a) If the blade discs are damaged or worn, replace the discs on the wiper blade [1] (TASK 30-42-11-020-801 and TASK 30-42-11-400-801).

(b) If the wiper arm disc is damaged or worn, replace the wiper arm disc (TASK 30-42-31-000-801 and TASK 30-42-31-400-801).

SUBTASK 30-42-11-420-007

CAUTION

IF YOU DO NOT USE THE CORRECT TORQUE, IT CAN CAUSE THE WIPER BLADE TO MOVE AND TURN. DAMAGE TO AIRCRAFT SKIN AND THE WINDSHIELD STRUCTURE CAN OCCUR.

(5) Make sure that the wiper blade [1] is tightly attached to the wiper arm.

(a) If it is necessary, tighten the nut [2] to 16 ±2 in-lb (1.8 ±0.2 N·m).

SUBTASK 30-42-11-160-001

WARNING

USE EYE PROTECTION WHEN YOU USE COMPRESSED AIR TO CLEAN, COOL, OR DRY PARTS OR TOOLS. PARTICLES CAN CAUSE AN INJURY TO YOUR EYES. DO NOT POINT COMPRESSED AIR AT YOURSELF OR OTHER PERSONS.

(6) If it is necessary, clean the wiper blade [1] with a lint-free cloth, G01043, or with compressed air.

G. Put the Airplane Back to Its Usual Condition

SUBTASK 30-42-11-860-011

(1) Remove the safety tags and close these circuit breakers:

CAPT Electrical System Panel, P18-3

Row	Col	Number	Name
B	1	C00055	ANTI-ICE & RAIN WSHLD WIPER RIGHT
B	3	C00054	ANTI-ICE & RAIN WSHLD WIPER LEFT
C	1	C00523	HEATERS CAPT PITOT
D	5	C00525	HEATERS F/O PITOT
D	6	C00524	HEATERS AUX PITOT

ECCN 9E991 BOEING PROPRIETARY - See title page for details

F/O Electrical System Panel, P6-11

Row	Col	Number	Name
LOM 404, 411, 412, 415, 423, 424, 427, 428, 439, 441, 464			
B	7	C01650	WINDOW HEAT POWER L3
LOM 402			
B	7	C00229	WINDOW HEAT POWER L3, L4 & L5
LOM ALL			
B	8	C00393	WINDOW HEAT POWER RIGHT SIDE
B	9	C00228	WINDOW HEAT POWER LEFT FRONT

F/O Electrical System Panel, P6-12

Row	Col	Number	Name
LOM 404, 411, 412, 415, 423, 424, 427, 428, 439, 441, 464			
B	7	C01649	WINDOW HEAT POWER R3
LOM 402			
B	7	C00395	WINDOW HEAT POWER R3, R4 & R5
LOM ALL			
B	8	C00394	WINDOW HEAT POWER RIGHT FRONT
B	9	C00392	WINDOW HEAT POWER LEFT SIDE

These circuit breakers are inoperative and should remain open:

F/O Electrical System Panel, P6-11

Row	Col	Number	Name
LOM 402 POST SB 737-56-1017			
B	7	C00229	WINDOW HEAT POWER L4 & L5 (INOP)

F/O Electrical System Panel, P6-12

Row	Col	Number	Name
B	7	C00395	WINDOW HEAT POWER R4 & R5 (INOP)

LOM ALL

——— END OF TASK ———

ECCN 9E991 BOEING PROPRIETARY - See title page for details

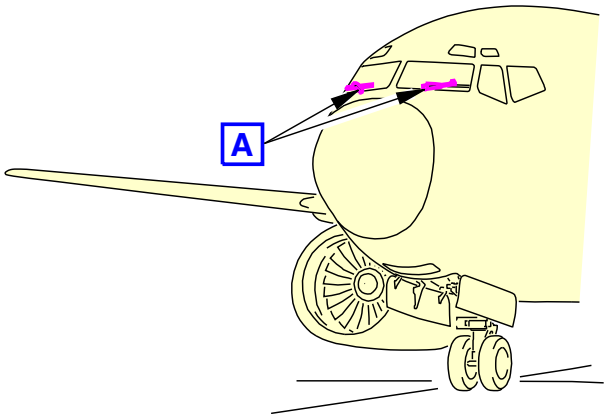

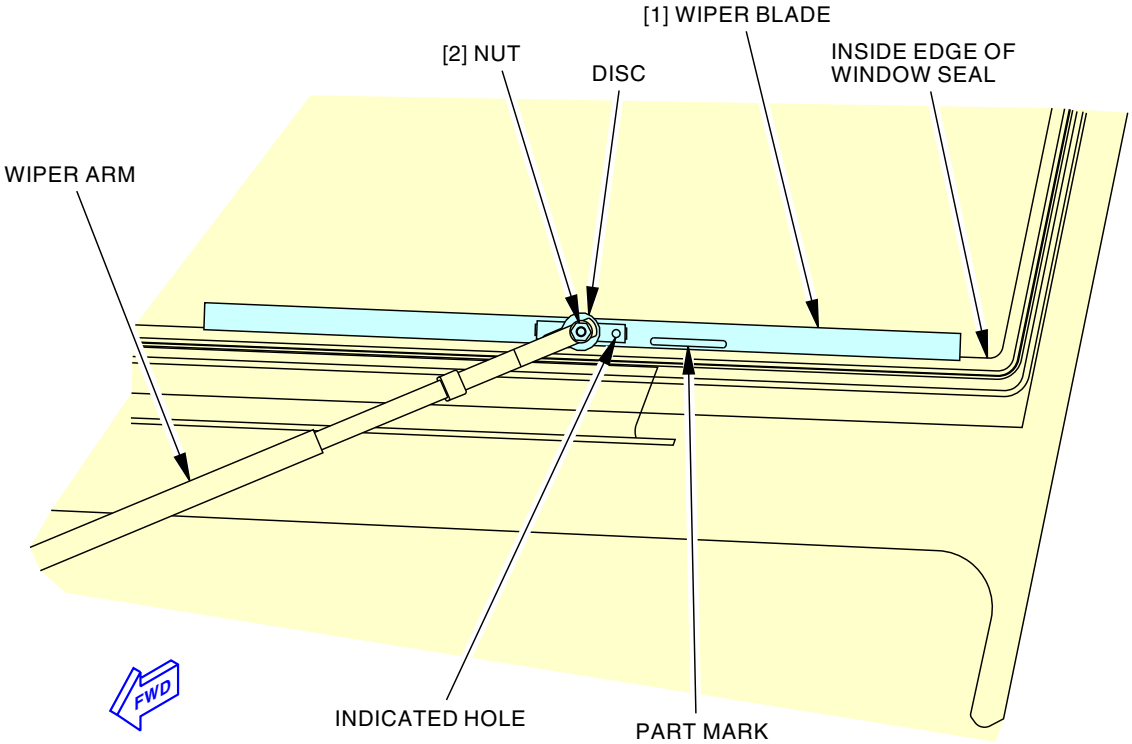

(EXAMPLE)

A

2948909 S0000724546_V2

Windshield Wiper Blade Inspection
Figure 601/30-42-11-990-802

ECCN 9E991 BOEING PROPRIETARY - See title page for details

WINDSHIELD WIPER MOTOR/CONVERTER - REMOVAL/INSTALLATION

1. **General**
   A. This procedure has these tasks:
      (1) Wiper Motor/Converter Removal
      (2) Wiper Motor/Converter Installation.

TASK 30-42-21-000-801

2. **Wiper Motor/Converter Removal**
(Figure 401)

A. General
(1) This task gives instructions to remove the Wiper Motor/Converter
(2) You must do the wiper arm removal (TASK 30-42-31-000-801) before you do this task.

B. References

Reference	Title
30-42-31-000-801	Windshield Wiper Arm - Removal (P/B 201)
31-62-11-000-801	Display Unit Removal (P/B 401)

C. Tools/Equipment

NOTE: When more than one tool part number is listed under the same "Reference" number, the tools shown are alternates to each other within the same airplane series. Tool part numbers that are replaced or non-procurable are preceded by "Opt:", which stands for Optional.

Reference	Description
COM-2481	Sealant Removal Tool (Meets BSS7384 Requirements) Part #: 1-6390-A Supplier: 63318 Part #: 10810 Supplier: $0855 Part #: 10811 Supplier: $0855 Part #: 10812 Supplier: $0855 Part #: 234350 Supplier: 5HCF1 Part #: 235072 Supplier: 5HCF1 Part #: 235073 Supplier: 5HCF1 Part #: 235074 Supplier: 5HCF1 Part #: 235075 Supplier: 5HCF1 Part #: 235076 Supplier: 5HCF1 Part #: 311/03 Supplier: F6892 Part #: 311/14 Supplier: F6892 Part #: 311/25 Supplier: F6892 Part #: 311/37 Supplier: F6892 Part #: AS1 Supplier: $1351 Part #: AS2 Supplier: $1351 Part #: AS3 Supplier: $1351 Part #: DAD5013 Supplier: 7RKH2 Part #: DFD5019 Supplier: 7RKH2 Part #: JNT411B60 Supplier: 3DN12 Part #: JNT411B90 Supplier: 3DN12 Part #: PT6529-S Supplier: 81205 Part #: SCD5019 Supplier: 7RKH2 Part #: ST982LF-9 Supplier: 81205 Part #: TS1275-4 Supplier: 22975

ECCN 9E991 BOEING PROPRIETARY - See title page for details

D. Location Zones

Zone	Area
211	Flight Compartment - Left
212	Flight Compartment - Right

E. Prepare for the Removal

SUBTASK 30-42-21-860-001

> **WARNING** BEFORE YOU DO MAINTENANCE ON THE WINDSHIELD WIPER SYSTEM, OPEN THE WINDOW HEAT CIRCUIT BREAKERS. IF YOU DO NOT OPEN THESE CIRCUIT BREAKERS DURING MAINTENANCE, YOU CAN GET AN ELECTRICAL SHOCK WHEN YOU TOUCH THE WINDOW.

(1) Open these circuit breakers and install safety tags:

CAPT Electrical System Panel, P18-3

Row	Col	Number	Name
C	1	C00523	HEATERS CAPT PITOT
LOM 402, 404, 406, 407, 411, 412, 415, 416, 420, 422-434, 437-447, 450-464			
D	1	C00226	WINDOW HEAT CONTROL RIGHT FRONT AC
D	2	C00225	WINDOW HEAT CONTROL LEFT SIDE AC
LOM ALL			
D	5	C00525	HEATERS F/O PITOT
D	6	C00524	HEATERS AUX PITOT
LOM 402, 404, 406, 407, 411, 412, 415, 416, 420, 422-434, 437-447, 450-464			
E	1	C00224	WINDOW HEAT CONTROL LEFT FRONT AC
E	2	C00227	WINDOW HEAT CONTROL RIGHT SIDE AC

F/O Electrical System Panel, P6-11

Row	Col	Number	Name
LOM 404, 411, 412, 415, 423, 424, 427, 428, 439, 441, 464			
B	7	C01650	WINDOW HEAT POWER L3
LOM 402			
B	7	C00229	WINDOW HEAT POWER L3, L4 & L5
LOM ALL			
B	8	C00393	WINDOW HEAT POWER RIGHT SIDE
B	9	C00228	WINDOW HEAT POWER LEFT FRONT

F/O Electrical System Panel, P6-12

Row	Col	Number	Name
LOM 404, 411, 412, 415, 423, 424, 427, 428, 439, 441, 464			
B	7	C01649	WINDOW HEAT POWER R3
LOM 402			
B	7	C00395	WINDOW HEAT POWER R3, R4 & R5
LOM ALL			
B	8	C00394	WINDOW HEAT POWER RIGHT FRONT
B	9	C00392	WINDOW HEAT POWER LEFT SIDE

ECCN 9E991 BOEING PROPRIETARY - See title page for details

These circuit breakers are inoperative and should remain open:

F/O Electrical System Panel, P6-11

Row	Col	Number	Name
LOM 402 POST SB 737-56-1017			
B	7	C00229	WINDOW HEAT POWER L4 & L5 (INOP)

F/O Electrical System Panel, P6-12

Row	Col	Number	Name
B	7	C00395	WINDOW HEAT POWER R4 & R5 (INOP)

LOM ALL

SUBTASK 30-42-21-860-002

(2) For the left windshield wiper motor/convertor:

Open this circuit breaker and install safety tag:

CAPT Electrical System Panel, P18-3

Row	Col	Number	Name
B	3	C00054	ANTI-ICE & RAIN WSHLD WIPER LEFT

SUBTASK 30-42-21-860-003

(3) For the right windshield wiper motor/convertor:

Open this circuit breaker and install safety tag:

CAPT Electrical System Panel, P18-3

Row	Col	Number	Name
B	1	C00055	ANTI-ICE & RAIN WSHLD WIPER RIGHT

SUBTASK 30-42-21-020-001

(4) Remove the windshield wiper arm. To remove the wiper arm, do this task: Windshield Wiper Arm - Removal, TASK 30-42-31-000-801.

SUBTASK 30-42-21-010-001

(5) Remove the display unit. To remove the unit, do this task: Display Unit Removal, TASK 31-62-11-000-801.

SUBTASK 30-42-21-020-006

(6) Remove the P1-3 panel for Captain side and P3-1 panel for F/O side.

F. Wiper Motor/Converter Removal

SUBTASK 30-42-21-150-001

CAUTION

BE CAREFUL WHEN YOU REMOVE THE SEAL WITH THE SEALANT REMOVAL TOOL. DAMAGE TO THE AIRPLANE SKIN CAN OCCUR.

(1) Remove the sealant, with a sealant removal tool, COM-2481, from the area around the wiper motor shaft on the outside of the airplane.

SUBTASK 30-42-21-020-002

(2) Remove the ground wire from the wiper motor.

(a) Remove the nut [4] and washer [5].

ECCN 9E991 BOEING PROPRIETARY - See title page for details

SUBTASK 30-42-21-020-003

(3) Remove the electrical connector [6].

SUBTASK 30-42-21-020-004

(4) Remove the screws [2] and washers [3].

SUBTASK 30-42-21-020-005

CAUTION	YOU MUST BE CAREFUL WHEN YOU REMOVE THE WIPER MOTOR/ CONVERTER. THE WIPER SHAFT MAY TEAR THE RUBBER SEAL WHERE THE SHAFT PIERCES THE AIRPLANE SKIN.

(5) Remove the wiper motor converter [1].

END OF TASK

ECCN 9E991 BOEING PROPRIETARY - See title page for details

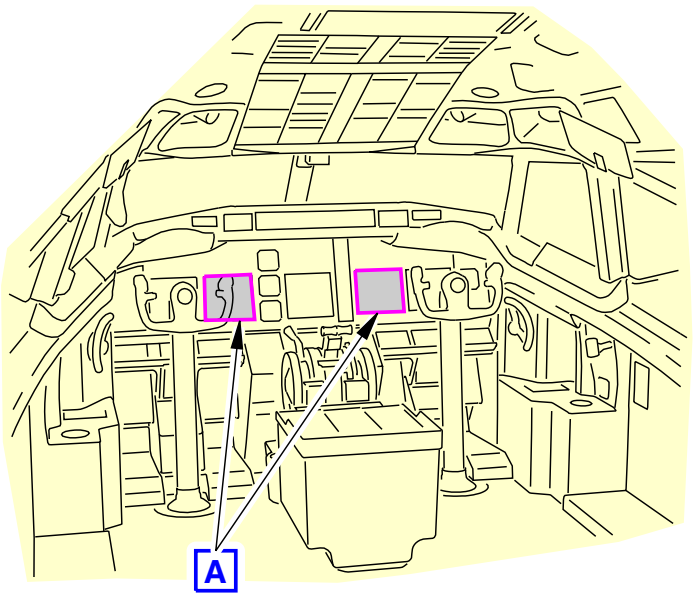

FLIGHT COMPARTMENT

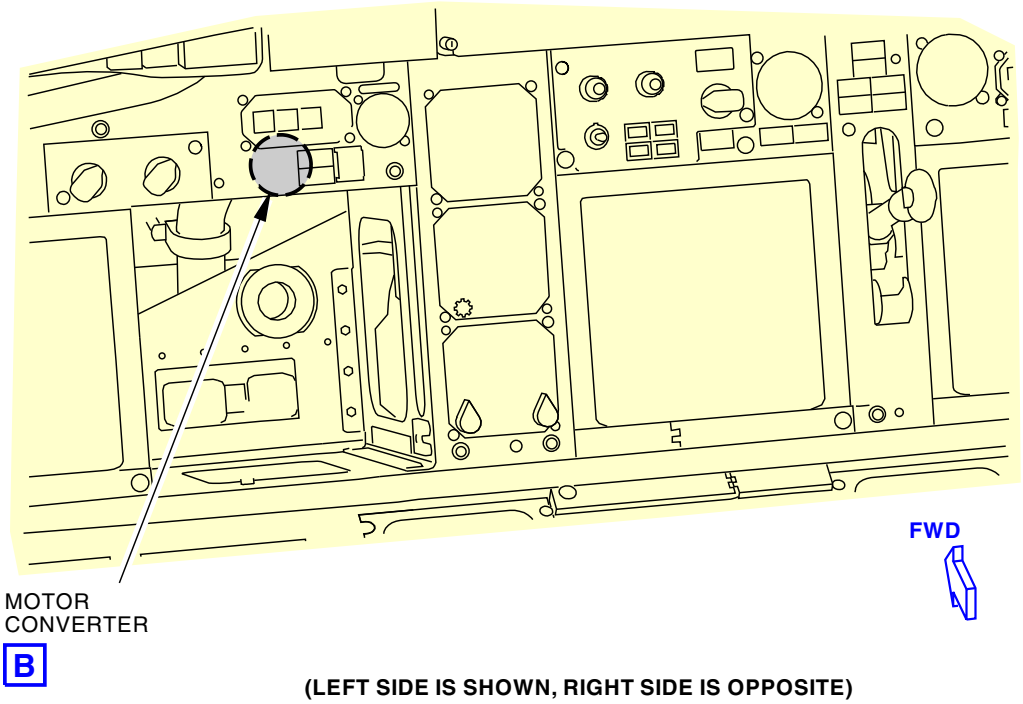

(LEFT SIDE IS SHOWN, RIGHT SIDE IS OPPOSITE)

A

F39835 S0006573186_V2

Windshield Wiper Motor/Converter Installation
Figure 401/30-42-21-990-801 (Sheet 1 of 2)

ECCN 9E991 BOEING PROPRIETARY - See title page for details

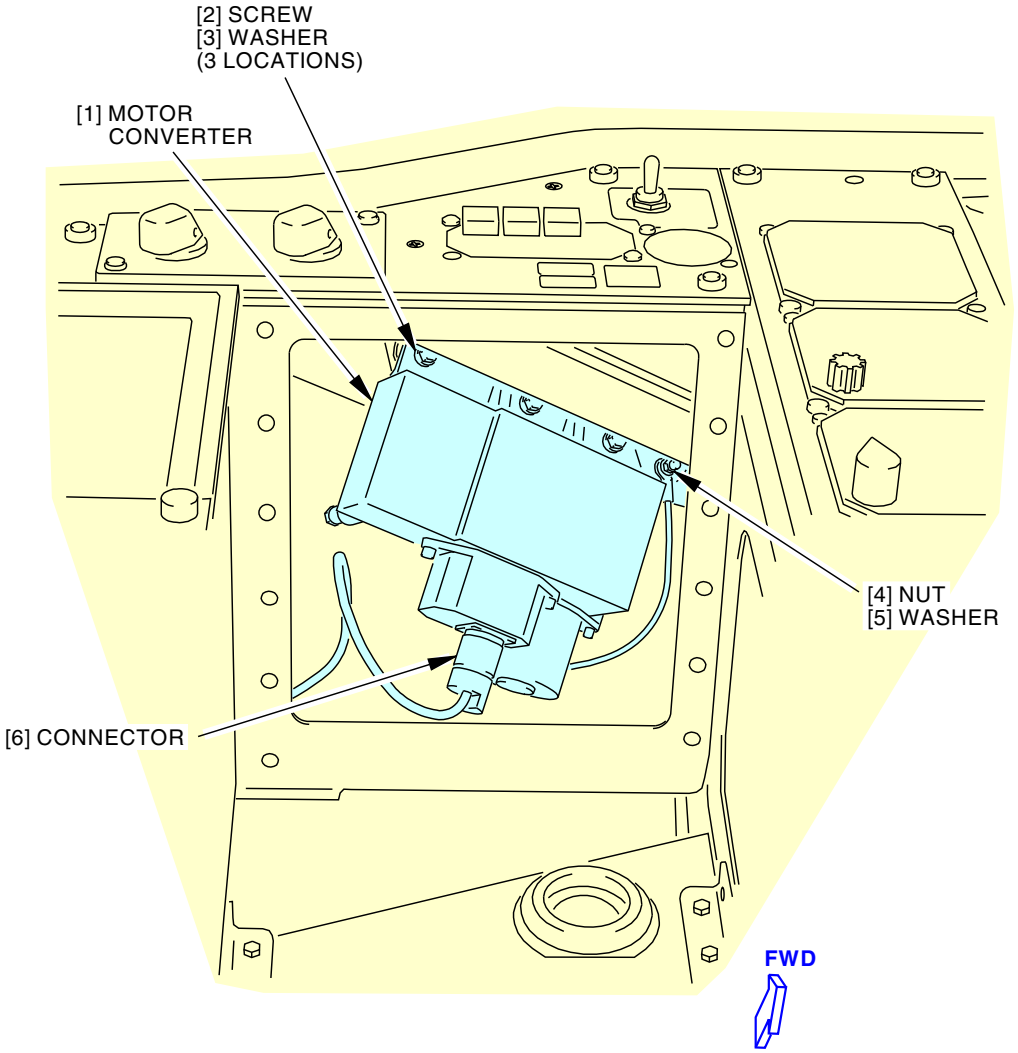

MOTOR CONVERTER
(EXAMPLE)

B

F91042 S0006573187_V2

Windshield Wiper Motor/Converter Installation
Figure 401/30-42-21-990-801 (Sheet 2 of 2)

ECCN 9E991 BOEING PROPRIETARY - See title page for details

TASK 30-42-21-400-801

3. Wiper Motor/Converter Installation

(Figure 401)

A. General

(1) This task gives instructions to install the Wiper Motor/Converter.

B. References

Reference	Title
20-30-92-910-801	Final Cleaning Prior to General Sealing (Series 92) (P/B 201)
24-22-00-860-813	Supply External Power (P/B 201)
30-42-31-400-801	Windshield Wiper Arm - Installation (P/B 201)
31-62-11-400-801	Display Unit Installation (P/B 401)
51-31-00-160-801	Prepare For Sealing (P/B 201)
SWPM 20-20-00	ELECTRICAL BONDING PROCESSES

C. Tools/Equipment

NOTE: When more than one tool part number is listed under the same "Reference" number, the tools shown are alternates to each other within the same airplane series. Tool part numbers that are replaced or non-procurable are preceded by "Opt:", which stands for Optional.

Reference	Description
COM-1550	Bonding Meter - Approved, Intrinsically Safe (Approved for use in Class I, Divisions I & II hazardous (classified) locations. Outside these hazardous locations, COM-614 can be used in lieu of COM-1550). Part #: 620LK Supplier: 1CRL2 Part #: M1 Supplier: 3AD17 Part #: M1B Supplier: 3AD17 Part #: T477W (C15292) Supplier: 06659
STD-810	Spatula - Fillet Smoothing, Hardwood or Plastic
STD-7413	Sealing gun - 6-inch length cartridge, Semco Research or equivalent

D. Consumable Materials

Reference	Description	Specification
A00247	Sealant - Pressure And Environmental - Chromate Type	BMS5-95
B00130	Alcohol - Isopropyl	TT-I-735
B01012	Solvent - Final Cleaning Prior To General Sealing (AMM 20-30-92) - Series 92	
G00034	Cotton Wiper - Process Cleaning Absorbent Wiper (Cheesecloth, Gauze)	AMS3819 Class 1 Grade A or B Form 1 (Supersede BMS15-5 CL A)
G00291	Tape - Aluminum Foil, 3M 425	AMS-T-23397 / L-T-80

I **E. Location Zones**

Zone	Area
211	Flight Compartment - Left
212	Flight Compartment - Right

ECCN 9E991 BOEING PROPRIETARY - See title page for details

F. Wiper Motor/Converter Installation

SUBTASK 30-42-21-100-001

> **CAUTION** BE CAREFUL WHEN YOU INSTALL OR REMOVE THE WIPER MOTOR/ CONVERTER. THE WIPER SHAFT CAN TEAR THE RUBBER SEAL. IF YOU OPERATE THE WIPER MOTOR/ CONVERTER WITH A BROKEN SEAL, DAMAGE TO THE EQUIPMENT CAN OCCUR.

(1) Put the wiper motor converter [1] into position.

SUBTASK 30-42-21-400-001

(2) Install the screws [2] and washers [3].

SUBTASK 30-42-21-100-002

(3) Clean the ground wire terminal mating surface and the ground stud on the airplane structure (SWPM 20-20-00).

(a) Use a cotton wiper, G00034, made moist with alcohol, B00130.

(b) Immediately dry the surfaces with a new cotton wiper, G00034.

SUBTASK 30-42-21-420-001

(4) Connect the ground wire to the wiper motor converter [1].

(a) Attach the ground wire with the nut [4] and washer [5].

SUBTASK 30-42-21-760-001

(5) Use an intrinsically safe approved bonding meter, COM-1550, to make sure that the resistance between the wiper motor converter [1] and the airplane structure is 0.001 ohm (1.0 milliohm), or less.

SUBTASK 30-42-21-420-002

(6) Connect the electrical connector [6] to the wiper motor converter [1].

G. Wiper Motor/Converter Installation Test

SUBTASK 30-42-21-710-001

(1) Do these steps to make sure that the wiper motor converter [1] operates:

(a) Do this task: Supply External Power, TASK 24-22-00-860-813.

(b) Remove the safety tags and close these circuit breakers:

CAPT Electrical System Panel, P18-3

Row	Col	Number	Name
B	1	C00055	ANTI-ICE & RAIN WSHLD WIPER RIGHT
B	3	C00054	ANTI-ICE & RAIN WSHLD WIPER LEFT

(c) Set the windshield wiper switch to LOW.

(d) Make sure that the wiper motor converter [1] operates.

(e) Turn the windshield wiper switch to PARK.

SUBTASK 30-42-21-410-002

(2) Re-install the P1-3 panel for Captain side and P3-1 panel for F/O side.

SUBTASK 30-42-21-410-001

(3) Re-install the display unit (TASK 31-62-11-400-801).

SUBTASK 30-42-21-390-001

(4) Apply sealant, A00247, to the wiper motor shaft.

(a) Make sure that the area around the wiper motor shaft is clean (TASK 51-31-00-160-801).

ECCN 9E991 BOEING PROPRIETARY - See title page for details

(b) Use a sealant gun, STD-7413, to fill the gap between the wiper motor shaft and the airplane skin with sealant, A00247.

1) Apply sealant, A00247, completely around the wiper motor shaft.

2) Make sure that all gaps are completely filled.

(c) Use a hardwood or plastic fillet smoothing spatula, STD-810, to make a smooth surface on the sealant.

(d) Remove all excess sealant with a clean cotton wiper, G00034, that is wet with Series 92 solvent, B01012 (TASK 20-30-92-910-801).

SUBTASK 30-42-21-420-003

(5) Re-install the windshield wiper arm (TASK 30-42-31-400-801).

SUBTASK 30-42-21-410-003

(6) If you must send the airplane before the sealant is fully cured, install 3M 425 Aluminum Foil Tape, G00291 on top of the sealant.

(a) Remove the 3M 425 Aluminum Foil Tape, G00291 when the sealant is fully cured.

NOTE: The use of 3M 425 Aluminum Foil Tape, G00291 is not intended for long term use but only until the sealant is cured.

H. Put the Airplane Back to its Usual Condition

SUBTASK 30-42-21-860-004

(1) Remove the safety tags and close these circuit breakers:

CAPT Electrical System Panel, P18-3

Row	Col	Number	Name
C	1	C00523	HEATERS CAPT PITOT
LOM 402, 404, 406, 407, 411, 412, 415, 416, 420, 422-434, 437-447, 450-464			
D	1	C00226	WINDOW HEAT CONTROL RIGHT FRONT AC
D	2	C00225	WINDOW HEAT CONTROL LEFT SIDE AC
LOM ALL			
D	5	C00525	HEATERS F/O PITOT
D	6	C00524	HEATERS AUX PITOT
LOM 402, 404, 406, 407, 411, 412, 415, 416, 420, 422-434, 437-447, 450-464			
E	1	C00224	WINDOW HEAT CONTROL LEFT FRONT AC
E	2	C00227	WINDOW HEAT CONTROL RIGHT SIDE AC

F/O Electrical System Panel, P6-11

Row	Col	Number	Name
LOM 404, 411, 412, 415, 423, 424, 427, 428, 439, 441, 464			
B	7	C01650	WINDOW HEAT POWER L3
LOM 402			
B	7	C00229	WINDOW HEAT POWER L3, L4 & L5
LOM ALL			
B	8	C00393	WINDOW HEAT POWER RIGHT SIDE
B	9	C00228	WINDOW HEAT POWER LEFT FRONT

ECCN 9E991 BOEING PROPRIETARY - See title page for details

F/O Electrical System Panel, P6-12

Row	Col	Number	Name
LOM 404, 411, 412, 415, 423, 424, 427, 428, 439, 441, 464			
B	7	C01649	WINDOW HEAT POWER R3
LOM 402			
B	7	C00395	WINDOW HEAT POWER R3, R4 & R5
LOM ALL			
B	8	C00394	WINDOW HEAT POWER RIGHT FRONT
B	9	C00392	WINDOW HEAT POWER LEFT SIDE

These circuit breakers are inoperative and should remain open:

F/O Electrical System Panel, P6-11

Row	Col	Number	Name
LOM 402 POST SB 737-56-1017			
B	7	C00229	WINDOW HEAT POWER L4 & L5 (INOP)

F/O Electrical System Panel, P6-12

Row	Col	Number	Name
B	7	C00395	WINDOW HEAT POWER R4 & R5 (INOP)

END OF TASK

ECCN 9E991 BOEING PROPRIETARY - See title page for details

WINDSHIELD WIPER ARM - MAINTENANCE PRACTICES

1. General

A. This procedure has these tasks:

(1) Windshield Wiper Arm Removal

(2) Windshield Wiper Arm Installation

(3) Windshield Wiper Arm Force Check/Adjustment

(4) Windshield Wiper Arm Position Adjustment.

TASK 30-42-31-000-801

2. Windshield Wiper Arm - Removal

(Figure 201)

A. References

Reference	Title
30-42-11-020-801	Windshield Wiper Blade Removal (P/B 401)

B. Location Zones

Zone	Area
211	Flight Compartment - Left
212	Flight Compartment - Right

C. Prepare for the Removal

SUBTASK 30-42-31-860-001

> **WARNING** BEFORE YOU DO MAINTENANCE ON THE WINDSHIELD WIPER SYSTEM, OPEN THE WINDOW HEAT CIRCUIT-BREAKERS. IF YOU DO NOT OPEN THESE CIRCUIT BREAKERS YOU CAN GET AN ELECTRICAL SHOCK WHEN YOU TOUCH THE WINDOW.

(1) Open these circuit breakers and install safety tags:

CAPT Electrical System Panel, P18-3

Row	Col	Number	Name
C	1	C00523	HEATERS CAPT PITOT
LOM 402, 404, 406, 407, 411, 412, 415, 416, 420, 422-434, 437-447, 450-464			
D	1	C00226	WINDOW HEAT CONTROL RIGHT FRONT AC
D	2	C00225	WINDOW HEAT CONTROL LEFT SIDE AC
LOM ALL			
D	5	C00525	HEATERS F/O PITOT
D	6	C00524	HEATERS AUX PITOT
LOM 402, 404, 406, 407, 411, 412, 415, 416, 420, 422-434, 437-447, 450-464			
E	1	C00224	WINDOW HEAT CONTROL LEFT FRONT AC
E	2	C00227	WINDOW HEAT CONTROL RIGHT SIDE AC

F/O Electrical System Panel, P6-11

Row	Col	Number	Name
LOM 404, 411, 412, 415, 423, 424, 427, 428, 439, 441, 464			
B	7	C01650	WINDOW HEAT POWER L3

ECCN 9E991 BOEING PROPRIETARY - See title page for details

LOM 404, 411, 412, 415, 423, 424, 427, 428, 439, 441, 464 (Continued)

(Continued)

F/O Electrical System Panel, P6-11

Row	Col	Number	Name
LOM 402			
B	7	C00229	WINDOW HEAT POWER L3, L4 & L5
LOM ALL			
B	8	C00393	WINDOW HEAT POWER RIGHT SIDE
B	9	C00228	WINDOW HEAT POWER LEFT FRONT

F/O Electrical System Panel, P6-12

Row	Col	Number	Name
LOM 404, 411, 412, 415, 423, 424, 427, 428, 439, 441, 464			
B	7	C01649	WINDOW HEAT POWER R3
LOM 402			
B	7	C00395	WINDOW HEAT POWER R3, R4 & R5
LOM ALL			
B	8	C00394	WINDOW HEAT POWER RIGHT FRONT
B	9	C00392	WINDOW HEAT POWER LEFT SIDE

These circuit breakers are inoperative and should remain open:

F/O Electrical System Panel, P6-11

Row	Col	Number	Name
LOM 402 POST SB 737-56-1017			
B	7	C00229	WINDOW HEAT POWER L4 & L5 (INOP)

F/O Electrical System Panel, P6-12

Row	Col	Number	Name
B	7	C00395	WINDOW HEAT POWER R4 & R5 (INOP)

LOM ALL

SUBTASK 30-42-31-860-002

(2) For the left windshield wiper, open this circuit breaker and install safety tag:

CAPT Electrical System Panel, P18-3

Row	Col	Number	Name
B	3	C00054	ANTI-ICE & RAIN WSHLD WIPER LEFT

SUBTASK 30-42-31-860-003

(3) For the right windshield wiper, open this circuit breaker and install safety tag:

CAPT Electrical System Panel, P18-3

Row	Col	Number	Name
B	1	C00055	ANTI-ICE & RAIN WSHLD WIPER RIGHT

D. Windshield Wiper Arm Removal

SUBTASK 30-42-31-010-001

(1) Use a stand to reach the windshield wipers.

ECCN 9E991 BOEING PROPRIETARY - See title page for details

SUBTASK 30-42-31-020-008

(2) Do this task: Windshield Wiper Blade Removal, TASK 30-42-11-020-801.

SUBTASK 30-42-31-800-001

CAUTION

DO NOT LIFT THE ARM ASSEMBLY MORE THAN NECESSARY TO LIFT THE ARM OFF THE WINDSHIELD. YOU CAN CAUSE DAMAGE TO THE ARM ASSEMBLY AND MAKE IT UNSERVICEABLE.

(3) Put a pad between the arm assembly [3] and the windshield to prevent damage to the windshield surface.

SUBTASK 30-42-31-020-001

(4) Loosen the adjustment screw [4] to remove the force on the wiper arm.

SUBTASK 30-42-31-020-002

(5) Remove the lockwire [6] from the bolt [7], arm assembly [3], and bolt [5].

SUBTASK 30-42-31-020-003

(6) Loosen the bolt [5].

SUBTASK 30-42-31-020-004

(7) Remove the bolt [7] and washer [8] from the shaft.

(a) Make sure to hold the arm assembly [3] in position.

NOTE: This will make sure that the wiper motor shaft does not turn.

(b) Remove the bolt [5].

SUBTASK 30-42-31-020-005

(8) Remove the arm assembly [3] from the wiper motor/converter shaft.

SUBTASK 30-42-31-020-006

(9) If it is necessary, remove the adjustment sleeve [10] from the wiper motor/converter shaft.

NOTE: The adjustment sleeve can stay with the wiper arm when it is removed.

END OF TASK

ECCN 9E991 BOEING PROPRIETARY - See title page for details

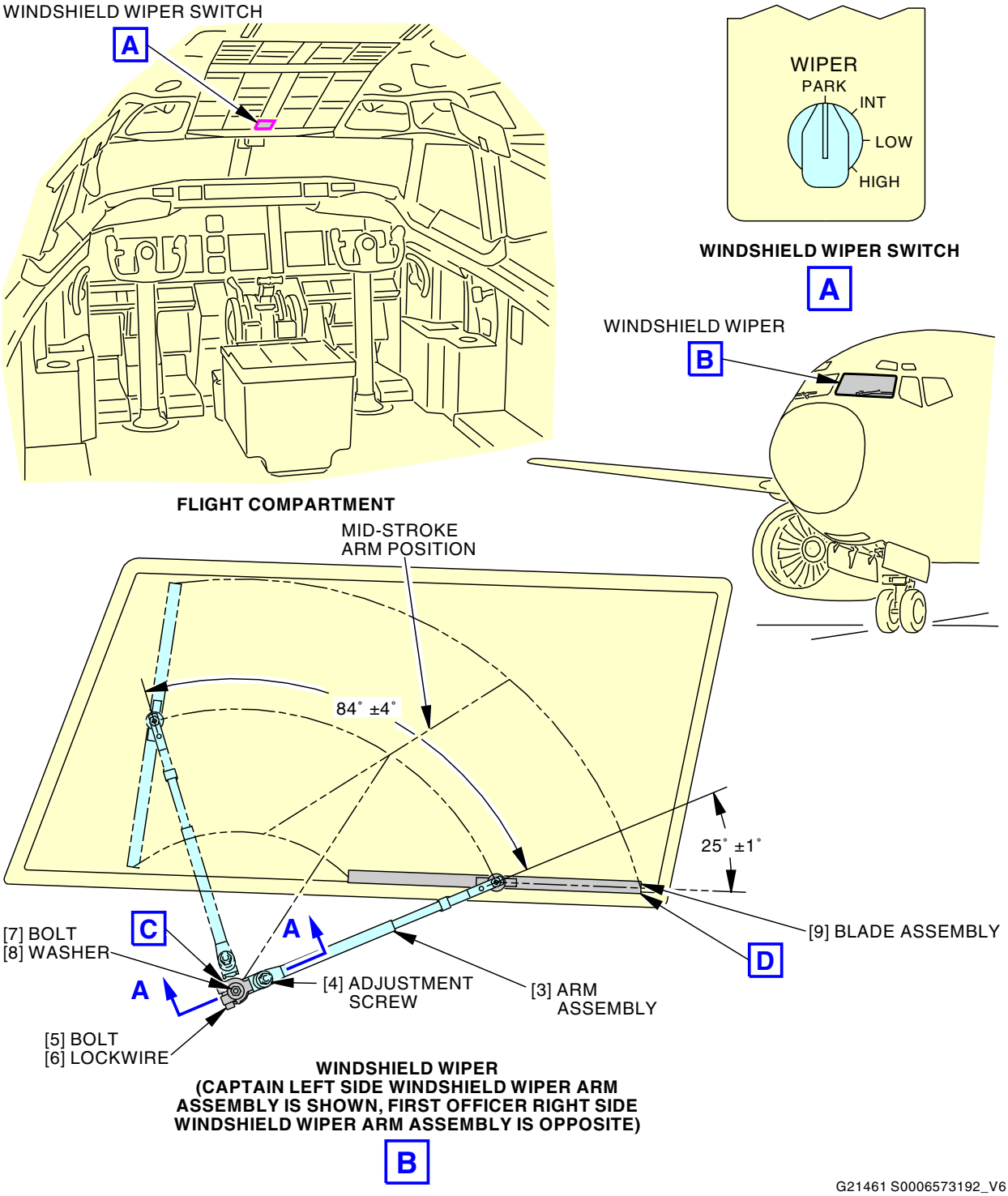

Windshield Wiper Arm Installation
Figure 201/30-42-31-990-801 (Sheet 1 of 3)

ECCN 9E991 BOEING PROPRIETARY - See title page for details

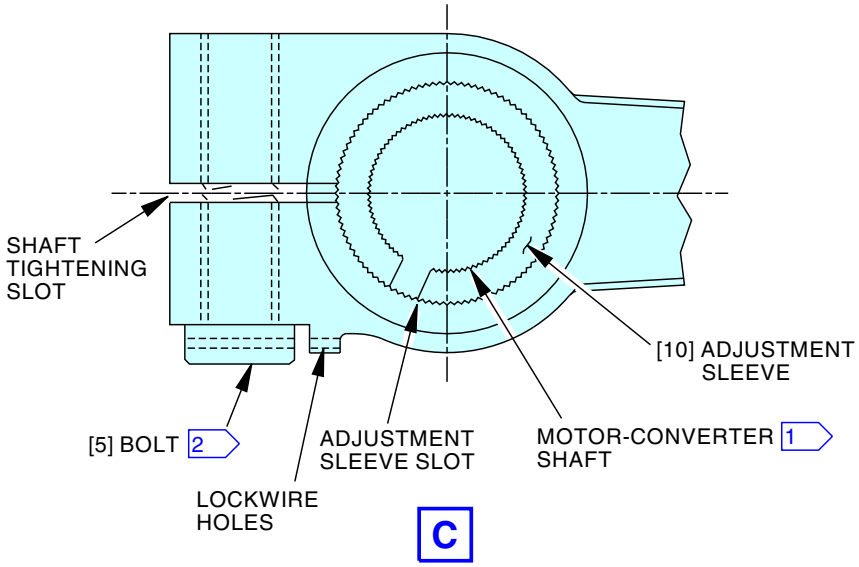

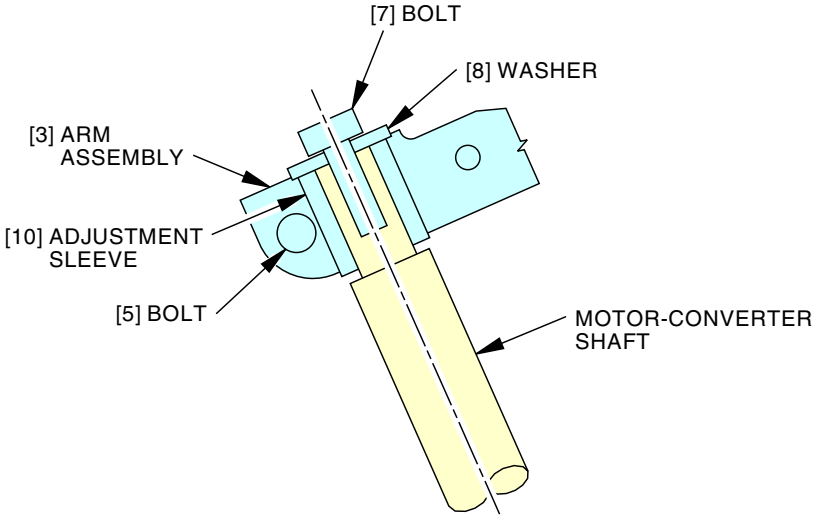

A-A

1 FOR FINE ADJUSTMENT OF THE ARM ASSEMBLY REMOVE THE ADJUSTMENT SLEEVE FROM THE ARM AND TURN SLEEVE IN THE SAME DIRECTION THAT THE ARM MUST BE MOVED. EACH NOTCH MOVES THE WIPER END ABOUT 0.03 INCH (0.76 mm).

2 MAKE SURE THAT THE INSTALLATION DIRECTION OF THE BOLT [5] IS CORRECT. THE HEAD OF THE BOLT [5] SHOULD BE ON THE SAME SIDE AS THE LOCKWIRE HOLE IN THE WIPER ARM. INSTALLATION OF THE BOLT [5] IN THE F/O SIDE WINDSHIELD WIPER IS EQUIVALENT.

G21473 S0006573193_V6

Windshield Wiper Arm Installation
Figure 201/30-42-31-990-801 (Sheet 2 of 3)

ECCN 9E991 BOEING PROPRIETARY - See title page for details

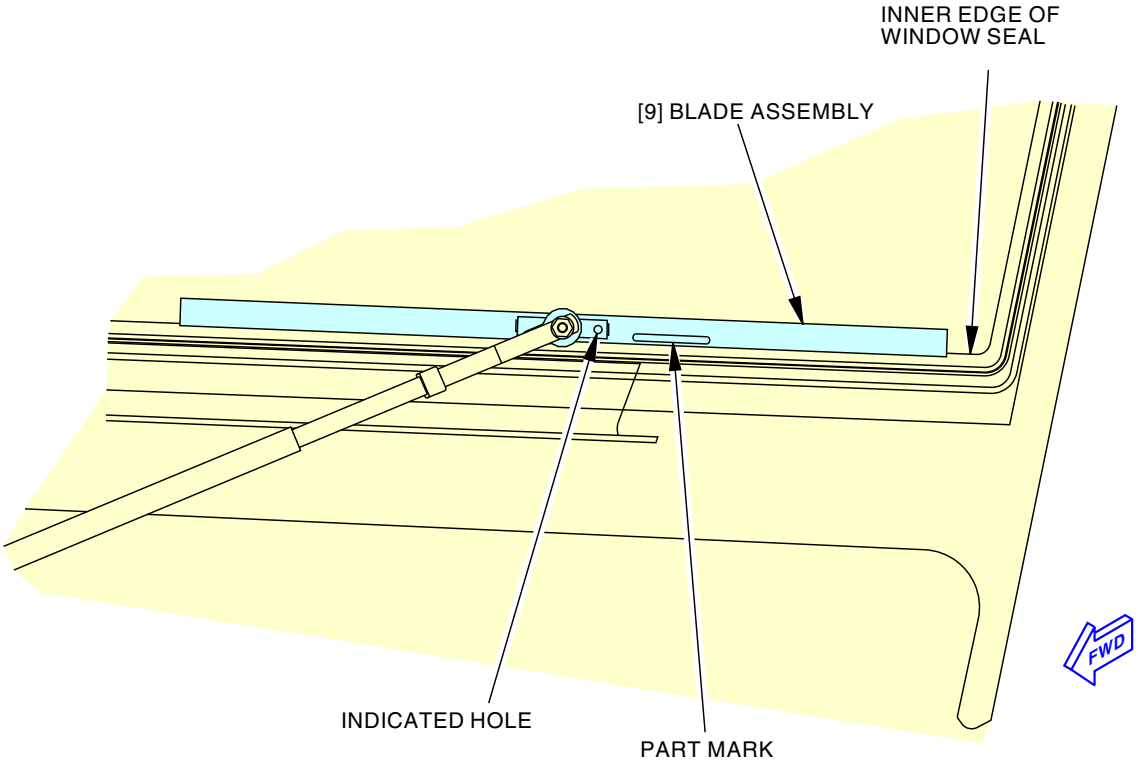

(EXAMPLE)

D

3024346 S0000794065_V1

Windshield Wiper Arm Installation
Figure 201/30-42-31-990-801 (Sheet 3 of 3)

ECCN 9E991 BOEING PROPRIETARY - See title page for details

TASK 30-42-31-400-801

3. Windshield Wiper Arm - Installation

(Figure 201)

A. References

Reference	Title
30-42-11-400-801	Windshield Wiper Blade Installation (P/B 401)

B. Tools/Equipment

NOTE: When more than one tool part number is listed under the same "Reference" number, the tools shown are alternates to each other within the same airplane series. Tool part numbers that are replaced or non-procurable are preceded by "Opt:", which stands for Optional.

Reference	Description
SPL-22466	Cable Assembly - Safety Part #: BACC13AT3K6 Supplier: 81205

C. Consumable Materials

Reference	Description	Specification
D00013	Grease - Aircraft And Instrument Grease	MIL-PRF-23827 (NATO G-354) (Supersedes MIL-G-23827)
G01048	Lockwire - MS20995C32, Corrosion Resistant Steel - 0.032 Inch (0.8128 mm) Diameter	NASM20995

D. Expendables/Parts

AMM Item	Description	AIPC Reference	AIPC Effectivity
3	Arm assembly	30-42-11-01-015	LOM ALL

E. Location Zones

Zone	Area
211	Flight Compartment - Left
212	Flight Compartment - Right

F. Prepare for the Installation

SUBTASK 30-42-31-860-004

> **WARNING** BEFORE YOU DO MAINTENANCE ON THE WINDSHIELD WIPER SYSTEM, OPEN THE WINDOW HEAT CIRCUIT-BREAKERS. IF YOU DO NOT OPEN THESE CIRCUIT BREAKERS YOU CAN GET AN ELECTRICAL SHOCK WHEN YOU TOUCH THE WINDOW.

(1) Make sure that these circuit breakers are open and have safety tags:

CAPT Electrical System Panel, P18-3

Row	Col	Number	Name
C	1	C00523	HEATERS CAPT PITOT
LOM 402, 404, 406, 407, 411, 412, 415, 416, 420, 422-434, 437-447, 450-464			
D	1	C00226	WINDOW HEAT CONTROL RIGHT FRONT AC
D	2	C00225	WINDOW HEAT CONTROL LEFT SIDE AC
LOM ALL			
D	5	C00525	HEATERS F/O PITOT
D	6	C00524	HEATERS AUX PITOT

ECCN 9E991 BOEING PROPRIETARY - See title page for details

(Continued)

CAPT Electrical System Panel, P18-3

Row	Col	Number	Name
LOM 402, 404, 406, 407, 411, 412, 415, 416, 420, 422-434, 437-447, 450-464			
E	1	C00224	WINDOW HEAT CONTROL LEFT FRONT AC
E	2	C00227	WINDOW HEAT CONTROL RIGHT SIDE AC

F/O Electrical System Panel, P6-11

Row	Col	Number	Name
LOM 404, 411, 412, 415, 423, 424, 427, 428, 439, 441, 464			
B	7	C01650	WINDOW HEAT POWER L3
LOM 402			
B	7	C00229	WINDOW HEAT POWER L3, L4 & L5
LOM ALL			
B	8	C00393	WINDOW HEAT POWER RIGHT SIDE
B	9	C00228	WINDOW HEAT POWER LEFT FRONT

F/O Electrical System Panel, P6-12

Row	Col	Number	Name
LOM 404, 411, 412, 415, 423, 424, 427, 428, 439, 441, 464			
B	7	C01649	WINDOW HEAT POWER R3
LOM 402			
B	7	C00395	WINDOW HEAT POWER R3, R4 & R5
LOM ALL			
B	8	C00394	WINDOW HEAT POWER RIGHT FRONT
B	9	C00392	WINDOW HEAT POWER LEFT SIDE

These circuit breakers are inoperative and should remain open:

F/O Electrical System Panel, P6-11

Row	Col	Number	Name
LOM 402 POST SB 737-56-1017			
B	7	C00229	WINDOW HEAT POWER L4 & L5 (INOP)

F/O Electrical System Panel, P6-12

Row	Col	Number	Name
B	7	C00395	WINDOW HEAT POWER R4 & R5 (INOP)

LOM ALL

SUBTASK 30-42-31-860-005

(2) Make sure that the wiper motor is in the park position.

(a) For the left windshield wiper, remove the safety tag and close this circuit breaker:

CAPT Electrical System Panel, P18-3

Row	Col	Number	Name
B	3	C00054	ANTI-ICE & RAIN WSHLD WIPER LEFT

ECCN 9E991 BOEING PROPRIETARY - See title page for details

(b) For the right windshield wiper, remove the safety tag and close this circuit breaker:

CAPT Electrical System Panel, P18-3

Row	Col	Number	Name
B	1	C00055	ANTI-ICE & RAIN WSHLD WIPER RIGHT

(c) Put the windshield wiper switch to the PARK position.

(d) For the left windshield wiper, open this circuit breaker and install safety tag:

CAPT Electrical System Panel, P18-3

Row	Col	Number	Name
B	3	C00054	ANTI-ICE & RAIN WSHLD WIPER LEFT

(e) For the right windshield wiper, open this circuit breaker and install safety tag:

CAPT Electrical System Panel, P18-3

Row	Col	Number	Name
B	1	C00055	ANTI-ICE & RAIN WSHLD WIPER RIGHT

G. Windshield Wiper Arm Installation

SUBTASK 30-42-31-020-009

(1) If necessary, loosen the adjustment screw [4].

SUBTASK 30-42-31-640-002

(2) Apply grease, D00013, to the serrations on the adjustment sleeve [10] and motor-converter shaft.

SUBTASK 30-42-31-420-007

(3) Install the arm assembly [3] on the motor-converter shaft.

(a) Place the arm assembly [3] on the motor-converter shaft in the parked position.

NOTE: To determine the position of the wiper arm assembly and for adjustment instructions refer to Figure 201.

1) For large adjustments, turn the arm assembly [3] and adjustment sleeve [10] together on the motor-converter shaft.

2) For small adjustments, turn the adjustment sleeve [10] within the arm assembly [3].

NOTE: For fine adjustments of the arm assembly, remove the adjustment sleeve from the arm and turn the sleeve in the same direction that the arm must be moved. Each notch moves the wiper end about 0.034 in. (0.864 mm).

(b) Apply 3.5 lb (1.6 kg) to 4.5 lb (2.0 kg) downward force at the blade attach point.

1) Make sure that the blade assembly [9] stays on the glass.

SUBTASK 30-42-31-420-008

(4) Install the bolt [5].

(a) Make sure that the head of the bolt [5] is on the same side as the lockwire hole in the wiper arm.

(b) Tighten the bolt [5] to hold the arm assembly [3] and adjustment sleeve [10] in their positions.

1) Make sure that the arm assembly [3] and the adjustment sleeve [10] are above the end of the motor-converter shaft.

SUBTASK 30-42-31-420-009

(5) Install the washer [8] and bolt [7] on the end of the motor-converter shaft.

ECCN 9E991 BOEING PROPRIETARY - See title page for details

SUBTASK 30-42-31-420-013

(6) Tighten the bolt [7] to 20 in-lb (2.3 N·m) – 25 in-lb (2.8 N·m).

SUBTASK 30-42-31-420-014

(7) Make sure that the adjustment sleeve [10] and arm assembly [3] touch the bolt [7] and washer [8] (View A-A, Figure 201).

(a) Make sure that there is no clearance.

SUBTASK 30-42-31-420-012

(8) Tighten the bolt [5] to 35 in-lb (4.0 N·m) – 40 in-lb (4.5 N·m).

SUBTASK 30-42-31-420-006

(9) Do this task: Windshield Wiper Blade Installation, TASK 30-42-11-400-801.

SUBTASK 30-42-31-820-011

(10) Do this task: Windshield Wiper Arm Force - Check/Adjustment, TASK 30-42-31-820-801.

SUBTASK 30-42-31-820-012

(11) Do this task: Windshield Wiper Arm Position - Check/Adjustment, TASK 30-42-31-820-802.

SUBTASK 30-42-31-420-011

(12) Install the lockwire [6] through the hole in the bolt [5], hole in the arm assembly [3], and hole in the bolt [7] to secure the bolt [5] and bolt [7].

(a) Use MS20995C32 lockwire, G01048 (preferred), or cable assembly, SPL-22466 (alternative), with a double twist method.

H. Put the Airplane Back to Its Usual Condition

SUBTASK 30-42-31-860-006

(1) Remove the safety tags and close these circuit breakers:

CAPT Electrical System Panel, P18-3

Row	Col	Number	Name
B	1	C00055	ANTI-ICE & RAIN WSHLD WIPER RIGHT
B	3	C00054	ANTI-ICE & RAIN WSHLD WIPER LEFT
C	1	C00523	HEATERS CAPT PITOT
LOM 402, 404, 406, 407, 411, 412, 415, 416, 420, 422-434, 437-447, 450-464			
D	1	C00226	WINDOW HEAT CONTROL RIGHT FRONT AC
D	2	C00225	WINDOW HEAT CONTROL LEFT SIDE AC
LOM ALL			
D	5	C00525	HEATERS F/O PITOT
D	6	C00524	HEATERS AUX PITOT
LOM 402, 404, 406, 407, 411, 412, 415, 416, 420, 422-434, 437-447, 450-464			
E	1	C00224	WINDOW HEAT CONTROL LEFT FRONT AC
E	2	C00227	WINDOW HEAT CONTROL RIGHT SIDE AC

F/O Electrical System Panel, P6-11

Row	Col	Number	Name
LOM 404, 411, 412, 415, 423, 424, 427, 428, 439, 441, 464			
B	7	C01650	WINDOW HEAT POWER L3
LOM 402			
B	7	C00229	WINDOW HEAT POWER L3, L4 & L5

ECCN 9E991 BOEING PROPRIETARY - See title page for details

LOM 402 (Continued)

(Continued)

F/O Electrical System Panel, P6-11

Row	Col	Number	Name
LOM ALL			
B	8	C00393	WINDOW HEAT POWER RIGHT SIDE
B	9	C00228	WINDOW HEAT POWER LEFT FRONT

F/O Electrical System Panel, P6-12

Row	Col	Number	Name
LOM 404, 411, 412, 415, 423, 424, 427, 428, 439, 441, 464			
B	7	C01649	WINDOW HEAT POWER R3
LOM 402			
B	7	C00395	WINDOW HEAT POWER R3, R4 & R5
LOM ALL			
B	8	C00394	WINDOW HEAT POWER RIGHT FRONT
B	9	C00392	WINDOW HEAT POWER LEFT SIDE

These circuit breakers are inoperative and should remain open:

F/O Electrical System Panel, P6-11

Row	Col	Number	Name
LOM 402 POST SB 737-56-1017			
B	7	C00229	WINDOW HEAT POWER L4 & L5 (INOP)

F/O Electrical System Panel, P6-12

Row	Col	Number	Name
B	7	C00395	WINDOW HEAT POWER R4 & R5 (INOP)

LOM ALL

END OF TASK

TASK 30-42-31-820-801

4. Windshield Wiper Arm Force - Check/Adjustment

(Figure 202)

A. General

(1) This task measures the force that the wiper arm applies to the windshield and adjusts the force for correct wiper operation.

B. References

Reference	Title
24-22-00-860-813	Supply External Power (P/B 201)

C. Tools/Equipment

Reference	Description
STD-759	Scale - Spring, 0 to 20 lbf (0 to 89 N)

ECCN 9E991 BOEING PROPRIETARY - See title page for details

D. Location Zones

Zone	Area
200	Upper Half of Fuselage
211	Flight Compartment - Left
212	Flight Compartment - Right

E. Windshield Wiper Arm Force Check/Adjustment

SUBTASK 30-42-31-860-007

> **WARNING** BEFORE YOU DO MAINTENANCE ON THE WINDSHIELD WIPER SYSTEM, OPEN THE WINDOW HEAT CIRCUIT-BREAKERS. IF YOU DO NOT OPEN THESE CIRCUIT BREAKERS YOU CAN GET AN ELECTRICAL SHOCK WHEN YOU TOUCH THE WINDOW.

(1) Open these circuit breakers and install safety tags:

CAPT Electrical System Panel, P18-3

Row	Col	Number	Name
C	1	C00523	HEATERS CAPT PITOT
LOM 402, 404, 406, 407, 411, 412, 415, 416, 420, 422-434, 437-447, 450-464			
D	1	C00226	WINDOW HEAT CONTROL RIGHT FRONT AC
D	2	C00225	WINDOW HEAT CONTROL LEFT SIDE AC
LOM ALL			
D	5	C00525	HEATERS F/O PITOT
D	6	C00524	HEATERS AUX PITOT
LOM 402, 404, 406, 407, 411, 412, 415, 416, 420, 422-434, 437-447, 450-464			
E	1	C00224	WINDOW HEAT CONTROL LEFT FRONT AC
E	2	C00227	WINDOW HEAT CONTROL RIGHT SIDE AC

F/O Electrical System Panel, P6-11

Row	Col	Number	Name
LOM 404, 411, 412, 415, 423, 424, 427, 428, 439, 441, 464			
B	7	C01650	WINDOW HEAT POWER L3
LOM 402			
B	7	C00229	WINDOW HEAT POWER L3, L4 & L5
LOM ALL			
B	8	C00393	WINDOW HEAT POWER RIGHT SIDE
B	9	C00228	WINDOW HEAT POWER LEFT FRONT

F/O Electrical System Panel, P6-12

Row	Col	Number	Name
LOM 404, 411, 412, 415, 423, 424, 427, 428, 439, 441, 464			
B	7	C01649	WINDOW HEAT POWER R3
LOM 402			
B	7	C00395	WINDOW HEAT POWER R3, R4 & R5
LOM ALL			
B	8	C00394	WINDOW HEAT POWER RIGHT FRONT
B	9	C00392	WINDOW HEAT POWER LEFT SIDE

ECCN 9E991 BOEING PROPRIETARY - See title page for details

These circuit breakers are inoperative and should remain open:

F/O Electrical System Panel, P6-11

Row	Col	Number	Name
LOM 402 POST SB 737-56-1017			
B	7	C00229	WINDOW HEAT POWER L4 & L5 (INOP)

F/O Electrical System Panel, P6-12

Row	Col	Number	Name
B	7	C00395	WINDOW HEAT POWER R4 & R5 (INOP)

LOM ALL

SUBTASK 30-42-31-800-002

(2) Do these steps to put the windshield wiper in the testing position:

(a) Do this task: Supply External Power, TASK 24-22-00-860-813.

> **CAUTION** DO NOT OPERATE THE WIPER ON A DRY OR DIRTY WINDSHIELD. ALWAYS SUPPLY WATER TO THE WINDSHIELD BEFORE YOU OPERATE THE WIPER. THE WIPER WILL CAUSE DAMAGE TO THE WINDSHIELD.

> **CAUTION** DO NOT USE WATER WITH A HIGH MINERAL CONTENT. IF YOU DO NOT OBEY, IT CAN CAUSE MARKS ON THE COATED GLASS SURFACE.

(b) Supply a continuous spray of clean water to the windshield.

NOTE: For windshields with a hydrophobic coating, deionized or distilled water is recommended during the wiper test.

1) If water with a high mineral content is used on a windshield with a hydrophobic coating, flush the windshield surface after the wiper test with deionized or distilled water, or remove the remaining water on the windshield with a cotton cloth.

(c) Turn the applicable wiper switch to the LOW position.

(d) Do this step for the applicable circuit breaker to stop the arm assembly [3] at the mid-stroke position on the windshield:

Open these circuit breakers and install safety tags:

CAPT Electrical System Panel, P18-3

Row	Col	Number	Name
B	1	C00055	ANTI-ICE & RAIN WSHLD WIPER RIGHT
B	3	C00054	ANTI-ICE & RAIN WSHLD WIPER LEFT

(e) Stop the water spray.

SUBTASK 30-42-31-700-001

(3) Do these steps to measure the force of the wiper arm:

(a) Connect the spring scale, STD-759, at the point where the blade assembly [9] attaches to the arm assembly [3].

(b) Hold the spring scale, STD-759, perpendicular to the windshield.

ECCN 9E991 BOEING PROPRIETARY - See title page for details

> **CAUTION** DO NOT LIFT THE WIPER ARM HIGHER THAN NECESSARY. DAMAGE TO THE WIPER ARM CAN OCCUR IF YOU LIFT IT TOO HIGH.

(c) Pull the spring scale, STD-759, slowly until the blade assembly [9] lifts off the windshield to measure the force.

NOTE: One end of the wiper blade may remain on the windshield during this test. A piece of paper should be able to slide under the blade without binding.

SUBTASK 30-42-31-820-006

(4) Adjust the force of the arm assembly [3].

NOTE: The wiper motor has a dimple at the end of the motor/converter shaft.

(a) If the force is less than 6.5 lbf (28.9 N), tighten the adjustment screw [4] to increase the force of the arm assembly [3].

(b) If the force is larger than 7.5 lbf (33.4 N), loosen the adjustment screw [4] to decrease the force of the arm assembly [3].

NOTE: The wiper motor is to be tensioned to the specified tension above, to be in compliance with AD 2003-20-13.

SUBTASK 30-42-31-700-002

(5) If the force of the arm assembly [3] was adjusted per the steps above, measure the force of the arm assembly [3] again and adjust as required.

SUBTASK 30-42-31-860-008

(6) Put the windshield wiper back to its usual position.

(a) Turn the applicable wiper switch to the PARK position.

> **CAUTION** DO NOT OPERATE THE WINDSHIELD WIPERS ON DRY GLASS. ALWAYS SUPPLY WATER TO THE WINDSHIELDS BEFORE YOU OPERATE THE WIPER. THE WIPER WILL CAUSE DAMAGE TO A DRY WINDSHIELD.

> **CAUTION** DO NOT USE WATER WITH A HIGH MINERAL CONTENT. IF YOU DO NOT OBEY, IT CAN CAUSE MARKS ON THE COATED GLASS SURFACE.

(b) Supply a continuous spray of clean water to the windshield.

NOTE: For windshields with a hydrophobic coating, deionized or distilled water is recommended during the wiper test.

1) If water with a high mineral content is used on a windshield with a hydrophobic coating, flush the windshield surface after the wiper test with deionized or distilled water, or remove the remaining water on the windshield with a cotton cloth.

(c) Remove the safety tags and close these circuit breakers:

CAPT Electrical System Panel, P18-3

Row	Col	Number	Name
B	1	C00055	ANTI-ICE & RAIN WSHLD WIPER RIGHT
B	3	C00054	ANTI-ICE & RAIN WSHLD WIPER LEFT

(d) Make sure that the blade assembly [9] stops in the parked position.

ECCN 9E991 BOEING PROPRIETARY - See title page for details

(e) Stop the water spray.

F. Put the Airplane Back to Its Usual Condition

SUBTASK 30-42-31-860-009

(1) Remove the safety tags and close these circuit breakers:

CAPT Electrical System Panel, P18-3

Row	Col	Number	Name
C	1	C00523	HEATERS CAPT PITOT
LOM 402, 404, 406, 407, 411, 412, 415, 416, 420, 422-434, 437-447, 450-464			
D	1	C00226	WINDOW HEAT CONTROL RIGHT FRONT AC
D	2	C00225	WINDOW HEAT CONTROL LEFT SIDE AC
LOM ALL			
D	5	C00525	HEATERS F/O PITOT
D	6	C00524	HEATERS AUX PITOT
LOM 402, 404, 406, 407, 411, 412, 415, 416, 420, 422-434, 437-447, 450-464			
E	1	C00224	WINDOW HEAT CONTROL LEFT FRONT AC
E	2	C00227	WINDOW HEAT CONTROL RIGHT SIDE AC

F/O Electrical System Panel, P6-11

Row	Col	Number	Name
LOM 404, 411, 412, 415, 423, 424, 427, 428, 439, 441, 464			
B	7	C01650	WINDOW HEAT POWER L3
LOM 402			
B	7	C00229	WINDOW HEAT POWER L3, L4 & L5
LOM ALL			
B	8	C00393	WINDOW HEAT POWER RIGHT SIDE
B	9	C00228	WINDOW HEAT POWER LEFT FRONT

F/O Electrical System Panel, P6-12

Row	Col	Number	Name
LOM 404, 411, 412, 415, 423, 424, 427, 428, 439, 441, 464			
B	7	C01649	WINDOW HEAT POWER R3
LOM 402			
B	7	C00395	WINDOW HEAT POWER R3, R4 & R5
LOM ALL			
B	8	C00394	WINDOW HEAT POWER RIGHT FRONT
B	9	C00392	WINDOW HEAT POWER LEFT SIDE

These circuit breakers are inoperative and should remain open:

F/O Electrical System Panel, P6-11

Row	Col	Number	Name
LOM 402 POST SB 737-56-1017			
B	7	C00229	WINDOW HEAT POWER L4 & L5 (INOP)

F/O Electrical System Panel, P6-12

Row	Col	Number	Name
B	7	C00395	WINDOW HEAT POWER R4 & R5 (INOP)

ECCN 9E991 BOEING PROPRIETARY - See title page for details

LOM ALL

END OF TASK

ECCN 9E991 BOEING PROPRIETARY - See title page for details

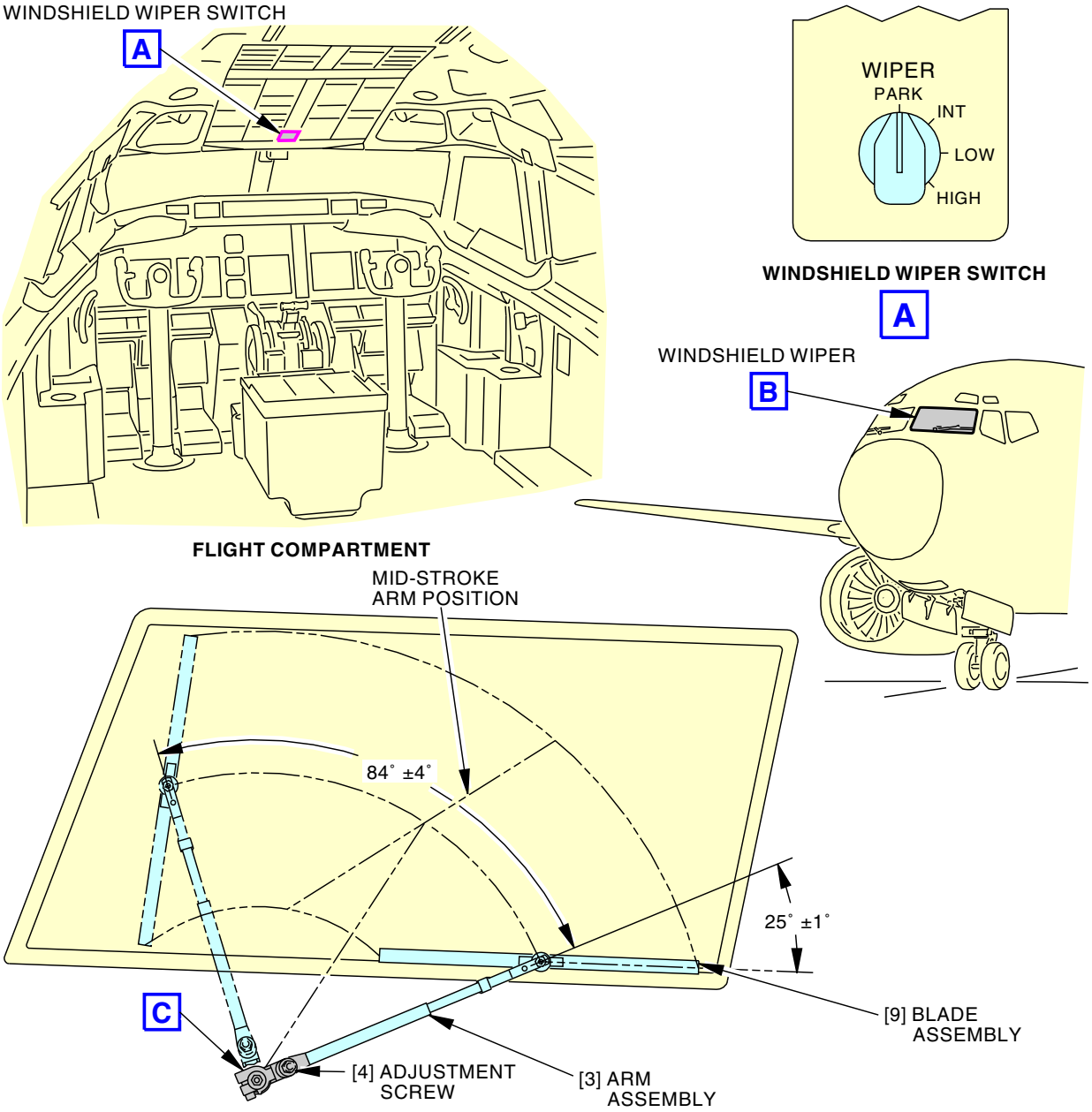

WINDSHIELD WIPER
(CAPTAIN LEFT SIDE WINDSHIELD WIPER ARM ASSEMBLY IS SHOWN, FIRST OFFICER RIGHT SIDE WINDSHIELD WIPER ARM ASSEMBLY IS OPPOSITE)

B

3024347 S0000796095_V1

Windshield Wiper Arm Sweep Pattern
Figure 202/30-42-31-990-802 (Sheet 1 of 2)

ECCN 9E991 BOEING PROPRIETARY - See title page for details

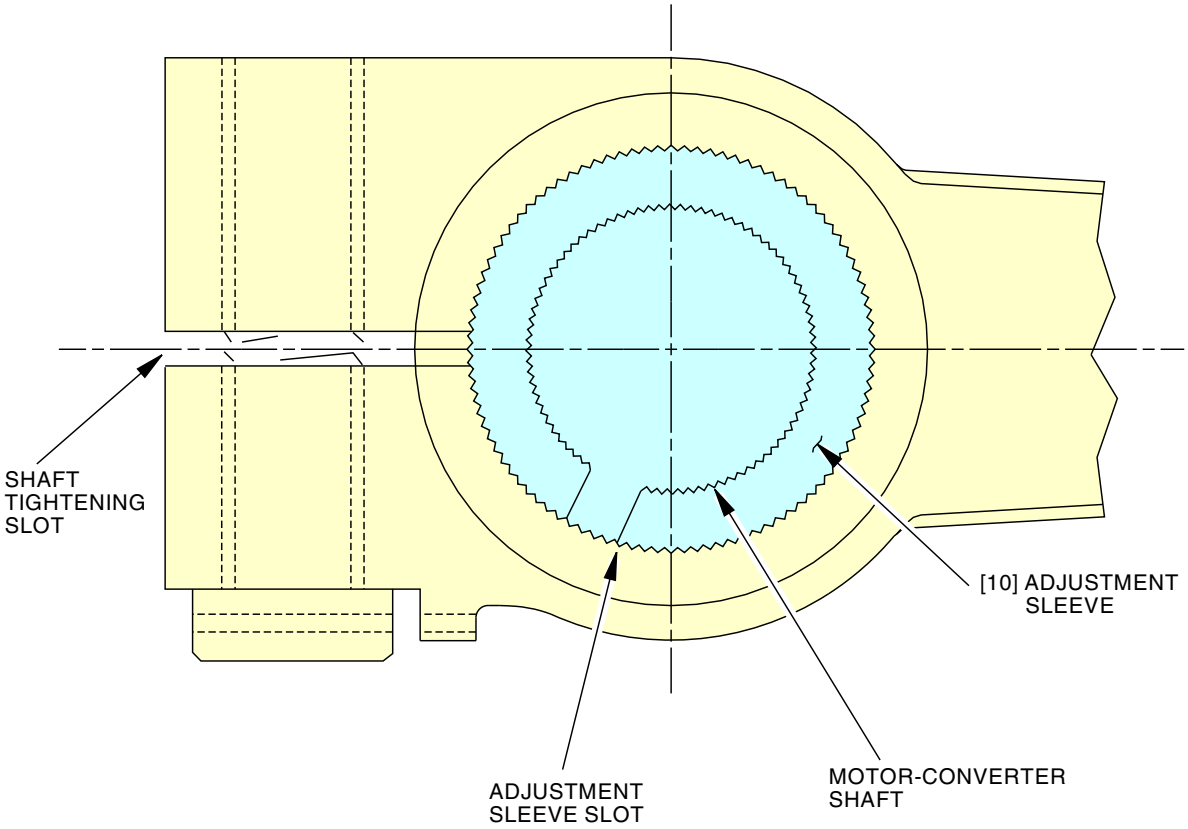

C

3024348 S0000796096_V1

Windshield Wiper Arm Sweep Pattern
Figure 202/30-42-31-990-802 (Sheet 2 of 2)

ECCN 9E991 BOEING PROPRIETARY - See title page for details

TASK 30-42-31-820-802

5. Windshield Wiper Arm Position - Check/Adjustment

(Figure 202)

A. General

(1) This task adjusts the position of the wiper arm sweep on the windshield

(2) This task must be completed after an installation of a wiper arm.

B. References

Reference	Title
24-22-00-860-813	Supply External Power (P/B 201)

C. Location Zones

Zone	Area
211	Flight Compartment - Left
212	Flight Compartment - Right

D. Windshield Wiper Arm Position Check/Adjustment

SUBTASK 30-42-31-860-010

(1) Do this task: Supply External Power, TASK 24-22-00-860-813.

SUBTASK 30-42-31-860-011

WARNING BEFORE YOU DO MAINTENANCE ON THE WINDSHIELD WIPER SYSTEM, OPEN THE WINDOW HEAT CIRCUIT-BREAKERS. IF YOU DO NOT OPEN THESE CIRCUIT BREAKERS YOU CAN GET AN ELECTRICAL SHOCK WHEN YOU TOUCH THE WINDOW.

(2) Open these circuit breakers and install safety tags:

CAPT Electrical System Panel, P18-3

Row	Col	Number	Name
C	1	C00523	HEATERS CAPT PITOT
LOM 402, 404, 406, 407, 411, 412, 415, 416, 420, 422-434, 437-447, 450-464			
D	1	C00226	WINDOW HEAT CONTROL RIGHT FRONT AC
D	2	C00225	WINDOW HEAT CONTROL LEFT SIDE AC
LOM ALL			
D	5	C00525	HEATERS F/O PITOT
D	6	C00524	HEATERS AUX PITOT
LOM 402, 404, 406, 407, 411, 412, 415, 416, 420, 422-434, 437-447, 450-464			
E	1	C00224	WINDOW HEAT CONTROL LEFT FRONT AC
E	2	C00227	WINDOW HEAT CONTROL RIGHT SIDE AC

F/O Electrical System Panel, P6-11

Row	Col	Number	Name
LOM 404, 411, 412, 415, 423, 424, 427, 428, 439, 441, 464			
B	7	C01650	WINDOW HEAT POWER L3
LOM 402			
B	7	C00229	WINDOW HEAT POWER L3, L4 & L5
LOM ALL			
B	8	C00393	WINDOW HEAT POWER RIGHT SIDE

ECCN 9E991 BOEING PROPRIETARY - See title page for details

(Continued)

F/O Electrical System Panel, P6-11

Row	Col	Number	Name
B	9	C00228	WINDOW HEAT POWER LEFT FRONT

F/O Electrical System Panel, P6-12

Row	Col	Number	Name
LOM 404, 411, 412, 415, 423, 424, 427, 428, 439, 441, 464			
B	7	C01649	WINDOW HEAT POWER R3
LOM 402			
B	7	C00395	WINDOW HEAT POWER R3, R4 & R5
LOM ALL			
B	8	C00394	WINDOW HEAT POWER RIGHT FRONT
B	9	C00392	WINDOW HEAT POWER LEFT SIDE

These circuit breakers are inoperative and should remain open:

F/O Electrical System Panel, P6-11

Row	Col	Number	Name
LOM 402 POST SB 737-56-1017			
B	7	C00229	WINDOW HEAT POWER L4 & L5 (INOP)

F/O Electrical System Panel, P6-12

Row	Col	Number	Name
B	7	C00395	WINDOW HEAT POWER R4 & R5 (INOP)

LOM ALL

SUBTASK 30-42-31-210-001

(3) Do these steps to examine the sweep pattern of the arm assembly [3]:

> **CAUTION** DO NOT OPERATE THE WINDSHIELD WIPERS ON DRY GLASS. ALWAYS SUPPLY WATER TO THE WINDSHIELDS BEFORE YOU OPERATE THE WIPER. THE WIPER WILL CAUSE DAMAGE TO A DRY WINDSHIELD.

(a) Supply a continuous spray of clean water to the windshield.

NOTE: For windshields with a hydrophobic coating, deionized or distilled water is recommended during the wiper test. Water with a high mineral content can cause marks on the coated glass surface that are difficult to remove. If water with a high mineral content is used on a windshield with a hydrophobic coating, flush the windshield surface after the wiper test with deionized or distilled water, or remove the remaining water on the windshield with a cotton cloth.

(b) Turn the wiper switch to the LOW position and let the wiper operate for one or two cycles.

(c) Turn the wiper switch to the PARK position.

(d) Stop the water spray.

(e) Make sure that the arm assembly [3] goes back to the parked position with the blade assembly [9] near the bottom edge of the windshield.

(f) Make sure that the blade assembly [9] is parallel to the bottom edge of the windshield.

(g) Compare the sweep pattern to Figure 202.

ECCN 9E991 BOEING PROPRIETARY - See title page for details

SUBTASK 30-42-31-820-005

(4) If you find a problem with the sweep pattern of the arm assembly [3], do these steps to adjust the sweep pattern:

(a) Measure the distance that the tip of the blade assembly [9] needs to move.

(b) Make a mark on the adjustment sleeve and wiper motor shaft to show the current installation.

(c) Remove the windshield arm assembly [3] (TASK 30-42-31-000-801).

(d) Re-install the windshield arm assembly [3] (TASK 30-42-31-400-801).

NOTE: The arm assembly installation procedure has details on how to adjust the arm assembly.

SUBTASK 30-42-31-860-012

(5) Put the wiper to its parked position.

CAUTION	DO NOT OPERATE THE WINDSHIELD WIPERS ON DRY GLASS. ALWAYS SUPPLY WATER TO THE WINDSHIELDS BEFORE YOU OPERATE THE WIPER. THE WIPER WILL CAUSE DAMAGE TO A DRY WINDSHIELD.

(a) Supply a continuous spray of clean water to the windshield.

NOTE: For windshields with a hydrophobic coating, deionized or distilled water is recommended during the wiper test. Water with a high mineral content can cause marks on the coated glass surface that are difficult to remove. If water with a high mineral content is used on a windshield with a hydrophobic coating, flush the windshield surface after the wiper test with deionized or distilled water, or remove the remaining water on the windshield with a cotton cloth.

(b) Set the wiper switch to the LOW position.

(c) Set the wiper switch to the PARK position.

(d) Stop the water spray.

E. Put the Airplane Back to Its Usual Condition

SUBTASK 30-42-31-860-013

(1) Remove the safety tags and close these circuit breakers:

CAPT Electrical System Panel, P18-3

Row	Col	Number	Name
C	1	C00523	HEATERS CAPT PITOT
LOM 402, 404, 406, 407, 411, 412, 415, 416, 420, 422-434, 437-447, 450-464			
D	1	C00226	WINDOW HEAT CONTROL RIGHT FRONT AC
D	2	C00225	WINDOW HEAT CONTROL LEFT SIDE AC
LOM ALL			
D	5	C00525	HEATERS F/O PITOT
D	6	C00524	HEATERS AUX PITOT
LOM 402, 404, 406, 407, 411, 412, 415, 416, 420, 422-434, 437-447, 450-464			
E	1	C00224	WINDOW HEAT CONTROL LEFT FRONT AC
E	2	C00227	WINDOW HEAT CONTROL RIGHT SIDE AC

ECCN 9E991 BOEING PROPRIETARY - See title page for details

F/O Electrical System Panel, P6-11

Row	Col	Number	Name
LOM 404, 411, 412, 415, 423, 424, 427, 428, 439, 441, 464			
B	7	C01650	WINDOW HEAT POWER L3
LOM 402			
B	7	C00229	WINDOW HEAT POWER L3, L4 & L5
LOM ALL			
B	8	C00393	WINDOW HEAT POWER RIGHT SIDE
B	9	C00228	WINDOW HEAT POWER LEFT FRONT

F/O Electrical System Panel, P6-12

Row	Col	Number	Name
LOM 404, 411, 412, 415, 423, 424, 427, 428, 439, 441, 464			
B	7	C01649	WINDOW HEAT POWER R3
LOM 402			
B	7	C00395	WINDOW HEAT POWER R3, R4 & R5
LOM ALL			
B	8	C00394	WINDOW HEAT POWER RIGHT FRONT
B	9	C00392	WINDOW HEAT POWER LEFT SIDE

These circuit breakers are inoperative and should remain open:

F/O Electrical System Panel, P6-11

Row	Col	Number	Name
LOM 402 POST SB 737-56-1017			
B	7	C00229	WINDOW HEAT POWER L4 & L5 (INOP)

F/O Electrical System Panel, P6-12

Row	Col	Number	Name
B	7	C00395	WINDOW HEAT POWER R4 & R5 (INOP)

——— END OF TASK ———

ECCN 9E991 BOEING PROPRIETARY - See title page for details

WINDSHIELD HYDROPHOBIC COATING - MAINTENANCE PRACTICES

1. General

A. This procedure contains the following task:

(1) Hydrophobic Coating Maintenance Practices.

TASK 30-43-00-800-801

2. Hydrophobic Coating - Maintenance Practices

A. General

(1) The maintenance procedures for the hydrophobic coating are contained in the Master Kit listed below.

(2) The windshield wipers are the certified rain removal system. The hydrophobic coating is an enhancement and is not required for dispatch. However, Boeing recommends that the coating be maintained.

B. Tools/Equipment

NOTE: When more than one tool part number is listed under the same "Reference" number, the tools shown are alternates to each other within the same airplane series. Tool part numbers that are replaced or non-procurable are preceded by "Opt:", which stands for Optional.

Reference	Description
COM-1806	Master Kit - Hydrophobic Coating Part #: 7759-V Supplier: U1610 Part #: DSS4020 Supplier: 53117 Part #: DSS4020X Supplier: 53117 Part #: DSS4040 Supplier: 53117 Opt Part #: 7137-V Supplier: U1610 Opt Part #: DSS1020 Supplier: 53117 Opt Part #: DSS1020X Supplier: 53117 Opt Part #: DSS1040 Supplier: 53117
COM-21726	Single Kit - Hydrophobic Coating Part #: DSS4100 Supplier: 53117 Part #: DSS4100X Supplier: 53117 Opt Part #: DSS0100 Supplier: 53117

C. Prepare for the Maintenance Practices

SUBTASK 30-43-00-860-001

> **WARNING**
> BEFORE PERFORMING MAINTENANCE ON THE WINDSHIELD, OPEN THE WINDOW HEAT CIRCUIT BREAKERS. IF THESE CIRCUIT BREAKERS ARE NOT OPEN DURING MAINTENANCE, YOU CAN GET AN ELECTRICAL SHOCK WHEN YOU TOUCH THE WINDOW. THE SHOCK CAN CAUSE INJURY TO PERSONS.

(1) Open these circuit breakers and install safety tags:

CAPT Electrical System Panel, P18-3

Row	Col	Number	Name
LOM 402, 404, 406, 407, 411, 412, 415, 416, 420, 422-434, 437-447, 450-464			
D	1	C00226	WINDOW HEAT CONTROL RIGHT FRONT AC
D	2	C00225	WINDOW HEAT CONTROL LEFT SIDE AC
E	1	C00224	WINDOW HEAT CONTROL LEFT FRONT AC

ECCN 9E991 BOEING PROPRIETARY - See title page for details

LOM 402, 404, 406, 407, 411, 412, 415, 416, 420, 422-434, 437-447, 450-464 (Continued)

(Continued)

CAPT Electrical System Panel, P18-3

Row	Col	Number	Name
E	2	C00227	WINDOW HEAT CONTROL RIGHT SIDE AC

F/O Electrical System Panel, P6-11

Row	Col	Number	Name
LOM 404, 411, 412, 415, 423, 424, 427, 428, 439, 441, 464			
B	7	C01650	WINDOW HEAT POWER L3
LOM 402			
B	7	C00229	WINDOW HEAT POWER L3, L4 & L5
LOM ALL			
B	8	C00393	WINDOW HEAT POWER RIGHT SIDE
B	9	C00228	WINDOW HEAT POWER LEFT FRONT

F/O Electrical System Panel, P6-12

Row	Col	Number	Name
LOM 404, 411, 412, 415, 423, 424, 427, 428, 439, 441, 464			
B	7	C01649	WINDOW HEAT POWER R3
LOM 402			
B	7	C00395	WINDOW HEAT POWER R3, R4 & R5
LOM ALL			
B	8	C00394	WINDOW HEAT POWER RIGHT FRONT
B	9	C00392	WINDOW HEAT POWER LEFT SIDE

These circuit breakers are inoperative and should remain open:

F/O Electrical System Panel, P6-11

Row	Col	Number	Name
LOM 402 POST SB 737-56-1017			
B	7	C00229	WINDOW HEAT POWER L4 & L5 (INOP)

F/O Electrical System Panel, P6-12

Row	Col	Number	Name
B	7	C00395	WINDOW HEAT POWER R4 & R5 (INOP)

LOM ALL

SUBTASK 30-43-00-010-001

(2) Use a stand to get access to the windshield.

D. Hydrophobic Coating Maintenance Practices

SUBTASK 30-43-00-800-001

(1) Use the procedure in the hydrophobic coating master kit, COM-1806, or hydrophobic coating single kit, COM-21726, to do these maintenance tasks:

(a) Clean the existing hydrophobic coating.

(b) Assess the efficiency of the hydrophobic coating.

ECCN 9E991 BOEING PROPRIETARY - See title page for details

(c) Re-apply the hydrophobic coating if the efficiency of the existing coating is not acceptable.

E. Put the Airplane Back to Its Usual Condition

SUBTASK 30-43-00-860-002

(1) Remove the safety tags and close these circuit breakers:

CAPT Electrical System Panel, P18-3

Row	Col	Number	Name
LOM 402, 404, 406, 407, 411, 412, 415, 416, 420, 422-434, 437-447, 450-464			
D	1	C00226	WINDOW HEAT CONTROL RIGHT FRONT AC
D	2	C00225	WINDOW HEAT CONTROL LEFT SIDE AC
E	1	C00224	WINDOW HEAT CONTROL LEFT FRONT AC
E	2	C00227	WINDOW HEAT CONTROL RIGHT SIDE AC

F/O Electrical System Panel, P6-11

Row	Col	Number	Name
LOM 404, 411, 412, 415, 423, 424, 427, 428, 439, 441, 464			
B	7	C01650	WINDOW HEAT POWER L3
LOM 402			
B	7	C00229	WINDOW HEAT POWER L3, L4 & L5
LOM ALL			
B	8	C00393	WINDOW HEAT POWER RIGHT SIDE
B	9	C00228	WINDOW HEAT POWER LEFT FRONT

F/O Electrical System Panel, P6-12

Row	Col	Number	Name
LOM 404, 411, 412, 415, 423, 424, 427, 428, 439, 441, 464			
B	7	C01649	WINDOW HEAT POWER R3
LOM 402			
B	7	C00395	WINDOW HEAT POWER R3, R4 & R5
LOM ALL			
B	8	C00394	WINDOW HEAT POWER RIGHT FRONT
B	9	C00392	WINDOW HEAT POWER LEFT SIDE

These circuit breakers are inoperative and should remain open:

F/O Electrical System Panel, P6-11

Row	Col	Number	Name
LOM 402 POST SB 737-56-1017			
B	7	C00229	WINDOW HEAT POWER L4 & L5 (INOP)

F/O Electrical System Panel, P6-12

Row	Col	Number	Name
B	7	C00395	WINDOW HEAT POWER R4 & R5 (INOP)

END OF TASK

ECCN 9E991 BOEING PROPRIETARY - See title page for details

WATER AND DRAIN ANTI-ICING SYSTEM - MAINTENANCE PRACTICES

1. General

A. This procedure has these tasks:

(1) Anti-ice operation for the drain mast with 115 Volts AC on the Ground.

(2) Drain heaters - deactivation.

(3) Drain heaters - activation.

TASK 30-71-00-800-801

2. Water and Drain Operation with 115 Volts on the Ground

A. General

(1) 28 volts AC is normally used to provide protection from icing for the water and drain system while the airplane is on the ground. 115 volt AC is used while the airplane is in the air.

(2) This task should only be used when the 28 volt operation will not remove ice from the drain masts.

(3) Refer to Cold Weather Maintenance Procedure, TASK 12-33-01-600-802.

B. References

Reference	Title
12-33-01-600-802	Cold Weather Maintenance Procedure (P/B 301)
32-09-00-840-801	Prepare to Put the Airplane in the Air Mode (P/B 201)
32-09-00-860-801	Put the Airplane in the Air Mode (P/B 201)
32-09-00-860-802	Return the Airplane to the Ground Mode (P/B 201)

C. Location Zones

Zone	Area
100	Lower Half of Fuselage
211	Flight Compartment - Left
212	Flight Compartment - Right

D. Procedure

SUBTASK 30-71-00-020-001

WARNING OBEY THE PROCEDURE THAT PREPARES TO PUT THE AIRPLANE IN THE AIR MODE. IN THE AIR MODE, MANY OF THE AIRPLANE SYSTEMS CAN OPERATE. THIS CAN CAUSE INJURIES TO PERSONS AND DAMAGE TO EQUIPMENT CAN OCCUR.

(1) Do this task: Prepare to Put the Airplane in the Air Mode, TASK 32-09-00-840-801.

SUBTASK 30-71-00-020-002

(2) Do this task: Put the Airplane in the Air Mode, TASK 32-09-00-860-801.

SUBTASK 30-71-00-020-003

(3) Make sure that this circuit breaker is closed:

CAPT Electrical System Panel, P18-3

Row	Col	Number	Name
E	4	C00700	HEATERS DRAIN MAST AIR

NOTE: This circuit breaker is opened in the Prepare for Air Mode Simulation task. It must be closed for the operation of the drain mast in the air (high heat) mode.

ECCN 9E991 BOEING PROPRIETARY - See title page for details

E. Put the Airplane back to Normal

NOTE: Do this procedure when 115 Volt operation of the anti-ice system is no longer needed.

SUBTASK 30-71-00-840-001

(1) Do this task: Return the Airplane to the Ground Mode, TASK 32-09-00-860-802.

END OF TASK

TASK 30-71-00-040-801

3. Drain Heaters - Deactivation

A. General

(1) This task will deactivate the power to the drain heaters.

B. References

Reference	Title
25-27-15-000-801	Carpet Removal (P/B 401)
25-27-15-400-801	Carpet - Installation (P/B 401)
25-27-21-000-801	Entry and Service Area Floor Covering - Removal (P/B 401)
25-27-21-400-801	Entry and Service Area Floor Covering - Installation (P/B 401)
25-52-06-000-801	Cargo Compartment Sidewall Lining - Removal (P/B 401)
25-52-06-400-801	Cargo Compartment Sidewall Lining - Installation (P/B 401)
25-52-10-000-801	Cargo Floor Panel - Removal (P/B 401)
25-52-10-400-801	Cargo Floor Panel - Installation (P/B 401)
25-52-17-000-801	Forward Cargo Compartment Aft Bulkhead Liner - Removal (P/B 401)
25-52-17-400-801	Forward Cargo Compartment Aft Bulkhead Liner - Installation (P/B 401)
25-52-19-000-801	Aft Cargo Compartment Aft Bulkhead Liner - Removal (P/B 401)
25-52-19-400-801	Aft Cargo Compartment Aft Bulkhead Liner - Installation (P/B 401)
25-52-20-000-801	Waste Tank Enclosure Panel - Removal (P/B 401)
25-52-20-400-801	Waste Tank Enclosure Panel - Installation (P/B 401)
30-71-00-990-801	Figure: Drain and Water Supply Line Heater Access (P/B 501)
38-31-01-000-801	Forward Drain Mast Removal (P/B 401)
SSM 30-71-11	System Schematics Manual

C. Tools/Equipment

NOTE: When more than one tool part number is listed under the same "Reference" number, the tools shown are alternates to each other within the same airplane series. Tool part numbers that are replaced or non-procurable are preceded by "Opt:", which stands for Optional.

Reference	Description
COM-1572	Thermometer - Infrared, Intrinsically Safe Part #: 568 EX Supplier: 89536 Part #: 568 EX/BR Supplier: 89536 Part #: 568 EX/CN Supplier: 89536 Part #: 568 EX/ETL Supplier: 89536 Opt Part #: DHS24XC-FM Supplier: 08086 Opt Part #: DHS24XF-FM Supplier: 08086 Opt Part #: EX-MP4 A Supplier: 3GT36 Opt Part #: IR-16L3 IS Supplier: 75037

ECCN 9E991 BOEING PROPRIETARY - See title page for details

(Continued)

Reference	Description
COM-2531	Clamp-On- Current Meter Part #: 324 Supplier: 89536 Part #: 374 FC Supplier: 89536 Part #: LH41A Supplier: 0JV05 Opt Part #: 321 Supplier: 89536 Opt Part #: 322 Supplier: 89536 Opt Part #: 374 Supplier: 89536 Opt Part #: MODEL 33 Supplier: 89536 Opt Part #: MODEL 36 Supplier: 89536

D. Location Zones

Zone	Area
143	Area Below Aft Cargo Compartment - Left
144	Area Below Aft Cargo Compartment - Right

E. Procedure

SUBTASK 30-71-00-020-005

WARNING BE CAREFUL WHEN YOU DO WORK AROUND ENERGIZED PANELS. HIGH VOLTAGES CAN KILL YOU.

(1) Open these circuit breakers and install safety tags:

CAPT Electrical System Panel, P18-3

Row	Col	Number	Name
D	18	C01463	WASTE/WTR LINE HEATERS
E	3	C00234	HEATERS DRAIN MAST GND
E	4	C00700	HEATERS DRAIN MAST AIR
E	5	C00233	HEATERS DRAIN
E	18	C01473	HOSE HEATERS

F. Drain Heaters - Tryout

NOTE: This tryout is to make sure that the power to the drain heaters is in a zero energy state.

SUBTASK 30-71-00-020-006

(1) Get access to the heater and controlling thermostat (if applicable).

(a) Use the schematic (SSM 30-71-11) to find the location of the heater and thermostat.

(b) Use Figure 30-71-00-990-801 to identify access requirements.

(c) Do the necessary tasks to get access to the heater and thermostat.

1) Do this task: Cargo Floor Panel - Removal, TASK 25-52-10-000-801.

2) Do this task: Forward Cargo Compartment Aft Bulkhead Liner - Removal, TASK 25-52-17-000-801.

3) Do this task: Aft Cargo Compartment Aft Bulkhead Liner - Removal, TASK 25-52-19-000-801.

4) Do this task: Cargo Compartment Sidewall Lining - Removal, TASK 25-52-06-000-801.

5) Do this task: Waste Tank Enclosure Panel - Removal, TASK 25-52-20-000-801.

ECCN 9E991 BOEING PROPRIETARY - See title page for details

6) Do this task: Carpet Removal, TASK 25-27-15-000-801.

7) Do this task: Entry and Service Area Floor Covering - Removal, TASK 25-27-21-000-801.

SUBTASK 30-71-00-210-012

WARNING DO NOT TOUCH THE DRAIN MASTS UNTIL THEY BECOME COOL. DRAIN MASTS BECOME VERY HOT. INJURIES TO PERSONNEL CAN OCCUR.

(2) Make sure that the applicable drain heater does not become warm.

(a) You can use an Infrared Thermometer, COM-1572, or other temperature measuring device, to make sure that the temperature is less than 10 degrees F (6 degrees C) warmer than the ambient air temperature.

(b) As an alternative, you can use a clamp-on current meter, COM-2531, or equivalent, to measure the current to the drain heater.

1) Make sure that there is no current to the drain heater.

2) Refer to this task: Forward Drain Mast Removal, TASK 38-31-01-000-801, for details to get access to the heater wiring.

G. Put the Airplane Back to Its Usual Condition

SUBTASK 30-71-00-420-002

(1) Install the interior furnishings as necessary.

SUBTASK 30-71-00-420-003

(2) Do this task: Entry and Service Area Floor Covering - Installation, TASK 25-27-21-400-801.

SUBTASK 30-71-00-420-004

(3) Do this task: Carpet - Installation, TASK 25-27-15-400-801.

SUBTASK 30-71-00-420-005

(4) Do this task: Waste Tank Enclosure Panel - Installation, TASK 25-52-20-400-801.

SUBTASK 30-71-00-420-006

(5) Do this task: Cargo Compartment Sidewall Lining - Installation, TASK 25-52-06-400-801.

SUBTASK 30-71-00-420-007

(6) Do this task: Aft Cargo Compartment Aft Bulkhead Liner - Installation, TASK 25-52-19-400-801.

SUBTASK 30-71-00-420-009

(7) Do this task: Forward Cargo Compartment Aft Bulkhead Liner - Installation, TASK 25-52-17-400-801.

SUBTASK 30-71-00-420-010

(8) Do this task: Cargo Floor Panel - Installation, TASK 25-52-10-400-801.

END OF TASK

ECCN 9E991 BOEING PROPRIETARY - See title page for details

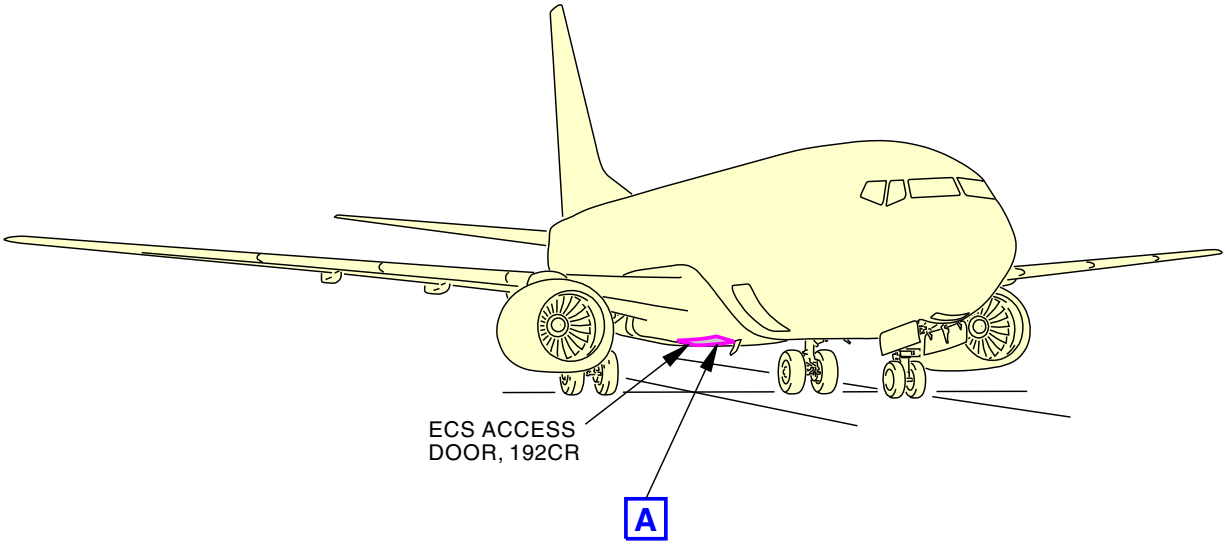

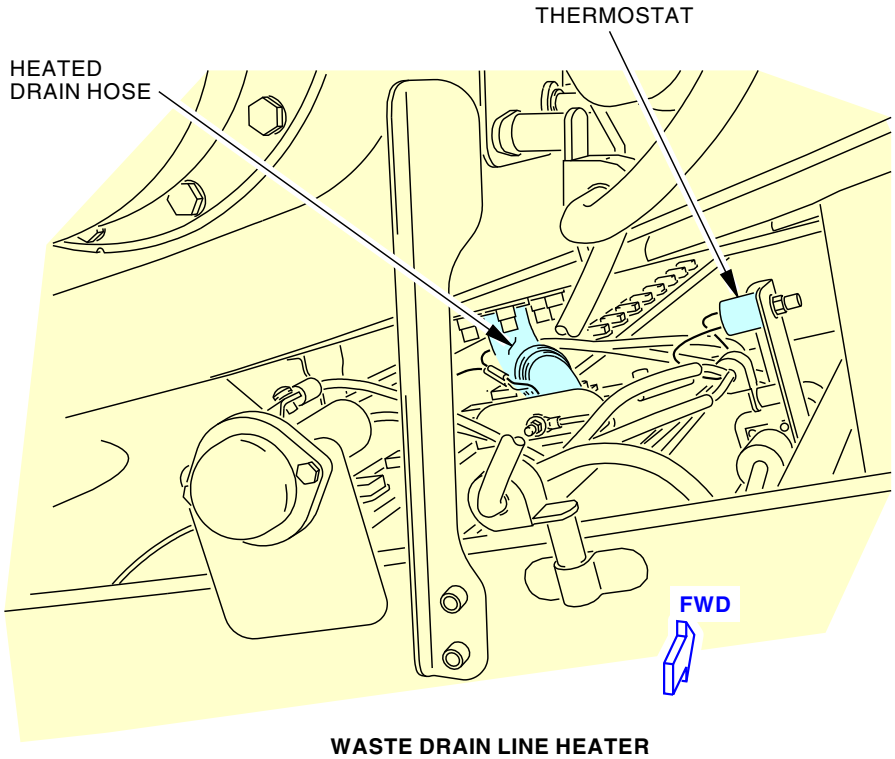

WASTE DRAIN LINE HEATER

A

G33932 S0006573208_V2

Drain and Water Supply Line Heater Access
Figure 201/30-71-00-990-802 (Sheet 1 of 3)

ECCN 9E991 BOEING PROPRIETARY - See title page for details

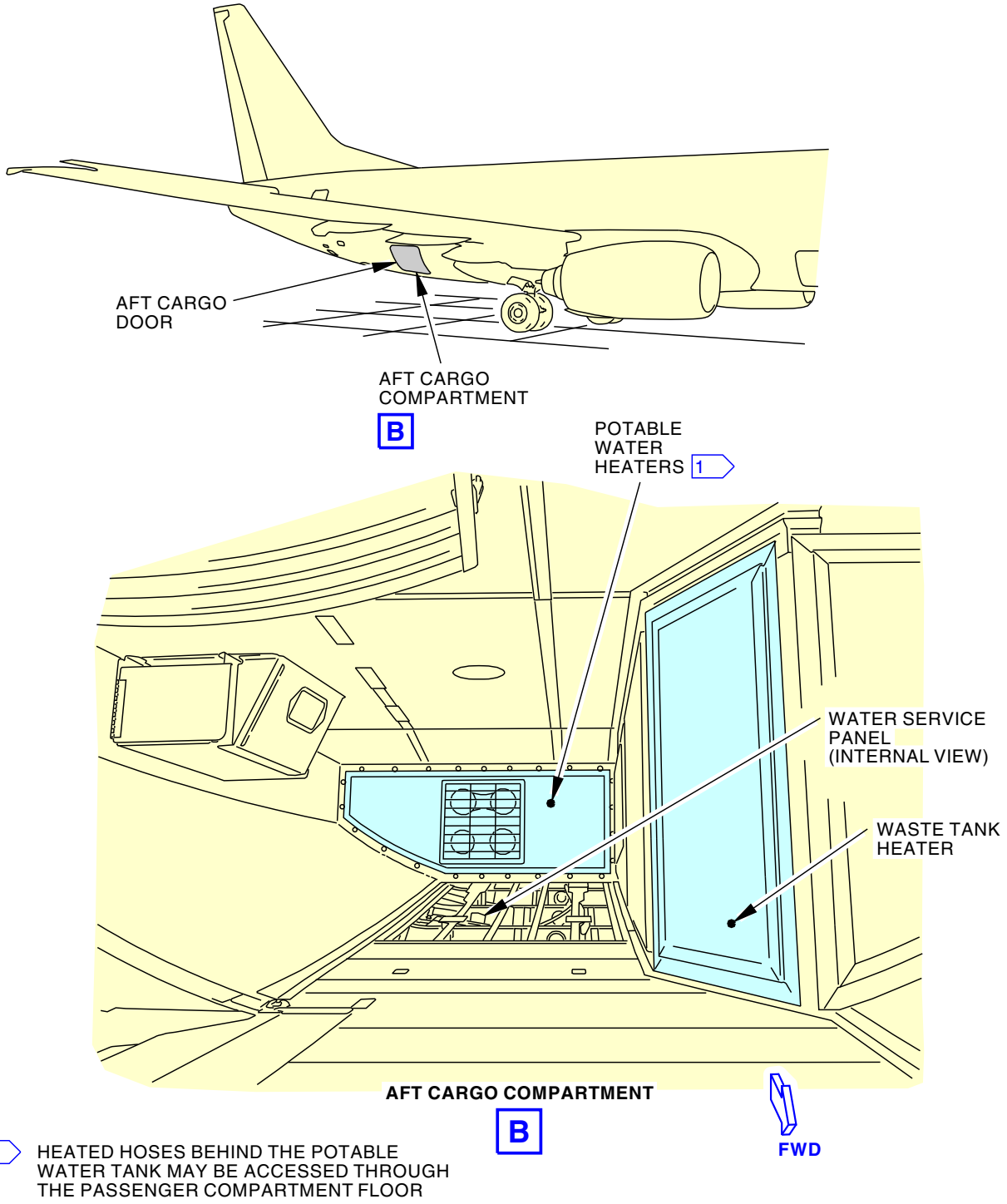

G33939 S0006573209_V2

Drain and Water Supply Line Heater Access
Figure 201/30-71-00-990-802 (Sheet 2 of 3)

ECCN 9E991 BOEING PROPRIETARY - See title page for details

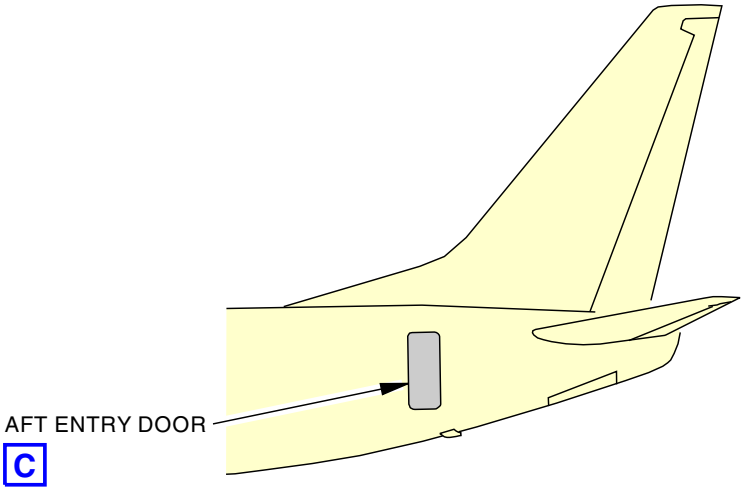

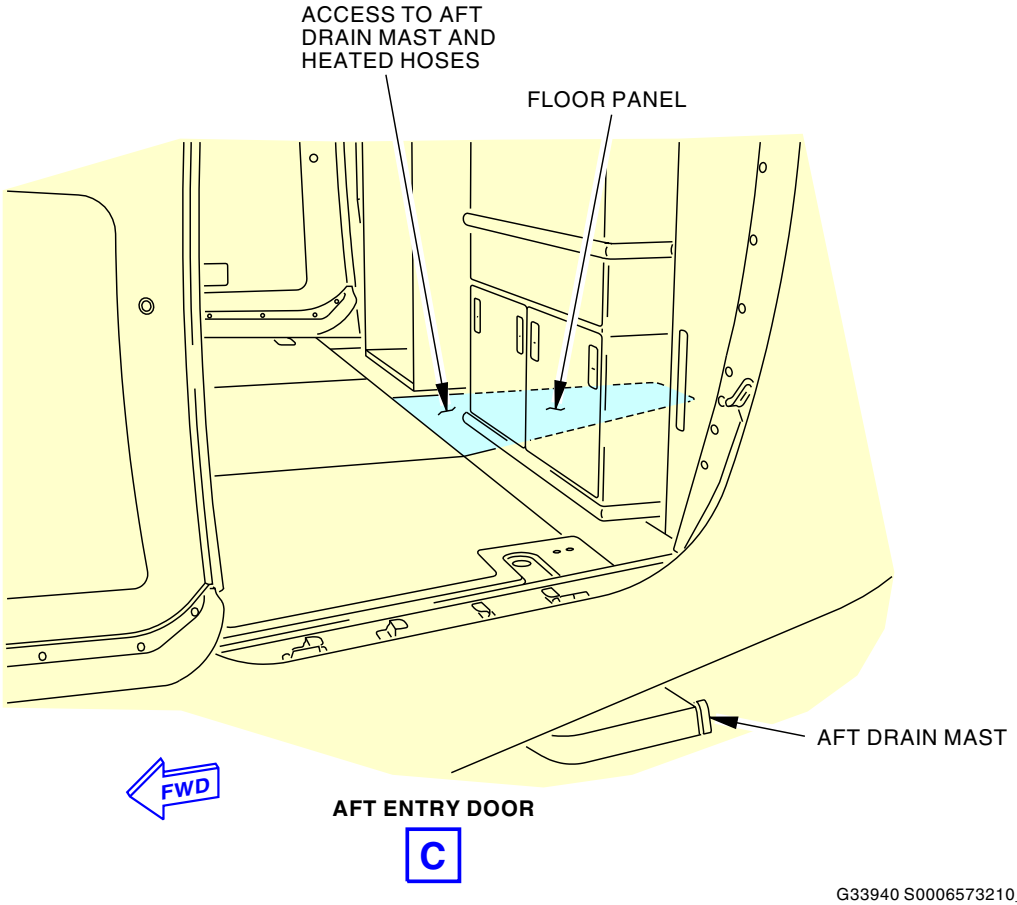

G33940 S0006573210_V2

Drain and Water Supply Line Heater Access
Figure 201/30-71-00-990-802 (Sheet 3 of 3)

ECCN 9E991 BOEING PROPRIETARY - See title page for details

TASK 30-71-00-440-801

4. Drain Heaters - Activation

(Figure 201)

A. General

(1) This task will activate the power to the drain heaters.

B. Location Zones

Zone	Area
143	Area Below Aft Cargo Compartment - Left
144	Area Below Aft Cargo Compartment - Right

C. Procedure

SUBTASK 30-71-00-420-001

WARNING

BE CAREFUL WHEN YOU DO WORK AROUND ENERGIZED PANELS. HIGH VOLTAGES CAN KILL YOU.

(1) Remove the safety tags and close these circuit breakers:

CAPT Electrical System Panel, P18-3

Row	Col	Number	Name
D	18	C01463	WASTE/WTR LINE HEATERS
E	3	C00234	HEATERS DRAIN MAST GND
E	4	C00700	HEATERS DRAIN MAST AIR
E	5	C00233	HEATERS DRAIN
E	18	C01473	HOSE HEATERS

END OF TASK

ECCN 9E991 BOEING PROPRIETARY - See title page for details

DRAIN AND WATER SUPPLY LINE HEATING - ADJUSTMENT/TEST

1. General

A. This procedure has general instructions for testing the water supply, drains, and waste anti-icing system. This procedure includes these tests:

(1) Drain mast heater ground and air mode tests

(2) Heater tests

TASK 30-71-00-720-801

2. Drain Mast Heater Ground and Air Mode Test

A. References

Reference	Title
24-22-00-860-813	Supply External Power (P/B 201)
32-09-00-840-801	Prepare to Put the Airplane in the Air Mode (P/B 201)
32-09-00-860-801	Put the Airplane in the Air Mode (P/B 201)
32-09-00-860-802	Return the Airplane to the Ground Mode (P/B 201)
38-31-01-000-801	Forward Drain Mast Removal (P/B 401)

B. Tools/Equipment

NOTE: When more than one tool part number is listed under the same "Reference" number, the tools shown are alternates to each other within the same airplane series. Tool part numbers that are replaced or non-procurable are preceded by "Opt:", which stands for Optional.

Reference	Description
COM-1572	Thermometer - Infrared, Intrinsically Safe Part #: 568 EX Supplier: 89536 Part #: 568 EX/BR Supplier: 89536 Part #: 568 EX/CN Supplier: 89536 Part #: 568 EX/ETL Supplier: 89536 Opt Part #: DHS24XC-FM Supplier: 08086 Opt Part #: DHS24XF-FM Supplier: 08086 Opt Part #: EX-MP4 A Supplier: 3GT36 Opt Part #: IR-16L3 IS Supplier: 75037
COM-2531	Clamp-On- Current Meter Part #: 324 Supplier: 89536 Part #: 374 FC Supplier: 89536 Part #: LH41A Supplier: 0JV05 Opt Part #: 321 Supplier: 89536 Opt Part #: 322 Supplier: 89536 Opt Part #: 374 Supplier: 89536 Opt Part #: MODEL 33 Supplier: 89536 Opt Part #: MODEL 36 Supplier: 89536

C. Location Zones

Zone	Area
143	Area Below Aft Cargo Compartment - Left

D. Prepare for the Procedure

SUBTASK 30-71-00-860-001

(1) Do this task: Supply External Power, TASK 24-22-00-860-813.

ECCN 9E991 BOEING PROPRIETARY - See title page for details

SUBTASK 30-71-00-861-001

(2) Make sure the CABIN/UTIL switch is set to the ON position.

E. Check the Ground Mode Operation of the Drain Mast Heaters

SUBTASK 30-71-00-720-001

> **WARNING** DO NOT TOUCH THE DRAIN MAST. WHEN THE DRAIN MAST HEATER OPERATES, THE DRAIN MAST IS SUFFICIENTLY HOT TO BURN YOU.

(1) Make sure that the forward and aft drain masts become warm.

(a) You can use an Infrared Thermometer, COM-1572 or other temperature measuring device to make sure the drain mast is at least 10 degrees F (6 degrees C) warmer than the ambient air temperature.

(b) As an alternative, you can use a clamp-on current meter, COM-2531 or equivalent to measure the current to the drain mast heater.

1) Current to the drain mast indicates that the heater is operating.

2) Refer to (TASK 38-31-01-000-801) for details to access the heater wiring.

SUBTASK 30-71-00-860-003

> **WARNING** YOU MUST DO THE STEPS IN THE TASK BELOW TO PREPARE THE SAFETY-SENSITIVE SYSTEMS FOR THE AIR MODE. FAILURE TO DO THE STEPS CORRECTLY WILL CAUSE THE AUTOMATIC OPERATION OF AIRPLANE SYSTEMS. THIS CAN CAUSE INJURY TO PERSONS OR DAMAGE TO EQUIPMENT.

(2) Do this task: Prepare to Put the Airplane in the Air Mode, TASK 32-09-00-840-801.

SUBTASK 30-71-00-860-004

(3) Put the airplane in the air mode. To put it in the air mode, do this task: Put the Airplane in the Air Mode, TASK 32-09-00-860-801.

SUBTASK 30-71-00-860-005

> **WARNING** DO NOT TOUCH THE DRAIN MAST. WHEN THE DRAIN MAST HEATER OPERATES, THE DRAIN MAST IS SUFFICIENTLY HOT TO BURN YOU.

> **CAUTION** DO NOT OPERATE THE DRAIN MAST HEATERS IN THE AIR MODE FOR MORE THAN 5 MINUTES. THE DRAIN MASTS WILL BECOME TOO HOT.

(4) Make sure that this circuit breaker is closed:

CAPT Electrical System Panel, P18-3

Row	Col	Number	Name
E	4	C00700	HEATERS DRAIN MAST AIR

SUBTASK 30-71-00-720-002

(5) Make sure that the forward and aft drain masts become hot.

ECCN 9E991 BOEING PROPRIETARY - See title page for details

(a) You can use an Infrared Thermometer, COM-1572 or other temperature measuring device to make sure the drain mast is at least 10 degrees F (6 degrees C) warmer than the ground mode test temperature.

(b) As an alternative, you can use a clamp-on current meter, COM-2531 or equivalent to measure the current to the drain mast heater.

1) Make sure there is greater current to the heater than in the ground mode.

SUBTASK 30-71-00-862-001

(6) Make sure the CAB/UTIL switch is set to the OFF position.

SUBTASK 30-71-00-860-006

(7) Put the airplane back in the ground mode. To put it in the ground mode, do this task: Return the Airplane to the Ground Mode, TASK 32-09-00-860-802.

END OF TASK

TASK 30-71-00-720-802

3. Water and Drain Heater Tests

(Figure 501)

A. References

Reference	Title
24-22-00-860-813	Supply External Power (P/B 201)
25-27-15-000-801	Carpet Removal (P/B 401)
25-27-15-400-801	Carpet - Installation (P/B 401)
25-27-21-000-801	Entry and Service Area Floor Covering - Removal (P/B 401)
25-27-21-400-801	Entry and Service Area Floor Covering - Installation (P/B 401)
25-52-06-000-801	Cargo Compartment Sidewall Lining - Removal (P/B 401)
25-52-06-400-801	Cargo Compartment Sidewall Lining - Installation (P/B 401)
25-52-10-000-801	Cargo Floor Panel - Removal (P/B 401)
25-52-10-400-801	Cargo Floor Panel - Installation (P/B 401)
25-52-17-000-801	Forward Cargo Compartment Aft Bulkhead Liner - Removal (P/B 401)
25-52-17-400-801	Forward Cargo Compartment Aft Bulkhead Liner - Installation (P/B 401)
25-52-19-000-801	Aft Cargo Compartment Aft Bulkhead Liner - Removal (P/B 401)
25-52-19-400-801	Aft Cargo Compartment Aft Bulkhead Liner - Installation (P/B 401)
25-52-20-000-801	Waste Tank Enclosure Panel - Removal (P/B 401)
25-52-20-400-801	Waste Tank Enclosure Panel - Installation (P/B 401)
SSM 30-71-11	System Schematics Manual
WDM 30-71-11	Wiring Diagram Manual

B. Tools/Equipment

NOTE: When more than one tool part number is listed under the same "Reference" number, the tools shown are alternates to each other within the same airplane series. Tool part numbers that are replaced or non-procurable are preceded by "Opt:", which stands for Optional.

ECCN 9E991 BOEING PROPRIETARY - See title page for details

Reference	Description
COM-1572	Thermometer - Infrared, Intrinsically Safe Part #: 568 EX Supplier: 89536 Part #: 568 EX/BR Supplier: 89536 Part #: 568 EX/CN Supplier: 89536 Part #: 568 EX/ETL Supplier: 89536 Opt Part #: DHS24XC-FM Supplier: 08086 Opt Part #: DHS24XF-FM Supplier: 08086 Opt Part #: EX-MP4 A Supplier: 3GT36 Opt Part #: IR-16L3 IS Supplier: 75037
COM-2531	Clamp-On- Current Meter Part #: 324 Supplier: 89536 Part #: 374 FC Supplier: 89536 Part #: LH41A Supplier: 0JV05 Opt Part #: 321 Supplier: 89536 Opt Part #: 322 Supplier: 89536 Opt Part #: 374 Supplier: 89536 Opt Part #: MODEL 33 Supplier: 89536 Opt Part #: MODEL 36 Supplier: 89536

C. Consumable Materials

Reference	Description	Specification
G02319	Spray - Freeze - Miller-Stephenson MS-242N	
G02320	Ice - Crushed	

D. Location Zones

Zone	Area
143	Area Below Aft Cargo Compartment - Left

E. Prepare for the Procedure

SUBTASK 30-71-00-860-007

(1) Do this task: Supply External Power, TASK 24-22-00-860-813.

F. Procedure

NOTE: You should not feel the heater as a procedure to measure for heat.

SUBTASK 30-71-00-010-001

(1) Get access to the heater and controlling thermostat (if applicable).

(a) Use the schematic (SSM 30-71-11) to determine the location of the heater and thermostat.

(b) Use (Figure 501) to identify access requirements.

(c) Do the necessary tasks to access the heater and thermostat.

1) Do this task: Cargo Floor Panel - Removal, TASK 25-52-10-000-801.

2) Do this task: Forward Cargo Compartment Aft Bulkhead Liner - Removal, TASK 25-52-17-000-801.

3) Do this task: Aft Cargo Compartment Aft Bulkhead Liner - Removal, TASK 25-52-19-000-801.

4) Do this task: Cargo Compartment Sidewall Lining - Removal, TASK 25-52-06-000-801.

5) Do this task: Waste Tank Enclosure Panel - Removal, TASK 25-52-20-000-801.

6) Do this task: Carpet Removal, TASK 25-27-15-000-801.

ECCN 9E991 BOEING PROPRIETARY - See title page for details

7) Do this task: Entry and Service Area Floor Covering - Removal, TASK 25-27-21-000-801.

SUBTASK 30-71-00-720-003

(2) If the heater is controlled by a thermostat apply the MS-242N spray, G02319, ice, G02320, or dry ice to decrease the temperature of the thermostat, (WDM 30-71-11).

SUBTASK 30-71-00-720-004

(3) Make sure the heater gets warm.

(a) You can use a Infrared Thermometer, COM-1572 or other temperature measuring device to make sure there is an increase of at least 10 degrees F (6 degrees C) above the ambient air temperature.

(b) As an alternative, you can use a clamp-on current meter, COM-2531 or equivalent to measure the current to the heater.

(c) Current to the heater indicates that the heater is operating.

G. Put the Airplane Back to its Usual Condition

SUBTASK 30-71-00-410-002

(1) Replace or close the panels or doors used to access the heater and thermostat.

(a) Do this task: Cargo Floor Panel - Installation, TASK 25-52-10-400-801.

(b) Do this task: Forward Cargo Compartment Aft Bulkhead Liner - Installation, TASK 25-52-17-400-801.

(c) Do this task: Aft Cargo Compartment Aft Bulkhead Liner - Installation, TASK 25-52-19-400-801.

(d) Do this task: Cargo Compartment Sidewall Lining - Installation, TASK 25-52-06-400-801.

(e) Do this task: Waste Tank Enclosure Panel - Installation, TASK 25-52-20-400-801.

(f) Do this task: Carpet - Installation, TASK 25-27-15-400-801.

(g) Do this task: Entry and Service Area Floor Covering - Installation, TASK 25-27-21-400-801

END OF TASK

ECCN 9E991 BOEING PROPRIETARY - See title page for details

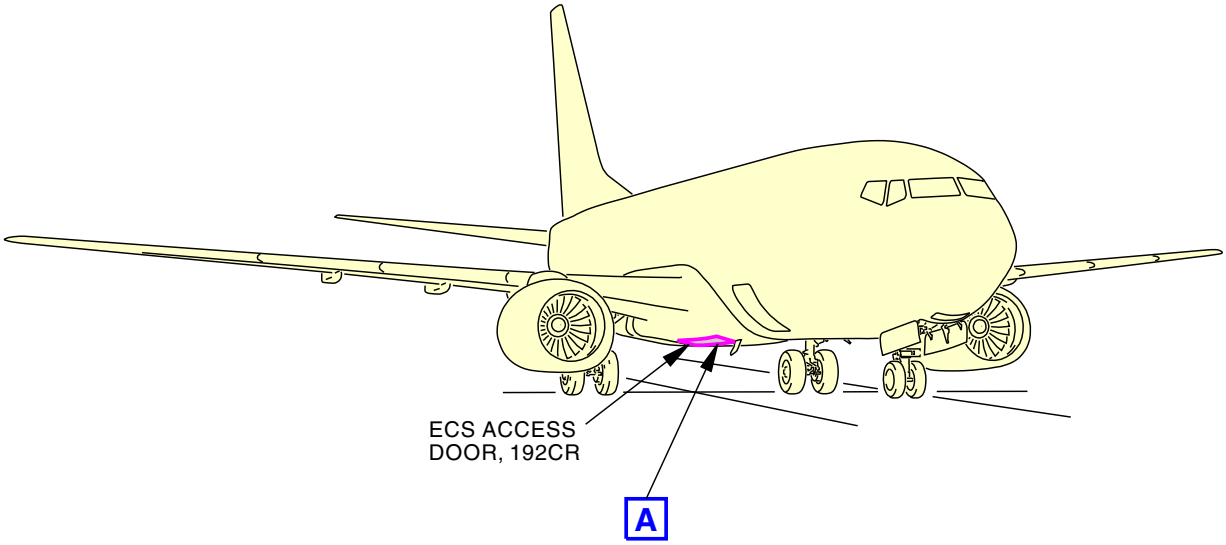

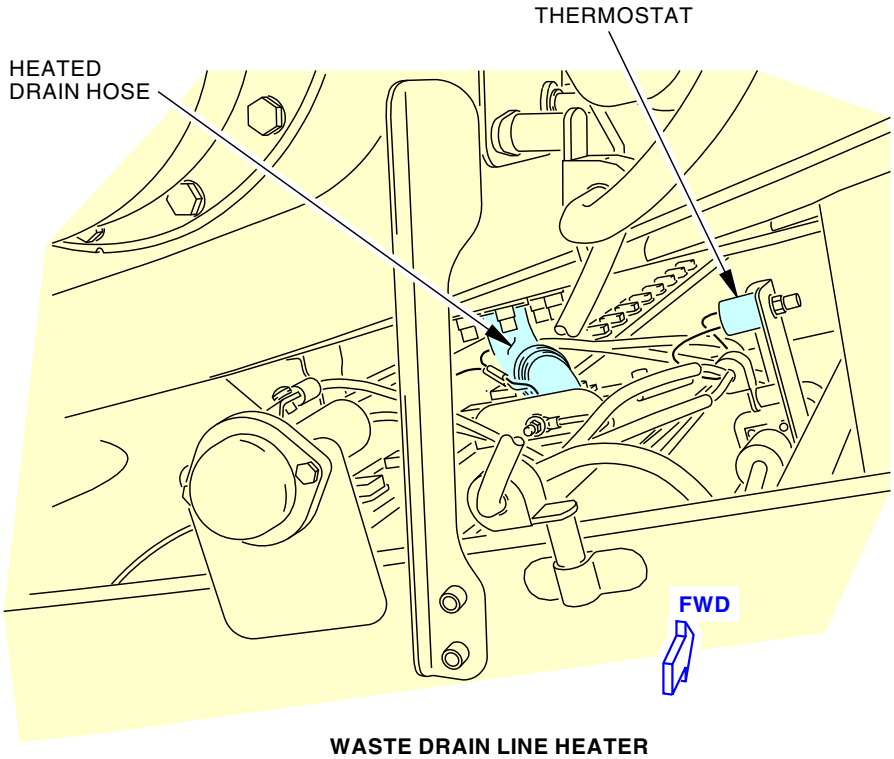

WASTE DRAIN LINE HEATER

A

G33932 S0006573208_V2

Drain and Water Supply Line Heater Access
Figure 501/30-71-00-990-801 (Sheet 1 of 3)

ECCN 9E991 BOEING PROPRIETARY - See title page for details

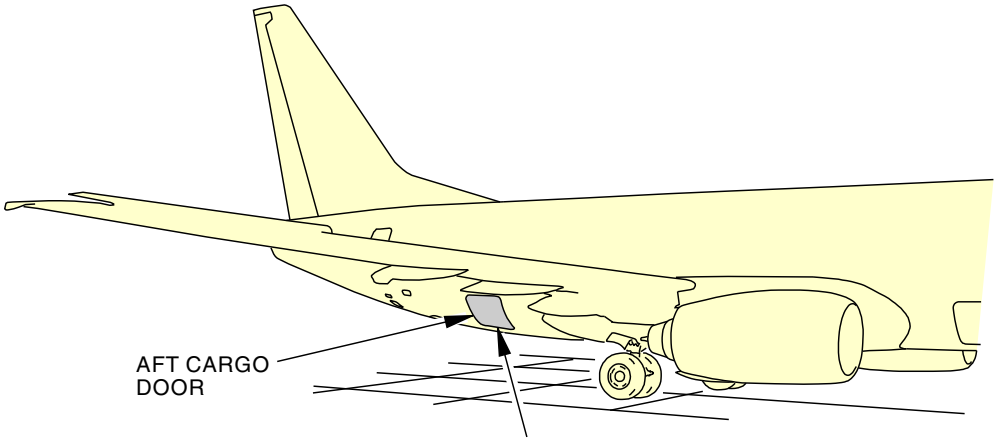

B

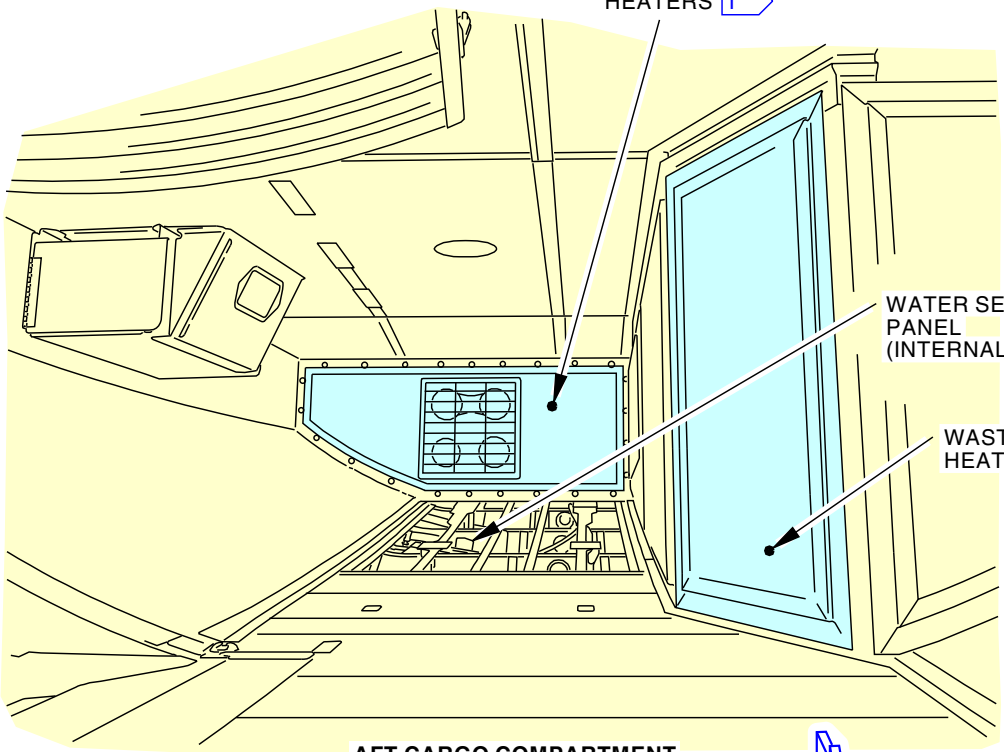

AFT CARGO COMPARTMENT

B

FWD

1 HEATED HOSES BEHIND THE POTABLE WATER TANK MAY BE ACCESSED THROUGH THE PASSENGER COMPARTMENT FLOOR

G33939 S0006573209_V2

Drain and Water Supply Line Heater Access
Figure 501/30-71-00-990-801 (Sheet 2 of 3)

ECCN 9E991 BOEING PROPRIETARY - See title page for details

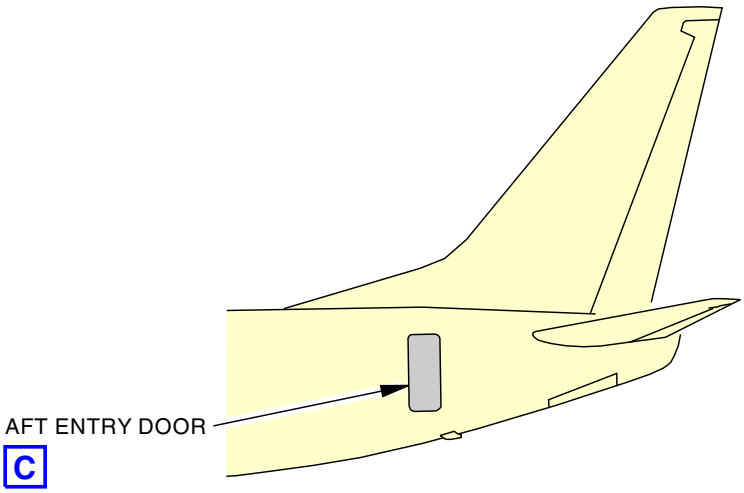

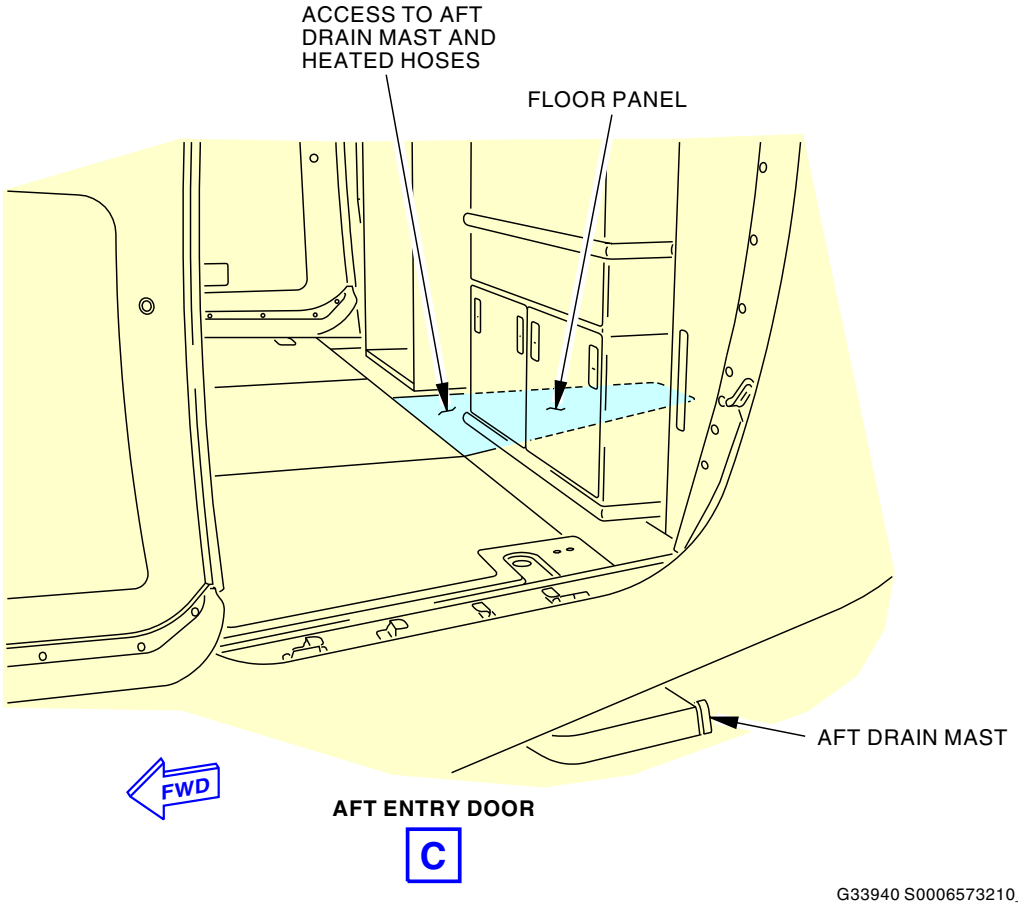

G33940 S0006573210_V2

Drain and Water Supply Line Heater Access
Figure 501/30-71-00-990-801 (Sheet 3 of 3)

ECCN 9E991 BOEING PROPRIETARY - See title page for details

POTABLE WATER FILL FITTING HEATER - REMOVAL/INSTALLATION

1. General

A. This procedure has these tasks:

(1) A removal of the potable water fill fitting heater

(2) An installation of the potable water fill fitting heater.

TASK 30-71-01-000-801

2. Potable Water Fill Fitting Heater Removal

(Figure 401)

A. General

(1) This task gives instructions to remove the Potable Water Fill Fitting Heater.

B. References

Reference	Title
25-52-10-000-801	Cargo Floor Panel - Removal (P/B 401)

C. Location Zones

Zone	Area
117	Electrical and Electronics Compartment - Left
142	Aft Cargo Compartment - Right
822	Aft Cargo Door

D. Access Panels

Number	Name/Location
117A	Electronic Equipment Access Door
146AR	Water Service Door
822	Aft Cargo Door

E. Prepare for the Removal

SUBTASK 30-71-01-860-001

(1) Open these circuit breakers and install safety tags:

CAPT Electrical System Panel, P18-3

Row	Col	Number	Name
D	18	C01463	WASTE/WTR LINE HEATERS
E	5	C00233	HEATERS DRAIN

SUBTASK 30-71-01-010-008

(2) To get access to the P91 panel, open this access panel:

Number	Name/Location
117A	Electronic Equipment Access Door

SUBTASK 30-71-01-860-006

WARNING

WHEN YOU OPEN THE P91 AND P92 PANELS, MAKE SURE THAT THE OUTER DOOR STAYS AS OPEN AS POSSIBLE. IF THE OUTER DOOR TURNS IN, THE ATTACHED DOOR COMPONENTS COULD TOUCH THE INNER DOOR COMPONENTS. THIS CAN CAUSE AN ARC CONDITION WHEN YOU SUPPLY POWER. IF YOU DO NOT OBEY, DAMAGE TO EQUIPMENT AND INJURY TO PERSONNEL CAN OCCUR.

ECCN 9E991 BOEING PROPRIETARY - See title page for details

(WARNING PRECEDES)

> **WARNING**
> DO NOT TOUCH THE CONDUCTORS IN THE P91 AND P92 PANELS. BE CAREFUL WHEN YOU GET ACCESS TO THE CIRCUIT BREAKERS ON THE INNER SIDE OF THE P91 AND P92 PANELS (ROW F). IF IT IS POSSIBLE, REMOVE AIRPLANE ELECTRICAL POWER FIRST. THE P91 AND P92 PANELS HAVE HIGH VOLTAGES AND CURRENTS. ELECTRICAL VOLTAGE AND CURRENT CAN KILL YOU OR CAUSE INJURIES.

(3) Open these circuit breakers and install safety tags:

Power Distribution Panel Number 1, P91

Row	Col	Number	Name
LOM 402, 404, 406			
A	18	C00873	POT WATER COMPRESSOR
LOM 407, 411, 412, 415, 416, 420, 422-434, 437-447, 450-999			
D	11	C00873	POT WATER COMPRESSOR

LOM ALL

SUBTASK 30-71-01-010-001

(4) Open this access panel:

Number	Name/Location
146AR	Water Service Door

SUBTASK 30-71-01-040-001

(5) Pull the handle for the potable water fill valve to the OPEN position.

NOTE: This handle is on the water service panel.

SUBTASK 30-71-01-010-002

(6) Open this access panel:

Number	Name/Location
822	Aft Cargo Door

SUBTASK 30-71-01-010-003

(7) To remove the floor panel above the water service panel, do this task: Cargo Floor Panel - Removal, TASK 25-52-10-000-801.

F. Potable Water Fill Fitting Heater Removal

SUBTASK 30-71-01-020-001

(1) Disconnect the heated hose from the fill fitting heater [1].

SUBTASK 30-71-01-020-002

(2) Remove the bolts [4] that attach the fill fitting and fill fitting heater [1] to the structure.

SUBTASK 30-71-01-020-003

(3) Remove the thermal spacers [2], O-ring [3], and fill fitting heater [1].

END OF TASK

ECCN 9E991 BOEING PROPRIETARY - See title page for details

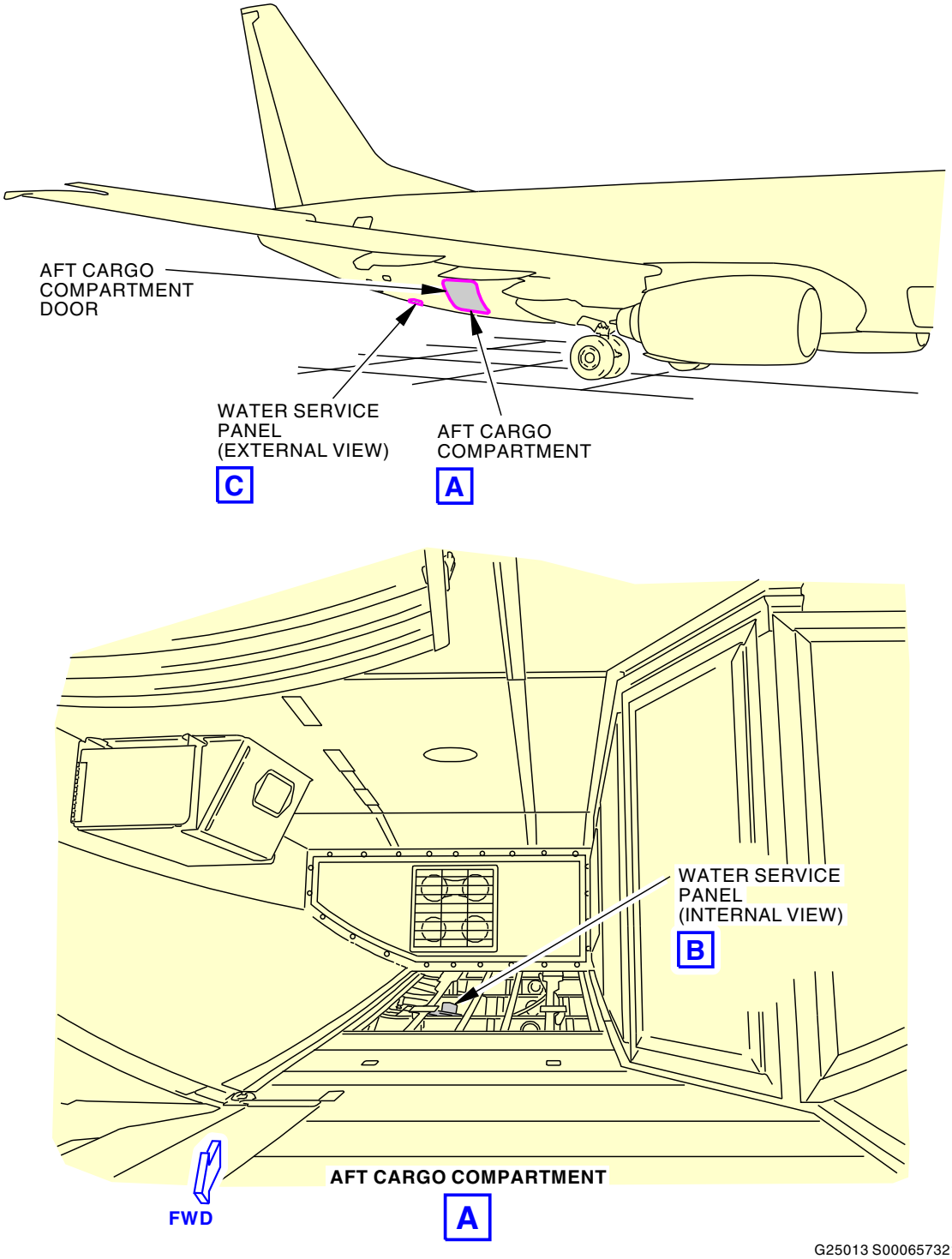

G25013 S0006573214_V2

Potable Water Fill Fitting Heater Installation
Figure 401/30-71-01-990-801 (Sheet 1 of 2)

ECCN 9E991 BOEING PROPRIETARY - See title page for details

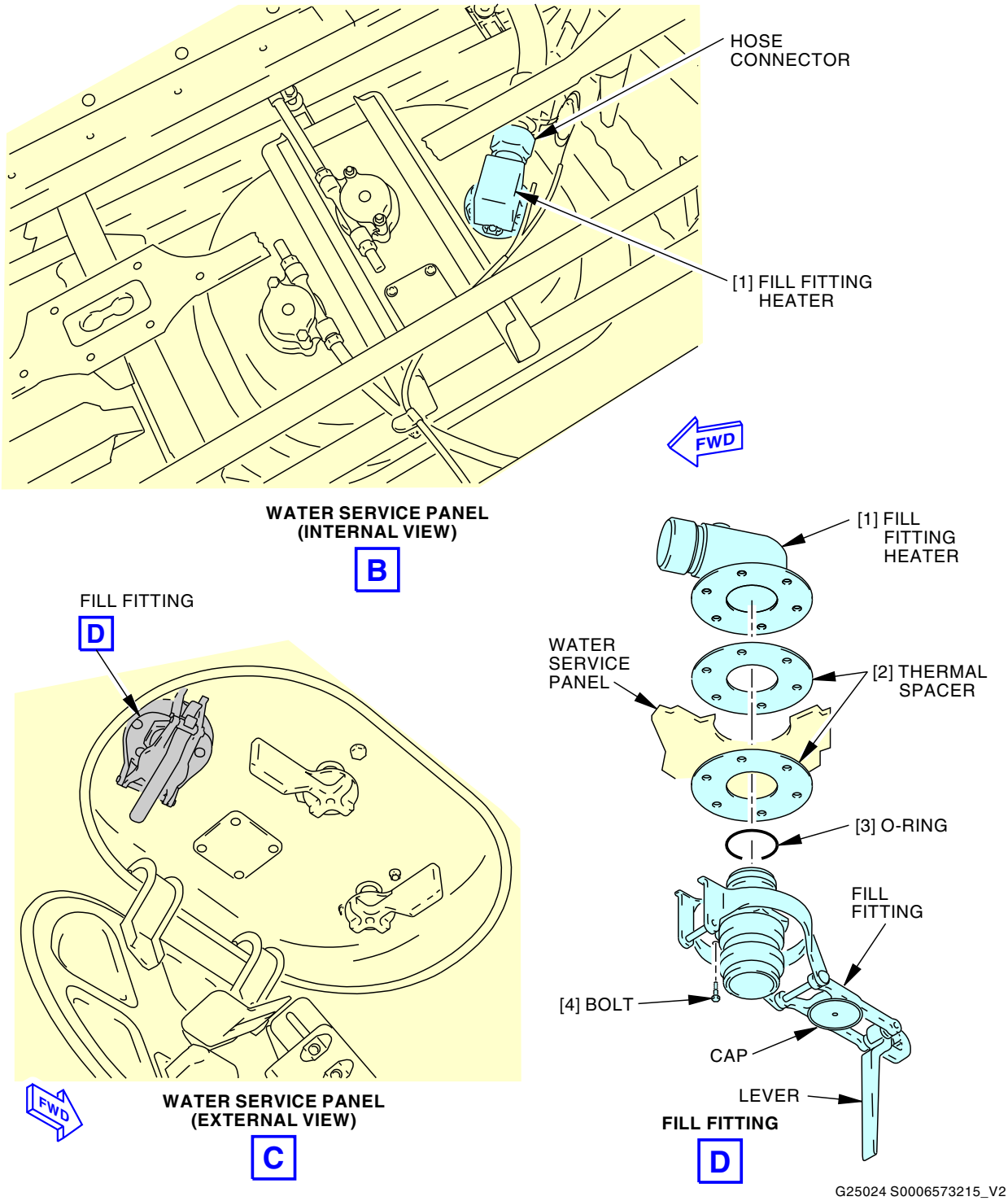

Potable Water Fill Fitting Heater Installation
Figure 401/30-71-01-990-801 (Sheet 2 of 2)

ECCN 9E991 BOEING PROPRIETARY - See title page for details

TASK 30-71-01-400-801

3. Potable Water Fill Fitting Heater Installation

(Figure 401)

A. References

Reference	Title
12-14-01-600-802	Potable Water Tank - Fill (P/B 301)
25-52-10-400-801	Cargo Floor Panel - Installation (P/B 401)
38-10-00-600-801	Potable Water System - Disinfectant (P/B 201)

B. Consumable Materials

Reference	Description	Specification
A00247	Sealant - Pressure And Environmental - Chromate Type	BMS5-95

C. Location Zones

Zone	Area
117	Electrical and Electronics Compartment - Left
142	Aft Cargo Compartment - Right
822	Aft Cargo Door

D. Access Panels

Number	Name/Location
117A	Electronic Equipment Access Door
146AR	Water Service Door
822	Aft Cargo Door

E. Potable Water Fill Fitting Heater Installation

SUBTASK 30-71-01-420-001

(1) Apply sealant, A00247, to all the mating surfaces of the thermal spacers [2] and fill fitting heater [1].

SUBTASK 30-71-01-420-002

(2) Put the fill fitting heater [1], thermal spacer [2], and O-ring [3] in position.

SUBTASK 30-71-01-420-005

(3) Apply sealant, A00247, to the bolts [4] and install the bolts [4].

SUBTASK 30-71-01-420-004

(4) Connect the heated hose to the fill fitting heater [1].

(a) Tighten the heated hose to the fill fitting to 620 ±80 in-lb (70 ±9 N·m).

SUBTASK 30-71-01-670-001

(5) Disinfect the potable water system (TASK 38-10-00-600-801).

ECCN 9E991 BOEING PROPRIETARY - See title page for details

F. Potable Water Fill Fitting Heater Installation Test

SUBTASK 30-71-01-860-007

> **WARNING** WHEN YOU OPEN THE P91 AND P92 PANELS, MAKE SURE THAT THE OUTER DOOR STAYS AS OPEN AS POSSIBLE. IF THE OUTER DOOR TURNS IN, THE ATTACHED DOOR COMPONENTS COULD TOUCH THE INNER DOOR COMPONENTS. THIS CAN CAUSE AN ARC CONDITION WHEN YOU SUPPLY POWER. IF YOU DO NOT OBEY, DAMAGE TO EQUIPMENT AND INJURY TO PERSONNEL CAN OCCUR.

> **WARNING** DO NOT TOUCH THE CONDUCTORS IN THE P91 AND P92 PANELS. BE CAREFUL WHEN YOU GET ACCESS TO THE CIRCUIT BREAKERS ON THE INNER SIDE OF THE P91 AND P92 PANELS (ROW F). IF IT IS POSSIBLE, REMOVE AIRPLANE ELECTRICAL POWER FIRST. THE P91 AND P92 PANELS HAVE HIGH VOLTAGES AND CURRENTS. ELECTRICAL VOLTAGE AND CURRENT CAN KILL YOU OR CAUSE INJURIES.

(1) Remove the safety tags and close these circuit breakers:

Power Distribution Panel Number 1, P91

Row	Col	Number	Name
LOM 402, 404, 406			
A	18	C00873	POT WATER COMPRESSOR
LOM 407, 411, 412, 415, 416, 420, 422-434, 437-447, 450-999			
D	11	C00873	POT WATER COMPRESSOR

LOM ALL

SUBTASK 30-71-01-860-002

(2) Remove the safety tags and close these circuit breakers:

CAPT Electrical System Panel, P18-3

Row	Col	Number	Name
D	18	C01463	WASTE/WTR LINE HEATERS
E	5	C00233	HEATERS DRAIN

SUBTASK 30-71-01-720-001

(3) Make sure that the fill fitting heater [1] becomes warm.

NOTE: The fill fitting heater will not become warm if the ambient temperature is above 60°F (16°C).

SUBTASK 30-71-01-710-001

(4) Fill the potable water tank (TASK 12-14-01-600-802).

(a) Make sure that there is no leakage at the water fill fitting.

G. Put Airplane Back to Its Usual Condition

SUBTASK 30-71-01-410-001

> **WARNING** SEAL THE CARGO COMPARTMENT WITH THE LINING. OBEY THE INSTRUCTIONS IN THE SPECIFIED PROCEDURE WHEN YOU INSTALL THE LINING. IF YOU INSTALL THE LINING INCORRECTLY, THE SMOKE CAN GET INTO THE PASSENGER COMPARTMENT DURING A FIRE.

(1) Do this task: Cargo Floor Panel - Installation, TASK 25-52-10-400-801.

ECCN 9E991 BOEING PROPRIETARY - See title page for details

SUBTASK 30-71-01-410-004

(2) Close this access panel:

Number	Name/Location
117A	Electronic Equipment Access Door

SUBTASK 30-71-01-410-002

(3) Close this access door:

Number	Name/Location
822	Aft Cargo Door

SUBTASK 30-71-01-410-003

(4) Close this access panel:

Number	Name/Location
146AR	Water Service Door

END OF TASK

ECCN 9E991 BOEING PROPRIETARY - See title page for details

GRAY WATER DRAIN LINE HEATER - REMOVAL/INSTALLATION

1. General

A. This procedure has these tasks:

(1) A removal of the gray water drain line heater

(2) An installation of the gray water drain line heater.

TASK 30-71-02-000-801

2. Gray Water Drain Line Heater Removal

(Figure 401)

A. General

(1) This task gives instructions to remove the Gray Water Drain Line Heater.

(2) A heated drain hose prevents water flowing to the forward drain mast from freezing. The heated hose is under a floor panel in the forward cargo compartment. A thermostat controls the power to the heater and is near the heated drain hose.

B. References

Reference	Title
06-41-00-800-801	Finding an Access Door or Panel on the Lower Half of the Fuselage (P/B 201)
25-52-17-000-801	Forward Cargo Compartment Aft Bulkhead Liner - Removal (P/B 401)
WDM 30-71-11	Wiring Diagram Manual

C. Location Zones

Zone	Area
122	Forward Cargo Compartment - Right

D. Access Panels

Number	Name/Location
192CR	ECS Access Door
192DR	ECS High Pressure Access Door
821	Forward Cargo Door

E. Prepare for the Removal

SUBTASK 30-71-02-860-004

(1) Open these circuit breakers and install safety tags:

CAPT Electrical System Panel, P18-3

Row	Col	Number	Name
E	3	C00234	HEATERS DRAIN MAST GND
E	4	C00700	HEATERS DRAIN MAST AIR

SUBTASK 30-71-02-010-003

(2) Open this access panel:

Number	Name/Location
821	Forward Cargo Door

SUBTASK 30-71-02-010-004

(3) Remove the aft bulkhead liner from the forward cargo compartment, do this task: Forward Cargo Compartment Aft Bulkhead Liner - Removal, TASK 25-52-17-000-801.

ECCN 9E991 BOEING PROPRIETARY - See title page for details

F. Gray Water Drain Line Heater Removal

SUBTASK 30-71-02-020-001

(1) Disconnect the electrical splices from the gray water drain line [1] (WDM 30-71-11).

SUBTASK 30-71-02-020-002

(2) Remove the clamp [4] from the gray water drain line [1].

SUBTASK 30-71-02-020-007

(3) Remove the bolts [5] and washers [6] from the drain line fitting.

SUBTASK 30-71-02-020-008

(4) Remove the drain line fitting.

SUBTASK 30-71-02-020-003

CAUTION

DO NOT OPEN THE ECS ACCESS DOOR 192CR, UNTIL YOU OPEN THE ECS HIGH PRESSURE ACCESS DOOR 192DR. IF YOU DO NOT OBEY, DAMAGE TO THE ECS HIGH PRESSURE ACCESS DOOR 192DR, ITS LATCHES AND HINGES CAN OCCUR.

(5) Do these steps (TASK 06-41-00-800-801):

(a) Open this access panel:

Number	Name/Location
192DR	ECS High Pressure Access Door

(b) Open this access panel:

Number	Name/Location
192CR	ECS Access Door

SUBTASK 30-71-02-020-004

(6) Remove the clamp [4] from the gray water drain line [1].

SUBTASK 30-71-02-020-006

(7) Remove the gray water drain line [1] from the airplane.

END OF TASK

ECCN 9E991 BOEING PROPRIETARY - See title page for details

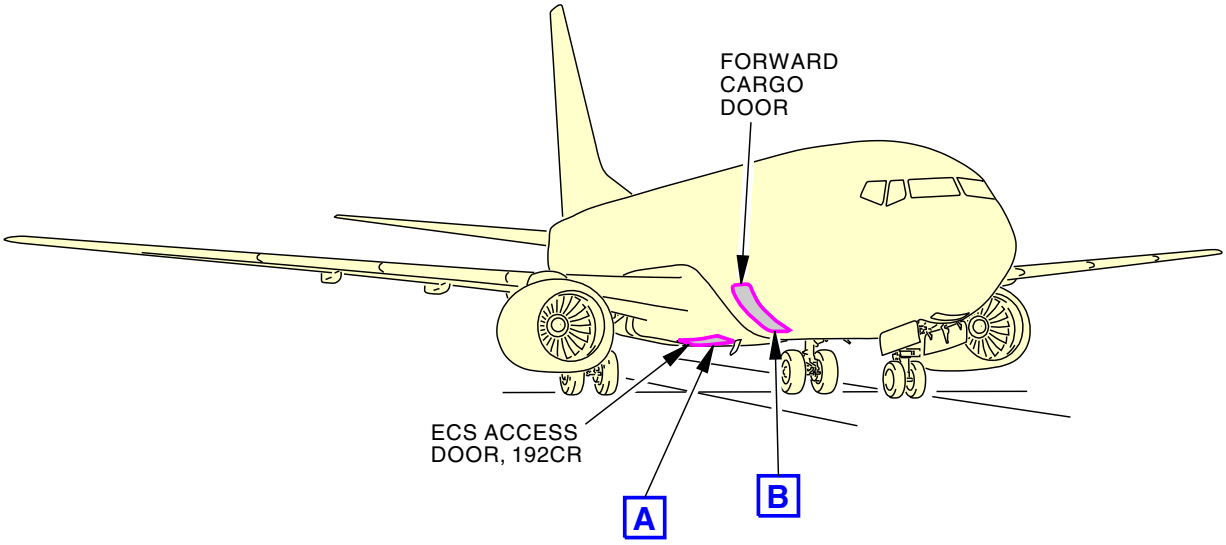

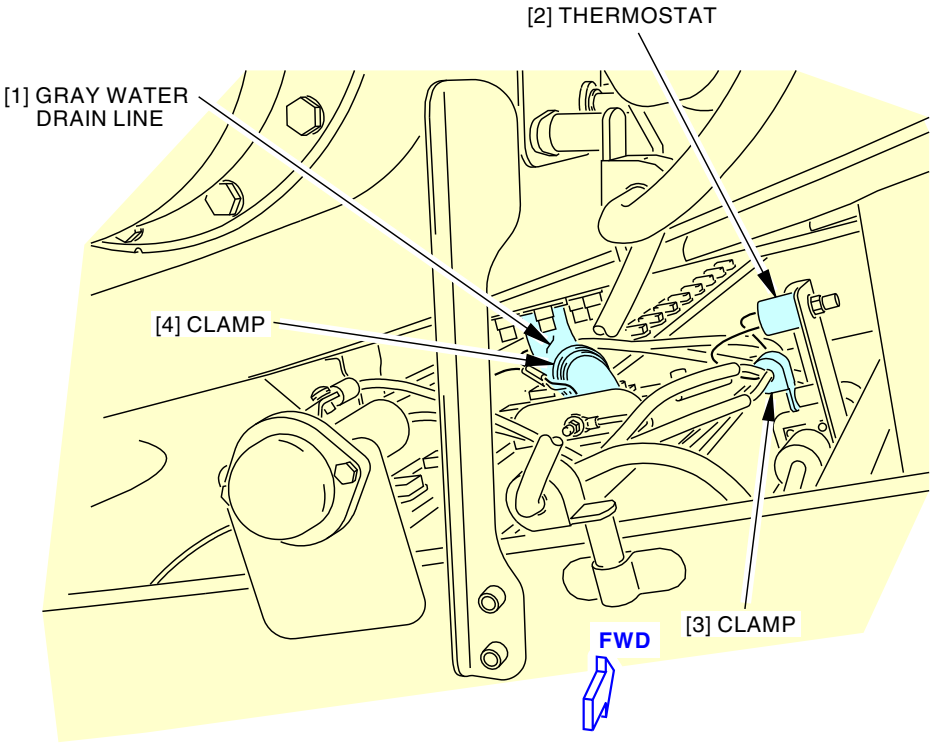

GRAY WATER DRAIN LINE

A

G28268 S0006573220_V2

Gray Water Drain Line Installation
Figure 401/30-71-02-990-801 (Sheet 1 of 2)

ECCN 9E991 BOEING PROPRIETARY - See title page for details

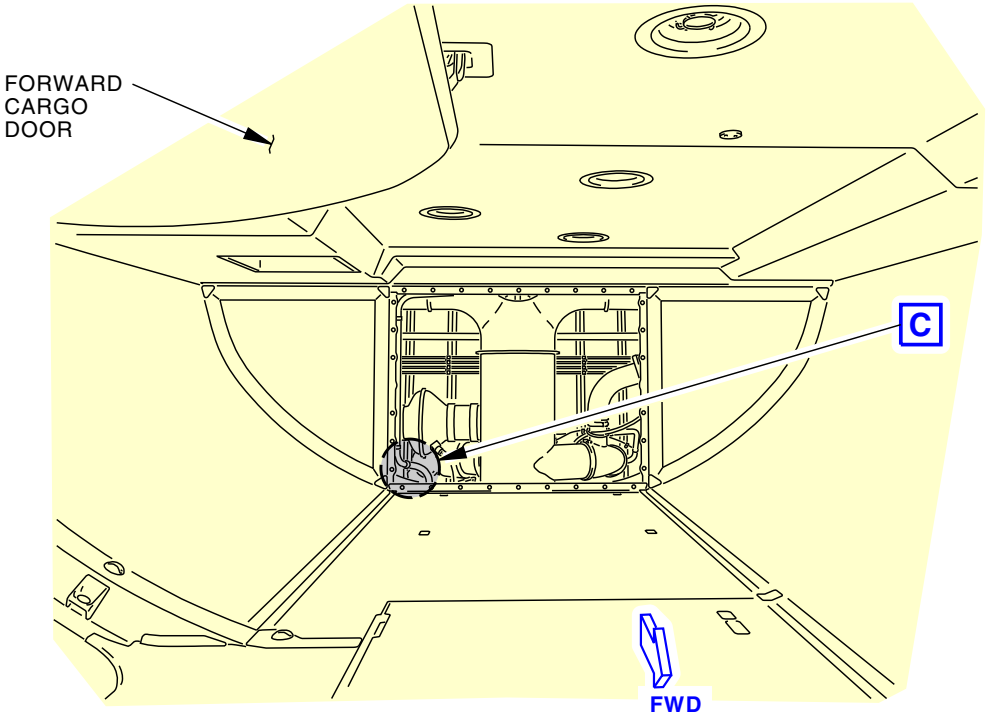

FORWARD CARGO COMPARTMENT

B

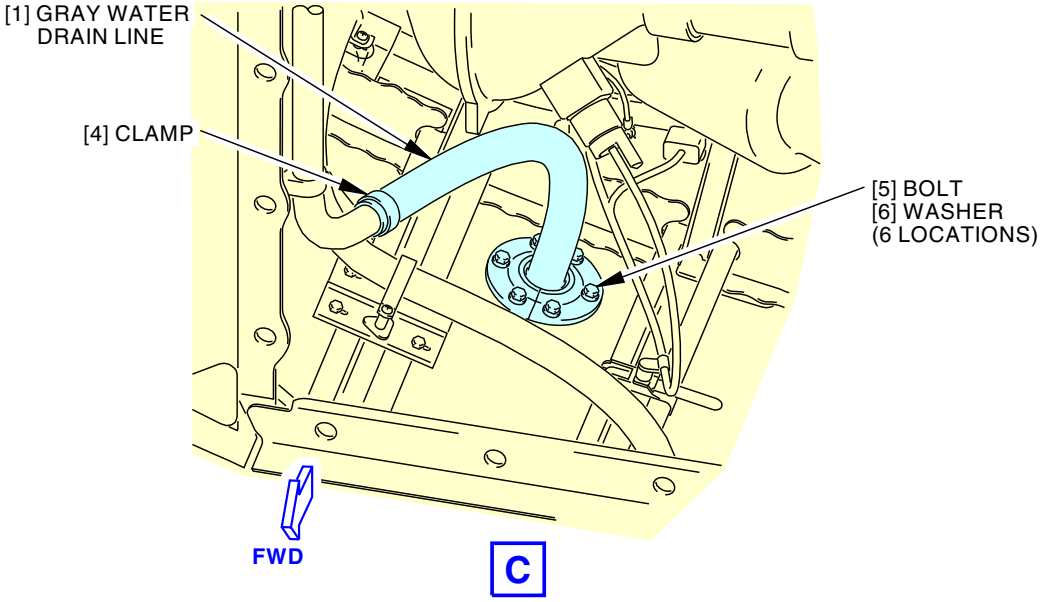

G28276 S0006573221_V2

Gray Water Drain Line Installation
Figure 401/30-71-02-990-801 (Sheet 2 of 2)

ECCN 9E991 BOEING PROPRIETARY - See title page for details

TASK 30-71-02-400-801

3. Gray Water Drain Line Heater Installation

(Figure 401)

A. General

(1) This task gives instructions to install the Gray Water Drain Line Heater.

B. References

Reference	Title
06-41-00-800-801	Finding an Access Door or Panel on the Lower Half of the Fuselage (P/B 201)
25-52-17-400-801	Forward Cargo Compartment Aft Bulkhead Liner - Installation (P/B 401)

C. Consumable Materials

Reference	Description	Specification
G01012	Compound - Carbon Dioxide, Solid (Dry Ice - Any Commercial Grade)	
G02319	Spray - Freeze - Miller-Stephenson MS-242N	
G02320	Ice - Crushed	

D. Location Zones

Zone	Area
122	Forward Cargo Compartment - Right

E. Access Panels

Number	Name/Location
192CR	ECS Access Door
192DR	ECS High Pressure Access Door
821	Forward Cargo Door

F. Gray Water Drain Line Heater Installation

SUBTASK 30-71-02-420-001

(1) Put the gray water drain line [1] in position through the cargo compartment floor.

SUBTASK 30-71-02-420-002

(2) Tighten the clamp [4] on the gray water drain line [1].

SUBTASK 30-71-02-020-005

(3) Re-install the drain fitting and secure with the bolts [5] and washers [6].

SUBTASK 30-71-02-420-003

(4) Connect the electrical splices to the gray water drain line [1].

G. Gray Water Drain Line Heater Installation Test

SUBTASK 30-71-02-720-001

(1) Measure the temperature of the gray water drain line [1].

SUBTASK 30-71-02-860-003

(2) Remove the safety tags and close these circuit breakers:

CAPT Electrical System Panel, P18-3

Row	Col	Number	Name
E	3	C00234	HEATERS DRAIN MAST GND

ECCN 9E991 BOEING PROPRIETARY - See title page for details

(Continued)

CAPT Electrical System Panel, P18-3

Row	Col	Number	Name
E	4	C00700	HEATERS DRAIN MAST AIR

SUBTASK 30-71-02-720-002

(3) If the temperature in the area is lower than 45°F (7°C):

(a) Make sure that the temperature of the gray water drain line [1] is 5 degrees F (3 degrees C) higher than the first temperature you measured.

SUBTASK 30-71-02-720-003

(4) If the temperature in the area is higher than 45°F (7°C):

(a) Decrease the temperature of the thermostat [2].

NOTE: You can use MS-242N spray, G02319, ice, G02320, or compound, G01012, to decrease the temperature. Permit 3 to 5 minutes for the temperature of the thermostat to decrease before you check the temperature of the gray water drain line heater.

(b) Make sure that the gray water drain line [1] gets warm.

H. Put the Airplane Back to Its Usual Condition

SUBTASK 30-71-02-410-001

WARNING SEAL THE CARGO COMPARTMENT WITH THE LINING. OBEY THE INSTRUCTIONS IN THE SPECIFIED PROCEDURE WHEN YOU INSTALL THE LINING. IF YOU INSTALL THE LINING INCORRECTLY, THE SMOKE CAN GET INTO THE PASSENGER COMPARTMENT DURING A FIRE.

(1) Re-install the bulkhead liner, do this task: Forward Cargo Compartment Aft Bulkhead Liner - Installation, TASK 25-52-17-400-801.

SUBTASK 30-71-02-410-002

(2) Close this access door:

Number	Name/Location
821	Forward Cargo Door

SUBTASK 30-71-02-410-003

(3) Do these steps (TASK 06-41-00-800-801):

(a) Close this access panel:

Number	Name/Location
192CR	ECS Access Door

(b) Close this access panel:

Number	Name/Location
192DR	ECS High Pressure Access Door

NOTE: The ECS high pressure access door, 192DR, will not latch in its position if the ECS access door, 192CR, is not closed.

END OF TASK

ECCN 9E991 BOEING PROPRIETARY - See title page for details

WASTE DRAIN LINE HEATER - REMOVAL/INSTALLATION

1. General

A. This procedure has these tasks:

(1) A removal of the waste drain line heater

(2) An installation of the waste drain line heater.

TASK 30-71-03-000-801

2. Waste Drain Line Heater Removal

(Figure 401)

A. General

(1) This task gives instructions to remove the Waste Drain Line Heater.

(2) The heater blanket covers the ball valve of the waste tank.

B. References

Reference	Title
25-52-20-000-801	Waste Tank Enclosure Panel - Removal (P/B 401)
WDM 30-71-11	Wiring Diagram Manual

C. Location Zones

Zone	Area
141	Aft Cargo Compartment - Left

D. Access Panels

Number	Name/Location
822	Aft Cargo Door

E. Prepare for the Removal

SUBTASK 30-71-03-860-001

(1) Open this circuit breaker and install safety tag:

CAPT Electrical System Panel, P18-3

Row	Col	Number	Name
E	5	C00233	HEATERS DRAIN

SUBTASK 30-71-03-010-001

(2) Open this access panel:

Number	Name/Location
822	Aft Cargo Door

SUBTASK 30-71-03-010-002

(3) Do this task: Waste Tank Enclosure Panel - Removal, TASK 25-52-20-000-801.

F. Waste Drain Line Heater Removal

SUBTASK 30-71-03-020-001

(1) Remove the nut [7], screw [3], washer [4], and clamp [2] from the heater blanket [1] wires.

SUBTASK 30-71-03-020-002

(2) Disconnect the electrical connectors [5] (WDM 30-71-11).

SUBTASK 30-71-03-020-003

(3) Pull the velcro hook and pile apart to remove the heater blanket [1].

ECCN 9E991 BOEING PROPRIETARY - See title page for details

LOM 402, 404, 406, 420, 422-434, 437-447, 450-999

NOTE: The heater blanket is composed of a heater core (HBCXXX) and a jacket cover (HBJXXXX).

LOM ALL

END OF TASK

ECCN 9E991 BOEING PROPRIETARY - See title page for details

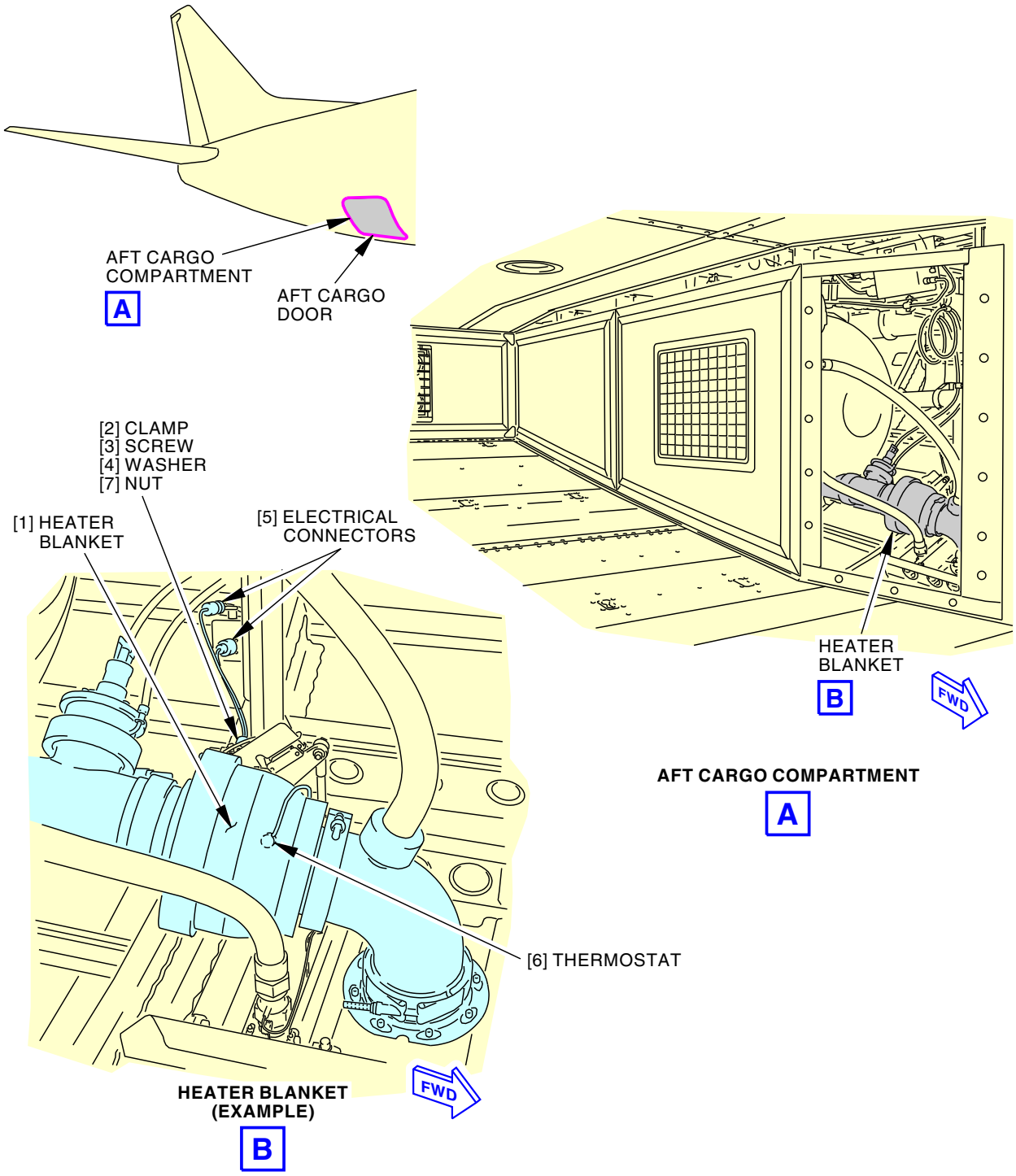

F92151 S0006573226_V3

Waste Drain Line Heater Installation
Figure 401/30-71-03-990-801

ECCN 9E991 BOEING PROPRIETARY - See title page for details

TASK 30-71-03-400-801

3. Waste Drain Line Heater Installation

(Figure 401)

A. General

(1) This task gives instructions to install the Waste Drain Line Heater.

B. References

Reference	Title
25-52-20-400-801	Waste Tank Enclosure Panel - Installation (P/B 401)

C. Consumable Materials

Reference	Description	Specification
G01012	Compound - Carbon Dioxide, Solid (Dry Ice - Any Commercial Grade)	
G02319	Spray - Freeze - Miller-Stephenson MS-242N	
G02320	Ice - Crushed	
G02360	Tape - Textile Hook And Loop Fasteners Tape (Polypropylene Hook & Nylon Loop)	BMS8-285 Type V
G50333	Tape - Hook/Loop Fastener, Flame Propagation Resistant	BMS8-372

D. Location Zones

Zone	Area
141	Aft Cargo Compartment - Left

E. Access Panels

Number	Name/Location
822	Aft Cargo Door

F. Waste Drain Line Heater Installation

SUBTASK 30-71-03-420-001

(1) Put the heater blanket [1] around the drain line ball valve.

LOM 402, 404, 406, 420, 422-434, 437-447, 450-999

(a) Install the HBCXXX heater core over the tube/valve.

(b) Cover the heater core with the HBJXXXX jacket cover.

LOM 402, 404 PRE SEP 2, 2005 FAR STD; AIRPLANES WITHOUT FAR 25.856(a) COMPLIANT THERMAL/ACOUSTIC INSULATION MATERIALS

SUBTASK 30-71-03-420-002

(2) Push the hook/loop fastening hook and loop fastener tape, G02360, or tape, G50333, and pile together to attach the heater blanket [1].

LOM 406, 407, 411, 412, 415, 416, 420, 422-434, 437-447, 450-999; LOM 402, 404 POST SEP 2, 2005 FAR STD; AIRPLANES WITH FAR 25.856(a) COMPLIANT THERMAL/ACOUSTIC INSULATION MATERIALS

SUBTASK 30-71-03-420-004

(3) Push the hook/loop fastening tape, G50333, and pile together to attach the heater blanket [1].

LOM ALL

SUBTASK 30-71-03-420-003

(4) Connect the electrical connectors [5].

ECCN 9E991 BOEING PROPRIETARY - See title page for details

SUBTASK 30-71-03-020-004

(5) If necessary, replace the clamp [2] which secures the electrical wiring.

(a) Install the clamp [2], screw [3], washer [4] and nut [7].

G. Waste Drain Line Heater Installation Test

SUBTASK 30-71-03-720-001

(1) Measure the temperature of the heater blanket [1].

SUBTASK 30-71-03-860-003

(2) Remove the safety tag and close this circuit breaker:

CAPT Electrical System Panel, P18-3

Row	Col	Number	Name
E	5	C00233	HEATERS DRAIN

SUBTASK 30-71-03-860-006

(3) Put the CAB/UTL switch on the P5-13 panel to the ON position.

SUBTASK 30-71-03-720-002

(4) If the temperature in the area is lower than 45°F (7°C):

(a) Make sure the temperature of the heater blanket [1] is 5 degrees F (3 degrees C) higher than the first temperature you measured.

SUBTASK 30-71-03-720-003

(5) If the temperature in the area is higher than 45°F (7°C):

(a) Feel the heater blanket [1] to find the thermostat [6].

NOTE: The thermostat is approximately 1 inch in diameter and is below the skin of the heater blanket.

(b) Decrease the temperature of the thermostat to below 45 degrees (7 degrees C).

NOTE: You can use MS-242N spray, G02319, ice, G02320, or compound, G01012, to decrease the temperature. Permit 3 to 5 minutes for the temperature of the thermostat to decrease before you check the temperature of the heater blanket.

(c) Make sure the heater blanket [1] gets warm.

H. Put the Airplane Back to Its Usual Condition

SUBTASK 30-71-03-410-001

WARNING

SEAL THE CARGO COMPARTMENT WITH THE LINING. OBEY THE INSTRUCTIONS IN THE SPECIFIED PROCEDURE WHEN YOU INSTALL THE LINING. IF YOU INSTALL THE LINING INCORRECTLY, THE SMOKE CAN GO INTO THE PASSENGER COMPARTMENT DURING A FIRE. THIS CAN CAUSE INJURY TO PERSONNEL.

(1) Do this task: Waste Tank Enclosure Panel - Installation, TASK 25-52-20-400-801.

SUBTASK 30-71-03-410-002

(2) Close this access door:

Number	Name/Location
822	Aft Cargo Door

SUBTASK 30-71-03-860-007

(3) Put the CAB/UTL switch on the P5-13 panel to the OFF position.

END OF TASK

ECCN 9E991 BOEING PROPRIETARY - See title page for details

WASTE TANK RINSE FITTING HEATER - REMOVAL/INSTALLATION

1. General

A. This procedure has these tasks:

(1) A removal of the waste tank rinse fitting heater

(2) An installation of the waste tank rinse fitting heater.

TASK 30-71-04-000-801

2. Waste Tank Rinse Fitting Heater Removal

(Figure 401)

A. General

(1) This task gives instructions to remove the Waste Tank Rinse Fitting Heater.

B. References

Reference	Title
12-17-01-610-801	Waste Tank Servicing (P/B 301)
25-52-20-000-801	Waste Tank Enclosure Panel - Removal (P/B 401)

C. Location Zones

Zone	Area
143	Area Below Aft Cargo Compartment - Left

D. Access Panels

Number	Name/Location
822	Aft Cargo Door

E. Prepare for the Removal

SUBTASK 30-71-04-610-001

(1) Do this task: Waste Tank Servicing, TASK 12-17-01-610-801.

NOTE: Do not add the chemical precharge after you do the task to drain and flush the waste tanks.

SUBTASK 30-71-04-010-001

(2) Open this access door:

Number	Name/Location
822	Aft Cargo Door

SUBTASK 30-71-04-010-002

(3) Do this task: Waste Tank Enclosure Panel - Removal, TASK 25-52-20-000-801.

SUBTASK 30-71-04-860-002

(4) Open this circuit breaker and install safety tag:

CAPT Electrical System Panel, P18-3

Row	Col	Number	Name
D	18	C01463	WASTE/WTR LINE HEATERS

ECCN 9E991 BOEING PROPRIETARY - See title page for details

F. Waste Tank Rinse Fitting Heater Removal

SUBTASK 30-71-04-020-002

CAUTION

AVOID KINKING OR SHARPLY BENDING HARDWIRE LEAD AS DAMAGE TO TRANSDUCER AND LEAD CAN OCCUR.

(1) Remove the splices from the rinse fitting heater [2].

SUBTASK 30-71-04-020-003

(2) Remove the rinse hose [1] from the rinse fitting heater [2].

SUBTASK 30-71-04-020-004

(3) Remove the rinse fitting heater thermostat [3] from the airplane structure.

SUBTASK 30-71-04-020-005

(4) Remove the rinse fitting heater [2] from the rinse fitting.

END OF TASK

ECCN 9E991 BOEING PROPRIETARY - See title page for details

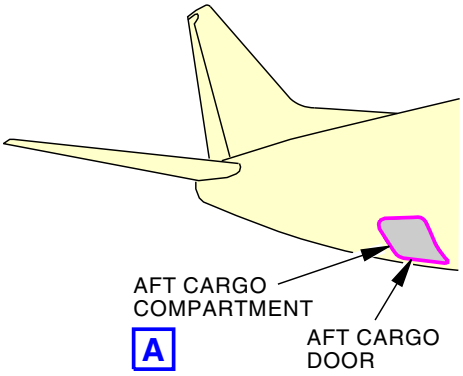

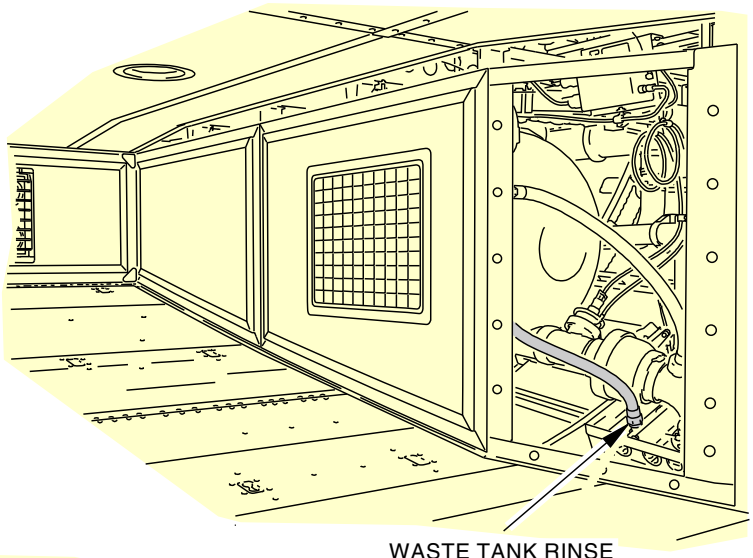

AFT CARGO COMPARTMENT

A

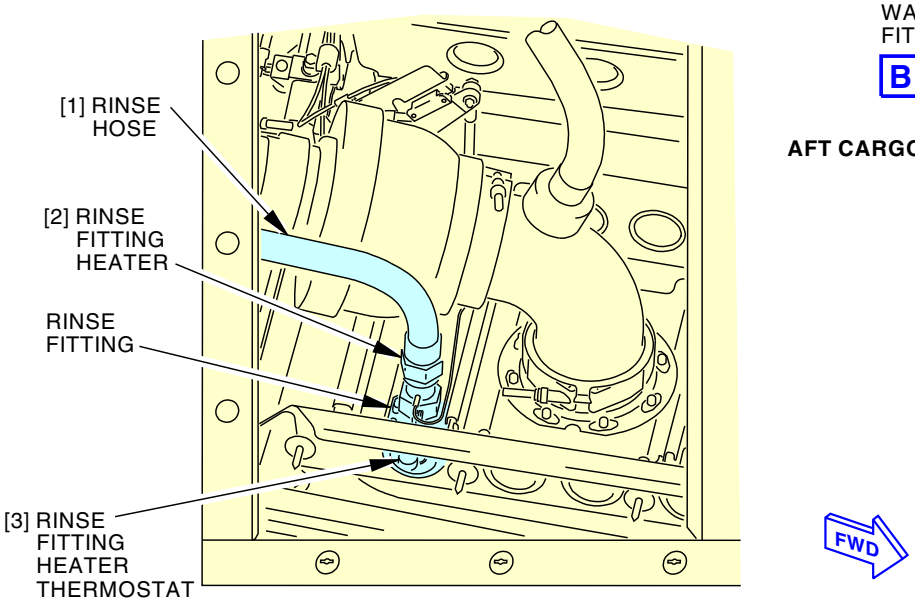

WASTE TANK RINSE FITTING ASSEMBLY
(INTERNAL VIEW)

B

G22184 S0006573231_V2

Waste Tank Rinse Fitting Heater Installation
Figure 401/30-71-04-990-801

ECCN 9E991 BOEING PROPRIETARY - See title page for details

TASK 30-71-04-400-801

3. Waste Tank Rinse Fitting Heater Installation

(Figure 401)

A. General

(1) This task gives instructions to install the Waste Tank Rinse Fitting Heater.

B. References

Reference	Title
12-17-01-610-801	Waste Tank Servicing (P/B 301)
25-52-20-400-801	Waste Tank Enclosure Panel - Installation (P/B 401)

C. Consumable Materials

Reference	Description	Specification
A00870	Adhesive - Urethane Adhesive for Bonding, 2 Part, Room Temp Cure (for automatic blending)	BMS5-105 Type II
B00083	Solvent - VM&P Naphthas	TT-N-95 Type II, ASTM D-3735 Type III
G01012	Compound - Carbon Dioxide, Solid (Dry Ice - Any Commercial Grade)	
G02319	Spray - Freeze - Miller-Stephenson MS-242N	
G02320	Ice - Crushed	

D. Location Zones

Zone	Area
143	Area Below Aft Cargo Compartment - Left

E. Access Panels

Number	Name/Location
146AR	Water Service Door
822	Aft Cargo Door

F. Waste Tank Rinse Fitting Heater Installation

SUBTASK 30-71-04-420-001

(1) Install the rinse fitting heater [2] on the service panel rinse fitting.

(a) Torque the rinse fitting heater [2] to 300 in-lb (34 N·m) to 350 in-lb (40 N·m).

SUBTASK 30-71-04-160-001

(2) Prepare the pan surface for attaching the rinse fitting heater thermostat [3].

(a) Remove all remaining adhesive.

(b) Wipe the pan surface with solvent, B00083.

SUBTASK 30-71-04-390-001

(3) Install the rinse rinse fitting heater thermostat [3] to the pan surface.

NOTE: Make sure that you do not install the rinse fitting heater thermostat on a rivet or other fastener.

(a) If the temperature is less than 65°F (18°C), heat the pan surface.

NOTE: At 65°F (18°C), the handling time for the adhesive is 3 hours, full cure time is 24 hours. At 140°F (60°C)(maximum), the handling time is 20 minutes, full cure time is 2 hours.

ECCN 9E991 BOEING PROPRIETARY - See title page for details

(b) Attach the rinse fitting heater thermostat [3] to the pan surface with adhesive, A00870, any class.

SUBTASK 30-71-04-420-002

(4) Attach the rinse hose [1] to the rinse fitting heater [2].

(a) Torque the rinse hose connect to 300 in-lb (34 N·m) to 350 in-lb (40 N·m).

SUBTASK 30-71-04-420-003

CAUTION

AVOID KINKING OR SHARPLY BENDING HARDWIRE LEAD AS DAMAGE TO TRANSDUCER AND LEAD CAN OCCUR.

(5) Attach splices to the rinse fitting heater [2] wiring.

SUBTASK 30-71-04-860-001

(6) Remove the safety tag and close this circuit breaker:

CAPT Electrical System Panel, P18-3

Row	Col	Number	Name
D	18	C01463	WASTE/WTR LINE HEATERS

G. Waste Tank Rinse Fitting Heater Installation Test

SUBTASK 30-71-04-610-002

(1) Cool the rinse fitting heater thermostat with ice, G02320, MS-242N spray, G02319, or compound, G01012.

SUBTASK 30-71-04-610-003

(2) Make sure that the rinse fitting heater [2] becomes warm.

SUBTASK 30-71-04-170-001

(3) Fill the waste tank with 30 gal (114 l) to 40 gal (151 l) of water.

SUBTASK 30-71-04-790-001

(4) Examine the rinse fitting assembly and the connections for leakage.

H. Put the Airplane Back to Its Usual Condition

SUBTASK 30-71-04-610-004

(1) Do this task: Waste Tank Servicing, TASK 12-17-01-610-801.

SUBTASK 30-71-04-410-001

WARNING

SEAL THE CARGO COMPARTMENT WITH THE LINING. OBEY THE INSTRUCTIONS IN THE SPECIFIED PROCEDURE WHEN YOU INSTALL THE LINING. IF YOU INSTALL THE LINING INCORRECTLY, THE SMOKE CAN GET INTO THE PASSENGER COMPARTMENT DURING A FIRE.

(2) Do this task: Waste Tank Enclosure Panel - Installation, TASK 25-52-20-400-801.

SUBTASK 30-71-04-410-002

(3) Close this access door:

Number	Name/Location
822	Aft Cargo Door

ECCN 9E991 BOEING PROPRIETARY - See title page for details

SUBTASK 30-71-04-410-003

(4) Close this access door:

Number	Name/Location
146AR	Water Service Door

END OF TASK

ECCN 9E991 BOEING PROPRIETARY - See title page for details

DRAIN MAST HEATERS - REMOVAL/INSTALLATION

1. General

A. This procedure consists of task references to remove and install the drain masts.

(1) The drain mast heaters are built into the drain masts.

(2) If a heater fails the sensor must be replaced.

TASK 30-71-05-900-801

2. Drain Mast Heater Replacement

A. References

Reference	Title
38-31-01-000-801	Forward Drain Mast Removal (P/B 401)
38-31-01-000-802	Aft Drain Mast Removal (P/B 401)
38-31-01-400-801	Forward Drain Mast Installation (P/B 401)
38-31-01-400-802	Aft Drain Mast - Installation (P/B 401)

B. Location Zones

Zone	Area
100	Lower Half of Fuselage

C. Drain Mast Heater Replacement

SUBTASK 30-71-05-900-001

(1) To replace a forward drain mast:

These are the tasks:

Forward Drain Mast Removal, TASK 38-31-01-000-801,

Forward Drain Mast Installation, TASK 38-31-01-400-801.

SUBTASK 30-71-05-900-002

(2) To replace the aft drain mast:

These are the tasks:

Aft Drain Mast Removal, TASK 38-31-01-000-802,

Aft Drain Mast - Installation, TASK 38-31-01-400-802.

END OF TASK

ECCN 9E991 BOEING PROPRIETARY - See title page for details

HEATED POTABLE WATER HOSES - REMOVAL/INSTALLATION

1. General

A. This procedure has these tasks:

(1) A removal of the heated potable water hose

(2) An installation of the heated potable water hose.

TASK 30-71-06-000-801

2. Heated Potable Water Hose Removal

(Figure 401)

A. General

(1) This task gives instructions to remove the Heated Potable Water Hose.

(2) The procedures to remove the hoses are similar. Access to the hoses is either through the aft cargo compartment or through the floor near the aft lavatory.

B. References

Reference	Title
20-10-52-000-801	Flexible Hose Removal (P/B 401)
25-27-15-000-801	Carpet Removal (P/B 401)
25-27-21-000-801	Entry and Service Area Floor Covering - Removal (P/B 401)
25-52-06-000-801	Cargo Compartment Sidewall Lining - Removal (P/B 401)
25-52-10-000-801	Cargo Floor Panel - Removal (P/B 401)
25-52-19-000-801	Aft Cargo Compartment Aft Bulkhead Liner - Removal (P/B 401)
38-42-00-800-801	Potable Water System - Deactivation (P/B 201)
SSM 30-71-11	System Schematics Manual
WDM 30-71-11	Wiring Diagram Manual

C. Location Zones

Zone	Area
141	Aft Cargo Compartment - Left
142	Aft Cargo Compartment - Right
240	Subzone - Passenger Compartment - Body Station 663.75 to Body Station 1016.00

D. Access Panels

Number	Name/Location
822	Aft Cargo Door

E. Prepare for the Removal

SUBTASK 30-71-06-840-001

(1) Remove pressure from the potable water system, do this task: Potable Water System - Deactivation, TASK 38-42-00-800-801.

SUBTASK 30-71-06-860-001

(2) Open these circuit breakers and install safety tags:

CAPT Electrical System Panel, P18-3

Row	Col	Number	Name
D	18	C01463	WASTE/WTR LINE HEATERS
E	5	C00233	HEATERS DRAIN

ECCN 9E991 BOEING PROPRIETARY - See title page for details

(Continued)

CAPT Electrical System Panel, P18-3

Row	Col	Number	Name
E	18	C01473	HOSE HEATERS

SUBTASK 30-71-06-010-001

(3) Open this access panel:

Number	Name/Location
822	Aft Cargo Door

SUBTASK 30-71-06-010-002

(4) Get access to the applicable heated potable water hose.

(a) Determine the location of the heated water hoses (SSM 30-71-11).

(b) Identify access requirements (Figure 401).

(c) Do the applicable steps to get access the heated water hose:

1) Remove the cargo compartment floor panel, do this task: Cargo Floor Panel - Removal, TASK 25-52-10-000-801.

2) Remove the aft bulkhead liner, do this task: Aft Cargo Compartment Aft Bulkhead Liner - Removal, TASK 25-52-19-000-801.

3) Remove cargo compartment sidewall lining, do this task: Cargo Compartment Sidewall Lining - Removal, TASK 25-52-06-000-801.

4) Remove the carpet, do this task: Carpet Removal, TASK 25-27-15-000-801.

5) Remove the floor covering, do this task: Entry and Service Area Floor Covering - Removal, TASK 25-27-21-000-801.

F. Heated Potable Water Hose Removal

SUBTASK 30-71-06-020-001

(1) Disconnect the electrical connectors from the heated hose (WDM 30-71-11).

SUBTASK 30-71-06-020-002

(2) Disconnect the fittings on the heated potable water hose.

(a) Use a bucket to catch water which may be in the hose.

(b) Remove the flexible hoses (TASK 20-10-52-000-801).

——— END OF TASK ———

ECCN 9E991 BOEING PROPRIETARY - See title page for details

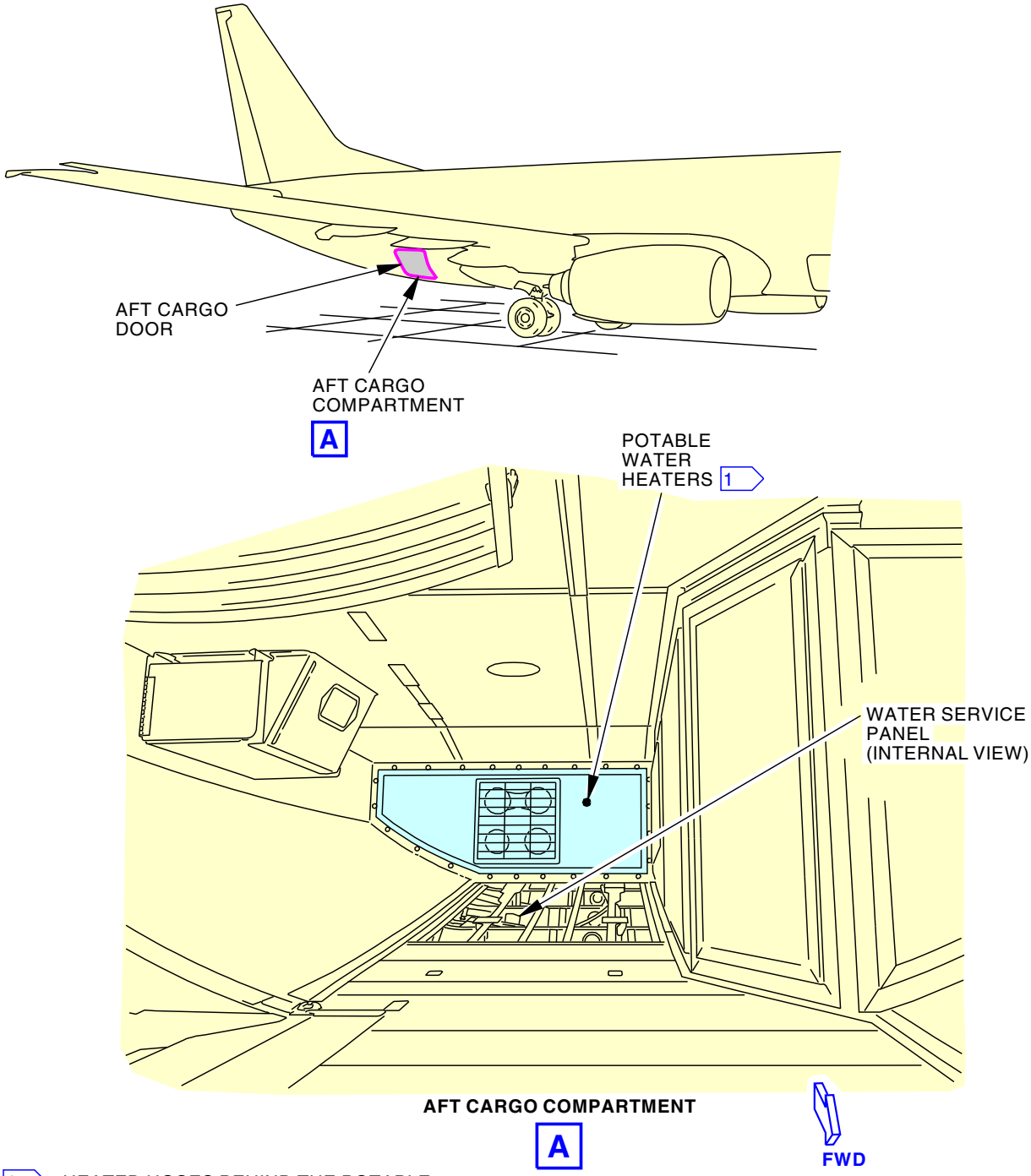

W01146 S0006573239_V2

Heated Potable Water Hoses Installation
Figure 401/30-71-06-990-801 (Sheet 1 of 2)

ECCN 9E991 BOEING PROPRIETARY - See title page for details

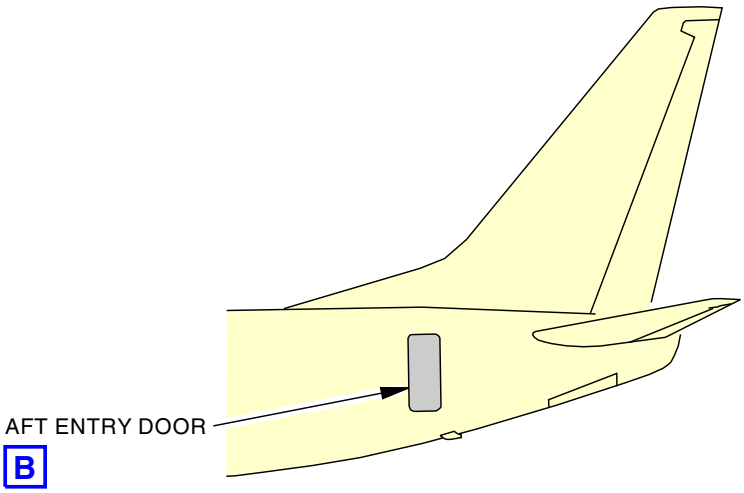

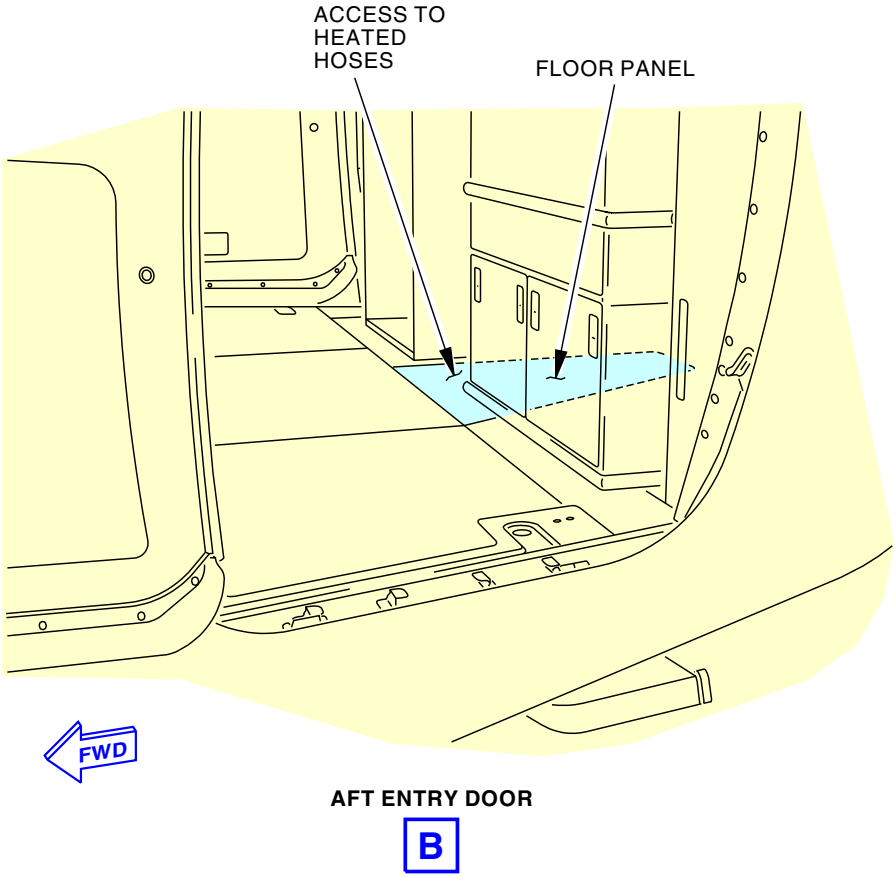

W01149 S0006573241_V2

Heated Potable Water Hoses Installation
Figure 401/30-71-06-990-801 (Sheet 2 of 2)

ECCN 9E991 BOEING PROPRIETARY - See title page for details

TASK 30-71-06-400-801

3. Heated Potable Water Hose Installation

(Figure 401)

A. General

(1) This task gives instructions to install the Heated Potable Water Hose.

(2) The installation of each heated potable water hose is similar.

B. References

Reference	Title
20-10-52-400-801	Flexible Hose Installation (P/B 401)
25-27-15-400-801	Carpet - Installation (P/B 401)
25-27-21-400-801	Entry and Service Area Floor Covering - Installation (P/B 401)
25-52-06-400-801	Cargo Compartment Sidewall Lining - Installation (P/B 401)
25-52-10-400-801	Cargo Floor Panel - Installation (P/B 401)
25-52-19-400-801	Aft Cargo Compartment Aft Bulkhead Liner - Installation (P/B 401)
38-10-00-600-801	Potable Water System - Disinfectant (P/B 201)
38-10-00-790-801	Potable Water System - Leak Test (P/B 201)

C. Tools/Equipment

NOTE: When more than one tool part number is listed under the same "Reference" number, the tools shown are alternates to each other within the same airplane series. Tool part numbers that are replaced or non-procurable are preceded by "Opt:", which stands for Optional.

Reference	Description
COM-1572	Thermometer - Infrared, Intrinsically Safe Part #: 568 EX Supplier: 89536 Part #: 568 EX/BR Supplier: 89536 Part #: 568 EX/CN Supplier: 89536 Part #: 568 EX/ETL Supplier: 89536 Opt Part #: DHS24XC-FM Supplier: 08086 Opt Part #: DHS24XF-FM Supplier: 08086 Opt Part #: EX-MP4 A Supplier: 3GT36 Opt Part #: IR-16L3 IS Supplier: 75037
COM-2531	Clamp-On- Current Meter Part #: 324 Supplier: 89536 Part #: 374 FC Supplier: 89536 Part #: LH41A Supplier: 0JV05 Opt Part #: 321 Supplier: 89536 Opt Part #: 322 Supplier: 89536 Opt Part #: 374 Supplier: 89536 Opt Part #: MODEL 33 Supplier: 89536 Opt Part #: MODEL 36 Supplier: 89536

D. Consumable Materials

Reference	Description	Specification
G01012	Compound - Carbon Dioxide, Solid (Dry Ice - Any Commercial Grade)	
G02319	Spray - Freeze - Miller-Stephenson MS-242N	
G02320	Ice - Crushed	

ECCN 9E991 BOEING PROPRIETARY - See title page for details

E. Location Zones

Zone	Area
141	Aft Cargo Compartment - Left
142	Aft Cargo Compartment - Right
240	Subzone - Passenger Compartment - Body Station 663.75 to Body Station 1016.00

F. Access Panels

Number	Name/Location
822	Aft Cargo Door

G. Heated Potable Water Hose Installation

SUBTASK 30-71-06-420-001

(1) Connect the heated potable water hose fittings.

(a) For the fill fitting, tighten the heated hose to 620 ±80 in-lb (70 ±9 N·m).

(b) For all other fittings, refer to the task: Flexible Hose Installation, TASK 20-10-52-400-801.

SUBTASK 30-71-06-420-002

(2) Connect the electrical connectors to the heated water hose.

H. Heated Potable Water Hose Installation Test

SUBTASK 30-71-06-790-001

(1) Do a test for leaks in the potable water hose (TASK 38-10-00-790-801).

SUBTASK 30-71-06-720-001

(2) Measure the temperature of the hose and surrounding area.

SUBTASK 30-71-06-860-003

(3) Remove the safety tags and close these circuit breakers:

CAPT Electrical System Panel, P18-3

Row	Col	Number	Name
D	18	C01463	WASTE/WTR LINE HEATERS
E	5	C00233	HEATERS DRAIN
E	18	C01473	HOSE HEATERS

SUBTASK 30-71-06-720-002

(4) Do this test of the heated hose:

(a) If the temperature in the area is higher than 45 degrees F (7 degrees C), then decrease the temperature of the thermostat.

NOTE: You can use MS-242N spray, G02319, ice, G02320, or compound, G01012 to decrease the temperature. Permit 3 to 5 minutes for the temperature of the thermostat to decrease before you check the temperature of the heated hose. The thermostat is in a bulge at the end of the hose.

(b) Make sure the hose heater is powered by either of these methods:

1) Use a Infrared Thermometer, COM-1572, or equivalent, to make sure the hose gets warm.

2) Use a clamp-on current meter, COM-2531,or equivalent, to make sure that the heater is drawing electrical current.

I. Put the Airplane Back to Its Usual Condition

SUBTASK 30-71-06-670-001

(1) Disinfect the potable water system (TASK 38-10-00-600-801).

ECCN 9E991 BOEING PROPRIETARY - See title page for details

SUBTASK 30-71-06-410-001

(2) Replace or close the panels or doors used to access the heated hose.

WARNING	SEAL THE CARGO COMPARTMENT WITH THE LINING. OBEY THE INSTRUCTIONS IN THE SPECIFIED PROCEDURE WHEN YOU INSTALL THE LINING. IF YOU INSTALL THE LINING INCORRECTLY, THE SMOKE CAN GO INTO THE PASSENGER COMPARTMENT DURING A FIRE. THIS CAN CAUSE INJURY TO PERSONNEL.

(a) Re-install the cargo compartment sidewall lining (TASK 25-52-06-400-801).

(b) Re-install the cargo compartment floor panel (TASK 25-52-10-400-801).

(c) Re-install the aft bulkhead liner (TASK 25-52-19-400-801).

(d) Re-install the floor covering (TASK 25-27-21-400-801).

(e) Re-install the carpet (TASK 25-27-15-400-801).

(f) Close this access door:

Number	Name/Location
822	Aft Cargo Door

END OF TASK

ECCN 9E991 BOEING PROPRIETARY - See title page for details

ICE DETECTION SYSTEM - MAINTENANCE PRACTICES

1. General

A. This procedure has these tasks:

(1) Ice detection system - deactivation.

(2) Ice detection system - activation.

TASK 30-81-00-040-801

2. Ice Detection System - Deactivation

A. General

(1) This task will deactivate the ice detection system.

B. Location Zones

Zone	Area
113	Area Above and Outboard of Nose Landing Gear Wheel Well - Left
211	Flight Compartment - Left
212	Flight Compartment - Right

C. Procedure

SUBTASK 30-81-00-210-001

> **WARNING** PUT ON A HEAT-RESISTANT GLOVE BEFORE YOU OPERATE THE ICE DETECTOR. THE ICE DETECTOR QUICKLY BECOMES VERY HOT AND CAN BURN YOU.

(1) Make sure that all protective caps and covers are removed from the ice detector probe.

SUBTASK 30-81-00-020-001

(2) Open this circuit breaker and install safety tag:

CAPT Electrical System Panel, P18-3

Row	Col	Number	Name
B	5	C01250	ICE DETECTOR POWER

D. Ice Detection System - Tryout

NOTE: This tryout is to make sure that the power to the ice detection system is in zero energy state.

SUBTASK 30-81-00-210-003

(1) Make sure that the ICE DETECTOR light on the P5-11 panel is on.

END OF TASK

ECCN 9E991 BOEING PROPRIETARY - See title page for details

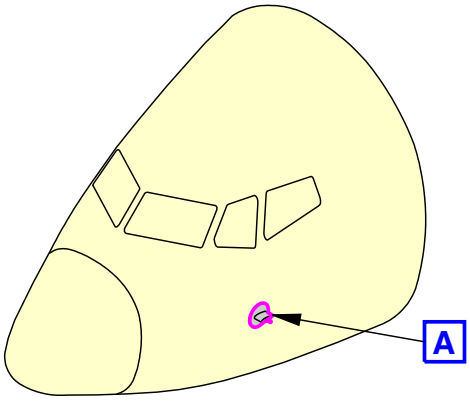

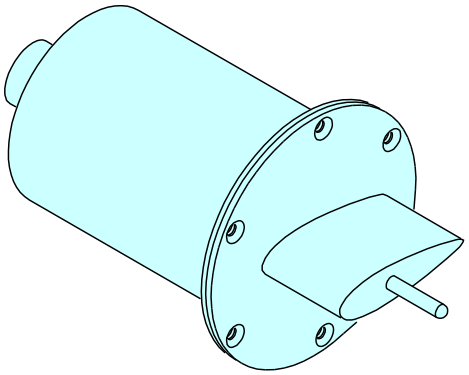

ICE DETECTOR

A

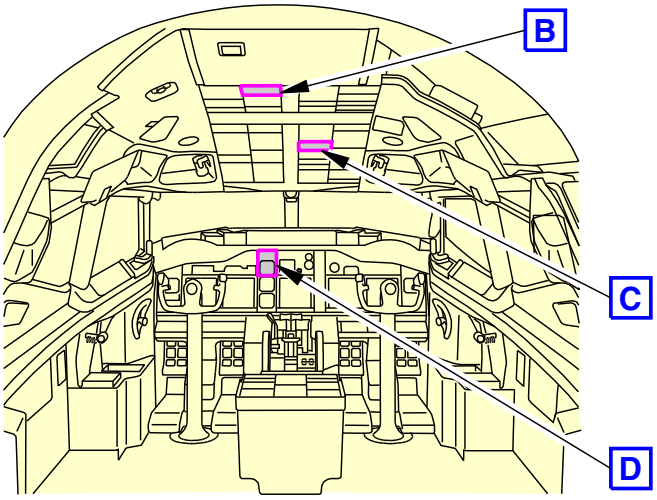

FLIGHT COMPARTMENT

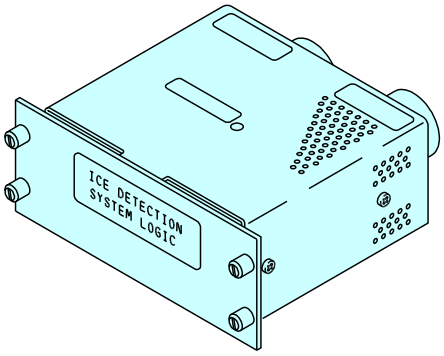

ICE DETECTION MODULE (P5)

B

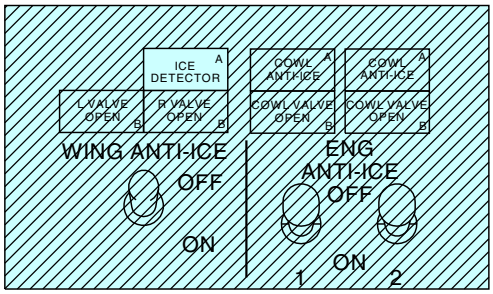

ANTI-ICE PANEL (P5)

C

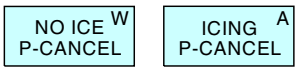

P1-3 PANEL

D

2365740 S0000541523_V2

Ice Detection System
Figure 201/30-81-00-990-801

ECCN 9E991 BOEING PROPRIETARY - See title page for details

TASK 30-81-00-440-801

3. Ice Detection System - Activation

(Figure 201)

A. General

(1) This task will activate the ice detection system.

B. Location Zones

Zone	Area
113	Area Above and Outboard of Nose Landing Gear Wheel Well - Left
211	Flight Compartment - Left
212	Flight Compartment - Right

C. Procedure

SUBTASK 30-81-00-210-004

> **WARNING** PUT ON A HEAT-RESISTANT GLOVE BEFORE YOU OPERATE THE ICE DETECTOR. THE ICE DETECTOR QUICKLY BECOMES VERY HOT AND CAN BURN YOU.

(1) Make sure that all protective caps and covers are removed from the ice detector probe.

SUBTASK 30-81-00-420-001

(2) Remove the safety tag and close this circuit breaker:

CAPT Electrical System Panel, P18-3

Row	Col	Number	Name
B	5	C01250	ICE DETECTOR POWER

END OF TASK

ECCN 9E991 BOEING PROPRIETARY - See title page for details

1. General

A. This procedure has this task:

(1) Ice Detection System - Operational Test.

TASK 30-81-00-710-801

2. Ice Detection System - Operational Test

A. General

(1) This test makes sure that the ice detection system operates correctly.

(2) In this test, it is necessary to apply a coolant to the sensing element of the ice detector probe. The sensing element is located at the outer tip of the probe.

B. Location Zones

Zone	Area
113	Area Above and Outboard of Nose Landing Gear Wheel Well - Left
211	Flight Compartment - Left
212	Flight Compartment - Right

C. Ice Detection System Operational Test

SUBTASK 30-81-00-010-001

(1) Open this circuit breaker and install safety tag:

F/O Electrical System Panel, P6-3

Row	Col	Number	Name
C	16	C01356	LANDING GEAR AIR/GND SYS 1

SUBTASK 30-81-00-710-001

WARNING DO NOT TOUCH THE ICE DETECTOR PROBE WITH YOUR HAND. THE ICE DETECTOR PROBE QUICKLY BECOMES VERY HOT. IF YOU DO NOT OBEY, INJURY TO PERSONNEL CAN OCCUR.

(2) Alternately apply coolant and then water to the sensing element of the ice detector probe until the ICING P-CANCEL light, on the P1-3 captain instrument panel, comes on.

(a) Make sure that the ICING P-CANCEL light stays on for up to 120 seconds and then goes off.

NOTE: If there is too much ice on the probe, it can cause the ICING light to stay on for a longer period of time.

(b) Make sure that the NO ICE P-CANCEL light, on the P1-3 captain instrument panel, comes on when the ICING P-CANCEL light goes off.

(c) Push the NO ICE P-CANCEL light.

1) Make sure that the NO ICE P-CANCEL light goes off immediately.

SUBTASK 30-81-00-710-002

(3) Alternately apply coolant and then water to the sensing element of the ice detector probe until the ICING P-CANCEL light, on the P1-3 captain instrument panel, comes on.

(a) Make sure that the ICING P-CANCEL light comes on.

1) Start a stopwatch when the ICING P-CANCEL light comes on.

ECCN 9E991 BOEING PROPRIETARY - See title page for details

(b) Push the ICING P-CANCEL light.

1) Make sure that the ICING P-CANCEL light goes off immediately.

2) Make sure that the NO ICE P-CANCEL light comes on.

NOTE: The NO ICE light may have a delay of up to 120 seconds.

NOTE: If there is too much ice on the probe, the NO ICE light will not come on for a longer period of time.

(c) Push the NO ICE P-CANCEL light.

1) Make sure that the NO ICE P-CANCEL light goes off immediately.

2) Make sure that the ICING P-CANCEL light is off.

3) Make sure that the MASTER CAUTION and ANTI-ICE lights, on the P7 glareshield panel, are off.

SUBTASK 30-81-00-860-002

(4) Do a check of the AC power failure indication:

(a) Open this circuit breaker and install safety tag:

CAPT Electrical System Panel, P18-3

Row	Col	Number	Name
B	5	C01250	ICE DETECTOR POWER

(b) Make sure that the ICE DETECTOR light, on the P5-11 engine and wing anti-ice panel, comes on.

(c) Make sure that the MASTER CAUTION and ANTI-ICE lights, on the P7 glareshield panel, come on.

(d) Remove the safety tag and close this circuit breaker:

CAPT Electrical System Panel, P18-3

Row	Col	Number	Name
B	5	C01250	ICE DETECTOR POWER

(e) Make sure that the ICE DETECTOR light goes off.

(f) Make sure that the MASTER CAUTION and ANTI-ICE lights, on the P7 glareshield panel, go off.

SUBTASK 30-81-00-710-003

(5) Do a check of the DC power failure indication:

(a) Open these circuit breakers and install safety tags:

CAPT Electrical System Panel, P18-3

Row	Col	Number	Name
A	6	C00148	ANTI-ICE & RAIN ENG 1 & WING CONT
B	6	C00149	ANTI-ICE & RAIN ENGINE 2 CONTROL

(b) Make sure that the ICE DETECTOR light comes on.

(c) Make sure that the MASTER CAUTION and the ANTI-ICE lights, on the P7 glareshield panel, come on.

ECCN 9E991 BOEING PROPRIETARY - See title page for details

(d) Open this circuit breaker:

CAPT Electrical System Panel, P18-3

Row	Col	Number	Name
B	5	C01250	ICE DETECTOR POWER

(e) Remove the safety tags and close these circuit breakers:

CAPT Electrical System Panel, P18-3

Row	Col	Number	Name
A	6	C00148	ANTI-ICE & RAIN ENG 1 & WING CONT
B	6	C00149	ANTI-ICE & RAIN ENGINE 2 CONTROL

Close this circuit breaker:

CAPT Electrical System Panel, P18-3

Row	Col	Number	Name
B	5	C01250	ICE DETECTOR POWER

(f) Make sure that the ICE DETECTOR light, MASTER CAUTION, and ANTI-ICE lights, on the P7 glareshield panel, go off.

SUBTASK 30-81-00-410-001

(6) Remove the safety tag and close this circuit breaker:

F/O Electrical System Panel, P6-3

Row	Col	Number	Name
C	16	C01356	LANDING GEAR AIR/GND SYS 1

END OF TASK

ECCN 9E991 BOEING PROPRIETARY - See title page for details

ICE DETECTOR PROBE - REMOVAL/INSTALLATION

1. General

A. This procedure has these tasks:

(1) Ice Detector Probe Removal

(2) Ice Detector Probe Installation

TASK 30-81-01-000-801

2. Ice Detector Probe Removal

(Figure 401)

A. General

(1) This task gives instructions to remove the Ice Detector Probe.

B. Tools/Equipment

NOTE: When more than one tool part number is listed under the same "Reference" number, the tools shown are alternates to each other within the same airplane series. Tool part numbers that are replaced or non-procurable are preceded by "Opt:", which stands for Optional.

Reference	Description
COM-2481	Sealant Removal Tool (Meets BSS7384 Requirements) Part #: 1-6390-A Supplier: 63318 Part #: 10810 Supplier: $0855 Part #: 10811 Supplier: $0855 Part #: 10812 Supplier: $0855 Part #: 234350 Supplier: 5HCF1 Part #: 235072 Supplier: 5HCF1 Part #: 235073 Supplier: 5HCF1 Part #: 235074 Supplier: 5HCF1 Part #: 235075 Supplier: 5HCF1 Part #: 235076 Supplier: 5HCF1 Part #: 311/03 Supplier: F6892 Part #: 311/14 Supplier: F6892 Part #: 311/25 Supplier: F6892 Part #: 311/37 Supplier: F6892 Part #: AS1 Supplier: $1351 Part #: AS2 Supplier: $1351 Part #: AS3 Supplier: $1351 Part #: DAD5013 Supplier: 7RKH2 Part #: DFD5019 Supplier: 7RKH2 Part #: JNT411B60 Supplier: 3DN12 Part #: JNT411B90 Supplier: 3DN12 Part #: PT6529-S Supplier: 81205 Part #: SCD5019 Supplier: 7RKH2 Part #: ST982LF-9 Supplier: 81205 Part #: TS1275-4 Supplier: 22975

C. Consumable Materials

Reference	Description	Specification
A00247	Sealant - Pressure And Environmental - Chromate Type	BMS5-95

ECCN 9E991 BOEING PROPRIETARY - See title page for details

D. Location Zones

Zone	Area
113	Area Above and Outboard of Nose Landing Gear Wheel Well - Left
211	Flight Compartment - Left
212	Flight Compartment - Right

E. Prepare for the Removal

SUBTASK 30-81-01-860-001

(1) Open this circuit breaker and install safety tag:

CAPT Electrical System Panel, P18-3

Row	Col	Number	Name
B	5	C01250	ICE DETECTOR POWER

SUBTASK 30-81-01-020-001

WARNING

BEFORE YOU TOUCH THE ICE DETECTOR PROBE, MAKE SURE THAT IT IS NOT HOT. THE PROBE CAN BURN YOU IF YOU TOUCH IT WHEN IT IS HOT.

(2) Use a sealant removal tool, COM-2481, to remove the sealant, A00247, from the gap between the airplane skin and the ice detector probe [1].

F. Ice Detector Probe Removal

SUBTASK 30-81-01-020-002

(1) Remove the ice detector probe [1]:

(a) Remove the mounting bolts [2].

(b) Hold the strut of the ice detector probe [1] and move the ice detector probe [1] from side to side to loosen the gasket [4].

(c) Carefully pull the ice detector probe [1] out from the airplane until you can touch the electrical connector [3] on the back of the ice detector probe [1].

(d) Remove the ice detector probe [1].

(e) Attach the electrical connector [3] on the wire bundle to hold it outside the opening in the airplane skin.

(f) Put a protective cap on the electrical connector [3].

(g) Remove the gasket [4] and discard it.

——— END OF TASK ———

ECCN 9E991 BOEING PROPRIETARY - See title page for details

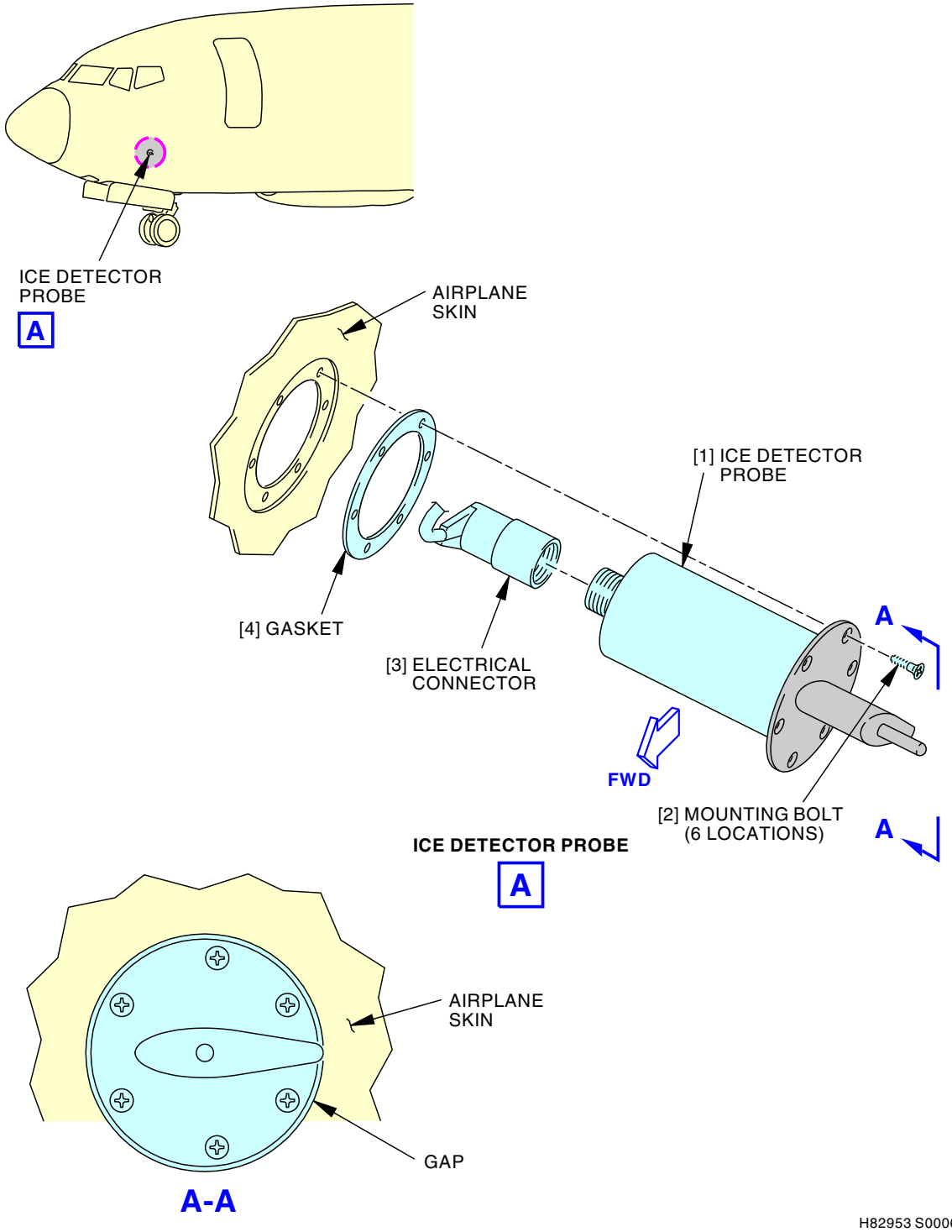

H82953 S0006573263_V2

Ice Detector Probe Installation
Figure 401/30-81-01-990-801

ECCN 9E991 BOEING PROPRIETARY - See title page for details

TASK 30-81-01-400-801

3. Ice Detector Probe Installation

A. General

(1) This task gives instructions to install the Ice Detector Probe.

B. References

Reference	Title
30-81-00-710-801	Ice Detection System - Operational Test (P/B 501)

C. Consumable Materials

Reference	Description	Specification
A00247	Sealant - Pressure And Environmental - Chromate Type	BMS5-95
B00402	Cleaner - Aerospace Equipment	MIL-PRF-87937
G00034	Cotton Wiper - Process Cleaning Absorbent Wiper (Cheesecloth, Gauze)	AMS3819 Class 1 Grade A or B Form 1 (Supersede BMS15-5 CL A)

D. Location Zones

Zone	Area
113	Area Above and Outboard of Nose Landing Gear Wheel Well - Left
211	Flight Compartment - Left
212	Flight Compartment - Right

E. Ice Detector Probe Installation

SUBTASK 30-81-01-420-001

(1) Clean the opening in the airplane skin with cotton wiper, G00034, and cleaner, B00402.

SUBTASK 30-81-01-420-002

(2) Install the ice detector probe [1]:

(a) Put the new gasket [4] into the opening.

(b) Connect the electrical connector [3] to the ice detector probe [1].

(c) Put the ice detector probe [1] into the opening.

(d) Install the mounting bolts [2] and tighten them to 18.0 in-lb (2.0 N·m) to 25.0 in-lb (2.8 N·m).

F. Ice Detector Probe Installation Test

SUBTASK 30-81-01-860-002

(1) Remove the safety tag and close this circuit breaker:

CAPT Electrical System Panel, P18-3

Row	Col	Number	Name
B	5	C01250	ICE DETECTOR POWER

SUBTASK 30-81-01-710-001

(2) Do this task: Ice Detection System - Operational Test, TASK 30-81-00-710-801.

SUBTASK 30-81-01-390-001

(3) Fill all gaps between the ice detector probe [1] and the fuselage with sealant, A00247.

ECCN 9E991 BOEING PROPRIETARY - See title page for details

(a) Make a smooth surface on the sealant, A00247.

END OF TASK

ECCN 9E991 BOEING PROPRIETARY - See title page for details

ICE DETECTOR SYSTEM LOGIC MODULE - REMOVAL/INSTALLATION

1. General

A. This procedure has these tasks:

(1) Ice Detector System Logic Module Removal

(2) Ice Detector System Logic Module Installation

TASK 30-81-02-000-801

2. Ice Detector System Logic Module Removal

(Figure 401)

A. General

(1) This task gives instructions to remove the Ice Detector System Logic Module.

B. Location Zones

Zone	Area
211	Flight Compartment - Left
212	Flight Compartment - Right

C. Prepare for the Removal

SUBTASK 30-81-02-860-001

(1) Open these circuit breakers and install safety tags:

CAPT Electrical System Panel, P18-3

Row	Col	Number	Name
A	6	C00148	ANTI-ICE & RAIN ENG 1 & WING CONT
B	6	C00149	ANTI-ICE & RAIN ENGINE 2 CONTROL

D. Ice Detector System Logic Module Removal

SUBTASK 30-81-02-020-001

(1) Remove the ice detector logic module.

(a) Loosen the 4 fasteners which attach the ice detector logic module [1] to the P5 panel.

(b) Pull the ice detector logic module [1] out from the P5 panel.

(c) Disconnect the 2 electrical connectors from the ice detector logic module [1].

END OF TASK

ECCN 9E991 BOEING PROPRIETARY - See title page for details

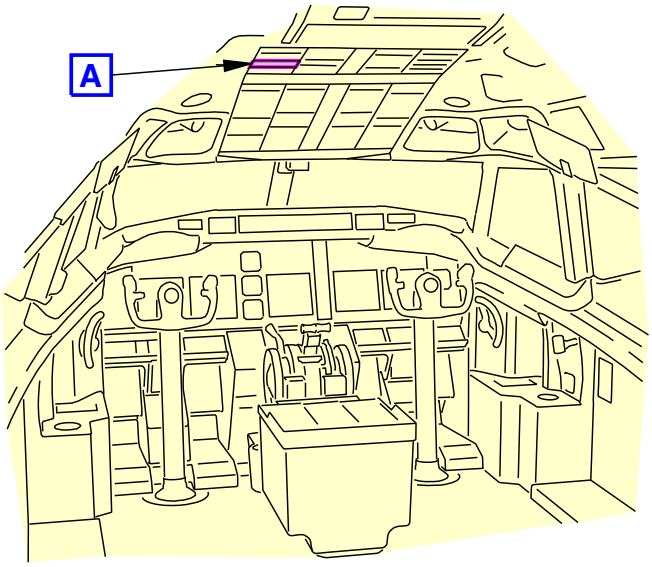

FLIGHT COMPARTMENT

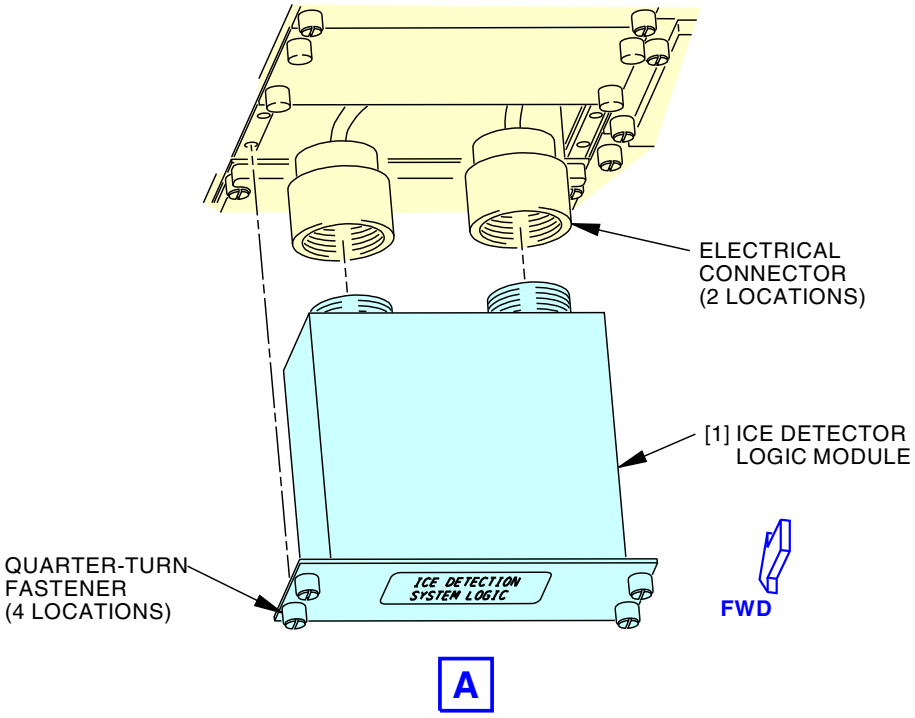

H82877 S0006573268_V2

Ice Detector Logic Module Installation
Figure 401/30-81-02-990-801

ECCN 9E991 BOEING PROPRIETARY - See title page for details

TASK 30-81-02-400-801

3. Ice Detector System Logic Module Installation

(Figure 401)

A. General

(1) This task gives instructions to install the Ice Detector System Logic Module.

B. References

Reference	Title
30-81-00-710-801	Ice Detection System - Operational Test (P/B 501)

C. Location Zones

Zone	Area
211	Flight Compartment - Left
212	Flight Compartment - Right

D. Prepare for the Installation

SUBTASK 30-81-02-860-003

(1) Make sure that these circuit breakers are open and have safety tags:

CAPT Electrical System Panel, P18-3

Row	Col	Number	Name
A	6	C00148	ANTI-ICE & RAIN ENG 1 & WING CONT
B	6	C00149	ANTI-ICE & RAIN ENGINE 2 CONTROL

E. Procedure

SUBTASK 30-81-02-420-001

(1) Install the ice detector logic module.

(a) Connect the 2 electrical connectors to the ice detector logic module [1].

(b) Install the ice detector logic module [1] in the P5 panel.

(c) Attach the ice detector logic module [1] to the P5 panel with its 4 fasteners.

SUBTASK 30-81-02-860-002

(2) Remove the safety tags and close these circuit breakers:

CAPT Electrical System Panel, P18-3

Row	Col	Number	Name
A	6	C00148	ANTI-ICE & RAIN ENG 1 & WING CONT
B	6	C00149	ANTI-ICE & RAIN ENGINE 2 CONTROL

SUBTASK 30-81-02-710-001

(3) Do this task: Ice Detection System - Operational Test, TASK 30-81-00-710-801.

END OF TASK

ECCN 9E991 BOEING PROPRIETARY - See title page for details