Pixel-Anchor: A Fast Oriented Scene Text Detector with Combined Networks

Yuan Li, Yuanjie Yu, Zefeng Li, Yangkun Lin, Meifang Xu, Jiwei Li, Xi Zhou

Cloudwalk Technology, Shanghai, China.

{liyuan, yuyuanjie, lizefeng, linyangkun, xumeifang, lijiwei, zhouxi}@cloudwalk.cn

马栋梁

2018-12-10

Introduction

1.Segmentation + detection

2.FPN + ASPP as encoder-decoder structure in the semantic segmentation

3.Propose a novel Adaptive Predictor Layer in the SSD

4. on the ICDAR 2015 dataset, the proposed algorithm achieves an F-score of 0.8768 at 10 FPS for 960×1728 resolution images

Introduction

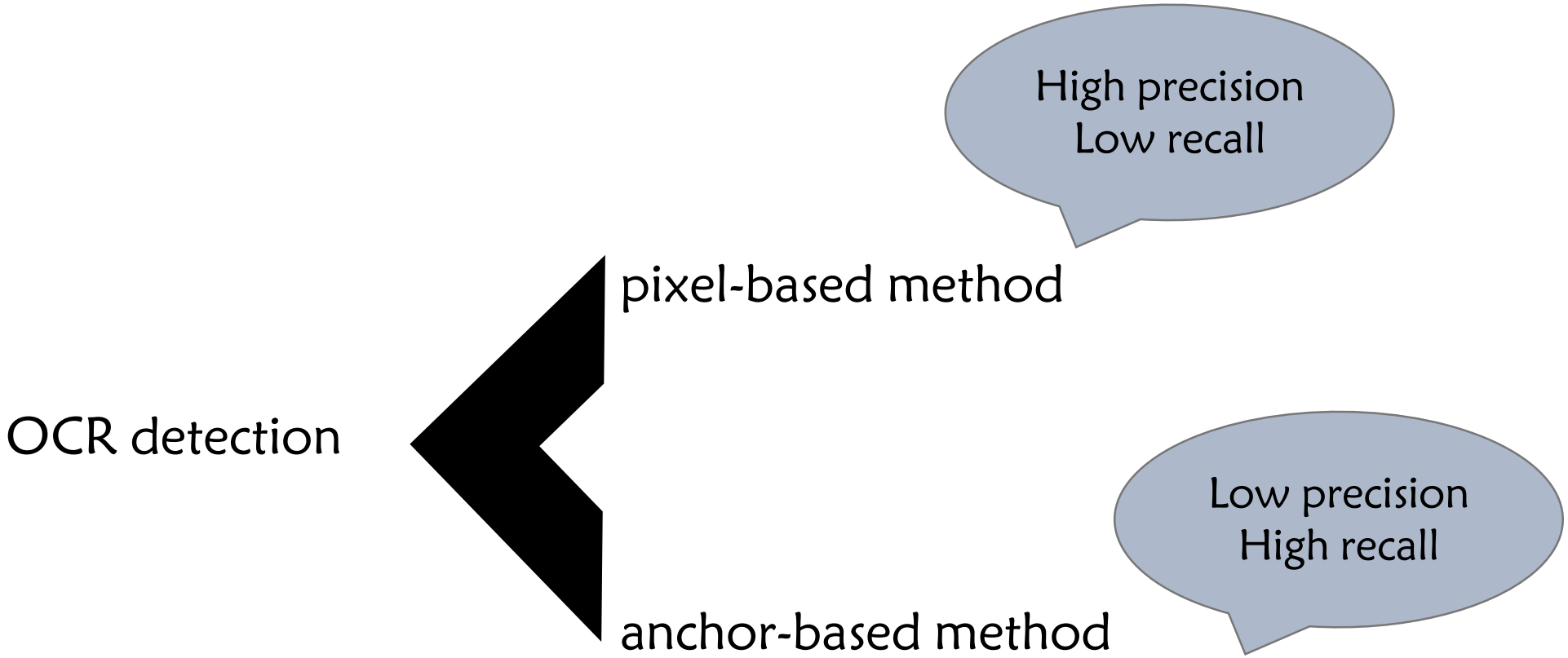

Introduction-pixel-based method

Model:

EAST、Pixel-Link、PSENet ➔ U-net + FPN

Detect:

predicts each positive text pixel + local-aware NMS

Drawbacks:

1.the receptive field limitation, which perform poorly in detecting very long texts.

2.the ss predict the foreground/background score map on the 1/4 or even smaller feature maps. Since the ground truth labels have been shrunk so much, detect small texts and distinguish close small texts Laboriously.

Introduction-anchor-based method

Model:

Textboxes

Textboxes ++

RRPN

R2CNN

In addition to "Anchor Matching Dilemma", Textboxes++ also suffers from receptive field limitation. The receptive field of 1×5 or 3×5 convolutional filter is not enough to detect text lines running across the images, even the aspect ratio of anchors is enlarged to 1:10, it cannot match the long Chinese text lines whose aspect ratio usually exceeds 1:30.

Compared with the pixel-based method, the anchor-based method directly learns anchor-level abstract features to describe text instances, not pixel-level stroke features as the pixel-based method does. The anchor-level abstract features have to face more diversity, as a result, it usually has more false positives. But also from the anchor-level abstract feature, the anchor-based method is more robust to text size, and is efficient to detect small texts. According to our experiments, when using small images, the anchor-based method usually has higher recall scores than the pixel-based method.

Architecture

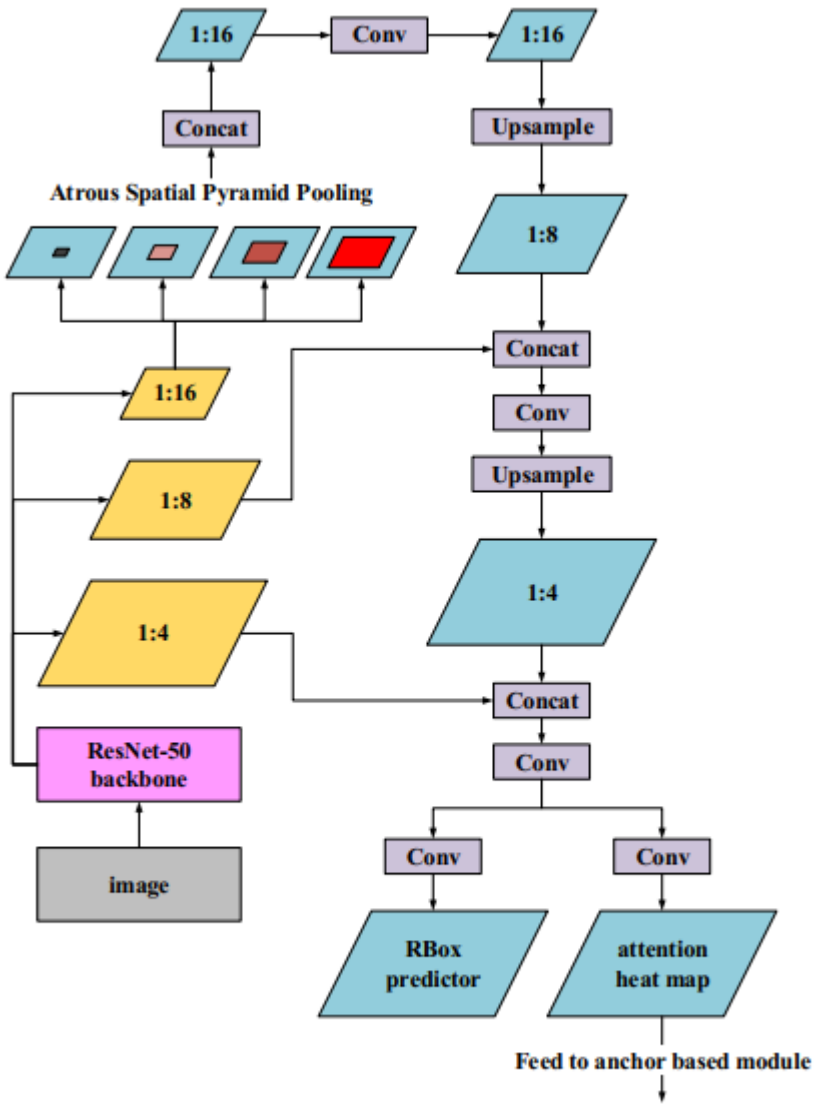

Figure 5: The architecture of the pixel-based module.

and modify ASPP with dilation rate of {3, 6, 9, 12, 15, 18} instead of {6, 12, 18} in DeepLabv3+ [7] for obtaining a finer receptive field. At the decoding stage, the encoder features are first bilinearly upsampled by a factor of 2 and

orientation of the text bounding box. The attention heat map contains one channel indicating the probability of each pixel being a positive text, and will be fed into the anchor-based module.

Architecture

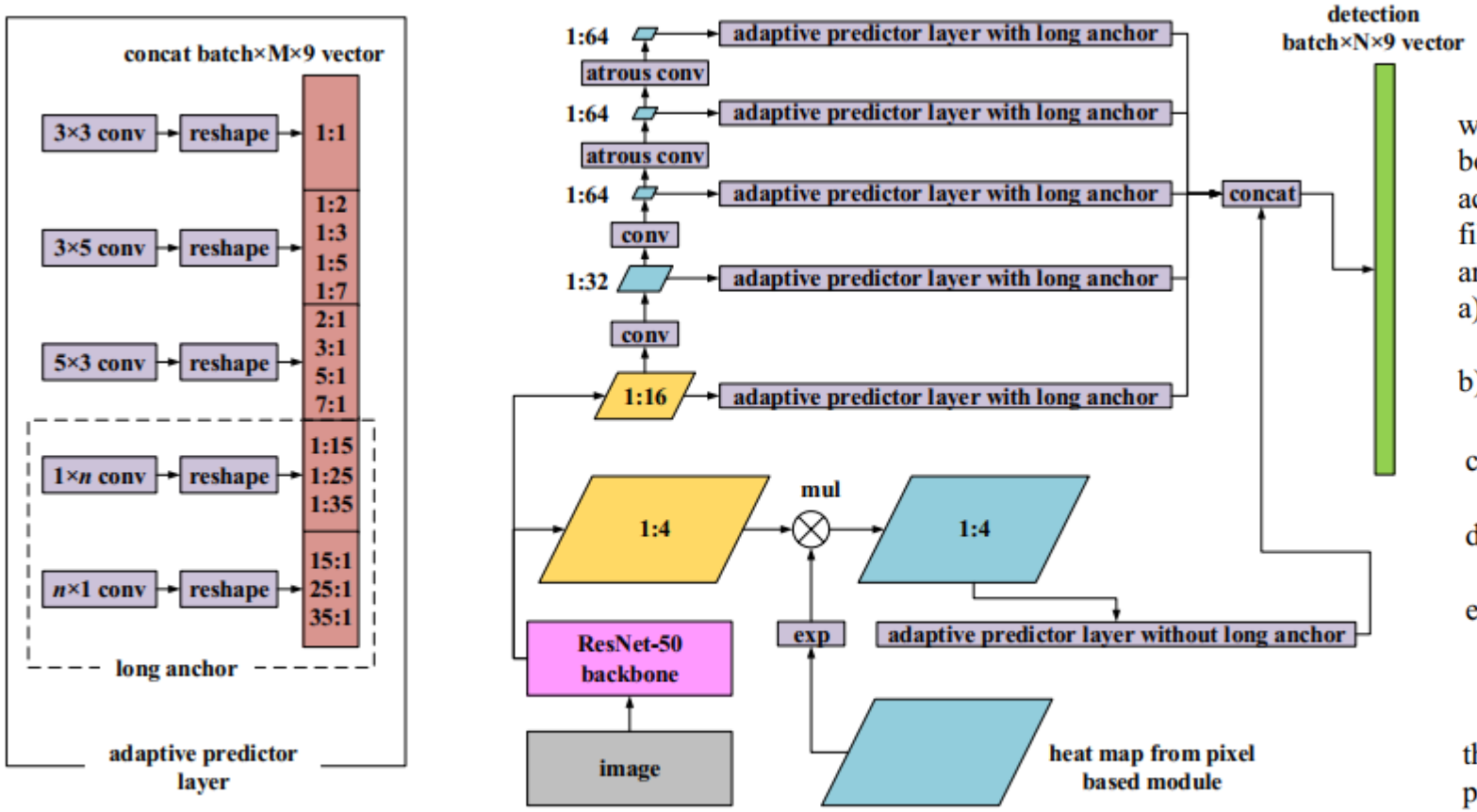

Figure 6: The architecture of anchor based module.

Further, we propose "Adaptive Predictor Layer" (APL), which is appended to each feature map to get the final text box predictions. In the APL, the anchors are grouped according to their aspect ratios, and different convolutional filters are adopted in each group. Specifically, the anchors are grouped into 5 categories:

a) Square anchors: aspect ratio = 1:1, convolutional filter size 3×3.

b) Medium horizontal anchors: aspect ratios = {1:2, 1:3, 1:5, 1:7}, convolutional filter size 3×5.

c) Medium vertical anchors: aspect ratios = {2:1, 3:1, 5:1, 7:1}, convolutional filter size 5×3.

d) Long horizontal anchors: aspect ratios = {1:15, 1:25, 1:35}, convolutional filter size 1×n.

e) Long vertical anchors: aspect ratios = {15:1, 25:1, 35:1}, convolutional filter size n×1.

then dot with feat1. Using the exponential operation, the probability of each pixel being a positive text is mapped to the range [1.0, e], thus able to retain background information and simultaneously highlights the detection information. False positive detections of small texts are reduced in this way.

Architecture

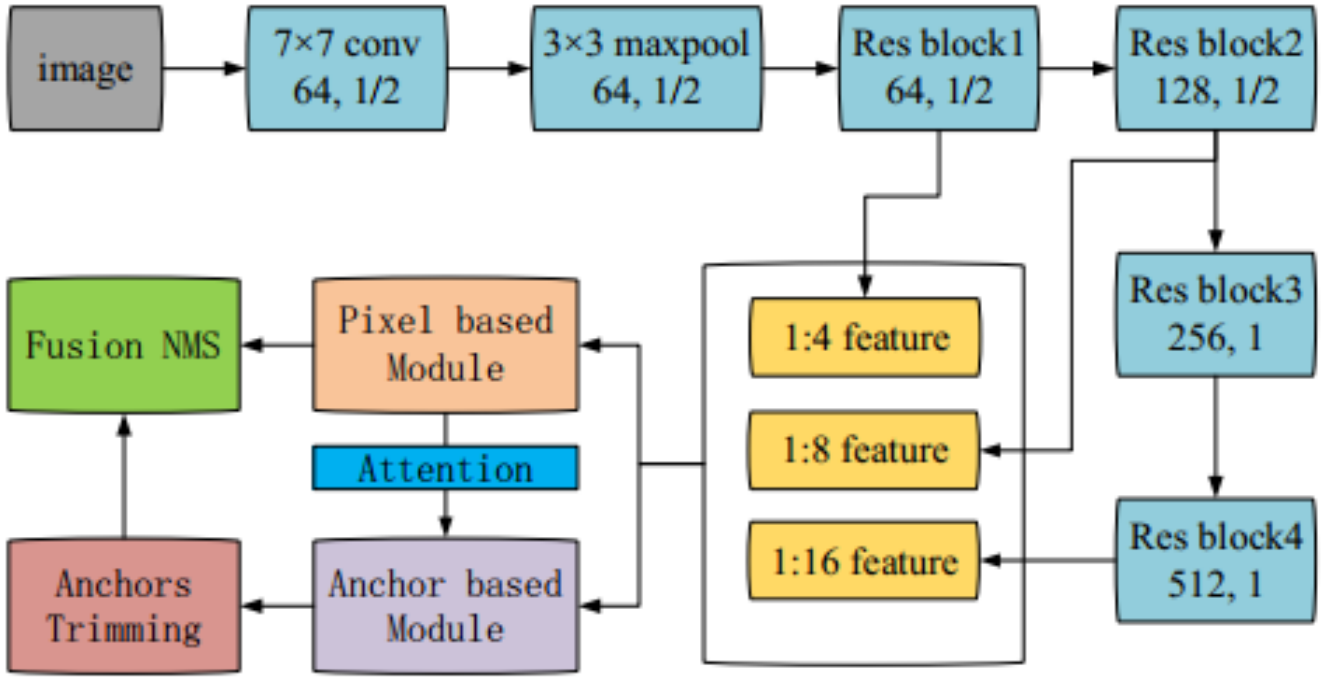

Figure 4: The overall architecture of Pixel-Anchor.

Architecture

Fusion NMS

threshold (e.g. 0.2). Because the candidate text boxes from the anchor-based module and the pixel-based module are overlapped, we add 1.0 to the scores of text boxes predicted by the anchor-based module, those text boxes have higher priority when conducting the NMS.

detection

pixel-based method

less likely to happen. In the pixel-based module, we filter out the predicted text boxes when the minimum size of its MBR is less than 10 pixels and the aspect ratio of its MBR is not in the range [1:15, 15:1]. Finally, we gather all the

anchor-based method

to get the final detection results. We assign the anchor-based module to detect small texts and long texts and assign the pixel-based module to detect medium size texts. In the APL of the anchor-based module, anchors

Experiments

Figure 10: Some examples of detection results on our poster dataset.

Table 2: The single-scale results on ICDAR 2015.

Method	Precision	Recall	F-score
CTPN [31]	74.22	51.56	60.85
SegLink [32]	74.74	76.50	75.61
SSTD [33]	80.23	73.86	76.91
WordSup [34]	79.33	77.03	78.16
EAST [17]	83.27	78.33	80.72
TextBoxes++ [14]	87.2	76.7	81.7
R^2CNN [35]	85.62	79.68	82.54
Pixel-Link [18]	85.5	82.0	83.7
FTSN [36]	88.65	80.07	84.14
SLPR [37]	85.5	83.6	84.5
Incept Text [38]	90.5	80.6	85.3
FOTS [20] detection branch only	88.84	82.04	85.31
Mask Text [39]	91.6	81.0	86.0
PSENet [19]	89.30	85.22	87.21
FOTS [20] with recognition branch	91.0	85.17	87.99
Pixel-Anchor	88.32	87.05	87.68

Table 3: The single-scale results on ICDAR 2017 MLT.

Method	Precision	Recall	F-score
SARI_FDU_RRPN_v1 [41]	71.17	55.50	62.37
Lyu et al. [42]	83.8	55.6	66.8
FOTS [20] detection branch only	79.48	57.45	66.69
FOTS [20] with recognition branch	80.95	57.51	67.25
PSENet [19]	77.01	68.40	72.45
Pixel-Anchor	79.54	59.54	68.10