Compact BLE-Based Smart Ring PCB for Health Monitoring and Gesture Detection

Vipin Kumar Mishra
M.Tech ECE(VLSI), IIIT Bangalore
Email: Vipin.Mishra@iiitb.ac.in
Project Repository: https://github.com/your-github-username/smart-ring-project

***Abstract*—This paper presents the design and implementation of a compact smart ring printed circuit board (PCB) integrating physiological sensing, motion sensing, Bluetooth Low Energy (BLE) communication, and rechargeable battery operation within a wearable ring-compatible form factor. The proposed wearable platform utilizes the Nordic nRF52810 BLE microcontroller as the primary processing and wireless communication subsystem, a MAX30102 photoplethysmography (PPG) sensor for heart-rate and SpO_2 monitoring, and an ICM-42670 inertial measurement unit (IMU) for gesture and motion detection applications.**

The implemented hardware architecture incorporates Li-ion battery charging, low-noise voltage regulation, RF antenna matching, compact debugging interfaces, and wearable-oriented PCB miniaturization techniques. The complete schematic and PCB layout were developed using KiCad with emphasis on compact subsystem integration, antenna keep-out implementation, routing optimization, manufacturability, and wearable mechanical compatibility.

Several wearable-oriented PCB optimization techniques including backside sensor placement, custom compact SWD pads, exposed charging pads, antenna keepout regions, compact passive placement, and dense routing organization were implemented to achieve significant miniaturization. The final two-layer PCB achieved dimensions of approximately 22.8 mm $\times$ 9.6 mm while integrating sensing, wireless communication, power management, and debugging interfaces within a compact smart ring platform.

The project demonstrates successful realization of a compact wearable embedded hardware architecture suitable for physiological monitoring, gesture sensing, BLE communication, and low-power wearable electronics applications.

***Index Terms*—Smart Ring, BLE, Wearable Electronics, nRF52810, MAX30102, ICM-42670, Health Monitoring, Gesture Detection, KiCad, Embedded Systems**

I. Introduction

Wearable electronics have experienced rapid advancement due to increasing demand for compact, low-power, and intelligent embedded systems capable of continuous physiological monitoring, wireless communication, and real-time user interaction. Among modern wearable platforms, smart rings represent one of the most compact and challenging embedded hardware implementations because of severe constraints in PCB area, battery capacity, antenna integration, and sensor placement.

Recent advancements in low-power wireless microcontrollers, compact MEMS sensors, optical sensing technologies, and PCB manufacturing have enabled integration of sophisticated embedded functionality within miniature wearable form factors. Smart rings provide advantages including portability, continuous sensing capability, low-profile operation, and gesture-based interaction while maintaining compact dimensions suitable for daily wearable applications.

Despite these advantages, smart ring hardware implementation introduces several engineering challenges including:

- PCB miniaturization
- Compact battery integration
- RF antenna implementation
- Sensor placement optimization
- Low-noise power delivery
- Routing congestion
- Wearable mechanical compatibility

This work presents the design and implementation of a compact BLE-enabled smart ring PCB integrating physiological sensing, gesture detection, wireless communication, and rechargeable battery operation within a wearable ring-compatible architecture.

The implemented smart ring platform integrates:

- nRF52810 BLE wireless microcontroller
- MAX30102 PPG sensor
- ICM-42670 IMU sensor
- Li-ion charging subsystem
- Low-noise power regulation
- Compact BLE antenna implementation

The complete schematic and PCB layout were developed using KiCad with emphasis on compact subsystem integration, RF-aware routing, wearable-oriented PCB optimization, and manufacturability within constrained smart-ring dimensions.

II. System Design

A. Overall System Architecture

The proposed smart ring architecture integrates sensing, wireless communication, processing, and power-management subsystems within a compact wearable PCB platform.

The overall architecture consists of:

- BLE processing subsystem
- Physiological sensing subsystem
- Motion sensing subsystem
- Battery charging subsystem
- Voltage regulation subsystem
- RF antenna subsystem

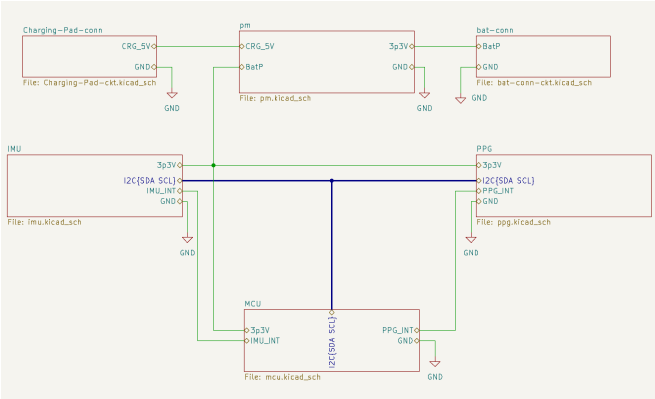

Fig. 1. Root schematic of the proposed smart ring architecture

TABLE I
MAJOR HARDWARE COMPONENTS USED IN THE SMART RING

Component	Manufacturer	Part Number
BLE MCU	Nordic Semiconductor	nRF52810-QCAA-T
PPG Sensor	Analog Devices	MAX30102
IMU Sensor	TDK InvenSense	ICM-42670-P
Battery Charging IC	Microchip Technology	MCP73831-2-OT
3.3 V LDO	Texas Instruments	TPS78233DDC
32 MHz Crystal	ECS Inc.	ECS-320-8-37-CKM-TR
2.4 GHz Antenna	Johanson Technology	2450AT18A100E
Passive Components	Various	0402 Package Components

Fig. 1 illustrates the top-level architecture of the proposed smart ring platform.

The nRF52810 BLE microcontroller serves as the primary processing and communication unit, while the MAX30102 and ICM-42670 provide physiological sensing and gesture-detection capabilities respectively.

B. Component Selection

Major hardware components were selected based on compact package size, low-power operation, wearable compatibility, BLE support, sensing capability, and PCB miniaturization constraints.

Table I summarizes the major hardware components utilized in the implemented smart ring platform.

C. BLE Processing Subsystem

The Nordic nRF52810 BLE SoC was selected as the primary processing and wireless communication subsystem due to its compact package size, low-power operation, integrated BLE radio, and suitability for wearable embedded applications.

The nRF52810 integrates:

- ARM Cortex-M4 processor
- Bluetooth Low Energy radio
- GPIO peripherals
- SPI and I2C interfaces
- Low-power operating modes

The MCU interfaces with the sensing peripherals through the I2C communication interface while handling BLE communication, sensor-data acquisition, interrupt handling, and embedded processing operations.

A 32 MHz external crystal oscillator was incorporated to provide stable BLE clock generation required for reliable wireless communication. The ECS-320-8-37-CKM-TR crystal was selected due to its compact package size and BLE-compatible frequency stability.

Dedicated load capacitors and compact routing were implemented near the crystal subsystem to improve oscillator stability and reduce noise coupling.

The MCU subsystem additionally incorporates:

- Compact SWD programming pads
- RF matching network
- Antenna feed circuitry
- Decoupling capacitors

Compact exposed SWD pads were implemented instead of bulky programming headers to reduce PCB area and improve wearable compatibility.

D. MAX30102 PPG Sensing Subsystem

The MAX30102 optical sensor was integrated as the physiological sensing subsystem for heart-rate and SpO_2 monitoring applications.

The sensor incorporates:

- Red LED
- Infrared LED
- Integrated photodetector
- Analog front-end circuitry
- FIFO memory
- I2C communication interface

The sensor operates using reflective photoplethysmography (PPG), where variations in reflected optical intensity caused by blood-volume changes are utilized for physiological signal acquisition.

Communication between the MAX30102 and nRF52810 is implemented using the I2C interface through shared SDA and SCL communication lines. The sensor additionally provides an interrupt output connected to the MCU for interrupt-driven sensing operation.

Dedicated decoupling capacitors were incorporated near the sensor supply pins to improve power integrity and reduce supply noise during optical sensing operation.

Special emphasis was placed on sensor placement optimization. Since physiological sensing requires direct skin contact, the MAX30102 was positioned on the backside of the PCB to align with the inner surface of the ring during wearable operation.

This backside placement improves optical alignment, enhances physiological signal acquisition, and reduces interference from surrounding PCB structures.

E. ICM-42670 IMU Sensing Subsystem

The ICM-42670 six-axis inertial measurement unit (IMU) was integrated as the primary motion-sensing subsystem for gesture detection and wearable motion tracking applications.

The IMU integrates:

- 3-axis accelerometer
- 3-axis gyroscope

The sensor communicates with the nRF52810 through the shared I2C interface and additionally provides an interrupt output for event-driven sensing operation.

The interrupt-driven architecture reduces continuous processor polling and improves overall wearable-system power efficiency.

Dedicated decoupling capacitors and compact routing were implemented near the IMU subsystem to improve power integrity and reduce communication noise.

The integrated IMU enables future implementation of:

- Gesture recognition
- Motion tracking
- Activity monitoring
- Motion-triggered interaction

F. Power Management Subsystem

The smart ring platform utilizes a rechargeable Li-ion battery architecture designed for compact wearable operation.

The implemented power-management subsystem incorporates:

- MCP73831 Li-ion charging controller
- TPS78233 low-dropout voltage regulator
- Rechargeable lithium-ion battery

1) Li-ion Charging Subsystem: The MCP73831 charge-management controller was selected for single-cell Li-ion battery charging due to:

- Compact package size
- Minimal external component count
- Simplicity of implementation
- Wearable compatibility

The charging subsystem supports constant-current/constant-voltage (CC/CV) charging operation from an external 5 V charging source.

Dedicated capacitors were incorporated near the VDD and VBAT pins to improve supply stability and transient response during charging operation.

Compact exposed charging pads were implemented instead of bulky charging connectors to reduce PCB area and improve wearable integration.

2) 3.3 V Regulation Subsystem: A TPS78233 low-dropout regulator was implemented to provide a stable 3.3 V supply rail for the MCU and sensing peripherals.

The regulator was selected due to:

- Low quiescent current
- Compact package size
- Low-noise operation
- Suitability for analog sensing

Dedicated input and output decoupling capacitors were incorporated to improve regulator stability and reduce supply ripple.

G. BLE Antenna Subsystem

Wireless communication is implemented using a compact 2.4 GHz chip antenna integrated with the nRF52810 BLE subsystem.

A dedicated RF matching network was incorporated between the MCU RF output and antenna feed to improve impedance matching and wireless communication performance.

Special emphasis was placed on antenna placement and RF keepout implementation. The antenna was positioned near the PCB edge to improve radiation efficiency and reduce interference from surrounding copper structures.

A dedicated antenna keepout region was implemented to prevent:

- Ground copper beneath antenna
- Signal routing near antenna
- Via placement within RF region
- Copper pour interference

This RF-aware PCB implementation improves BLE communication performance and antenna efficiency within the compact wearable architecture.

III. PCB Layout Design

A. Component Placement Strategy

The PCB layout was developed using KiCad as a compact two-layer wearable embedded platform integrating sensing, communication, processing, and power-management subsystems within constrained smart-ring dimensions.

The implemented PCB achieved dimensions of approximately:

$$22.8 \text{ mm} \times 9.6 \text{ mm}$$

Component placement was optimized to:

- Minimize routing congestion
- Reduce trace lengths
- Improve subsystem organization
- Maintain wearable compatibility

0402 passive components were utilized extensively to improve compactness while maintaining manufacturability.

The PCB layout incorporates:

- Backside PPG placement
- Compact SWD pads
- Exposed charging pads
- Compact battery pads
- RF keepout region

Fig. 2 illustrates the final PCB layout and routing implementation.

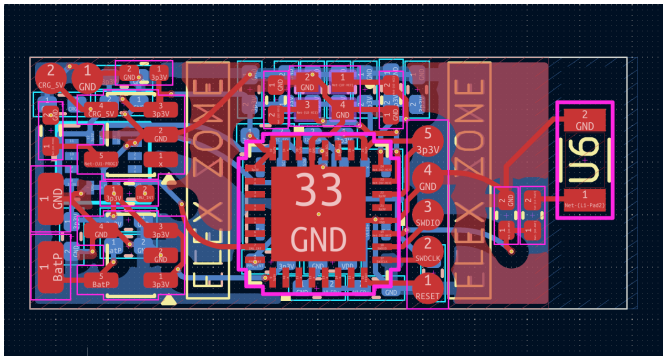

Fig. 2. Final PCB layout and routing implementation

B. Routing and Ground Plane Design

PCB routing was optimized to minimize interconnect length, reduce routing overlap, and maintain compact subsystem integration.

Both PCB layers were utilized collaboratively for routing and subsystem interconnection while satisfying wearable layout constraints.

Sensitive interfaces including:

- I2C
- Crystal routing
- RF feed routing

were implemented using short and compact interconnect paths to improve communication reliability and reduce interference coupling.

Ground copper pours were incorporated to improve:

- Return-current continuity
- Supply stability
- Electromagnetic interference suppression

Dedicated decoupling capacitors were placed near integrated circuits and supply pins to improve transient response and supply integrity.

C. Design Rule Verification

Electrical Rule Check (ERC) and Design Rule Check (DRC) verification were performed using KiCad verification tools to validate:

- Schematic connectivity
- PCB clearances
- Routing integrity
- Footprint association
- Manufacturability compliance

The implemented smart ring PCB successfully passed ERC and DRC verification without critical connectivity or manufacturability violations.

D. Design Improvements and PCB Optimization

Several design optimizations and wearable-oriented improvements were implemented during the iterative PCB development process to achieve compactness, manufacturability, RF reliability, and improved subsystem organization.

The initial PCB implementation utilized larger routing clearances, external connectors, less optimized component placement, and reduced subsystem density. Multiple revisions were performed to improve overall smart ring integration.

Major improvements implemented in the final PCB include:

- Reduction of PCB dimensions to approximately 22.8 mm $\times$ 9.6 mm
- Migration from bulky connectors to exposed charging pads and compact battery solder pads
- Replacement of large SWD header with compact exposed SWD programming pads
- Extensive utilization of 0402 passive components to reduce occupied PCB area
- Backside placement of the MAX30102 PPG sensor for improved skin contact and wearable sensing compatibility
- Compact placement optimization of charging subsystem and sensing peripherals
- RF-aware antenna positioning near PCB edge
- Dedicated antenna keepout region implementation to improve BLE communication efficiency
- Routing optimization to reduce congestion and interconnect overlap
- Improved decoupling capacitor placement near MCU and sensing peripherals
- Optimized crystal routing for stable BLE clock generation
- Reduction of unnecessary copper near RF region
- Improved subsystem segregation between analog sensing, RF, and power-management circuitry

The implemented optimizations significantly improved wearable compatibility, PCB compactness, routing organization, RF reliability, and manufacturability while maintaining complete sensing and BLE functionality within constrained smart-ring dimensions.

IV. Results

The proposed smart ring platform was successfully implemented as a compact two-layer wearable PCB integrating sensing, communication, processing, and power-management subsystems.

Successful hardware integration was achieved for:

- nRF52810 BLE subsystem
- MAX30102 PPG subsystem
- ICM-42670 IMU subsystem
- Li-ion charging subsystem
- 3.3 V power regulation subsystem

The final PCB achieved dimensions of approximately:

$$22.8 \text{ mm} \times 9.6 \text{ mm}$$

while incorporating:

- BLE antenna subsystem
- RF keepout region
- Compact debugging interface
- Exposed charging pads
- Backside sensor integration

The implemented PCB successfully passed:

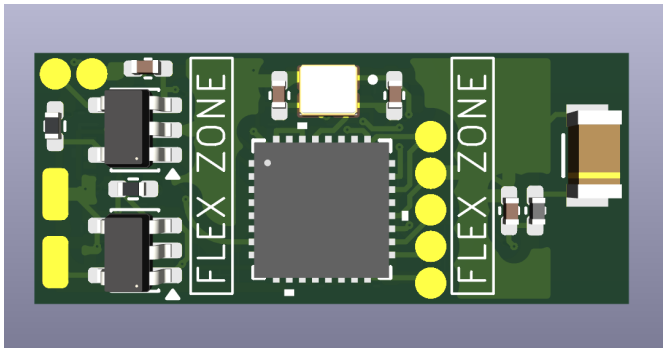

Fig. 3. Top-side 3D visualization of the final smart ring PCB

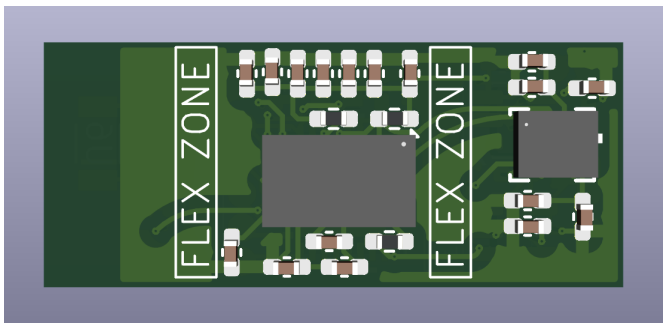

Fig. 4. Bottom-side 3D visualization of the final smart ring PCB

- ERC verification
- DRC verification
- Footprint validation
- Connectivity verification

Mechanical feasibility of the wearable platform was validated through compact PCB geometry, wearable-oriented component placement, and sensor alignment optimization.

Fig. 3 illustrates the final 3D visualization of the implemented smart ring PCB after routing optimization, RF keepout implementation, and compact subsystem integration.

Fig. 3 illustrates the top-side 3D visualization of the implemented smart ring PCB after routing optimization and compact subsystem integration.

Fig. 4 illustrates the bottom-side 3D visualization of the implemented smart ring PCB highlighting backside sensor placement and compact wearable integration.

V. GitHub Repository

The complete KiCad project including schematic files, PCB layout, custom footprints, manufacturing outputs, and project documentation was uploaded to a public GitHub repository.

The repository structure follows the recommended embedded hardware project template and was released under the MIT License.

The repository includes:

- KiCad project files
- Schematic source files
- PCB layout files
- Custom footprints
- Gerber files
- Bill of Materials (BOM)
- 3D PCB renders
- Documentation

A. Iterative Design Evolution and Industrial-Level Miniaturization Considerations

Multiple design iterations and subsystem optimizations were performed throughout the development of the smart ring PCB to improve compactness, routing efficiency, wearable compatibility, RF performance, and manufacturability.

The initial smart ring architecture was based on a PSoC 4 BLE module implementation. Although the module simplified BLE integration and firmware development, the overall occupied PCB area was significantly larger due to the integrated module footprint, larger antenna region, and increased routing constraints. The initial PCB implementation occupied approximately:

$$30.4 \text{ mm} \times 12.0 \text{ mm}$$

Such dimensions were considerably larger than practical smart-ring platforms available in commercial wearable products and therefore unsuitable for realistic ring-based implementation.

To improve miniaturization, the design was migrated from the larger PSoC BLE module architecture to the Nordic nRF52810 BLE SoC in a compact QFN package. This transition enabled substantial reduction in PCB area while providing improved flexibility in component placement, antenna routing, and subsystem integration.

After multiple PCB revisions and layout optimizations, the final smart ring PCB dimensions were successfully reduced to approximately:

$$22.8 \text{ mm} \times 9.6 \text{ mm}$$

This reduction demonstrates significant improvement in wearable miniaturization, routing organization, and subsystem integration within constrained smart-ring dimensions.

Several additional hardware and PCB optimizations were implemented during iterative layout refinement, including:

- Reduction of overall PCB dimensions from 30.4 mm $\times$ 12.0 mm to 22.8 mm $\times$ 9.6 mm
- Migration from bulky BLE module implementation to compact QFN-based BLE SoC architecture
- Replacement of external connectors with exposed charging pads and compact battery solder pads
- Elimination of large SWD programming headers using compact exposed SWD debugging pads
- Extensive utilization of 0402 passive components to reduce occupied PCB area
- Backside placement of the MAX30102 PPG sensor to improve skin alignment and physiological sensing performance
- Compact placement optimization of charging circuitry and sensing peripherals

- RF-aware antenna placement near PCB edge for improved BLE radiation efficiency
- Dedicated antenna keepout region implementation to reduce RF interference and improve wireless communication performance
- Routing optimization to minimize interconnect overlap and routing congestion
- Improved placement of decoupling capacitors near MCU and sensing subsystems for enhanced power integrity
- Crystal-routing optimization for stable BLE clock generation
- Reduction of unnecessary copper structures near RF antenna region
- Improved subsystem segregation between RF, analog sensing, and power-management circuitry

Although the final PCB successfully achieved compact wearable dimensions, further miniaturization techniques commonly utilized in industrial smart-ring products were also analyzed during the project.

Commercial smart-ring manufacturers generally employ significantly more advanced packaging and PCB technologies, including:

- WLCSP (Wafer-Level Chip Scale Packaging) instead of QFN packages
- HDI (High Density Interconnect) PCB technology
- Blind and buried vias
- Microvia-based routing
- Flexible or rigid-flex PCB structures
- Integrated System-in-Package (SiP) architectures
- Advanced ultra-miniature PMIC solutions

Industrial wearable platforms additionally utilize highly integrated power-management ICs such as:

- Texas Instruments BQ25120A
- Dialog DA9070
- Nordic nPM1300
- MAX20345 wearable PMIC

These integrated PMIC solutions combine:

- Battery charging
- Buck/boost conversion
- Multiple LDO outputs
- Battery protection
- Fuel gauging
- Load switching

within a single compact package.

Although utilization of such integrated PMIC solutions can significantly reduce PCB area and improve subsystem integration, they introduce substantially higher routing complexity, tighter layout constraints, increased manufacturing difficulty, and more challenging power-integrity considerations. Due to academic project constraints, PCB manufacturability considerations, component availability, and routing complexity limitations, a simpler discrete charging and regulation architecture consisting of the MCP73831 charging IC and TPS78233 LDO regulator was selected for the current implementation.

The implemented optimizations significantly improved wearable compatibility, PCB compactness, routing organization, RF reliability, and manufacturability while maintaining complete sensing and BLE functionality within constrained smart-ring dimensions.

References

[1] Nordic Semiconductor, "nRF52810 Product Specification," 2024.
[2] Analog Devices, "MAX30102 Pulse Oximeter and Heart-Rate Sensor Datasheet," 2024.
[3] TDK InvenSense, "ICM-42670-P Motion Tracking Device Datasheet," 2024.
[4] Microchip Technology, "MCP73831 Li-Ion Charge Management Controller Datasheet," 2024.
[5] Texas Instruments, "TPS78233 Low Dropout Regulator Datasheet," 2024.
[6] KiCad EDA, "KiCad PCB Design Software," Available: https://www.kicad.org