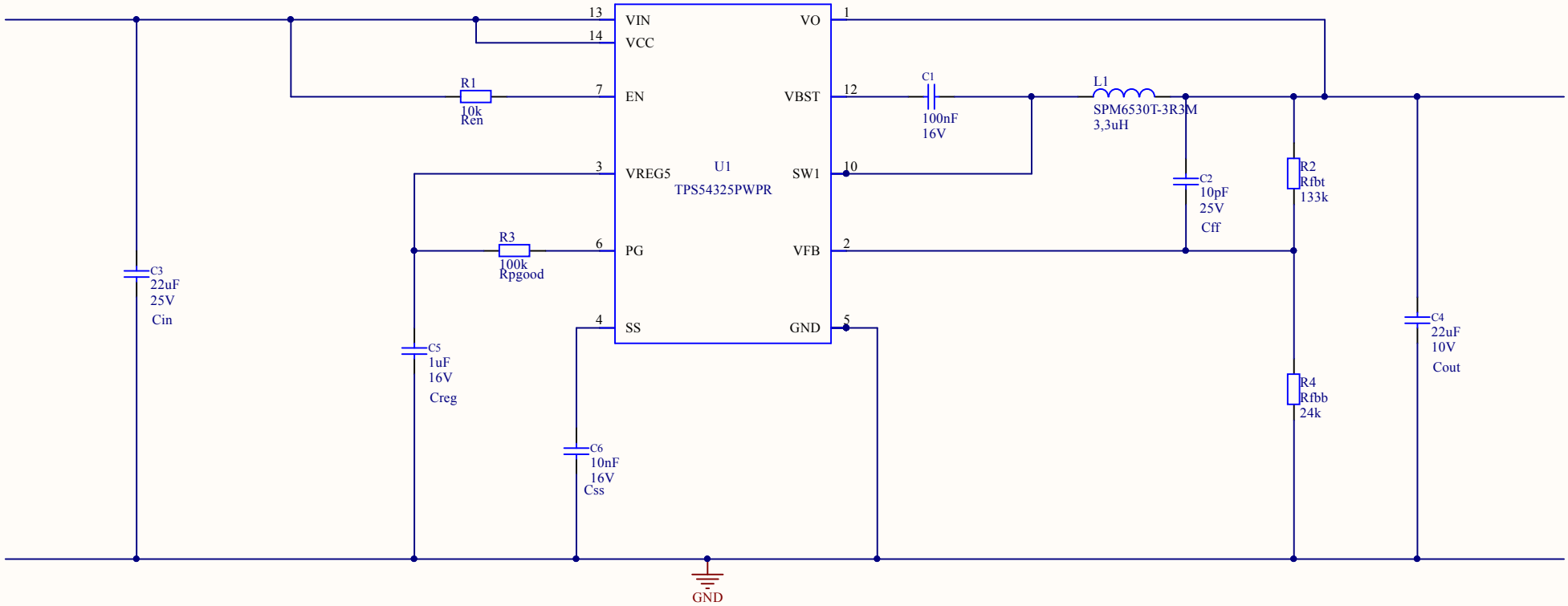


| | | |
|---|---|---|
| Title | | |
| Size A4 | Number | Revision |
| Date: 22.03.2016 | | Sheet of |
| File: C:\Users\..\tx_mini_buck.SchDoc | | Drawn By: |

# on/off für tx modul, tx, spannugsteiler telemetrie, Stecker

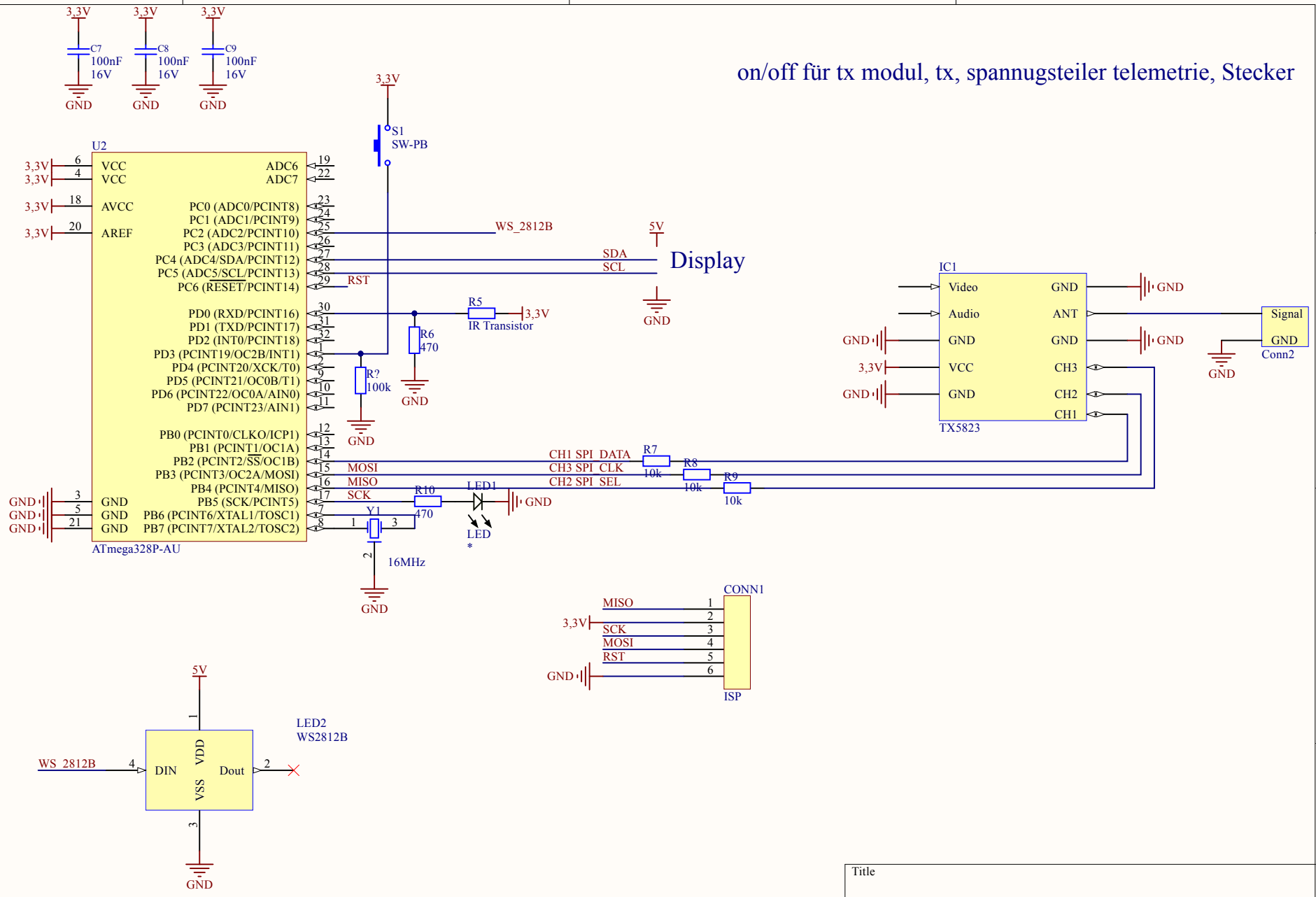


| Title | | |
|---|---|---|
| Size A4 | Number | Revision |
| Date: 22.03.2016 | | Sheet of |
| File: C:\Users\..\tx mini uc and tx.SchDoc | | Drawn By: |