ENGINEERING REPORT

Pilatus Aircraft Ltd.
Stans, Switzerland

Affected Aircraft:	**PC-24**
Title:	**Wing - Aileron and Aileron Support Structure**
Number:	**ER-24-000620**
Issue:	**01**
Issuing Office	**EXE**

Template used for this Report: Form 1003-02b / SPoI V3.0

PROPRIETARY NOTICE

This document contains Pilatus Aircraft Limited (in this document called Pilatus) proprietary information and shall at all times remain the property of Pilatus; no intellectual property right or licence is granted by Pilatus in connection with any information contained in it. It is supplied on the express condition that said information is treated as confidential, shall not be used for any purpose other than that for which it is supplied, shall not be disclosed in whole or in part, to third parties other than the Pilatus Group members and associated Partners, their subcontractors and suppliers (to the extent of their involvement in Pilatus projects), without Pilatus prior written consent.

APPROVAL RECORD

Issue No.	Technical Approval			Compliance Verification				Approval Stamp & Release Date
	Prepared by Name/Dept/Sign	Checked by Name/Dept/Sign	Approved by Name/Dept/Sign	CVE M Name/Sign	CVE E Name/Sign	CVE S Name/Sign	CVE F Name/Sign	
01	14/02/2017 M. Payne	14.02.2017 S. Rossi	15.02.2017 M. Harrison	N/A	N/A	D. Heremi APPROVED FOR PROTOTYPE ONLY	N/A	Approved under DOA No. EASA.21J.357 28.02.2017

DESCRIPTION OF CHANGES

This page will be updated for each new issue

Issue No	Page No.	Parag. No.	Description of Changes
01			Initial Issue

SUMMARY / CONCLUSIONS

This report covers the analysis of the Aileron, Trim Tab, and Aileron control structure. The basic analysis is documented in detail in this report.
The critical pressure load cases and aileron orientations from ref. [11], [12] & [14] are utilized. Wing displacements for the matching pressure cases were recovered from the wing GFEM ref. [16] and applied to the Aileron GFEM as defined in ref. [13].
Design and sizing criteria are taken from ref. [1]. The aileron assemble is predominately manufactured from 2000 series aluminium; metallic material and fastener data has been taken from ref. [3]. Material data compiles with oversize billet selection from ref. [6].
With the exception of NAS1921M fasteners in aluminium sheet; fastener strength data has been taken from ref [4]. Strength data for NAS1921M in aluminium sheet is given in appendix O.
The design incorporates a CFRP trailing edge; hot and cold environmental temperatures have been taken from ref. [21]. CFRP material data has been taken from ref.[19]; fastener data from ref. [20].

A detail list part RF's is presented in section 5.
The minimum RF's for each major assemble follows:

Assembly	Load Case	Failure Mode	Applied Load (N or N/mm) or Stress (MPa)	Allowable Load (N) or Stress (MPa)	Section	RF
Aileron Box	3056	Front Spar Free edge stress	206.8 MPa	214.0 MPA	2.5.6.9	1.03
LE Mass Balance Assy.	3002	L skin – Front Spar Joint	802.3 N.	1035. N.	2.5.12.3.5	1.29
Trailing Edge	5005 + thermal envelope	Panel TE2 IRB	74.0 MPa	77.5 MPa	2.5.13.2.3	1.04
Trim Tab	3003 (LL)	M/C body "centre block"	382.0 MPa	386. MPa	2.5.14.3	1.01
Support Structure	3054	IB Bracket Free edge stress	412.8 MPa	418.0 MPa	2.5.15.4.3	1.01

REQUIREMENTS

This report shows compliance to the following requirements:

Req. No.	PC-24 Certification Basis CRI A-01 Text	Compliance Statement	Reference in this Report
§23.305 (a)	(a) The structure must be able to support limit loads without detrimental, permanent deformation. At any load up to limit loads, the deformation may not interfere with safe operation.	It is demonstrated by analysis that the aileron assembly is able to support limit loads without detrimental, permanent deformation and that the deformations do not interfere with safe operation The following structure is considered: • Aileron body. • Trim tab. • Aileron support structure.	
§23.305 (b)	(b) The structure must be able to support ultimate loads without failure for at least three seconds, except local failures or structural instabilities between limit and ultimate load are acceptable only if the structure can sustain the required ultimate load for at least three seconds. However, when proof of strength is shown by dynamic tests simulating actual load conditions, the three second limit does not apply.	It is shown that the front spar is able to support the ultimate loads without failure by showing that the structure has no ultimate RF's < 1.0. Detailed list of reserve factors provided for all structural parts.	3 List of Reserve Factors
§23.307 (a)	(a) Compliance with the strength and deformation requirements of CS 23.305 must be shown for each critical load condition. Structural analysis may be used only if the structure conforms to those for which experience has shown this method to be reliable. In other cases, substantiating load tests must be made. Dynamic tests, including structural flight tests, are acceptable if the design load conditions have been simulated.	Analysis provided for all cases given in loading document. Reference [11] ER-24-000368, Definition of Aileron & Trim's Load Cases, Issue 01ER Structural analysis methodology is shown from experience as being reliable.	2.3 Load Case Selection
§23.393 (a)	(a) Control surfaces and supporting hinge brackets must be designed to withstand inertial loads acting parallel to the hinge line.	Inertia case included in list of load cases applicable to all parts.	2.3.3
§23.393 (b)	(b) In the absence of more rational data, the inertia loads may be assumed to be equal to KW, where –	Inertia load case constructed from list of acceptable values Aileron is a horizontal surface, K = 12. This is assumed to be a limit case	2.4
§23.393 (b)(2)	(2) K = 12 for horizontal surfaces; and	See above	
§23.393 (b)(3)	(3) W = weight of the movable surfaces.	Mass of FE models adjusted to estimates of assembly weight from ER-24-000191-05.	2.4
§23.651 (a)	(a) Limit load tests of control surfaces are required. These tests must include the horn or fitting to which the control system is attached.	The aileron assembly and control system horn are passed by analysis.	
§23.657 (a)	(a) Control surface hinges, except ball and roller bearing hinges, must have a factor of safety of not less than 6·67 with respect to the ultimate bearing strength of the softest material used as a bearing.	All hinge joints use ball/roller bearings except trim tab piano hinge. Ultimate bearing RF > 6.67 (ultimate factor equal to 1.5 already included)	2.5.14.5
§23.657 (b)	(b) For ball or roller bearing hinges, the approved rating of the bearing may not be exceeded.	Rating checked against interface loads	2.5.15.3.1 2.5.15.4.1 2.5.15.5.1
§23.659 Intro	The supporting structure and the attachment of concentrated mass balance weights used on control surfaces must be designed for –	Specific FEM [10] constructed for LE assembly analysis. Mass of FE models adjusted to estimates of assembly weight from ER-24-000191-05.	2.4.2
§23.659 (a)	(a) 24g normal to the plane of the control surface;	Analysis for load case provided	2.5.12
§23.659 (b)	(b) 12g fore and aft; and	Analysis for load case provided	2.5.12
§23.659 (c)	(c) 12g parallel to the hinge line.	Analysis for load case provided	2.5.12
§23.693 Content	Control system joints (in push-pull systems) that are subject to angular motion, except those in ball and roller bearing systems, must have a special factor of safety of not less than 3·33 with respect to the ultimate bearing strength of the softest material used as a bearing. This factor may be reduced to 2·0 for joints in cable control systems. For ball or roller bearings, the approved ratings may not be exceeded.	All hinge joints use ball/roller bearings except trim tab piano hinge for which an Ultimate bearing RF > 6.67 (ultimate factor equal to 1.5 already included) is demonstrated	2.5.15.3.1 2.5.15.4.1 2.5.15.5.1

APPLICABILITY

This Engineering Report is applicable to the following aircraft:

Aircraft Type / Aircraft S/N	Standard Aircraft Drawing Number	Additional information
PC-24	**500.00.24.001**	

The following table lists the affected top level drawing number of the system/component/part that is affected by this report.

Report Issue No.	Affected top level drawing number
Issue 1	5576024913/F/AILERON ASSY, LH 5576024914/F/AILERON ASSY, RH 5571024102/E/WING ASSY

CONFORMITY STATEMENT

This report shows compliance with certification requirements for the following items of the **Type Design (A)** (design for which certification is requested):

Item Number	Rev.	Name	Remarks, e.g. EC/DC/FSF
557.10.24.109/10	B	Wing Structure LH/RH	
557.60.24.911/12	C	Aileron Installation	
557.60.24.913/14	C	Aileron and Tab	
557.60.24.915/16	-	Flettner Tab Aileron Assy LH/RH	

Type Design (A)

The following **Models (D)** were used in this report:

Item ID, File Name, etc.	Version / Revision / Timestamp	Remarks
See section Calculation Files and FEM Basis, FE Model & Loads Files		

Identification of Test Article Design Data (D)

The following **differences** between the **Model (D)** and the **Type Design (A)** were identified:

No.	Description	Assessment
None		

Differences between Model (D) and Type Design (A)

The items discussed in this report are sufficiently representative of the Type Design. It is shown that any identified design differences and non-conformances do not affect the validity or applicability of the compliance findings to the Type Design.

TOOLS AND METHODOLOGY

The following tools and methodology have been used for the compliance demonstration in this report.

CALCULATION FILES

The following calculation files have been used in the generation of this report. Each of these files is stored in Teamcenter together with this report.

ID	File Name	Type [1]	Description
1	PC24_Loading_Register-01	xlsx	
2	PC24_Aileron_Box-01	xlsm	Aileron Box, Excel analysis file
3	PC24_Aileron_Fspar_caps_PESS_analysis-01	pess	PESS intermediary analysis, used by file 2
4	PC24_Aileron_Fspar_webs_PESS_analysis-01	pess	PESS intermediary analysis, used by file 2
5	PC24_Aileron_Ribs_PESS_analysis-01	pess	PESS intermediary analysis, used by file 2
6	PC24_Aileron_Rspar_PESS_analysis-01	pess	PESS intermediary analysis, used by file 2
7	PC24_Aileron_Skins_PESS_analysis-01	pess	PESS intermediary analysis, used by file 2
8	PC24_Aileron_FSpar_lugs_splice-01	xlsm	Aileron Box, Excel analysis file
9	PC24_aileron_LE_balance_mass-01	xlsm	Leading edge, Excel analysis file
10	PC24_Aileron_LEribs_PESS_analysis-01	pess	PESS intermediary analysis, used by file 9
11	PC24_Aileron_LEskins_PESS_analysis-01.pess	pess	PESS intermediary analysis, used by file 9
12	PC24_Aileron_Mid-OB_hinge_fittings-01	xlsx	Front spar hinge fittings, Excel analysis file
13	PC24_Aileron_Trim-Tab-01	xlsx	Trim tab, Excel analysis file
14	PC24_Aileron_WBox-support_struc-01	xlsm	Wing side supports, Excel analysis file
15	PC24_Aileron_CFRP_parts.xlsx	xlsm	Trailing edge and fairings, Excel analysis file
16	PC24_aileron_CBUSH_Flexibility_Huth_R1.0	.xlsx	File calculating PBUSH stiffener values used in aileron DFEMs

Table 0-1 Excel and PESS analysis files.

Excel analysis files utilise a structured layout/format as shown in Figure 2-22.

[1] *.xlsm Microsoft Excel 2010 macro enabled spreadsheet
*.xls Microsoft Excel 2007 spreadsheet
*.pess Pilatus PESS v2.0.0

ID	File Name	Type [2]	Description
101	PC24_Aileron_Fspar_caps_PESS_Stringer Report-01	xlsx	PESS report file used by calc. file [2]
102	PC24_Aileron_Fspar_webs_PESS_Panel Report-01	xlsx	PESS report file used by calc. file [2]
103	PC24_Aileron_Fspar_webs_PESS_Stringer Report_01	xlsx	PESS report file used by calc. file [2]
104	PC24_Aileron_Ribs_PESS_Panel Report-01	xlsx	PESS report file used by calc. file [2]
105	PC24_Aileron_Ribs_PESS_Stringer Report-01	xlsx	PESS report file used by calc. file [2]
106	PC24_Aileron_Rspar_PESS_Panel Report-01	xlsx	PESS report file used by calc. file [2]
107	PC24_Aileron_Rspar_PESS_Stringer Report_01	xlsx	PESS report file used by calc. file [2]
108	PC24_Aileron_Skins_PESS_Panel Report-01	xlsx	PESS report file used by calc. file [2]
109	PC24_Aileron_LEribs_PESS_Panel Report-01	xlsx	PESS report file used by calc. file [9]
110	PC24_Aileron_LEskins_PESS_Panel Report-01	xlsx	PESS report file used by calc. file [9]

Table 0-2 PESS report (output summary) files

[2] *.xlsm Microsoft Excel 2010 macro enabled spreadsheet
*.xls Microsoft Excel 2007 spreadsheet

ID	File Name	Type [3]	Description
201	PC24_Aileron_box_ELavg_Panel_DFEM20_LoadExtraction	xlsx	PESS loading file used by calc file [2]
202	PC24_Aileron_box_ELavg_Panel_DFEM30_LoadExtraction	xlsx	E PESS loading file used by calc file [2]
203	PC24_Aileron_box_ELavg_Panel_DFEM40_LoadExtraction	xlsx	PESS loading file used by calc file [2]
204	PC24_Aileron_box_ELavg_Panel_DFEM50_LoadExtraction	xlsx	PESS loading file used by calc file [2]
205	PC24_Aileron_box_FBD-SC_Panel_DFEM20_LoadExtraction	xlsx	PESS loading file used by calc file 2
206	PC24_Aileron_box_FBD-SC_Panel_DFEM30_LoadExtraction	xlsx	PESS loading file used by calc file 2
207	PC24_Aileron_box_FBD-SC_Panel_DFEM40_LoadExtraction	xlsx	PESS loading file used by calc file [2]
208	PC24_Aileron_box_FBD-SC_Panel_DFEM50_LoadExtraction	xlsx	PESS loading file used by calc file [2]
209	PC24_Aileron_box_PESS_Stringer_DFEM20_LoadExtraction -01	xlsx	PESS loading file used by calc file [2]
210	PC24_Aileron_box_PESS_Stringer_DFEM30_LoadExtraction -01	xlsx	PESS loading file used by calc file [2]
211	PC24_Aileron_box_PESS_Stringer_DFEM40_LoadExtraction -01	xlsx	PESS loading file used by calc file [2]
212	PC24_Aileron_box_PESS_Stringer_DFEM50_LoadExtraction -01	xlsx	PESS loading file used by calc file [2]
213	PC24_Aileron_LE_ELavg_Panel_DFEM20_LoadExtraction (Panel_Output)-01	xlsx	PESS loading file used by calc file [9]
214	PC24_Aileron_LE_ELavg_Panel_DFEM30_LoadExtraction (Panel_Output)-01	xlsx	PESS loading file used by calc file [9]
215	PC24_Aileron_LE_ELavg_Panel_DFEM40_LoadExtraction (Panel_Output)-01	xlsx	PESS loading file used by calc file [9]
216	PC24_Aileron_LE_ELavg_Panel_DFEM50_LoadExtraction (Panel_Output)-01	xlsx	PESS loading file used by calc file [9]
217	PC24_Aileron_LE_FBD-SC_Panel_DFEM20_LoadExtraction (Panel_Output)-01	xlsx	PESS loading file used by calc file [9]
218	PC24_Aileron_LE_FBD-SC_Panel_DFEM30_LoadExtractionPanel_(Panel_Output)-01	xlsx	PESS loading file used by calc file [9]
219	PC24_Aileron_LE_FBD-SC_Panel_DFEM40_LoadExtraction (Panel_Output)-01	xlsx	PESS loading file used by calc file [9]
220	PC24_Aileron_LE_FBD-SC_Panel_DFEM50_LoadExtraction_(Panel_Output)-01	xlsx	PESS loading file used by calc file [9]

Table 0-3 PESS intermediate loading files

[3] *.xlsm Microsoft Excel 2010 macro enabled spreadsheet
*.xls Microsoft Excel 2007 spreadsheet

FEM BASIS, FE MODEL & LOADS FILES

The following FE models and loads files have been used in the generation of this report. Each of these files is stored in Teamcenter together with this report.

ID	File Name	Type	Description	Validation Ref.
1	PC24_Aileron_master-R1.0	.modfem	Master file from which all aileron/tab angle combinations are created. CQUAD4 model	[17]
2	PC24_Aileron_DFEM10-25a0t-R1.0	.modfem	Aileron at 25° up, trim tab at 0° CQUAD4 model	See Id 1
3	PC24_Aileron_DFEM20-22a0t-R1.0	.modfem	Aileron at 22° up, trim tab at 0° CQUAD4 model	See Id 1
4	PC24_Aileron_DFEM30_0a0t-R1.0	.modfem	Aileron at 0°, trim tab at 0° CQUAD4 model	See Id 1
5	PC24_aileron_DFEM40_3ail0tab-R1.0	modfem	Aileron at 3° down, trim tab at 0° CQUAD4 model	See Id 1e
6	PC24_Aileron_DFEM50_10a0t-R1.0	.modfem	Aileron at 10° down, trim tab at 0° CQUAD4 model	See Id 1
7	PC24_Aileron_DFEM60_15a0t-R1.0	.modfem	Aileron at 15° down, trim tab at 0° CQUAD4 model	See Id 1
8	PC24-Aileron_Mid_Hinge_R1.0	.modfem	Solid CTET10 model Fasteners as CBUSH elements	[17]
9	PC24-Aileron_OB_Hinge_R1.0	.modfem	Solid CTET10 model Fasteners as CBUSH elements	[17]
10	PC24_LE_Balance_mass-R1.0	.modfem	Leading edge skins & ribs. CQUAD4 model Fasteners as CBUSH elements	[17]
11	PC24-Ail_Trim_Tab-R1.0	.modfem	Trim tab in neutral 0° position Solid CTET10 model	[17]
12	PC24-Ail_Trim_Tab-up-R1.0	.modfem	Trim tab in extreme aileron & tab up position Solid CTET10 model	See Id 11
13	PC24-Ail_Trim_Tab-down-R1.0	.modfem	Trim tab in extreme aileron & tab down position Solid CTET10 model	See Id 11
14	PC24_Aileron_IB-WBox-hinge-R1.0	.modfem	Solid CTET10 model Fasteners as CBUSH elements	[17]
15	PC24_Aileron_Mid-WBox-hinge-R1.0	.modfem	Solid CTET10 model Fasteners as CBUSH elements	[17]
16	PC24_Aileron_OB-WBox-hinge-R1.0	.modfem	Solid CTET10 model Fasteners as CBUSH elements	[17]

Table 0-4 Aileron finite element model files referenced in this report.

TABLE OF CONTENTS

APPROVAL RECORD **2**
DESCRIPTION OF CHANGES **3**
SUMMARY / CONCLUSIONS **4**
REQUIREMENTS **5**
APPLICABILITY **6**
CONFORMITY STATEMENT **7**
TOOLS AND METHODOLOGY **8**
CALCULATION FILES **8**
FEM BASIS, FE MODEL & LOADS FILES **11**
TABLE OF CONTENTS **12**
1 INTRODUCTION **21**
1.1 Parts and Assemblies 22
1.2 Parts and Assemblies Covered, Skins 23
1.3 Parts and Assemblies Covered, Spars 25
1.4 Parts and Assemblies Covered, Spar Splices 26
1.5 Parts and Assemblies Covered, Ribs 27
1.6 Parts and Assemblies Covered, Trailing Edge 28
1.7 Parts and Assemblies Covered, Aileron Hinges: Aileron-Mounted Brackets 29
1.8 Parts and Assemblies Covered, Aileron Hinges: Wing-Mounted Brackets 30
1.9 Parts and Assemblies Covered, Flettner Tab Installation 31
1.10 Parts and Assemblies Covered, LE Balance Mass Assy 32
2 MAIN BODY **33**
2.1 Aileron Control System 33
2.2 Material Data 34
2.2.1.1 Metallic Materials 34
2.2.2 Composite Materials 34
2.2.2.1 Basic ply properties 34
2.2.2.2 Equivalent lamina properties 34
2.2.2.3 Strength allowables 35
2.2.2.4 Bearing allowables 36
2.2.2.5 Fastener Allowables NAS1921 36
2.2.2.6 Bearing bypass 36
2.3 Load Case Selection 37
2.3.1 Aerodynamic Loading 37
2.3.2 Aileron Hinge Moment Correction 38
2.3.3 Inertia Loads 39
2.3.3.1 Aileron Mass 39
2.3.3.2 Inertia Load Cases 39
2.3.4 Wing Enforced Displacements 40
2.3.5 Trailing Edge Panel Loads 41
2.3.6 Temperature Effects on Loading and Allowables 44
2.3.7 Flight Control System (FCS) 45

2.3.8 Loading Id Register and DFEM Applicability ... 48
2.4 DFEM Descriptions ... 49
2.4.1 Aileron Installation ... 50
2.4.2 Mass Balance Support ... 51
2.4.3 Flettner Trim Tab ... 53
2.4.4 Front Spar Hinge Fittings ... 54
2.4.4.1 Mid Hinge Fitting FEM ... 54
2.4.4.2 Outboard Hinge Fitting FEM ... 55
2.4.5 Support Structure ... 56
2.4.5.1 Inboard Hinge Support DFEM ... 56
2.4.5.2 Mid Hinge Support DFEM ... 57
2.4.5.3 Outboard Hinge Support DFEM ... 58
2.5 Aileron Analysis ... 59
2.5.1 Introduction ... 59
2.5.2 Buckling Policy ... 62
2.5.3 Failsafe Aspects ... 63
2.5.4 Organization of Calculation files ... 64
2.5.5 PESS Analysis Notes ... 65
2.5.5.1 Panel Load Extraction using PESS ... 66
2.5.5.2 Joint Load Extraction using PESS Panel Edge Loads ... 68
2.5.6 Front Spar ... 70
2.5.6.1 FE Models, Calculation Files, Geometry and Materials ... 71
2.5.6.2 Load Case Applicability ... 72
2.5.6.3 Web Panels Load Extraction ... 73
2.5.6.4 Web Strength under Biaxial Loading ... 74
2.5.6.5 Web Buckling and Lightening Hole Strength ... 76
2.5.6.6 Web Vertical Stiffeners ... 78
2.5.6.6.1 Web Vertical Stiffeners Minimum Inertia check ... 79
2.5.6.6.2 Web Vertical Stiffeners Crippling Check ... 80
2.5.6.7 Upper Spar Cap ... 82
2.5.6.8 Lower Spar Cap ... 85
2.5.6.9 Web Cut-out at Bay 3 ... 87
2.5.6.10 Front Spar Splice ... 94
2.5.6.10.1 Splice Fastener Details and Allowables ... 95
2.5.6.10.2 Loading at Splice Centre ... 97
2.5.6.10.3 Splice Fastener Loading ... 98
2.5.6.10.4 Splice Fastener RFs ... 102
2.5.6.10.5 Splice Net Section Area Strength ... 103
2.5.6.11 Inboard Support Hinge Lugs ... 105
2.5.6.12 Rod 9 Control arm ... 108
2.5.7 Front Spar Hinge Fittings ... 116
2.5.7.1 Calculation File, Geometry and Materials ... 117
2.5.7.2 Load Case Applicability ... 117
2.5.7.3 Mid Hinge Fitting ... 118
2.5.7.3.1 Mid Fitting Body Section Stress Levels ... 119
2.5.7.3.2 Mid Fitting Body FE Linear Buckling Check ... 126
2.5.7.3.3 Mid Hinge Fitting to Front Spar Joint ... 127
2.5.7.4 Outboard Hinge Fitting ... 130
2.5.7.4.1 OB Hinge Fitting Body Section Stress Levels ... 131
2.5.7.4.2 OB Hinge Fitting Body FE Linear Buckling Check ... 136
2.5.7.4.3 OB Hinge Fitting Hinge Lugs ... 137
2.5.7.4.4 OB Hinge Fitting to Front Spar Joint ... 140
2.5.8 Rear Spar ... 143

2.5.8.1 Calculation File, Geometry and Materials 144
2.5.8.2 Load Case Applicability 144
2.5.8.3 Web Panels Load Extraction 145
2.5.8.4 Rear Spar Web Strength under Biaxial Loading 146
2.5.8.5 Web Buckling 148
2.5.8.6 Upper Spar Cap 150
2.5.8.7 Lower Spar Cap 152
2.5.9 Aileron Box Upper Skin 155
2.5.9.1 Calculation Files, Geometry and Materials 156
2.5.9.2 Load Case Applicability 156
2.5.9.3 Load Extraction for Upper Skin 157
2.5.9.4 Panel Strength under Biaxial Loading 158
2.5.9.5 Buckling Analysis Details 161
2.5.9.6 Post Buckling of Upper Skin Panels 164
2.5.9.7 Joint with Front spar 173
2.5.9.8 Joint with Rear Spar 176
2.5.10 Aileron Box Lower Skin 179
2.5.10.1 Calculation File, Geometry and Materials 181
2.5.10.2 Load Case Applicability 181
2.5.10.3 Load Extraction for Lower Skin. 182
2.5.10.4 Panel Strength under Biaxial Loading 183
2.5.10.5 Panel Buckling Analysis 186
2.5.10.6 Post Buckling of Lower Skin Panels 190
2.5.10.7 Joint with Front spar 191
2.5.10.8 Joint with Rear Spar 195
2.5.11 Aileron Box Ribs 198
2.5.11.1 Calculation File, Geometry and Materials 200
2.5.11.2 Load Case Applicability 202
2.5.11.3 Load Extraction 202
2.5.11.4 Rib Web Strength under Biaxial Loading 203
2.5.11.5 Web Buckling and Lightening Hole Strength 206
2.5.11.6 Strength & Stability of Upper and Lower Flanges 209
2.5.11.7 Rib Flange to Upper Skin Joint 213
2.5.11.8 Rib Flange to Lower Skin Joint 219
2.5.11.9 Rib to Front Spar Joints 222
2.5.11.9.1 Rib 1a to Front spar Joint 223
2.5.11.9.2 Rib 2 to 12 Front Spar Joints 229
2.5.11.10 Rib Joints to Rear Spar 235
2.5.11.10.1 Rib to Inboard Rear Spar Joint 236
2.5.11.10.2 Rib to Outboard Rear Spar Joints 241
2.5.12 Leading Edge (Mass Balance) 243
2.5.12.1 Load Case Applicability 245
2.5.12.2 Leading Edge Upper Skin 246
2.5.12.2.1 Geometry and Properties 246
2.5.12.2.2 Load Extraction for Upper Skin 247
2.5.12.2.3 Skin Panel Strength under Biaxial Loading 248
2.5.12.2.4 Skin Panel Buckling Analysis 250
2.5.12.2.5 Upper Skin Joint to Front Spar 253
2.5.12.3 Leading Edge Lower Skin 257
2.5.12.3.1 Geometry and Properties 257
2.5.12.3.2 Load Extraction for Lower Skin 258
2.5.12.3.3 Skin Panel Strength under Biaxial Loading 259
2.5.12.3.4 Skin Panel Buckling Analysis 261

2.5.12.3.5 Lower Skin Joint to Front Spar ... 264
2.5.12.4 Leading Edge Ribs ... 268
2.5.12.4.1 Rib Static Strength ... 270
2.5.12.4.2 LE Rib Web Buckling ... 274
2.5.12.4.3 Rib Joint to Front Spar ... 276
2.5.12.5 Mass Balances ... 279
2.5.12.5.1 Static Strength of Balance Masses ... 280
2.5.12.5.2 Attachments to Upper and Lower Skins ... 281
2.5.13 Trailing Edge ... 288
2.5.13.1 Analysis method for the TE area ... 291
2.5.13.1.1 Joint between the TE panels and the U-channel ... 291
2.5.13.1.2 Typical area of the TE panels (other than splice area) ... 292
2.5.13.2 Analysis of the splice area between the U-channel and the TE panels ... 293
2.5.13.2.1 Aerodynamic pressure effect ... 293
2.5.13.2.2 Iso-elongation loads ... 294
2.5.13.2.3 Total fastener loads (including thermal) ... 295
2.5.13.2.4 RF Summary tables – Splice area ... 296
2.5.13.2.5 Detailed analysis of the most critical location ... 299
2.5.13.3 Analysis of the typical area of the TE panels (other than splice area) ... 309
2.5.13.3.1 Detailed analysis of the most critical location ... 311
2.5.14 Trim Tab ... 312
2.5.14.1 Calculation File, FEM, Geometry and Materials ... 313
2.5.14.2 Load Case Applicability ... 313
2.5.14.3 Trim Tab Machined Body ... 314
2.5.14.3.1.1 Trim Tab Body Section Stress Levels ... 314
2.5.14.3.1.2 Trim Tab Body Body FE Linear Buckling Check ... 323
2.5.14.4 Trim Tab Control arms ... 324
2.5.14.4.1 Lugs and Pins ... 325
2.5.14.4.2 Section at Root of the Control Arms ... 328
2.5.14.5 Piano hinge ... 331
2.5.14.5.1 Trim Tab Skins ... 339
2.5.15 Aileron Support Brackets ... 340
2.5.15.1 Calculation File, Geometry and Materials ... 343
2.5.15.2 Load Case Applicability ... 343
2.5.15.3 Inboard Support Bracket ... 344
2.5.15.3.1 IB Hinge Bearing Strength ... 345
2.5.15.3.2 IB Bracket body Section Stress Levels ... 346
2.5.15.3.3 IB Bracket Body FE Linear Buckling Check ... 351
2.5.15.3.4 IB Support Bracket Hinge Lug/Pin Strength ... 353
2.5.15.3.5 IB Support Bracket to Wing box Joint ... 357
2.5.15.4 Mid Support Bracket ... 361
2.5.15.4.1 Mid Hinge Bearing Strength ... 362
2.5.15.4.2 Mid Bracket body Section Stress Levels ... 363
2.5.15.4.3 Mid Bracket Body FE Linear Buckling Check ... 367
2.5.15.4.4 Mid Support Bracket Hinge Lug Strength ... 368
2.5.15.4.5 Mid Support Bracket to Wing box Joint ... 372
2.5.15.5 Outboard Support Bracket ... 375
2.5.15.5.1 OB Hinge Bearing Strength ... 376
2.5.15.5.2 OB Bracket Body Section Stress Levels ... 377
2.5.15.5.3 OB Bracket Body FE Linear Buckling Check ... 381
2.5.15.5.4 OB Support Bracket Hinge Lug Strength ... 382
2.5.15.5.5 OB Support Bracket to Wing box Joint ... 386

3 LIST OF RESERVE FACTORS 389
3.1 Aileron Box Upper Skin 389
3.2 Aileron Box Lower Skin 390
3.3 Aileron Front Spars 391
3.4 Front Spar Hinge Fittings 392
3.5 Aileron Rear Spar 393
3.6 Aileron Box Ribs 394
3.7 Trailing Edge 395
3.8 Trim Tab 396
3.9 LE Mass Balance Assembly 397
3.10 Aileron Support Structure 398
4 TABLE OF SYMBOLS 399
5 TABLE OF REFERENCES 402
6 APPENDICES 403
6.1 Appendix A Material Data 403
6.2 Appendix B Aileron Instalation DFEM - Change log 412
6.3 Appendix C Aerodynamic Pressure Contour Plots 414
6.4 Appendix D Aileron Hinge Moment 417
6.5 Appendix E Geometric Data for Calculation File [2], Aileron Box 419
6.6 Appendix F Geometric Data for Calculation File [8], Front spar 422
6.7 Appendix G Geometric Data for Calculation File [9] 426
6.8 Appendix H Geometric Data for Calculation File [12] 428
6.9 Appendix I Geometric Data for Calculation File [13] 430
6.10 Appendix J Geometric Data for Calculation File [14] 432
6.11 Appendix K Aileron Box PESS Groups 434
6.12 Appendix L Example Calculation of Neuber Correction of FEM Peak Stress 442
6.13 Appendix M LE balance mass, model mass verification. 445
6.14 Appendix N Front Spar Splice in Bay Four, 2D bolt Group 446
6.15 Appendix O Fastener Allowables for NAS 1921M 449

TABLE OF FIGURES

Figure 1: Location of Analysis Region in Relation to the Total Aircraft Structure 21
Figure 1-2 Aileron in Context of Wing. 22
Figure 1-3 Upper Skins in Context of Aileron 23
Figure 1-4 Lower Skins in Context of Aileron 24
Figure 1-5 Spars in Context of Aileron 25
Figure 1-6 Spar Splices in Context of Fwd Spars 26
Figure 1-7 Ribs in Context of Aileron 27
Figure 1-8 Trailing Edge in Context of Aileron 28
Figure 1-9 Aileron-Side Hinges in Context of Aileron 29
Figure 1-10 Wing-Side Hinges in Context of LH Aileron 30
Figure 1-11 Flettner Tab Installation in Context of LH Aileron 31
Figure 1-12 Counterbalance Weights in Context of LH Aileron 32
Figure 2-1 Aileron angular movement range. 33
Figure 2-2: Bearing-bypass curves for Aileron TE NAS 1921 blind rivets 36
Figure 2-3: Location of wing bending enforced displacement interfaces 40
Figure 2-4: Trailing edge (TE) panel loading. 41
Figure 2-5: Location where temperature induced loading is considered. 44
Figure 2-6 Location of FCS load introduction interfaces 45
Figure 2-7 Aileron zone where FCS loading is applicable. 46
Figure 2-8 Aileron zone where FCS loading is applicable. 47
Figure 2-9 Overview of FE models used in this report. 50
Figure 2-10 Aileron installation FEM [1] 50
Figure 2-11 Mass balance support DFEM inboard section 51
Figure 2-12 Overview of trim tab FEM [11]. 53
Figure 2-13 Overview of front spar mid hinge fitting, FEM [8]. 54
Figure 2-14 Overview of front spar OB hinge fitting, FEM [9]. 55
Figure 2-15 Overview of IB support bracket, FEM [14]. 56
Figure 2-16 Overview of mid support bracket, FEM [15]. 57
Figure 2-17 Overview of OB support bracket, FEM [16]. 58
Figure 2-18 Aileron principal structural components. 59
Figure 2-19 The aileron (torque) box 60
Figure 2-20 Typical sections through the aileron 61
Figure 2-21 LHS flettner control rods 63
Figure 2-22 Typical worksheet arrangement of calculation files 64
Figure 2-23 Determining joint loads from PESS load extraction files. 69
Figure 2-24 Front spar web bay identification. 70
Figure 2-25 Front inboard spar sub web bay identification. 71
Figure 2-26 Definition of front spar load case sets. 72
Figure 2-27 Front spar panel forces orientation. 73
Figure 2-28 Front spar critical peak ultimate biaxial stress for bay1 & 2 75
Figure 2-29 Front spar section showing single and double sided stiffeners 78
Figure 2-30 Front spar caps, typical PESS property input (values for upper cap bay 5) 82
Figure 2-31 Location and arrangement of the front spar cut-out at bay 3 87
Figure 2-32 Front spar web cut-out, free-body details 88
Figure 2-33 Front spar web cut-out, free-body 2710101, LC2001 89
Figure 2-34 Location and arrangement of the FS splice at bay 94
Figure 2-35 Front spar splice in bay 4, key for rows and column Id's 95
Figure 2-36 Front spar splice, free-body details 97
Figure 2-37 Front spar splice additional loading from box skin panels 101
Figure 2-38 IB aileron hinge joint arrangement 105
Figure 2-39 Outboard aileron support bracket, idealized lug and pin dimensions. 106

Figure 2-40 Front spar sections at front spar control arm (rod 9). 108
Figure 2-41 Front spar section at control arm root. 109
Figure 2-42 Mesh details at the front spar to rod 9 interface. 110
Figure 2-43 Front spar discrete hinge fittings. 116
Figure 2-44 Mid front spar hinge fitting. 118
Figure 2-45 Front spar mid hinge fitting FEM “stress” zones. 119
Figure 2-46 Mid fitting central zone, surface ultimate stress levels: minor principal stress. 122
Figure 2-47 Mid fitting central zone, solid element centre stress levels: min principal stress 123
Figure 2-48 Mid fitting outer flange zone, surface element ultimate stress levels: minor principal stress. 124
Figure 2-49 Mid fitting outer flange zone, flange centre ultimate stress levels: min principal stress. 125
Figure 2-50 Fitting body linear buckling 1st mode, critical ED + Aero case 3002 126
Figure 2-51 Hinge fitting to front spar joint details. 127
Figure 2-52 Outboard front spar hinge fitting. 130
Figure 2-53 Front spar outboard hinge fitting FEM “stress” zones. 131
Figure 2-54 OB Fitting, surface element stress levels: minimum principal stress, FEM 9. 134
Figure 2-55 OB hinge fitting, solid element centre stress levels: min principal stress 135
Figure 2-56 Fitting body linear buckling 1st mode, critical ED + Aero case 3002 136
Figure 2-57 Outboard aileron support bracket, idealized lug and pin dimensions. 138
Figure 2-58 Hinge fitting to front spar joint details. 140
Figure 2-59 Rear spar web bay identification. 143
Figure 2-60 Rear spar panel forces and orientation. 145
Figure 2-61 Aileron box upper skin (Part-5576024305/-) 155
Figure 2-62 Aileron box upper skin bays and PESS groups 156
Figure 2-63 Upper main skin panel forces, key and orientation. 157
Figure 2-64 Upper skin, location of critical applied tension stress. 159
Figure 2-65 Upper skin, location of critical applied compression stress. 160
Figure 2-66 Arrangement of panel “upright” stiffeners. 167
Figure 2-67 Upper main skin, details of land thickness at the front spar joint 173
Figure 2-68 Upper main skin, details of land thickness at the rear spar joint 176
Figure 2-69 Aileron box lower skin (Part-5576024307/A) 179
Figure 2-70 Aileron box lower skin bays and PESS groups 180
Figure 2-71 Lower main skin panel forces, key and orientation. 182
Figure 2-72 Lower skin, location of critical applied tension stress. 184
Figure 2-73 Lower skin, location of critical applied compression stress. 185
Figure 2-74 Lower main skin, details of land thickness at the front spar joint 191
Figure 2-75 Lower main skin, details of land thickness at the rear spar joint 195
Figure 2-76 Typical aileron box ribs 199
Figure 2-77 Aileron box ribs and PESS groups 200
Figure 2-78 Rib panel forces key and orientation. 202
Figure 2-79 Typical web buckling idealisation (Rib 4 shown) 206
Figure 2-80 Typical rib upper flange to upper skin joint (rib 3 shown) 213
Figure 2-81 Relationship between rib web panel, edge loads and reaction in to skin. 214
Figure 2-82 Typical rib lower flange to lower skin joint (rib 5 shown) 219
Figure 2-83 Relationship between rib web panel, edge loads and reaction in to skin. 220
Figure 2-84 Arrangement of rib to front spar joints. 222
Figure 2-85 Rib 1a to front spar joint details 223
Figure 2-86 Rib 1a to front spar free bodies. 225
Figure 2-87 Typical rib to front spar joints. 229
Figure 2-88 Typical PESS panel for rib webs and definition of edge loads. 232
Figure 2-89 Rib to rear spar joints 235
Figure 2-90 Typical rear spar joint loading (rib 2 shown) 236

Figure 2-91 Typical PESS panel for rib webs and definition of edge loads. 238
Figure 2-92 Rib to rear spar joint dimensions (inboard part) 238
Figure 2-93 Rib to rear spar joint dimensions 241
Figure 2-94 Rib mesh and definition of PESS panel loading definitions 242
Figure 2-95 Leading edge assembly, skins, ribs and mass balance weight. 244
Figure 2-96 Leading edge assembly, overview of DFEMs 245
Figure 2-97 LE upper skin panel forces, key and orientation. 247
Figure 2-98 LE upper skin to front spar joint. 253
Figure 2-99 LE upper skin panel forces, key and orientation. 258
Figure 2-100 LE upper skin to front spar joint. 264
Figure 2-101 Assembly of LE ribs with front spar. 269
Figure 2-102 Comparison of rib mesh, aileron FEM [3 to 6] and LE balance assy FEM [10] 270
Figure 2-103 Flange deformation due to beam curvature 272
Figure 2-104 Typical web buckling idealisation (Rib 6 shown) 274
Figure 2-105 LE Rib to front spar joint. (Rib 6 shown, typical for all others) 276
Figure 2-106 LE mass balance weights 279
Figure 2-107 LE mass balance weights, joint to LE skins. 282
Figure 2-108 LE upper skin to mass balance joint, ultimate stress plot of critical value 285
Figure 2-109 LE lower skin to mass balance joint, ultimate stress plot of critical value 286
Figure 2-110 LE mass balance assy, linear buckling 1st mode, critical inertia case 3056 287
Figure 2-111: Aileron trailing edge panels 288
Figure 2-112: TE panels' installation 288
Figure 2-113: TE panels design information 289
Figure 2-114: X direction of material coordinate system 290
Figure 2-115: U-channel effective area 291
Figure 2-116: Axial load in U-channel flanges – FEM results – Ultimate Load 299
Figure 2-117: Ny running loads in the TE – FEM results – Ultimate Load 299
Figure 2-118: Nxy running loads in the TE – FEM results – Ultimate Load 300
Figure 2-119: Nx running loads in the TE – FEM results – Ultimate Load 300
Figure 2-120: Bearing-bypass interaction for positive and negative bypass load 308
Figure 2-121 Trim tab assembly. 313
Figure 2-122 Trim tab body FEM "stress" zones. 314
Figure 2-123 Trim tab inboard zone, surface ultimate stress levels: minor principal stress. 319
Figure 2-124 Trim tab centre zone, surface ultimate stress levels: minor principal stress. 320
Figure 2-125 Trim tab lug arms zone, surface ultimate stress levels: minor principal stress. 321
Figure 2-126 Trim tab outboard zone, surface ultimate stress levels: minor principal stress. 322
Figure 2-127 Trim tab body linear buckling 1st mode, critical ED + Aero case 3003. 323
Figure 2-128 Trim tab body linear buckling 2nd mode, critical ED + Aero case 3003. 323
Figure 2-129 Arrangement of trim tab control arms and rods. 324
Figure 2-130 Lug geometry and material details 325
Figure 2-131 Root section geometry and material details 328
Figure 2-132 Trim tab piano hinge. 331
Figure 2-133 Trim tab piano hinge modelling details for FEM [11] 332
Figure 2-134 Trim tab piano hinge, graphic representation of loading. 333
Figure 2-135 Piano hinge tangs, idealized as two lugs. 335
Figure 2-136 Trim tab skins, "lower aerodynamic surface". 339
Figure 2-137 Wing to aileron support Brackets 341
Figure 2-138 Wing to aileron support Brackets 342
Figure 2-139 Support bracket FEM "stress" zones. 342
Figure 2-140 Inboard support bracket. 344
Figure 2-141 Bracket plain sections, surface stress levels: maximum principal stress, FEM [14]. 348

Figure 2-142 Bracket plain sections, flange centre stress levels: minimum principal stress, FEM 14 349
Figure 2-143 Bracket Kt zones, surface stress levels: maximum principal stress, FEM 14..... 350
Figure 2-144 Bracket Body linear buckling 1st mode, critical ED + Aero case (LC3002), FEM [14] 351
Figure 2-145 Bracket Body linear buckling 1st mode, critical inertia case (LC3053), FEM [14]... 352
Figure 2-146 Bracket Body linear buckling 1st mode, critical inertia case 3054, FEM [14] 352
Figure 2-147 Inboard aileron support bracket, idealized lug and pin dimensions..... 354
Figure 2-148 IB support bracket to front spar joint details..... 357
Figure 2-149 Mid support bracket..... 361
Figure 2-150 Mid bracket plain sections, surface ultimate stress levels: minor principal stress. 365
Figure 2-151 Mid bracket plain sections, flange centre ultimate stress levels: min principal stress 366
Figure 2-152 Mid Bracket Body linear buckling 1st mode, critical ED + Aero case (3002)..... 367
Figure 2-153 Mid aileron support bracket, idealized lug and pin dimensions. 369
Figure 2-154 Mid support bracket to wing box joint details..... 372
Figure 2-155 Outboard support bracket..... 375
Figure 2-156 OB bracket plain sections, surface stress levels: major principal stress. 379
Figure 2-157 OB bracket plain sections, flange centre stress levels: minimum principal stress, FEM [16]..... 380
Figure 2-158 OB bracket linear buckling 1st mode, critical ED + Aero case (3002) 381
Figure 2-159 Outboard aileron support bracket, idealized lug and pin dimensions. 383
Figure 2-160 OB support bracket to wing box joint details..... 386
Figure 3-1 Aileron Upper Box Skin Minimum RF Locations 389
Figure 3-2 Aileron Lower Box Skin Minimum RF Locations 390
Figure 3-3 Front Spar Minimum RF Locations 391
Figure 3-4 Front Spar Hinge Fittings Minimum RF Locations 392
Figure 3-5 Spar Bays Minimum RF Locations 393
Figure 3-6 Main and Nose Ribs Minimum RF Locations..... 394
Figure 3-7 Main and Nose Ribs Minimum RF Locations..... 395
Figure 3-8 Trim Tab Minimum RF Locations 396
Figure 3-9 Aileron Balance Mass Assembly RF Locations 397
Figure 3-10 Aileron Support Structure RF Locations..... 398
Figure 6-1: Aerodynamic (limit) pressure contour plots for LC: RP-MT12-502-AN225. 414
Figure 6-2: Aerodynamic (limit) pressure contour plots for LC: VG-MF-003_A5. 414
Figure 6-3: Aerodynamic (limit) pressure contour plots for LC: VG-MF-402_AN6. 415
Figure 6-4: Aerodynamic (limit) pressure contour plots for LC: RP-MT51-003-A066. 415
Figure 6-5: Aerodynamic (limit) pressure contour plots for LC: RP-MT12-202-A171. 416
Figure 6-6 Hinge moment calculation, nomenclature and sign convention (ref [12], fig 5.2) 417
Figure 6-7: Front spar geometry, “splice joint” related data for calculation file [8]..... 423
Figure 6-8 Neuber Hyperbola..... 442
Figure 6-9 Neuber corrected FEM_{peak} stress 443

1 INTRODUCTION

This report contains the detailed stress analysis of the PC-24 Wing Aileron, Trim Tab Structure and Support Brackets. The objective of the analysis is to show compliance to the requirements. The scope of the content covers static analysis.
The following sub-sections contain pictorial and parts listings which define the extent of the structure being justified.
The figure below shows the Aileron in the context of the overall wing assembly.

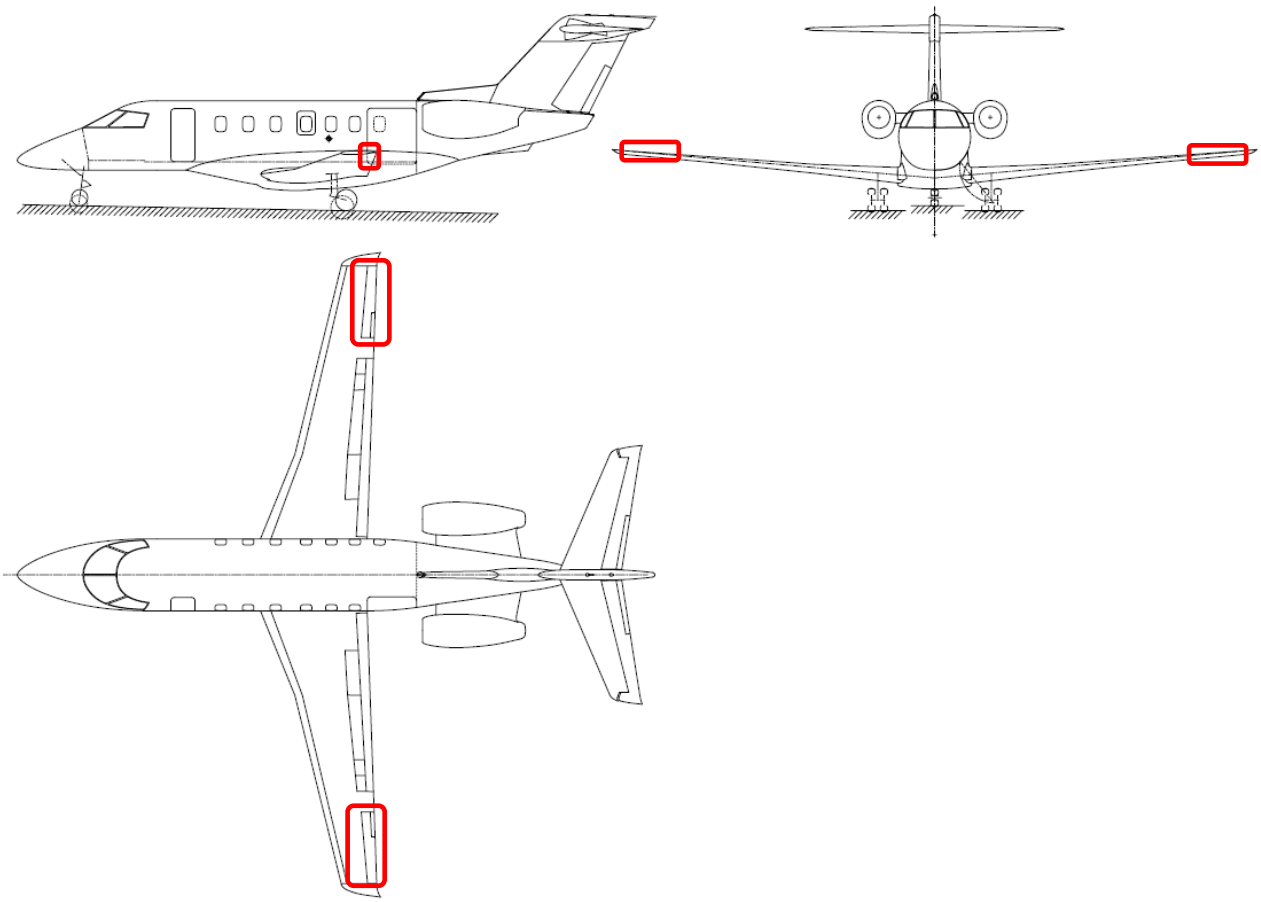

Figure 1: Location of Analysis Region in Relation to the Total Aircraft Structure

1.1 Parts and Assemblies

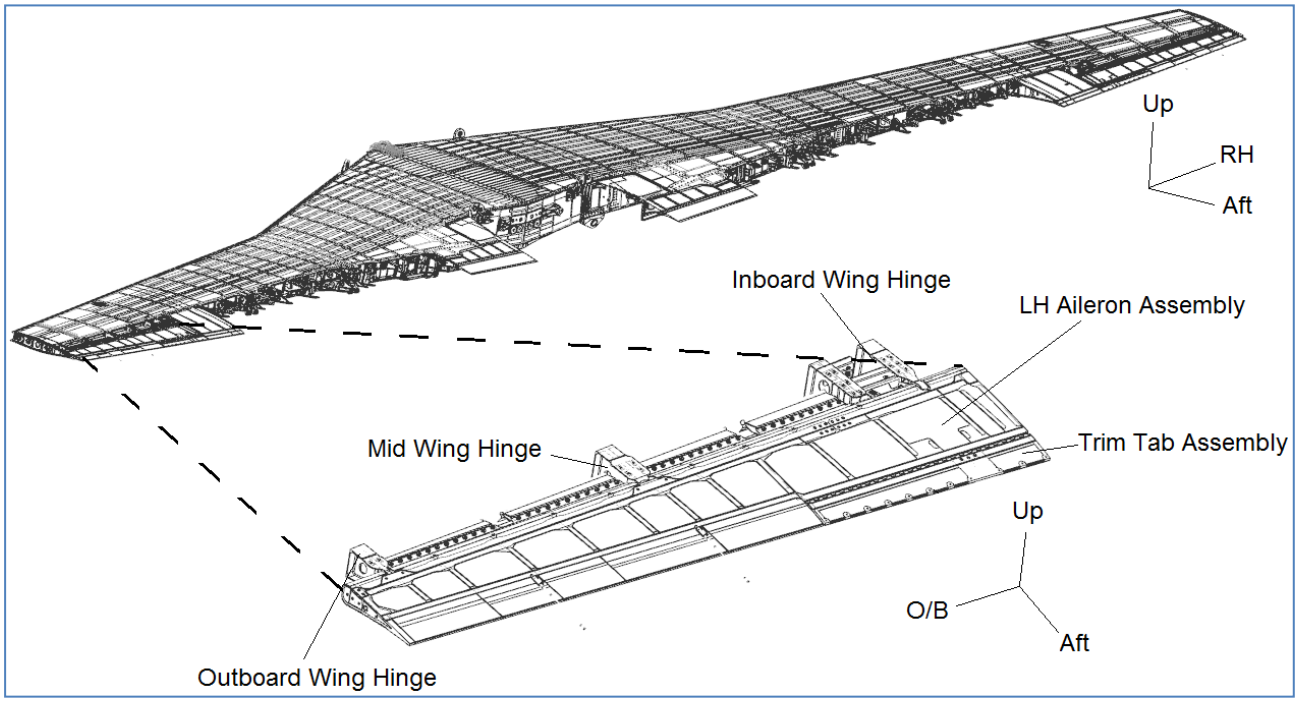

Figure 1-2 Aileron in Context of Wing.

Part Number	Rev	Title	Scope of Analysis
557.10.24.109/10	B	Wing Structure LH/RH	Partial
557.60.24.911/12	C	Aileron Installation	Partial
557.60.24.913/14	C	Aileron and Tab	Complete
557.60.24.915/16	-	Flettner Tab Aileron Assy LH/RH	Partial

Table 1-1 Top level assemblies.

1.2 Parts and Assemblies Covered, Skins

The aileron upper skins are shown in the following figure. Each part is labelled as an item 1 – 5.

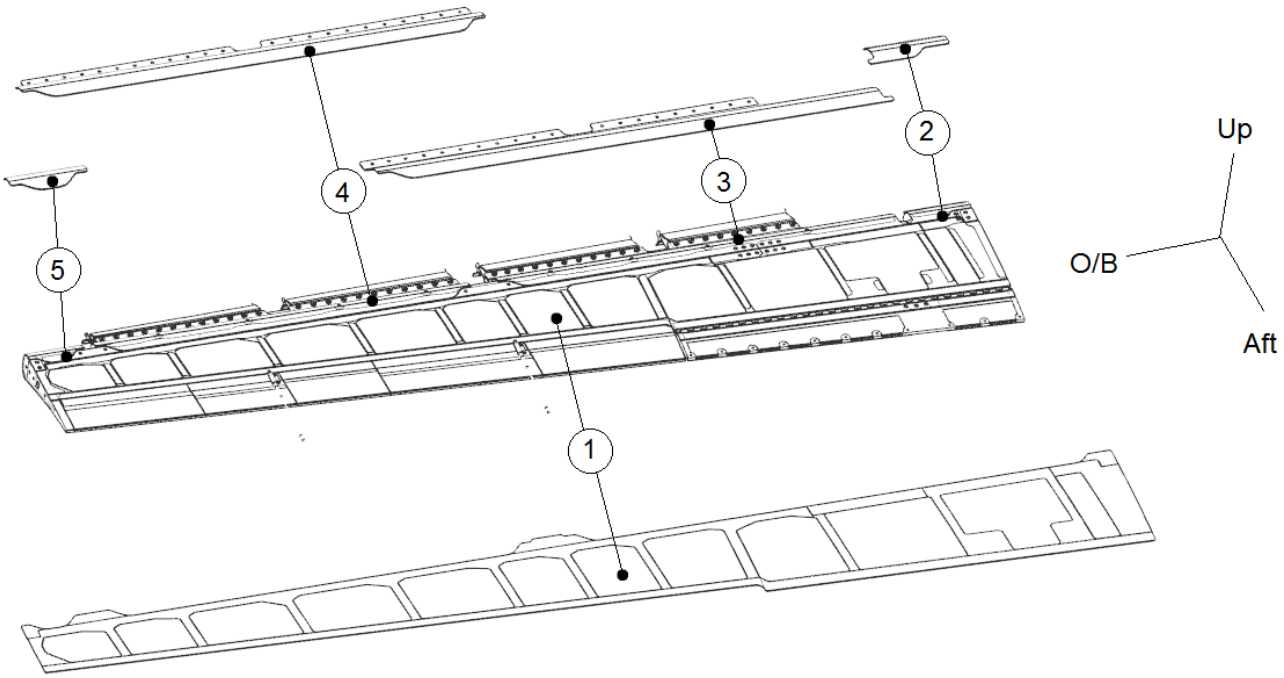

Figure 1-3 Upper Skins in Context of Aileron

Item	Part Number	Rev	Title	Scope of Analysis
1	557.60.24.305/06	-	SKIN, AILERON, UPPER, AFT, LH/RH	Complete
2	557.60.24.193/94	-	SKIN, LE, UPR 1, AILERON, LH/RH	Complete
3	557.60.24.425/26	-	SKIN, LE, UPR 2, AILERON, LH/RH	Complete
4	557.60.24.427/28	-	SKIN, LE, UPR 3, AILERON, LH/RH	Complete
5	557.60.24.429/30	-	SKIN, LE, UPR 4, AILERON, LH/RH	Complete

Table 1-2 Upper Skins Analysed in this Report

The aileron lower skins are shown in the following figure. Each part is labelled as an item 1 – 5.

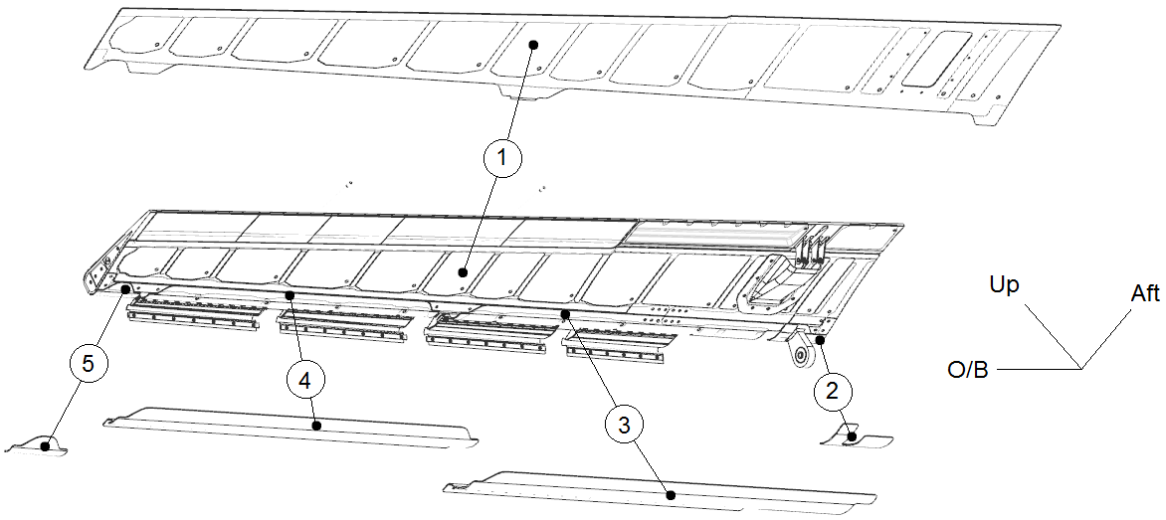

Figure 1-4 Lower Skins in Context of Aileron

Item	Part Number	Rev	Title	Scope of Analysis
1	557.60.24.307/08	-	SKIN, AILERON, LOWER, AFT, LH/RH	Complete
2	557.60.24.195/96	A	SKIN, LE, LWR 1, AILERON, LH/RH	Complete
3	557.60.24.431/32	B	SKIN, LE, LWR 2, AILERON, LH/RH	Complete
4	557.60.24.433/34	-	SKIN, LE, LWR 3, AILERON, LH/RH	Complete
5	557.60.24.435/36	-	SKIN, LE, LWR 4, AILERON, LH/RH	Complete

Table 1-3 Lower Skins Analysed in this Report

1.3 Parts and Assemblies Covered, Spars

The aileron spars are shown in the following figure. The upper skin is made transparent, and the spars are colored. Each part is labelled as an item 1 – 4.

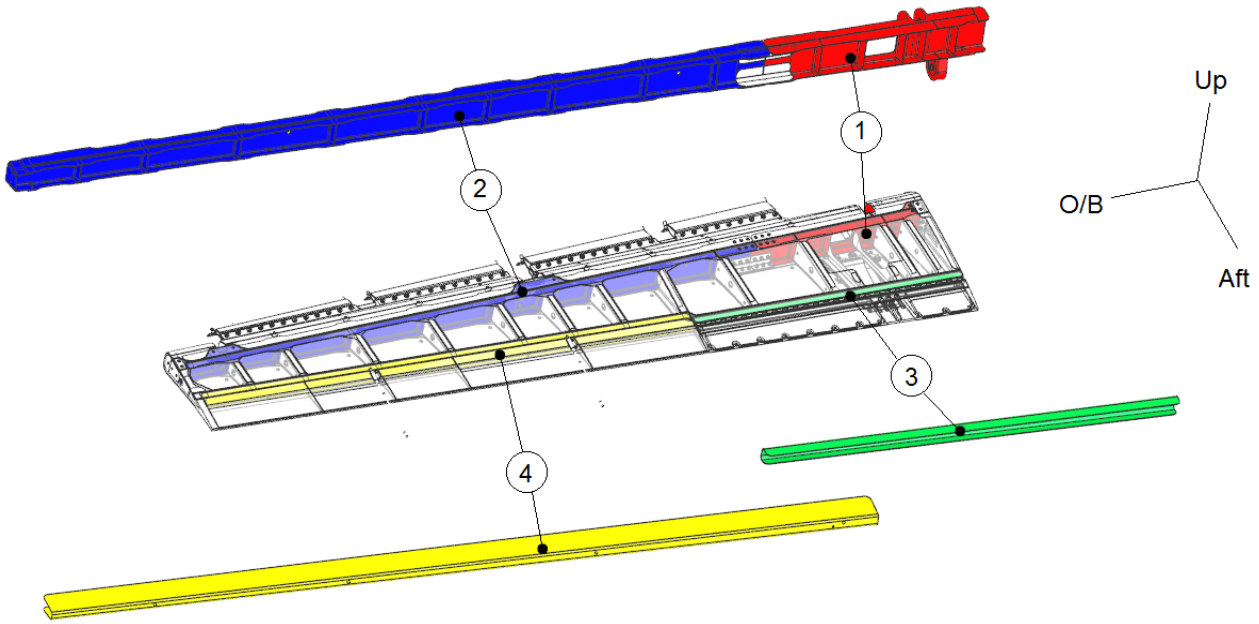

Figure 1-5 Spars in Context of Aileron

Item	Part Number	Rev	Title	Scope of Analysis
1	557.60.24.397/98	-	SPAR, INBD, FWD, AILERON, LH/RH	Complete
2	557.60.24.315/16	A	OUTBD SPAR, AILERON, FWD, LH/RH	Complete
3	557.60.24.317/18	-	U-CHANNEL, SPAR, AILERON, LH/RH	Complete
4	557.60.24.401/02	-	U-CHANNEL, TE, AILERON, LH/RH	Complete

Table 1-4 Spars Analysed in this Report

1.4 Parts and Assemblies Covered, Spar Splices

The aileron forward spar splices are shown in the following figure in the context of the forward spars. Each part is labelled as an item 1 – 4.

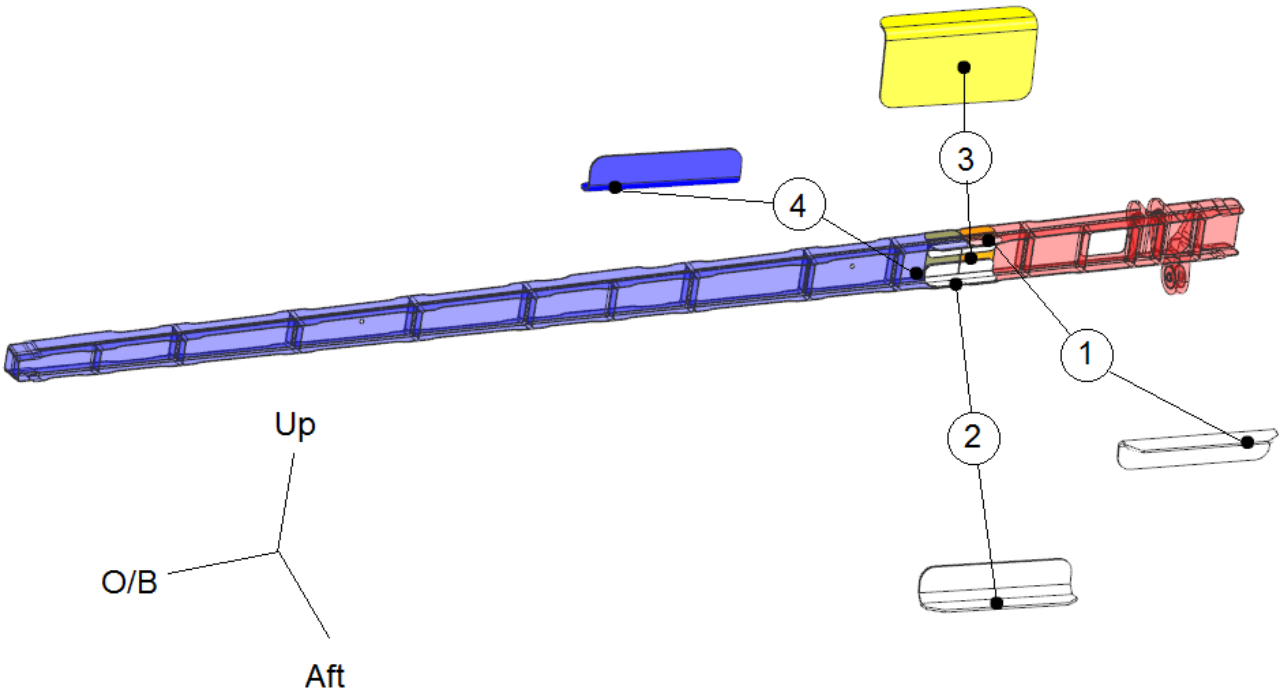

Figure 1-6 Spar Splices in Context of Fwd Spars

Item	Part Number	Rev	Title	Scope of Analysis
1	557.60.24.389/90	B	SPLICE, UPR, AFT, LH/RH	Complete
2	557.60.24.391/92	-	SPLICE, LWR, AFT, LH/RH	Complete
3	557.60.24.393/94	-	SPLICE, UPR, FWD, LH/RH	Complete
4	557.60.24.395/96	B	SPLICE, LWR, FWD, LH/RH	Complete

Table 1-5 Fwd Spar Splices Analysed in this Report

1.5 Parts and Assemblies Covered, Ribs

The aileron ribs—closeout ribs, main ribs, and nose ribs—are shown in the following figure. Closeouts ribs are colored green, main ribs are colored yellow, and nose ribs are colored blue. Each part is labelled as an item 1 – 22.

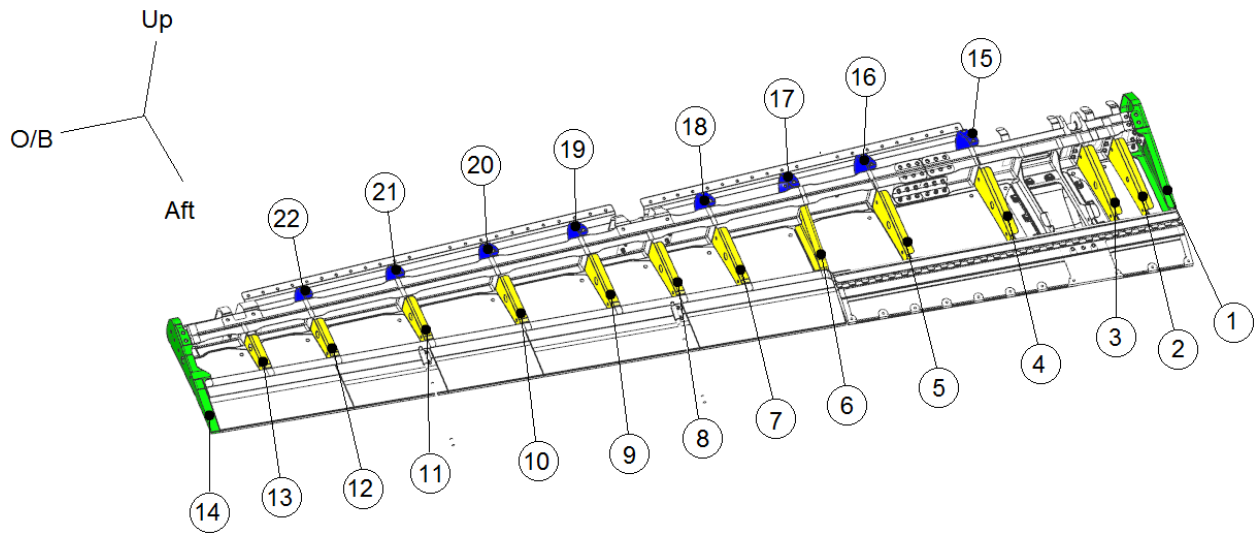

Figure 1-7 Ribs in Context of Aileron

Item	Part Number	Rev	Title	Scope of Analysis
1	557.60.24.321/22	A	RIB 1, AILERON, LH/RH	Complete
2	557.60.24.385/86	-	RIB 1A, AILERON, LH/RH	Complete
2a	557.60.24.325/26	-	RIB 2, AILERON, LH/RH	Complete
2b	557.60.24.351/52	-	RIB 2B, AILERON, LH/RH	Complete
3	557.60.24.353/54	-	RIB 2, AILERON, LH/RH	Complete
4	557.60.24.327/28	-	RIB 3, AILERON, LH/RH	Complete
5	557.60.24.329/30	-	RIB 4, AILERON, LH/RH	Complete
6	557.60.24.331/32	B	RIB 5, AILERON, LH/RH	Complete
7	557.60.24.333/34	-	RIB 6, AILERON, LH/RH	Complete
8	557.60.24.335/36	-	RIB 7, AILERON, LH/RH	Complete
9	557.60.24.337/38	-	RIB 8, AILERON, LH/RH	Complete
10	557.60.24.339/40	-	RIB 9, AILERON, LH/RH	Complete
11	557.60.24.341/42	-	RIB 10, AILERON, LH/RH	Complete
12	557.60.24.343/44	A	RIB 11, AILERON, LH/RH	Complete
13	557.60.24.345/48	-	RIB 12, AILERON, LH/RH	Complete
14	557.60.24.349/50	-	OUTBD CLOSEOUT RIB, AILERON, LH/RH	Complete
15	557.60.24.363/64	-	NOSE RIB 3, AILERON, LH/RH	Complete
16	557.60.24.365/66	-	NOSE RIB 4, AILERON, LH/RH	Complete
17	557.60.24.367/68	-	NOSE RIB 5, AILERON, LH/RH	Complete
18	557.60.24.369/70	-	NOSE RIB 6, AILERON, LH/RH	Complete
19	557.60.24.373/74	-	NOSE RIB 8, AILERON, LH/RH	Complete
20	557.60.24.375/76	-	NOSE RIB 9, AILERON, LH/RH	Complete
21	557.60.24.377/78	-	NOSE RIB 10, AILERON, LH/RH	Complete
22	557.60.24.379/80	-	NOSE RIB 11, AILERON, LH/RH	Complete

Table 1-6 Ribs Analysed in this Report

1.6 Parts and Assemblies Covered, Trailing Edge

The aileron trailing edge C-Channels are shown in the following figure. Each part is labelled as an item 1 – 5.

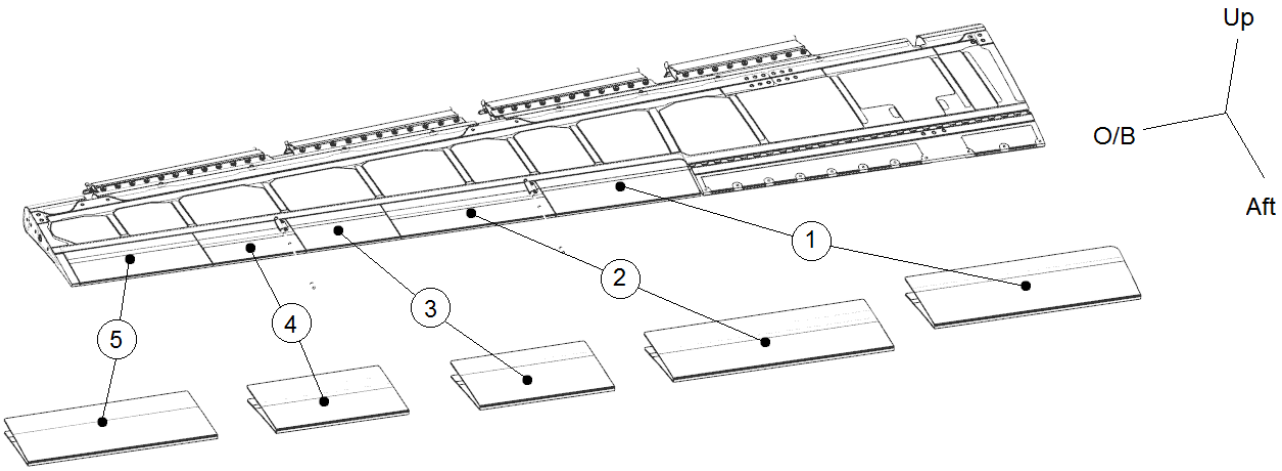

Figure 1-8 Trailing Edge in Context of Aileron

Item	Part Number	Rev	Title	Scope of Analysis
1	557.60.24.403/04	C	TE, AILERON, LH/RH	Complete
2	557.60.24.405/06	C	TE, AILERON, LH/RH	Complete
3	557.60.24.407/08	C	TE, AILERON, LH/RH	Complete
4	557.60.24.415/16	C	TE, AILERON, LH/RH	Complete
5	557.60.24.417/18	D	TE, AILERON, LH/RH	Complete

Table 1-7 Trailing Edge C-Channels Analysed in this Report

1.7 Parts and Assemblies Covered, Aileron Hinges: Aileron-Mounted Brackets

The aileron-side hinges are shown in the following figure. Each part is labelled as an item 1 – 3. Note that the inboard hinge and the actuator lug are integrated in the Inbd, Fwd Spar, which has already been shown in section 1.3. Hardware is not shown in the figure, but is shown in the detailed analysis of the hinges.

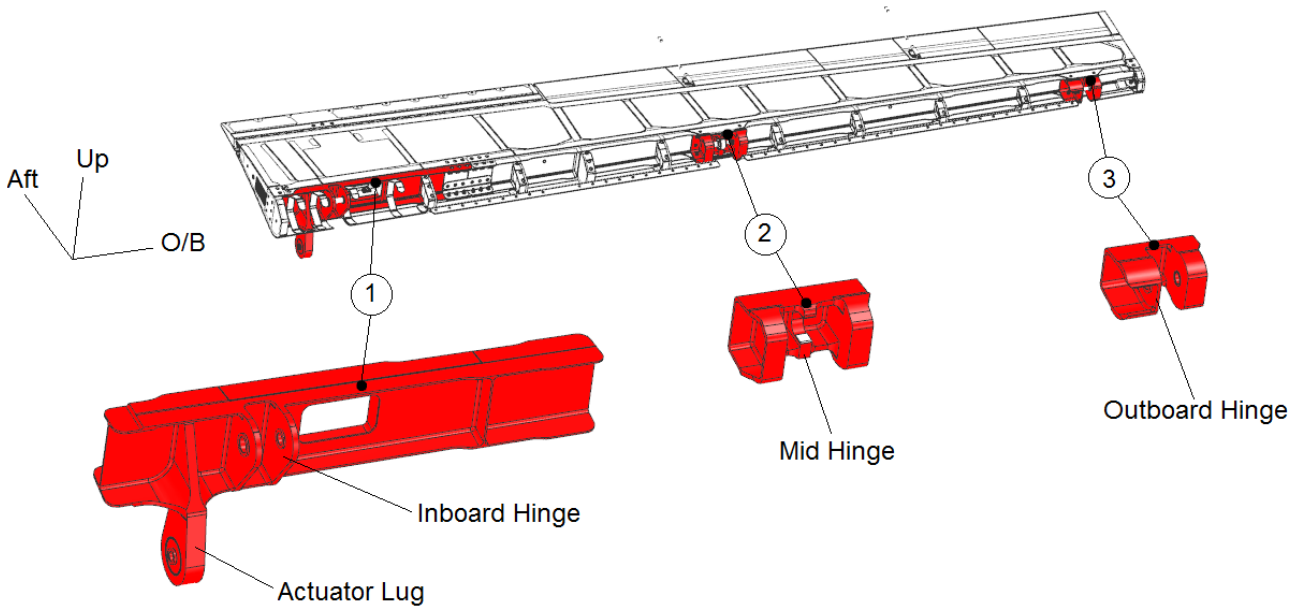

Figure 1-9 Aileron-Side Hinges in Context of Aileron

Item	Part Number	Rev	Title	Scope of Analysis
1	557.60.24.397/98	-	SPAR, INBD, FWD, AILERON, LH/RH	Complete
2	557.60.24.371/72	-	MID HINGE ASSY, AILERON, LH/RH	Complete
3	557.60.24.381/82	-	HINGE, OUTBD, AILERON, LH/RH	Complete

Table 1-8 Aileron-Side Hinges Analysed in this Report

1.8 Parts and Assemblies Covered, Aileron Hinges: Wing-Mounted Brackets

The wing-side hinges are shown in the following figures. Each part is labelled as an item 1 – 8. Hardware is not shown in the figure, but is shown in the detailed analysis of the hinges.

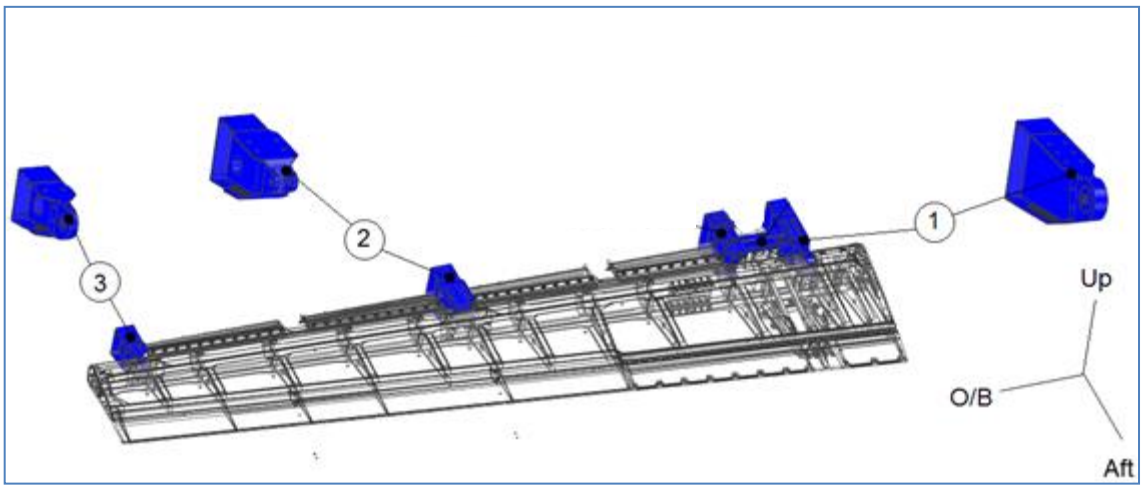

Figure 1-10 Wing-Side Hinges in Context of LH Aileron

Item	Part Number	Rev	Title	Scope of Analysis
1	5572124369/70	A	HINGE, AILERON, INBOARD, LH/RH	Complete
2	5572124371/72	-	HINGE, AILERON, MIDDLE, LH/RH	Complete
3	5572124373/74	A	HINGE, AILERON, OUTBOARD, LH/RH	Complete

Table 1-9 Wing-Side Hinges Analysed in this Report

1.9 Parts and Assemblies Covered, Flettner Tab Installation

The aileron flettner tab installation is shown in the following figure. Each part is labelled as an item 1 – 8. Hardware is not shown in the figure, but is shown in the detailed analysis of the hinges.

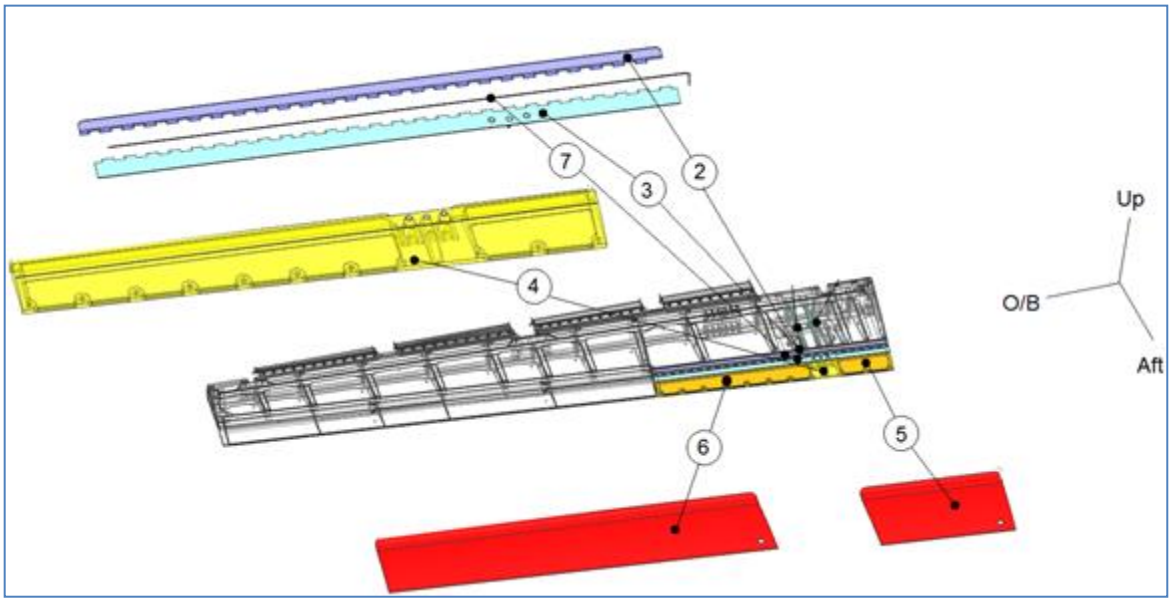

Figure 1-11 Flettner Tab Installation in Context of LH Aileron

Item	Part Number	Rev	Title	Scope of Analysis
1	Intentionally blank			
2	557.60.24.419/20	A	HINGE HALF, FWD, LH/RH	Complete
3	557.60.24.421/22	-	HINGE HALF, AFT, LH/RH	Complete
4	557.60.24.309/10	-	FLETTNER TAB, UPR, LH/RH	Complete
5	557.60.24.311/12	-	SKIN, FLETTNER, INBD, LH/RH	Complete
6	557.60.24.319/20	-	SKIN, FLETTNER, OUTBD, LH/RH	Complete
7	557.60.24.099	D	PIN, HINGE, AILERON	Complete

Table 1-10 Flettner Tab Parts Analysed in this Report

1.10 Parts and Assemblies Covered, LE Balance Mass Assy

The aileron counterbalance weights are shown in the following figure. Counterbalance weights provide inertial load input to the aileron structure.

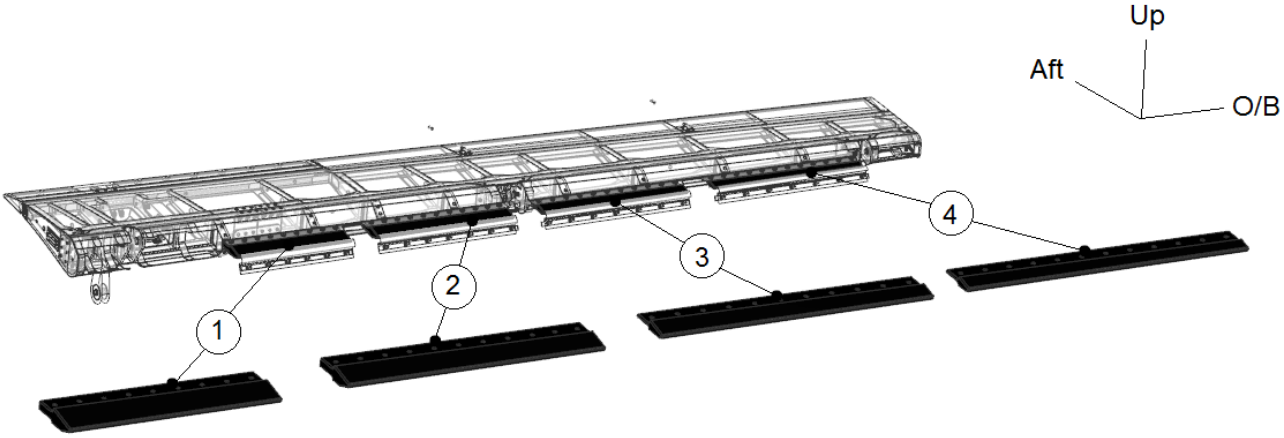

Figure 1-12 Counterbalance Weights in Context of LH Aileron

Item	Part Number	Rev	Title	Scope of Analysis
1	557.60.24.197/98 557.60.24.210	A A	WEIGHT, AILERON BALANCE 1, LH/RH WEIGHT, AILERON BALANCE, AUX	Complete
2	557.60.24.201/02 557.60.24.210 557.60.24.213	A A -	WEIGHT, AILERON BALANCE 2, LH/RH WEIGHT, AILERON BALANCE, AUX WEIGHT, AILERON BAL., AUX, SMALL	Complete
3	557.60.24.199/200	A	WEIGHT, AILERON BALANCE 3, LH/RH	Complete
4	557.60.24.203/04	A	WEIGHT, AILERON BALANCE 4, LH/RH	Complete

Table 1-11 Counterbalance Weights covered in this Report

2 MAIN BODY

2.1 Aileron Control System

During operation of the aileron and trim tab they are free to move through angular positions as shown in Figure 2-1.

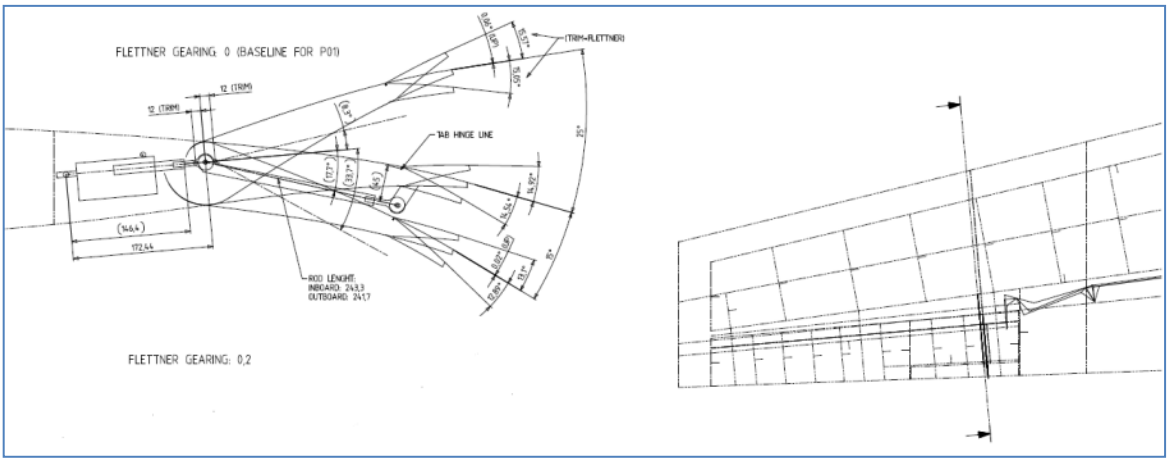

Figure 2-1 Aileron angular movement range.

2.2 Material Data

2.2.1.1 Metallic Materials

Material data allowables used in this report has been extracted from ref. [3]. All calculation files have a single worksheet *"Allowables"*; all other worksheets use material values linked to this sheet. Metallic material properties are evaluated at 20°C. All aileron parts under load are assumed to be subject to the standard temperature operation range (-65°C to +50°C); Ref. [1] section 5.4 states that no additional knock down factors are required.
Selection of material allowable statistical tolerance follows that given in ref. [1] Table 5.1 and may be summarized as:

Class 2 part[4]	Multiple load paths	B basis
Class 2 part	Single load path	A basis
Class 2 part	Single load path after failure	A basis

Unless explicitly stated, properties used by the analysis are the minimum of L and LT directions. Exceptions may occur where fittings have significant loading in the ST direction. For these parts the use of ST properties is described in the relevant analysis section.
Billet sizes have been taken form the part BOM and follows the requirements from ref. [6]. This requirement is applicable to plate alloy 2124-T851, 7050-T7451 and 7475.T7351
i.e. next size up should be used for allowables. All calculation files have a sheet *"Geometry"*; listed on this sheet is the BOM billet size and that use by the analysis.
Material allowables used in compiling this report are listed in Appendix A.

2.2.2 Composite Materials

The laminate used for the composite components of the Trailing Edge is 8552/AS4 AGP280. Material properties (stiffness and strength) are taken from Ref.[19]. They are dependent on the ply orientation of the composite material and will be presented in this chapter.

The trailing edge of the aileron contains two different main layups:
- 6 ply layup : -45/0/45/45/0/-45
- 4 ply layup : -45/0/0/-45

2.2.2.1 Basic ply properties

Thickness per ply: 0.27 mm
Stiffness per ply is provided below:

$$E_{11} = E_{22} = 64.45\text{GPa}$$

$$G_{12} = 4.79\text{GPa}$$

$$\nu_{12} = \nu_{21} = 0.05$$

2.2.2.2 Equivalent lamina properties

Equivalent stiffness of the composite material and equivalent thermal properties are independent on the environmental conditions and are given below:

[4] No class 1 parts are used in the aileron and support structure

Laminate engineering constants and expansion coefficients

Laminate : 6plies_BVID_DRY_M55
Modified : Mon Nov 28 09:30:56 2016

Lay-up : (-45a/0a/+45a/+45a/0a/-45a) h = 1.62 mm

Ply
a 8552/AS4 AGP280_6ply_allow_BVID_DRY_M55

Moduli (GPa)

In-plane			Flexural		
E_x	=	38.47	E^f_x	=	34.36
E_y	=	38.47	E^f_y	=	34.36
G_xy	=	22.06	G^f_xy	=	23.98

Poisson's ratios

nu_xy	=	0.433	nu_yx	=	0.433

Thermal expansion coefficients

In-plane			Curvat.		
		e-6/°C			(1/m)/°C
alpha_x	=	2.88	delta_x	=	0
alpha_y	=	2.88	delta_y	=	0
alpha_xy	=	0	delta_xy	=	0

Laminate engineering constants and expansion coefficients

Laminate : 4plies_BVID_DRY_M55
Modified : Mon Nov 28 09:28:57 2016

Lay-up : (-45a/0a/0a/-45a) h = 1.08 mm

Ply
a 8552/AS4 AGP280_4ply_allow_BVID_DRY_M55

Moduli (GPa)

In-plane			Flexural		
E_x	=	46.59	E^f_x	=	25.97
E_y	=	46.59	E^f_y	=	25.97
G_xy	=	17.74	G^f_xy	=	27.45

Poisson's ratios

nu_xy	=	0.313	nu_yx	=	0.313

Thermal expansion coefficients

In-plane			Curvat.		
		e-6/°C			(1/m)/°C
alpha_x	=	2.88	delta_x	=	0
alpha_y	=	2.88	delta_y	=	0
alpha_xy	=	0	delta_xy	=	0

2.2.2.3 Strength allowables

Strength allowables per ply to be used with the Tsai-Wu criteria are provided below for the two main layups.
Values for the 6 ply layup (66% of 45 deg plies) are found by interpolation between the 60% and 70% configurations. Ref. [19] is used for defining the interpolation function.

6 ply layup (-45/0/45/45/0/-45)

		BVID allowables		OHC allowables	
% of 45deg plies	Allowable [Mpa]	DRY/-55°	WET/90°	DRY/-55°	WET/90°
60	Xt	410	550	410	550
	Xc	306	251	482	302
	S	94	44	94	44
70	Xt	470	544	470	544
	Xc	316	278	537	336
	S	94	44	94	44
66.6	Xt	447.73	546.96	447.73	546.96
	Xc	313.58	268.84	517.18	323.75
	S	94.44	43.78	94.44	43.78

Table 2-1: 6 ply layup Tsai-Wu stress allowables

4 ply layup (-45/0/0/-45)

		BVID allowables		OHC allowables	
% of 45deg plies	Allowable [Mpa]	DRY/-55°	WET/90°	DRY/-55°	WET/90°
50	Xt=Yt	367.27	547.62	367.27	547.62
	Xc=Yc	286.57	225.16	436.4	275.8
	S	94.44	43.78	94.44	43.78

Table 2-2: 4 ply layup Tsai-Wu stress allowables

2.2.2.4 Bearing allowables

Ultimate composite bearing stress B-basis allowables for type NAS1921 blind rivets is obtained from Ref.[20]

ENV.	Bearing Allowable [MPa]
RTD	382
90/Wet	351

Table 2-3: TE composite material bearing allowable

2.2.2.5 Fastener Allowables NAS1921

Fasteners shear strength data has been taken from ref. [4]. No bearing strength in aluminium sheet is presented.
Derivation of estimated bearing data in 2000 series aluminium is presented in Appendix O.
For CFRP/aluminium joints, the fastener tail is always in the aluminium sheet part of the joint.
Thus the equivalent (NAS1919) protruding head fastener allowables can be utilised.
The fastener bearing allowable in the CFRP side of the joint is given below.

2.2.2.6 Bearing bypass

Bearing-bypass curves for type NAS1921 blind rivets originate from Ref.[20]:

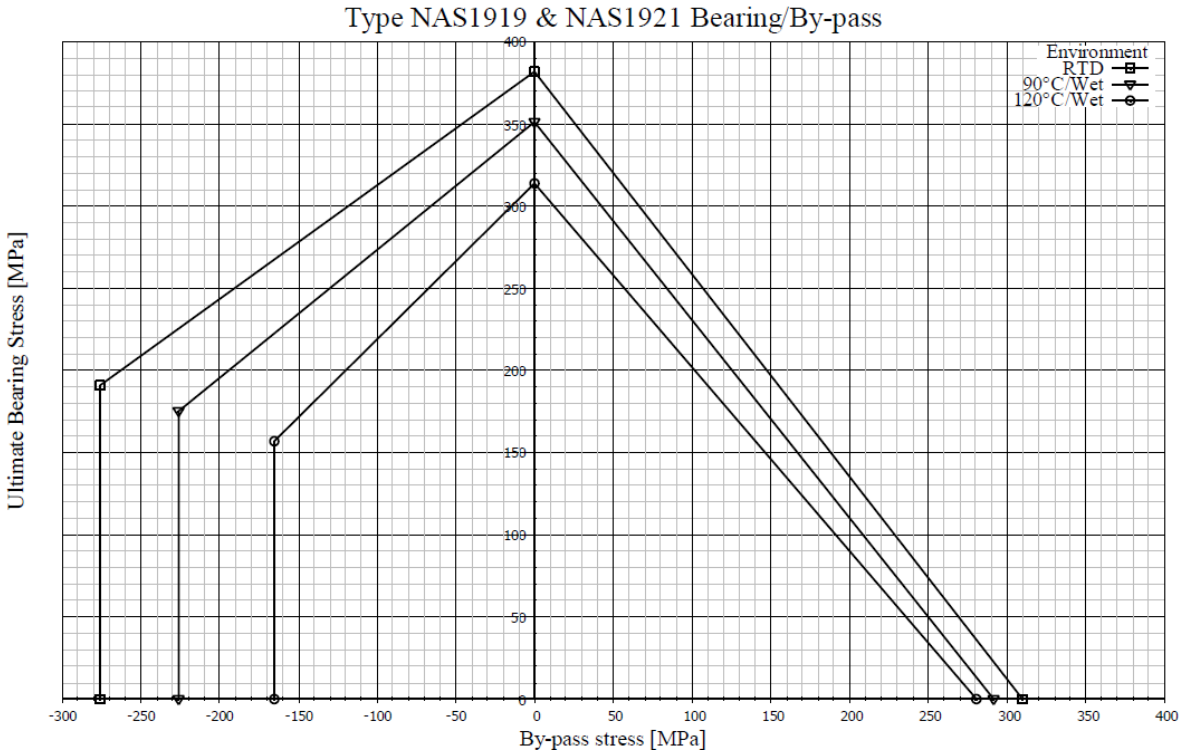

Figure 2-2: Bearing-bypass curves for Aileron TE NAS 1921 blind rivets

2.3 Load Case Selection

The aileron installation is subject to the following types of loading.

Aerodynamic forces applied to the aileron control surfaces.
Loading induced by conforming to wing bending deformations.
Forces from the Flight control system (FCS).

2.3.1 Aerodynamic Loading

Five critical aerodynamic pressure cases are defined in ref. [11], at four aileron angular displacement. Pressures loading for these critical flight conditions have been derived using a CFD approach. Contour plots of pressure distributions are shown in Appendix C Figure 6-1 to Figure 6-5 Interface report ref. [13] defines GFEM wing bending enforce displacements (ED) which must be combined with aerodynamic cases.
Combined details are summarized in Table 2-4.

Aileron/Tab Configuration	Load Case Id.			Description
	Report ref. [11]	This report	GFEM Id	
-22° aileron (up), 0° tab	1	2001	1002811	MT12-502-AN225
0° aileron, 0° tab	2	3002	1000002	VG-MF-003_A5
0° aileron, 0° tab	3	3003	1000030	VG-MF-402_AN6
-22° aileron (down), 0° tab	4	4004	1003102	MT51-003-A066
-22° aileron (down), 0° tab	5	5005	1002776	MT12-202-A171

Table 2-4 Summary of aileron aerodynamic load case.

Throughout this report when results are quoted for aerodynamic cases they include the effects of wing enforced displacements (ED).
The sign convention for aileron/trim tab angles and the angles they operate over are shown in Figure 2-1.

.

2.3.2 Aileron Hinge Moment Correction

It has been identified by the loading group that the hinge moment resulting from CFD derived pressure distributions is at variance with that found from wind tunnel derived data.
Neither method provides a complete account of aileron loading; the two aerodynamic methods will unified as follows:

> CFD data ref [11] will be used for FEM element pressure loading.
> Wind tunnel data ref. [12] hinge moments will be matched by applying a correction moment.

The hinge moment (My) from wind tunnel data is derived from ref. ([15] equation 89), shown below:

$$\begin{cases} C_{h,a,R} = C_{h0,a} + C_{h\alpha}\alpha + C_{h\delta_a}\delta_a + C_{h\delta_{a,tab}}k_{\delta_{a,tab}}\delta_a, & \text{for } \delta_a = \delta_{a,R} \\ C_{h,a,L} = -\left[C_{h0,a} + C_{h\alpha}\alpha + C_{h\delta_a}\delta_a + C_{h\delta_{a,tab}}k_{\delta_{a,tab}}\delta_a\right], & \text{for } \delta_a = -\delta_{a,L} \end{cases}$$

Further details are given in Appendix D.

A comparison of hinge line loading for the uncorrected [rev01] corrected [rev02] CFD loading is given in Table 2-5.
The correction moment is distributed into the aileron box via the GFEM 5.0.0 aileron loading RBE3 [G11501, E2799991]. The moment given in the right most column of Table 2-5 is the value applied to the RBE3.

		Load Summation Hinge Line (C2710001, [0,0,0])						ER-24-000184	Correction
Load Case (Limit)	Angles	Fx	Fy	Fz	Mx	My	Mz	My	
	deg		N.			N. mm		N. mm	
VG-MF-003_A5-rev01	0ail / 0 tab	407	114	6911	5074957	750230	-221251	426568	
VG-MF-003_A5-rev02		407	114	6911	5074957	426568	-221251		-323662
VG-MF-402_AN6-rev01	0ail / 0 tab	-662	-195	-2114	-1341283	-314410	571549	197486	
VG-MF-402_AN6-rev02									Difference in My sign, no correction used.
RP-MT51-003-A066-rev01	3ail / 0tab	348	66	5792	4368004	585796	-261704	434568	
RP-MT51-003-A066-rev02		348	66	5792	4368004	434568	-261704		-151228
RP-MT12-202-A171-rev01	10ail / 0tab	35	107	5883	4739226	625837	-100211	387861	
RP-MT12-202-A171-rev02		35	107	5883	4739226	387861	-100211		-237976
RP-MT12-502-AN225-rev01	-22 ail / 0tab	-73	56	-1012	-913280	-73448	51153	-196527	
RP-MT12-502-AN225-rev02		-73	56	-1012	-913280	-196527	51153		-123079

Table 2-5 Summary of aero loading about the hinge line with corrected My.

Throughout this report references to aero loads are for the corrected (rev02) values.

2.3.3 Inertia Loads

2.3.3.1 Aileron Mass

The mass and CG of the aileron body and trim tab has taken from ref. [13], appendix 5.1 & ref. [23]. Both the LHS and RHS have identical mass. The mass is for the movable surface, it excludes the support structure and control rods.

CG positions in the A/C coordinate system with the aileron/trim tab at 0 deg

	Mass (kg)	Xcg (mm)	Ycg (mm)	Zcg (mm)
LHS	18.539	9523	-7080	2091
RHS	18.539	9523	-7080	2091
FEM [1]	18.533kg	9523	-7083	2089

CG position in the hinge coordinate system (C2710001) with the aileron/trim tab at 0 deg

	Mass (kg)	Xcg (mm)	Ycg (mm)	Zcg (mm)
FEM [1]	18.533kg	1.05	695.1	-8.30

+ve X = forward of the hinge line.

2.3.3.2 Inertia Load Cases

The inertia cases can be split in to two sets:

Inertia (body acceleration) associated with aerodynamic cases.
Standalone inertia cases required by CS23

The use of the aileron is associated with A/C roll. Inertia from roll acceleration acts in the opposite sense to aerodynamic forces and is conservative to ignore. No inertia data is given in the ref. [11]. Hence aerodynamic loading has not combined with inertia loading.

The standalone inertia cases can be further divided in to two subsets:

CS 23.393	Applicable to the entire aileron, trim tab and support structure.	
	12g (limit) parallel to the hinge line	(C2710001 Y axis)
	Accelerations act at the CG of the aileron/trim tab assembly[5].	
CS 23.659	Applicable to the leading edge mass balance assembly.	
	24g (limit) normal to the plane the control surface	(C2710001 Z axis)
	12g (limit) fore and aft	(C2710001 X axis)
	12g (limit) parallel to the hinge line	(C2710001 Y axis)
	Accelerations act at the CG of the mass balance assembly.	

For the mass balance assembly inertia cases, the full complement of balance masses has been used.

[5] The inertia loading acts through the aileron CG; which is located slightly forward (0 to 5mm) of the hinge line. Hence interface loads effectively do not vary with aileron angle. A single aileron angle of 0° has been investigated for this load case.

For substantiating the integrity of the mass balance assembly a specific FEM has been constructed (FEM 10), see section 2.4.2.

2.3.4 Wing Enforced Displacements

All aerodynamic loading used in this report is supplemented with the effects of wing bending.

Interface loads/displacements are taken from interface document ref. [13].
A limit to ultimate (intact) safety factor of 1.5 has been applied.

The majority of internal loading used in this report is extracted from FEM's [3] to [7][6], the mesh for this set of models is identical to GFEM 5.0 ref. [16]. Wing bending is applied as enforced displacements at the support bracket at the wing box interfaces. The interface grids are shown diagrammatically in Figure 2-3 and listed in Table 2-3.

Wing Bending Load Interface Grids
Flight Control rod 9
Grid Id's: 8041180
Aileron Inboard Support Bracket
Grid Id's: 211144, 211308, 2038084, 2038085, 2038112, 2038132, 2038134, 2038152, 2057284, 2057285, 2057286
Trim Tab Actuator
Grid Id's: 2057455, 2057477
Trim Actuator Support Bracket
Grid Id's: 211145, 211310, 2038135, 2038136, 2057449, 2057450, 2057451
Aileron Mid Support Bracket
Grid Id's: 211159, 211323, 2038223, 2038224, 2057749, 2057750, 2057751
Aileron Outboard Support Bracket
Grid Id's: 211176, 211337, 2038281, 2038282, 2038296, 2057908, 2057909, 2057910

Table 2-6: Wing bending load interface grids.

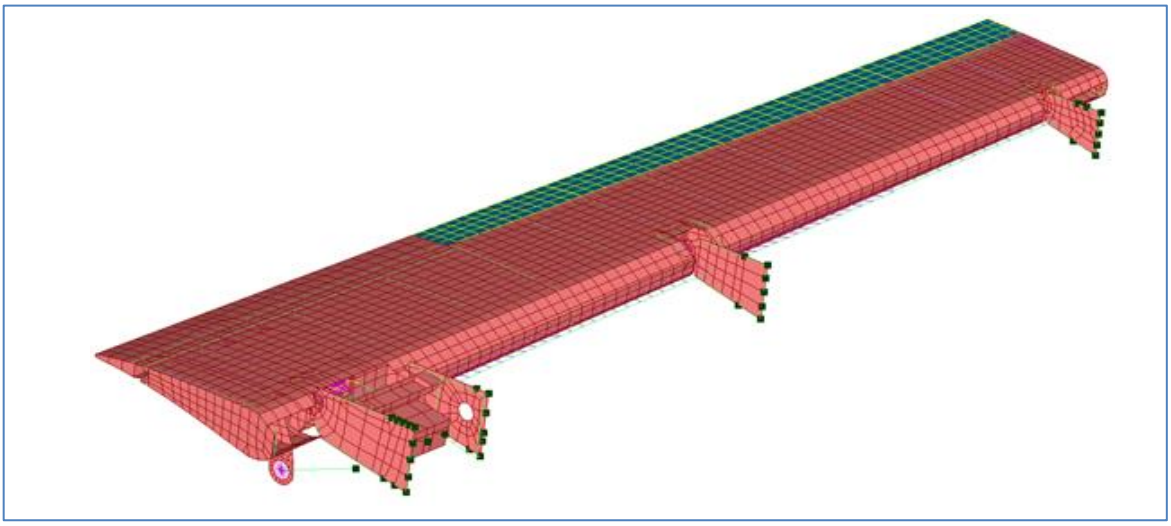

Figure 2-3: Location of wing bending enforced displacement interfaces

[6] FEM's [2 to 7] have an identical mesh rotated to the appropriate aileron angle. Each aileron angle model has a separate FEM Id.

2.3.5 Trailing Edge Panel Loads

In addition to interface loading from aileron and wing bending, the three support structure brackets are subject an additional aero loading from the wing trailing edge panels.
The locations of the TE panels in relation to aileron are shown in Figure 2-4.

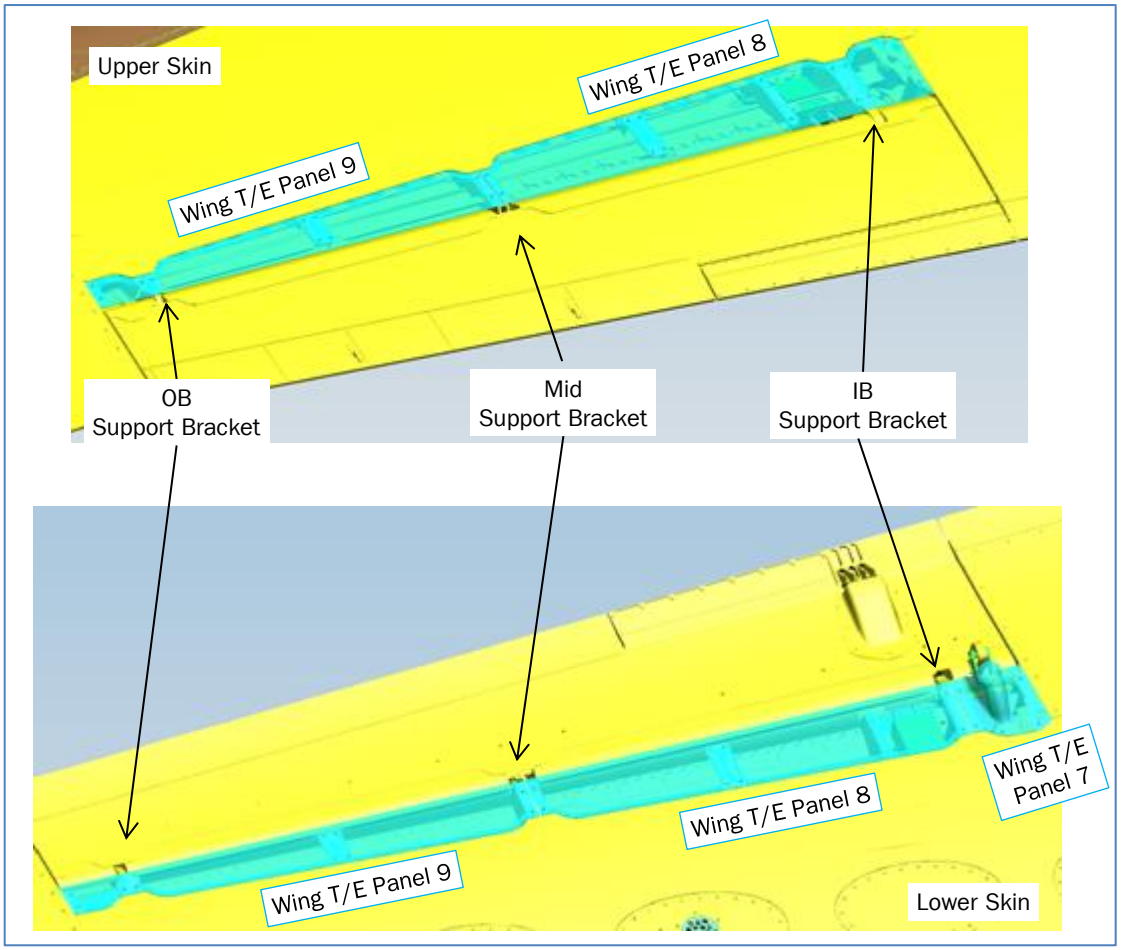

Figure 2-4: Trailing edge (TE) panel loading.

The following loading for the TE has been taken from ref. [22].
The loading from the wing trailing edge panels is applied to the aileron (hinge) support brackets in a simplified manner as follows.

Fastener critical axial loads are enveloped with critical shear loads.

TE load summation at fastener positions are presented in Table 2-7 to Table 2-11

Wing Box Lower Trailing Edge Panel 7								
Hinge	Bolt	Criteria	Fx	Fy	Fres[x,y]	Fz	LC Id.	Description
			N.					
IB	Bolt 1	max axial				27.5	16_RHS	LC16_RHS_MTOW_20418ft_a0.44_b1.55_m0.81
IB	Bolt 1	min axial				-1.5	1	LC01_MTOW_20000ft_a9.58_m0.513
IB	Bolt 1	max shear	7.1	-4.0	8.2		16_RHS	LC16_RHS_MTOW_20418ft_a0.44_b1.55_m0.81
IB	Bolt 2	max axial				4.0	1	LC01_MTOW_20000ft_a9.58_m0.513
IB	Bolt 2	min axial				-9.5	11	LC11_MFW_20000ft_a-4.34_m0.647
IB	Bolt 2	max shear	-0.3	4.3	4.3		16_RHS	LC16_RHS_MTOW_20418ft_a0.44_b1.55_m0.81

Table 2-7 Critical wing box trailing edge lower panel 7 fastener loads

Wing Box Lower Trailing Edge Panel 8								
Hinge	Bolt	Criteria	Fx	Fy	Fres[x,y]	Fz	LC Id.	Description
			N.					
IB	Bolt 9	max axial				13.1	11	LC11_MFW_20000ft_a-4.34_m0.647
IB	Bolt 9	min axial				-5.3	2	LC02_MTOW_20000ft_a5.45_m0.647
IB	Bolt 9	max shear	-0.2	0.0	0.2		11	LC11_MFW_20000ft_a-4.34_m0.647
IB	Bolt 10	max axial				1.5	1	LC01_MTOW_20000ft_a9.58_m0.513
IB	Bolt 10	min axial				-27.4	16_RHS	LC16_RHS_MTOW_20418ft_a0.44_b1.55_m0.81
IB	Bolt 10	max shear	-0.4	0.0	0.4		16_RHS	LC16_RHS_MTOW_20418ft_a0.44_b1.55_m0.81
Mid	Bolt 1	max axial				7.6	1	LC01_MTOW_20000ft_a9.58_m0.513
Mid	Bolt 1	min axial				-30.3	8	LC08_MTOW_20000ft_a-4_m0.647
Mid	Bolt 1	max shear	1.1	16.1	16.1		16_RHS	LC16_RHS_MTOW_20418ft_a0.44_b1.55_m0.81
Mid	Bolt 2	max axial				-0.2	13_LHS	LC13_LHS_MTOW_45000ft_a7.47_b-27.76_m0.503
Mid	Bolt 2	min axial				-20.6	16_RHS	LC16_RHS_MTOW_20418ft_a0.44_b1.55_m0.81
Mid	Bolt 2	max shear	-0.2	-16.1	16.1		16_RHS	LC16_RHS_MTOW_20418ft_a0.44_b1.55_m0.81

Table 2-8 Critical wing box trailing edge lower panel 8 fastener loads

Wing Box Lower Trailing Edge Panel 9								
Hinge	Bolt	Criteria	Fx	Fy	Fres[x,y]	Fz	LC Id.	Description
			N.					
Mid	Bolt 9	max axial				31.9	11	LC11_MFW_20000ft_a-4.34_m0.647
Mid	Bolt 9	min axial				-8.0	1	LC01_MTOW_20000ft_a9.58_m0.513
Mid	Bolt 9	max shear	-0.8	0.0	0.8		11	LC11_MFW_20000ft_a-4.34_m0.647
Mid	Bolt 10	max axial				16.6	16_RHS	LC16_RHS_MTOW_20418ft_a0.44_b1.55_m0.81
Mid	Bolt 10	min axial				0.3	13_LHS	LC13_LHS_MTOW_45000ft_a7.47_b-27.76_m0.503
Mid	Bolt 10	max shear	-0.4	0.0	0.4		16_RHS	LC16_RHS_MTOW_20418ft_a0.44_b1.55_m0.81
OB	Bolt 3	max axial				1.0	1	LC01_MTOW_20000ft_a9.58_m0.513
OB	Bolt 3	min axial				-4.1	11	LC11_MFW_20000ft_a-4.34_m0.647
OB	Bolt 3	max shear	0.1	0.0	0.1		11	LC11_MFW_20000ft_a-4.34_m0.647
OB	Bolt 4	max axial				19.7	11	LC11_MFW_20000ft_a-4.34_m0.647
OB	Bolt 4	min axial				-7.0	1	LC01_MTOW_20000ft_a9.58_m0.513
OB	Bolt 4	max shear	-0.5	0.0	0.5		11	LC11_MFW_20000ft_a-4.34_m0.647

Table 2-9 Critical wing box trailing edge lower panel 9 fastener loads

Wing Box Upper Trailing Edge Panel 8								
Hinge	Bolt	Criteria	Fx	Fy	Fres[x,y]	Fz	LC Id.	Description
			N.					
IB	Bolt 9	Max axial				114.2	23	LC23_MTOW_20418ft_a0.44_m0.81
IB	Bolt 9	Min axial				4.8	13_LHS	LC13_LHS_MTOW_45000ft_a7.47_b-27.76_m0.503
IB	Bolt 9	Fres	8.7	9.0	12.5		23	LC23_MTOW_20418ft_a0.44_m0.81
IB	Bolt 10	Max axial				116.2	16_RHS	LC16_RHS_MTOW_20418ft_a0.44_b1.55_m0.81
IB	Bolt 10	Min axial				5.3	13_LHS	LC13_LHS_MTOW_45000ft_a7.47_b-27.76_m0.503
IB	Bolt 10	Fres	8.8	9.2	12.7		16_RHS	LC16_RHS_MTOW_20418ft_a0.44_b1.55_m0.81
IB	Bolt 11	Max axial				70.2	6	LC06_MFW_20000ft_a1.85_m0.803
IB	Bolt 11	Min axial				2.8	13_LHS	LC13_LHS_MTOW_45000ft_a7.47_b-27.76_m0.503
IB	Bolt 11	Fres	5.3	5.5	7.7		6	LC06_MFW_20000ft_a1.85_m0.803
IB	Bolt 12	Max axial				79.3	16_RHS	LC16_RHS_MTOW_20418ft_a0.44_b1.55_m0.81
IB	Bolt 12	Min axial				3.5	13_LHS	LC13_LHS_MTOW_45000ft_a7.47_b-27.76_m0.503
IB	Bolt 12	Fres	6.0	6.3	8.7		16_RHS	LC16_RHS_MTOW_20418ft_a0.44_b1.55_m0.81
Mid	Bolt 1	Max axial				161.2	16_RHS	LC16_RHS_MTOW_20418ft_a0.44_b1.55_m0.81
Mid	Bolt 1	Min axial				8.3	13_LHS	LC13_LHS_MTOW_45000ft_a7.47_b-27.76_m0.503
Mid	Bolt 1	Fres	15.4	-76.6	78.1		6	LC06_MFW_20000ft_a1.85_m0.803
Mid	Bolt 2	Max axial				328.7	16_RHS	LC16_RHS_MTOW_20418ft_a0.44_b1.55_m0.81
Mid	Bolt 2	Min axial				23.5	13_LHS	LC13_LHS_MTOW_45000ft_a7.47_b-27.76_m0.503
Mid	Bolt 2	Fres	7.8	105.8	106.1		6	LC06_MFW_20000ft_a1.85_m0.803

Table 2-10 Critical wing box trailing edge upper panel 8 fastener loads

Wing Box Upper Trailing Edge Panel 9								
Hinge	Bolt	Criteria	Fx	Fy	Fres[x,y]	Fz	LC Id.	Description
			N.					
Mid	Bolt 9	Max axial				100.6	16_RHS	LC16_RHS_MTOW_20418ft_a0.44_b1.55_m0.81
Mid	Bolt 9	Min axial				6.6	13_LHS	LC13_LHS_MTOW_45000ft_a7.47_b-27.76_m0.503
Mid	Bolt 9	Fres	1.6	-0.1	1.6		16_RHS	LC16_RHS_MTOW_20418ft_a0.44_b1.55_m0.81
Mid	Bolt 10	Max axial				274.1	3	LC03_MTOW_20000ft_a2.27_m0.803
Mid	Bolt 10	Min axial				6.6	13_LHS	LC13_LHS_MTOW_45000ft_a7.47_b-27.76_m0.503
Mid	Bolt 10	Fres	4.5	-0.3	4.5		3	LC03_MTOW_20000ft_a2.27_m0.803
OB	Bolt 3	Max axial				-1.1	13_RHS	LC13_RHS_MTOW_45000ft_a7.47_b-27.76_m0.503
OB	Bolt 3	Min axial				-14.3	12	LC12_MFW_20000ft_a-1.65_m0.803
OB	Bolt 3	Fres	-0.2	0.0	0.2		12	LC12_MFW_20000ft_a-1.65_m0.803
OB	Bolt 4	Max axial				152.2	16_RHS	LC16_RHS_MTOW_20418ft_a0.44_b1.55_m0.81
OB	Bolt 4	Min axial				13.7	13_LHS	LC13_LHS_MTOW_45000ft_a7.47_b-27.76_m0.503
OB	Bolt 4	Fres	2.5	-0.2	2.5		16_RHS	LC16_RHS_MTOW_20418ft_a0.44_b1.55_m0.81

Table 2-11 Critical wing box trailing edge upper panel 9 fastener loads

Lower Panels

Inspection of Table 2-7 to Table 2-9, shows envelope loading is low:

All brackets/fasteners, limit: Max $Axial_{abs}$ = 31.9 N, Max shear = 0.8 N.

Loading is considered negligible and has been ignored.

Upper Panels

Inspection of Table 2-10 to Table 2-11, shows envelope loads are:

All brackets/fasteners, limit: Max Axial = 328.7 N
All brackets/fasteners, limit: Min Axial = -14.3 N

Minimum (–ve) axial loading is considered negligible and has been ignored.

Maximum (+ve) axial panel loads have been combined with hinge loads as follows:

Panel and hinge loads ARE combined when both fastener axial and hinge vertical loads have the same load direction
When panel loads oppose hinge loads, hinge loads alone are applied.

2.3.6 Temperature Effects on Loading and Allowables

The aileron is subject to the general temperature environment envelope given in ref. [21]. The temperature envelope may be summarized as:

Minimum operating temperature	= -55°C
Maximum operating temperature	= 70°C
Maximum ground soak temperature	= 85°C

This report implements the following temperature related effects:

- Temperature induced loading is only considered at the trailing edge/rear spar interface see Figure 2-5
- Temperature effects on metallic allowables are not required. From ref. [1], para 5.4.1, no temperature knock down factors are required.
- Temperature effects on composite allowables follows that mandated in ref. [19]

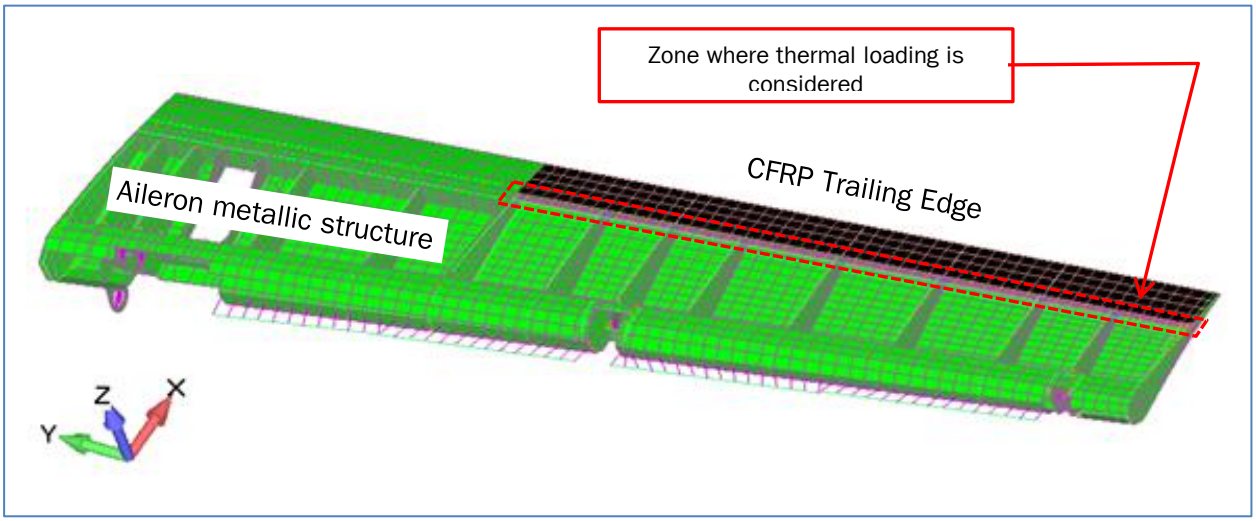

Figure 2-5: Location where temperature induced loading is considered.

2.3.7 Flight Control System (FCS)

Flight control system loads can be divided in to two categories:

Control forces to operate the aileron body.
Control forces to operate the trim tab.

The interfaces where these two sets are applied are shown in Figure 2-6.

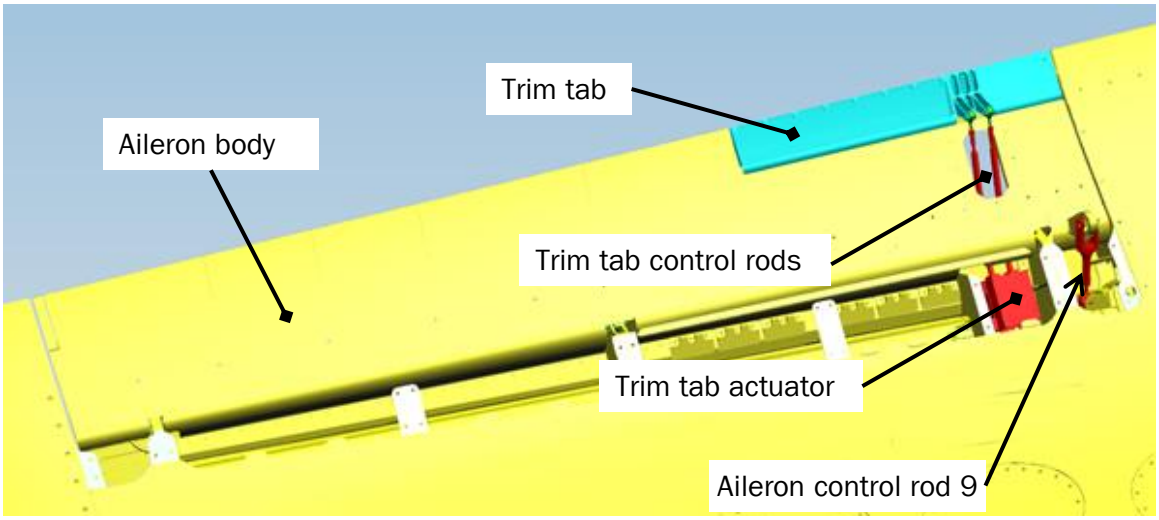

Figure 2-6 Location of FCS load introduction interfaces

Both categories of loading are define in interface report ref. [14] and summarized below.

Critical aileron control rod 9 loads

Aileron at extreme up position (-25°)	Rod 9 = -3913.1 N. (limit)	Dual Pilot Forces
Aileron at neutral position (0°)	Rod 9 = -5738.2 N. (limit)	Dual Pilot Forces
Aileron at extreme down position (15°)	Rod 9 = -9477.2 N. (limit)	Dual Pilot Forces

-ve sign indicates the control rod is in compression.

Analysis is limited to the control arm integral with the front spar forward M/C as shown in Figure 2-7

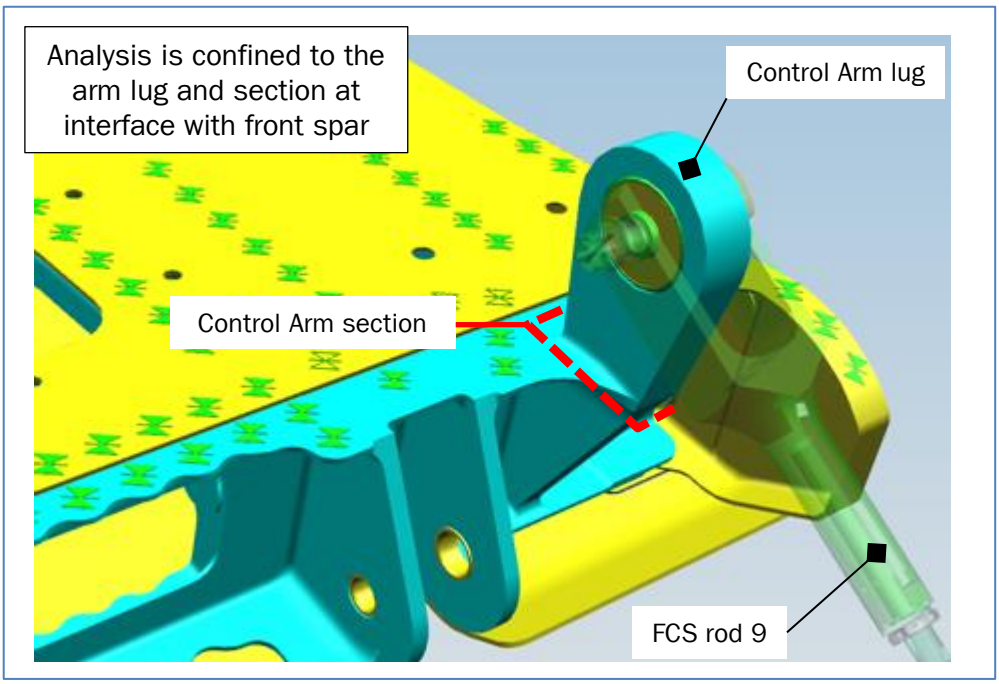

Figure 2-7 Aileron zone where FCS loading is applicable.

Critical trim tab actuator loads

Actuator static load	P = ± 4200. N. Limit[7]	ref.[15]
Actuator normal operation	P = ± 600. N. Limit	ref.[15]

The flight control system (FCS) is capable of introducing loading which exceeds that which can be reacted by aileron aerodynamic loads. The critical FCS loadings are treated as a special case for the aileron body analysis. Their application is limited to specific parts as follows

Analysis is limited to the control arms (4 off) and arm root sections as shown in Figure 2-8.

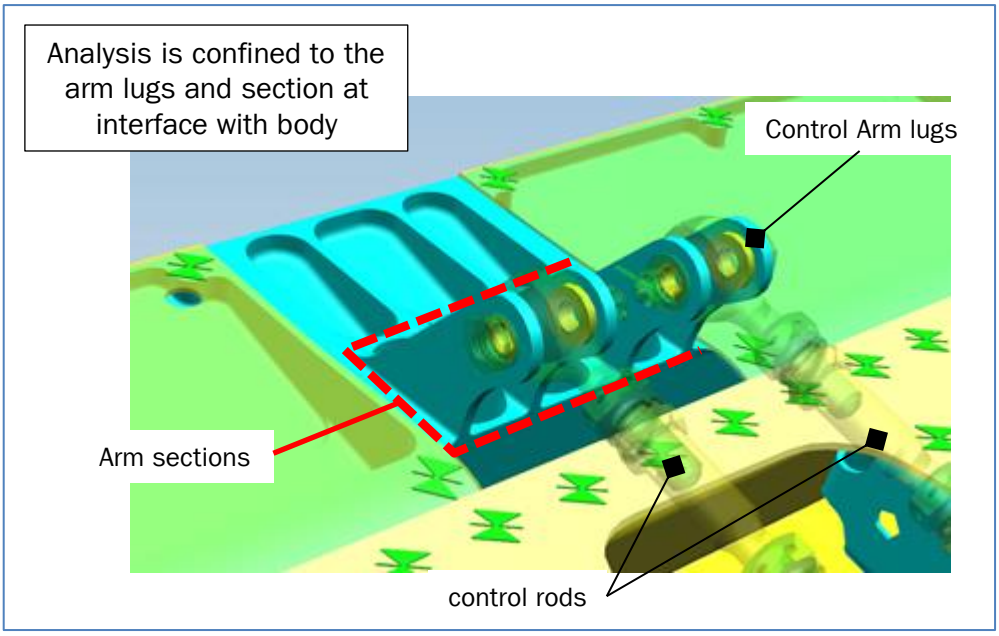

Figure 2-8 Aileron zone where FCS loading is applicable.

[7] It is assumed for the trim actuator to develop the static load case, a malfunction must occur within the actuator unit. Hence this case is considered as a failure case and a safety factor of 1.0 is applicable. Further, failure of a control rod is not considered as this would be a double failure.

2.3.8 Loading Id Register and DFEM Applicability

The loading described in the previous sections is presented in a tabular format in Table 2-12, together with a load case Id used thought this report.

								DFEM Applicability									
Aileron DFEM	Configuration Position	Analysis Set	Report Id	Load Type	Results are	Load Discription	Loading Ref.	Aileron Assy	Trim Tab	Balance Mass	Hinge Fittings	FCS Arm	W box Support	Loading Ref.	Load set	SPC Set Aero	MPC Set Aero
1000-1999: Aileron at -25deg [extreme up angle]																	
10	-25ail/0tab	1001	1081	Partial	Ult	FCS +ve Rod 9	ER-24-000547	-	-	-	-	Yes	-	ER-24-000215			FCS
10	-25ail/0tab		1082	Partial	Ult	FCS +ve Rod 9	ER-24-000547	-	-	-		Yes		ER-24-000215			FCS
[15]	-25ail/-15.57tab		1541	Partial	Ult	Trim Actuator stall load (SF=1.0), 2 Rods	ER-24-000547	-	Yes	-	-	-	-	TRD-24-00075-iss4			
[15]	-25ail/-15.57tab	1501	1542	Normal	Ult	Trim Actuator max operating (SF=1.5), 2 Rods,	ER-24-000547	-	Yes	-	-	-	-	TRD-24-00075-iss4			
[15]	-25ail/-15.57tab		1543	Failsafe	Ult	Trim Actuator max operating (SF=1.0), 1 Rod	ER-24-000547	-	Yes	-	-	-	-	TRD-24-00075-iss4			
2000-2999: Aileron at -22deg																	
20	-22ail/0tab	2000	2001	Normal	Ult	ED+AERO, ED1002811+MT12-502-AN225	ER-24-000368	Yes		-	Yes	-	Yes	Week 23			
3000-3999: Aileron at 0deg																	
30	0ail/0tab		3002	Normal	Ult	ED+AERO ED1000002+VG-MF-003_A5 [0ail0tab]	ER-24-000368	Yes	Yes	-	Yes	-	Yes	Week 23			
30	0ail/0tab	3000	3003	Normal	Ult	ED+AERO ED1000030+VG-MF-402_AN6 [0ail0tab]	ER-24-000368	Yes	Yes	-	Yes	-	Yes	Week 23			
30	0ail/0tab		3012	Failsafe	Ult	Subcase 3002, 1 flettner rod failed	ER-24-000547	-	Yes	-	-	-	-	Week 23			
30	0ail/0tab		3013	Failsafe	Ult	Subcase 3003, 1 flettner rod failed	ER-24-000547	-	Yes	-	-	-	-	Week 23			
30	0ail/0tab	3000	3051	Partial	Ult	Inertia, 18g +X(C270001)	CS23.659	Partial LE	-	Yes	-	-	-	CS23.659			
30	0ail/0tab		3052	Partial	Ult	Inertia, 18g -X(C270001)	CS23.659	only	-	Yes	-	-	-	CS23.659			
30	0ail/0tab	3000	3053	Normal	Ult	Inertia, 18g +Y(C270001)	ER-24-000545	Yes	-	Yes	Yes	Yes	Yes	CS23.391			
30	0ail/0tab		3054	Normal	Ult	Inertia, 18g -Y(C270001)	ER-24-000545	Yes	-	Yes	Yes	Yes	Yes	CS23.659			
30	0ail/0tab	3000	3055	Partial	Ult	Inertia, 36g +Z(C270001)	CS23.659	Partial LE	-	Yes	-	-	-	CS23.659			
30	0ail/0tab		3056	Partial	Ult	Inertia, 36g -Z(C270001)	CS23.659	only	-	Yes	-	-	-	CS23.659			
30	0ail/0tab	3001	3084	Partial	Ult	FCS +ve Rod 9	ER-24-000547	-	-	-	-	Yes	-	ER-24-000215			
30	0ail/0tab		3085	Partial	Ult	FCS -ve Rod 9	ER-24-000547	-	-	-	-	Yes	-	ER-24-000215			
30	0ail/0tab		3541	Partial	Ult	Trim Actuator stall load (SF=1.0), 2 Rods	ER-24-000547	-	Yes	-	-	-	-	TRD-24-00075-iss4			
30	0ail/0tab	3501	3542	Normal	Ult	Trim Actuator max operating (SF=1.5), 2 Rods,	ER-24-000547	-	Yes	-	-	-	-	TRD-24-00075-iss4			
30	0ail/0tab		3543	Failsafe	Ult	Trim Actuator max operating (SF=1.0), 1 Rod	ER-24-000547	-	Yes	-	-	-	-	TRD-24-00075-iss4			
4000-4999: Aileron at 3deg																	
40	3ail/0tab	4000	4004	Normal	Ult	ED+AERO ED1003102+MTS1-003-A066	ER-24-000368	Yes	Yes	-	Yes	-	Yes	Week 23			
40	3ail/0tab		4014	Failsafe	Ult	Subcase 3004, 1 flettner rod failed	ER-24-000547	-	Yes	-	-	-	-	Week 23			
5000-5999: Aileron at 10deg																	
50	10ail/0tab	5000	5005	Normal	Ult	ED+AERO ED1002776+MT12-202-A171 [10ail0tab]	ER-24-000368	Yes	Yes	-	Yes	-	Yes	Week 23			
50	10ail/0tab		5015	Failsafe	Ult	Subcase 5005, 1 flettner rod failed	ER-24-000547	-	Yes	-	-	-	-	Week 23			
6000-6999: Aileron at 15deg [extreme down angle]																	
60	15ail/0tab		6086	Partial	Ult	FCS Rod 9	ER-24-000547	-	-	-	-	Yes	-	ER-24-000215			
60	15ail/0tab		6087	Partial	Ult	FCS Rod 9	ER-24-000547	-	-	-	-	Yes	-	ER-24-000215			
[65]	15ail/12.89tab	6501	6541	Partial	Ult	Trim Actuator stall load (SF=1.0), 2 Rods	ER-24-000547	-	Yes	-	-	-	-	TRD-24-00075-iss4			
[65]	15ail/12.89tab		6542	Normal	Ult	Trim Actuator max operating (SF=1.5), 2 Rods,	ER-24-000547	-	Yes	-	-	-	-	TRD-24-00075-iss4			
[65]	15ail/12.89tab		6543	Failsafe	Ult	Trim Actuator max operating (SF=1.0), 1 Rod	ER-24-000547	-	Yes	-	-	-	-	TRD-24-00075-iss4			
7000 - 7999: Miscellaneous Cases																	
30	applicable to	7000	7091	Partial	Limit	Thermal Loading, Cold Operational -65° C	ER-24-000239	Yes	-	-	-	-	-				
30	all angles		7092	Partial	Limit	thermal Loading, Hot Operational +50° C	ER-24-000239	Yes	-	-	-	-	-				

Table 2-12: Load case registry

2.4 DFEM Descriptions

The foundation for the aileron and support structure analysis a set of finite element models. This set consists of:

Aileron installation	FEM [1][8]	Primary FEM
LE Balance mass assy	FEM [9]	Compliments FEM [1] for inertia cases.
Hinge fittings (H2 & H3)	FEM [8]&[9]	Solid CTET10 models of a single part.
Trim Tab	FEM [11]	Solid CTET10 model of a single part.
Support structure (H1, H2 & H3)	FEM [14],[15]&[16]	Solid CTET10 models of a single part.

The set of FEM's is shown pictorially in Figure 2-9.
Model descriptions and QA checks for all the FEM's used in this report can be found in ref. [17]. However to aid readability of this report a brief overview of each model is given in the following section.

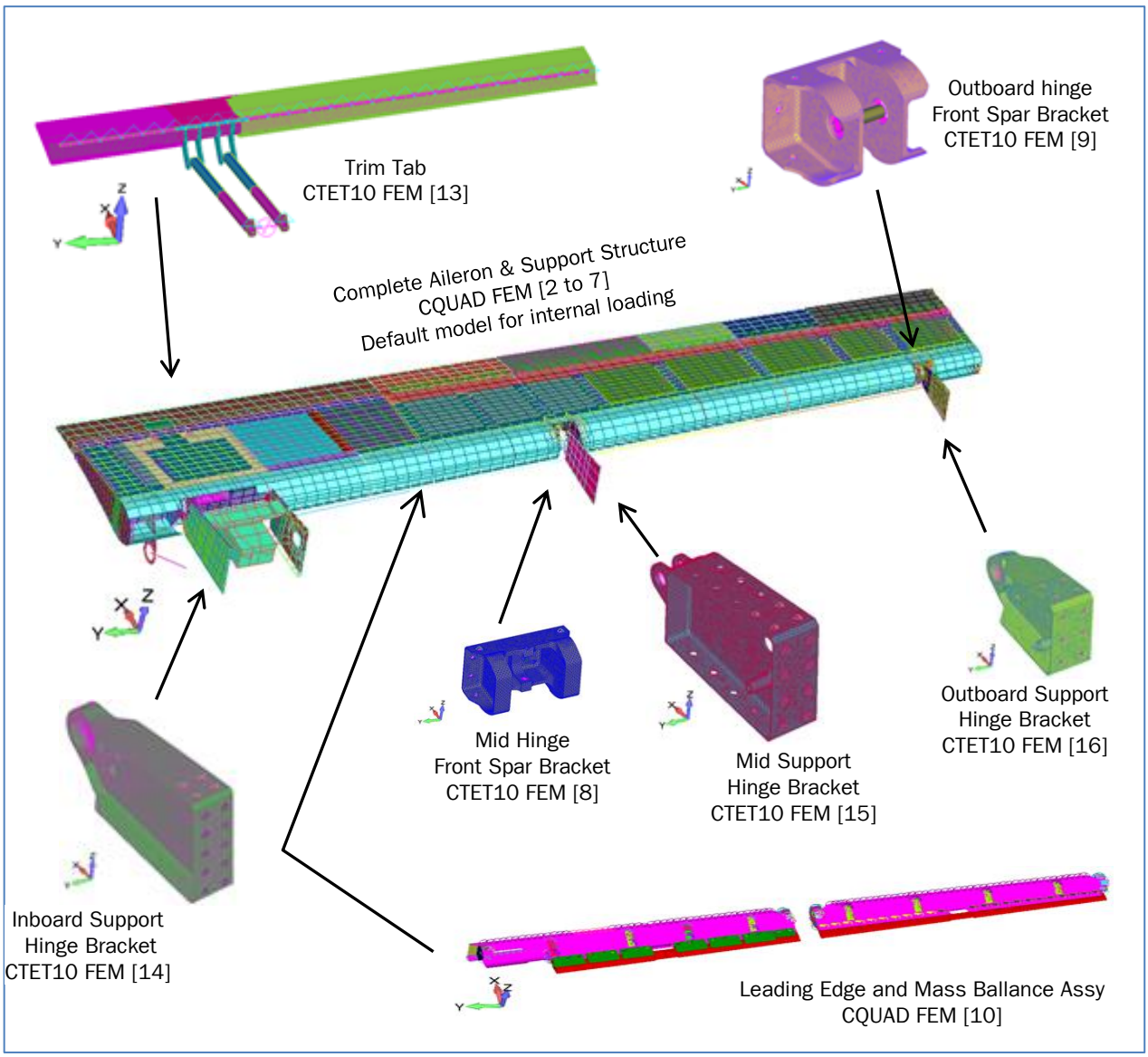

[8] Master file; each aileron angle has its own FEM id.

Figure 2-9 Overview of FE models used in this report.

2.4.1 Aileron Installation

This is the primary FEM used for analysis of the aileron. An overview of the mesh is shown in Figure 2-10, with the exception of a few minor changes (see appendix B) it identical to the mesh used in GFEM5.0.0. ref. [16].

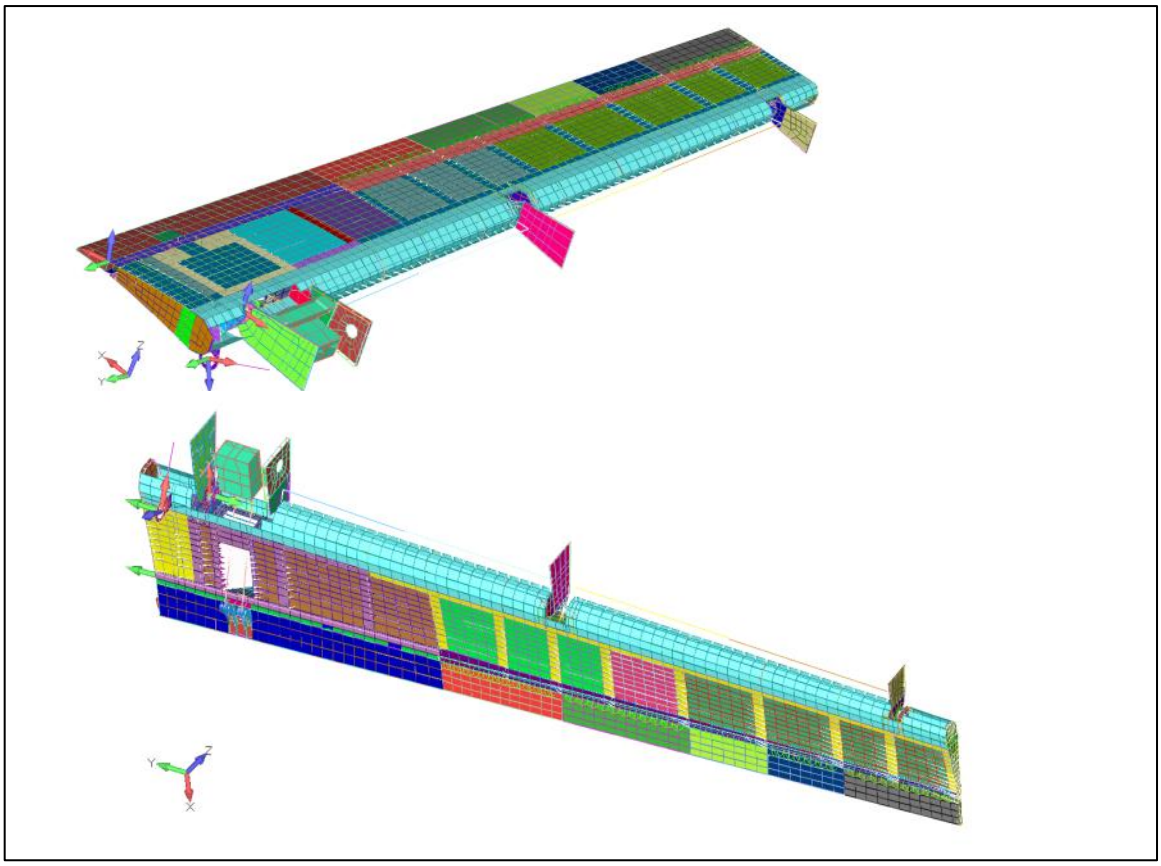

Figure 2-10 Aileron installation FEM [1]

Inherently the aileron is free to rotate about it hinge line. This freedom is removed by two constraint (SPC) sets. Selection is dependent on the type of loading:

- Primary loading from aerodynamic pressure.
  Aileron control system reacting the aerodynamic loads at FCS rod 9 (DOF123)
- Primary loading from FCS forces.
  Hinge line artificially locked at mid and outboard hinges (DOF 1235).

2.4.2 Mass Balance Support

The primary objective of this standalone FEM is to substantiate inertia loading defined in section 2.3.3.2.

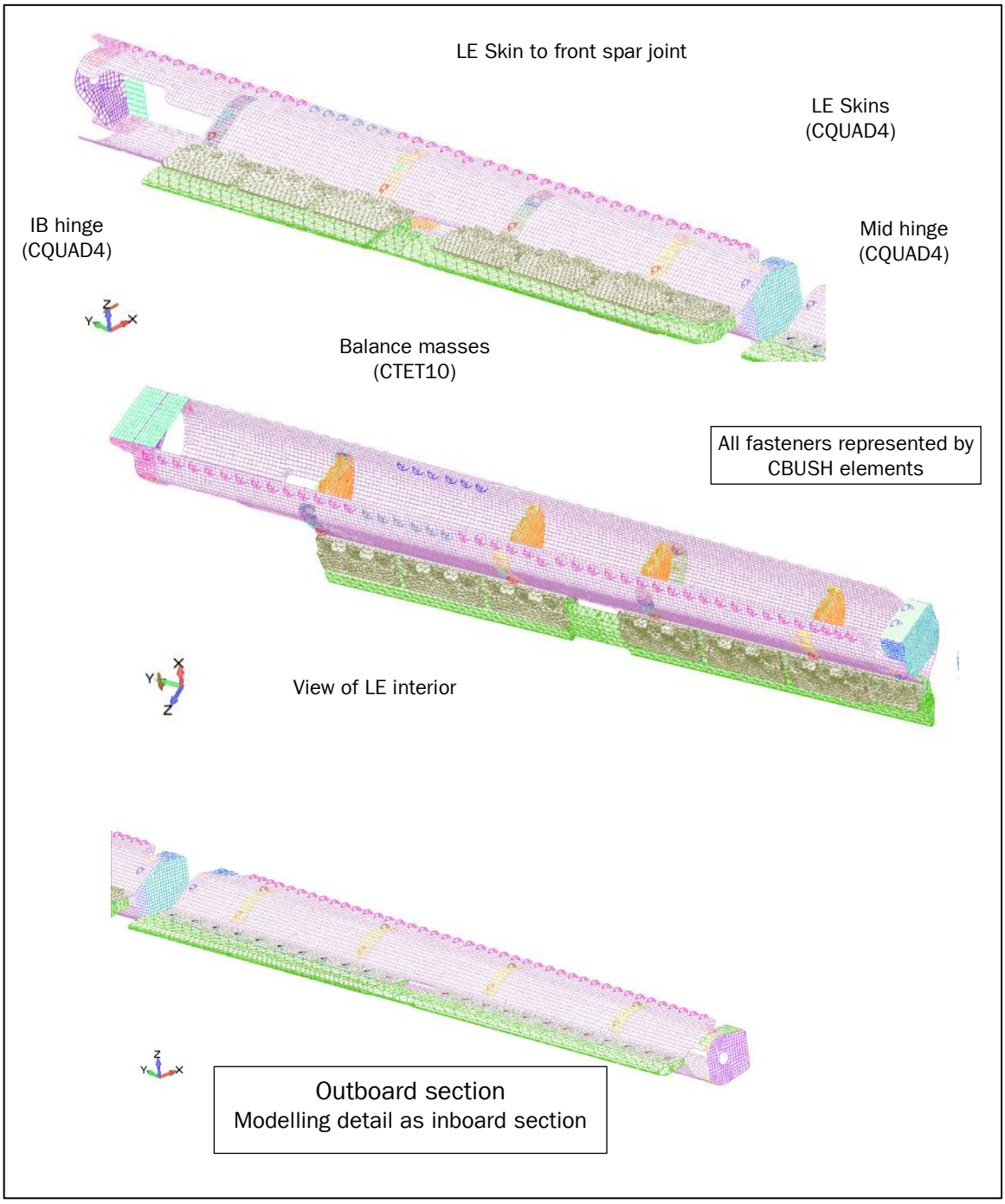

Figure 2-11 Mass balance support DFEM inboard section

The model is loaded by inertia forces (body accelerations). For the accurate generation of resulting grid forces the model mass must represent the actual assembly mass. Typically FE model mass[9] is

[9] Only structural parts are represented. Fillets, fasteners, system parts, paint/joint compound etc. are missing.

significantly less than actual. The model mass has been “tuned”; mass verification is demonstrated in Table 2-13.

Part Name	Part No.	BOM Kg	Fem Mg	Fem Kg	Comments
LE IB Upper Skin	5576024425/-/	0.334	3.26E-04	0.326	2124-T851, density rounded up
LE OB Upper Skin	5576024427/-/	0.311	3.04E-04	0.304	2024-T3, density rounded up
LE IB Lower Skin	5576024431/B/	0.379	3.70E-04	0.370	Densimet, density rounded up
LE OB Lower Skin	5576024433/-/	0.339	3.32E-04	0.332	
IB hinge (incomplete)	5576024397/-/	0.068	6.75E-05	0.068	
Nose Rib 3	5576024363/-/	0.023			
Nose Rib 4	5576024365/-/	0.019	7.96E-05	0.080	
Nose Rib 5	5576024367/-/	0.023			
Nose Rib 6	5576024369/-/	0.017			
Mid Hinge fitting	5576024371/-/	0.176	0.00011	0.109	
Nose Rib 8	5576024373/-/	0.016			
Nose Rib 9	5576024375/-/	0.015	5.99E-05	0.060	
Nose Rib 10	5576024377/-/	0.014			
Nose Rib 11	5576024379/-/	0.013			
OB hinge fitting (incomplete)	5576024381/-/	0.033	3.00E-05	0.030	
Balance 1	5576024197/A/	3.165	0.00318	3.176	
Balance 2	5576024201/A/	3.447	0.00346	3.461	
Balance 3	5576024199/A/	1.759	0.00177	1.767	
Balance 4	5576024203/A/	1.479	0.00148	1.485	
Aux Balance type 1 (12 off)	5576024210/A/	1.320	0.00135	1.350	
Aux Balance type 2 (6 off)	5576024213/-/	0.216	0.00022	0.222	
IB attachment bolts (18 off)		0.126	0.00013	0.126	
Mid attachment bolts (12 off)		0.096	0.00010	0.096	
OB attachment bolts (13 off)		0.078	0.00008	0.078	
	Total	13.465		13.436	
				100%	% of BOM

Table 2-13 LE balance mass, model mass verification.

2.4.3 Flettner Trim Tab

Analysis for the trim tab body is based on a FE approach. The model is identified as FEM [11] in this report. An overview of the FEM's location within the aileron assembly is given in Figure 2-9 and a brief overview in Figure 2-12. Model details and qualification checks can be found in ref.[17].
To improve accuracy of surface stress recovery, the (structural) CTET10 elements are "skinned" with thin (0.001mm) membrane CTRIA6 elements.
Analysis has to be performed at multiple angular aileron/tab configurations. To facilitate this, a hierarchy or coordinate systems (slaved to the level above) is utilized and grid definition coordinate salved to the appropriate coordinate level.

Aileron coordinate	C2710001
Trim tab coordinate	C10002
Control arm lugs	C1000
Trim tab control rods	C1001

The object of the coordinate system hierarchy is to enable setting an aileron/tab angular position by simply rotating the Y axis of C2710001 (aileron) and C10002 (tab).

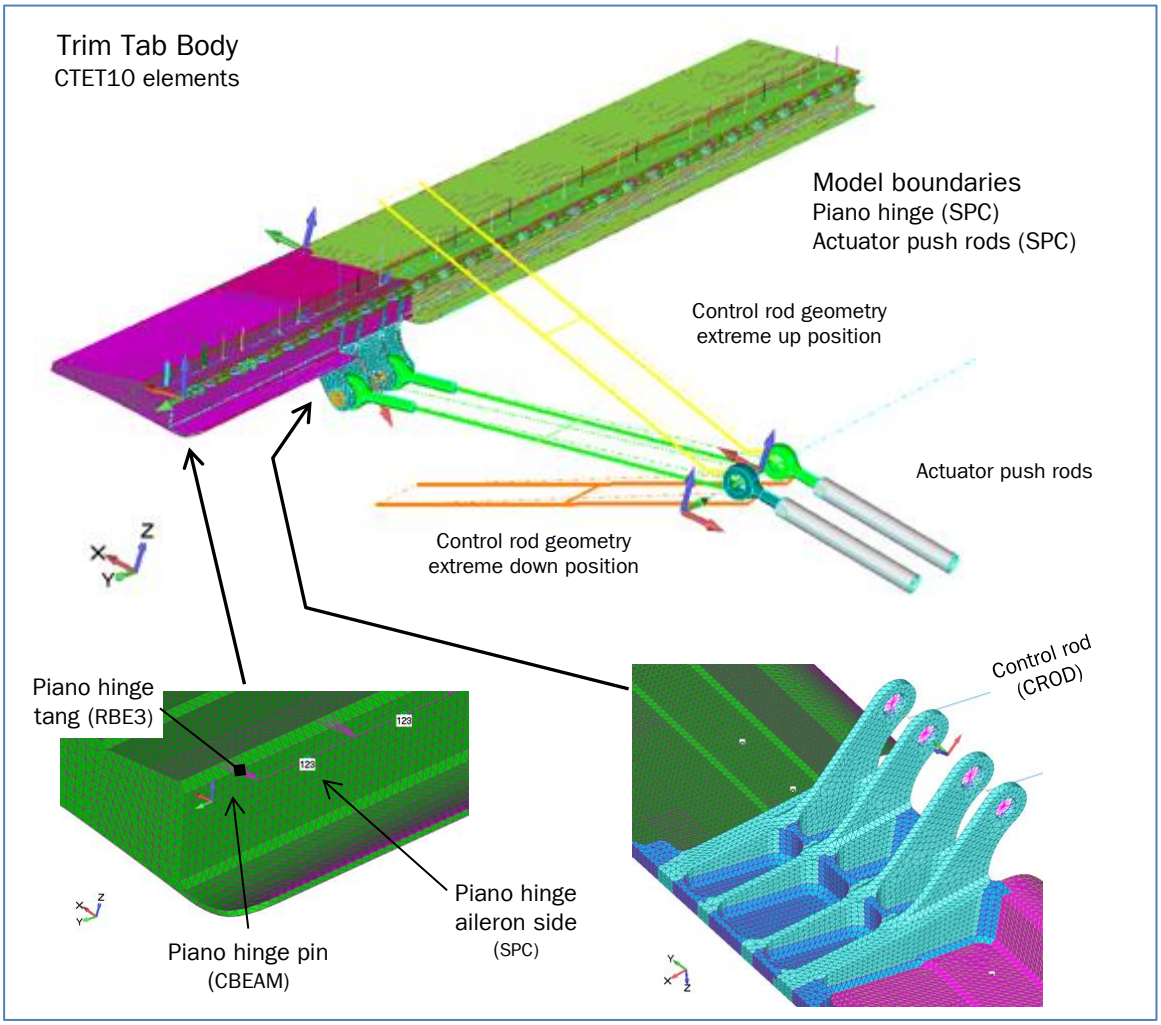

Figure 2-12 Overview of trim tab FEM [11].

2.4.4 Front Spar Hinge Fittings

2.4.4.1 Mid Hinge Fitting FEM

Analysis for the front spar hinge fitting is based on a FE approach. The model is identified as FEM [8] in this report. An overview of the FEM's location within the aileron assembly is given in Figure 2-9 and a brief overview in Figure 2-13.
To improve accuracy of surface stress recovery, the (structural) CTET10 elements are "skinned" with thin (0.001mm) membrane CTRIA6 elements.
Model details and qualification checks can be found in ref.[17].

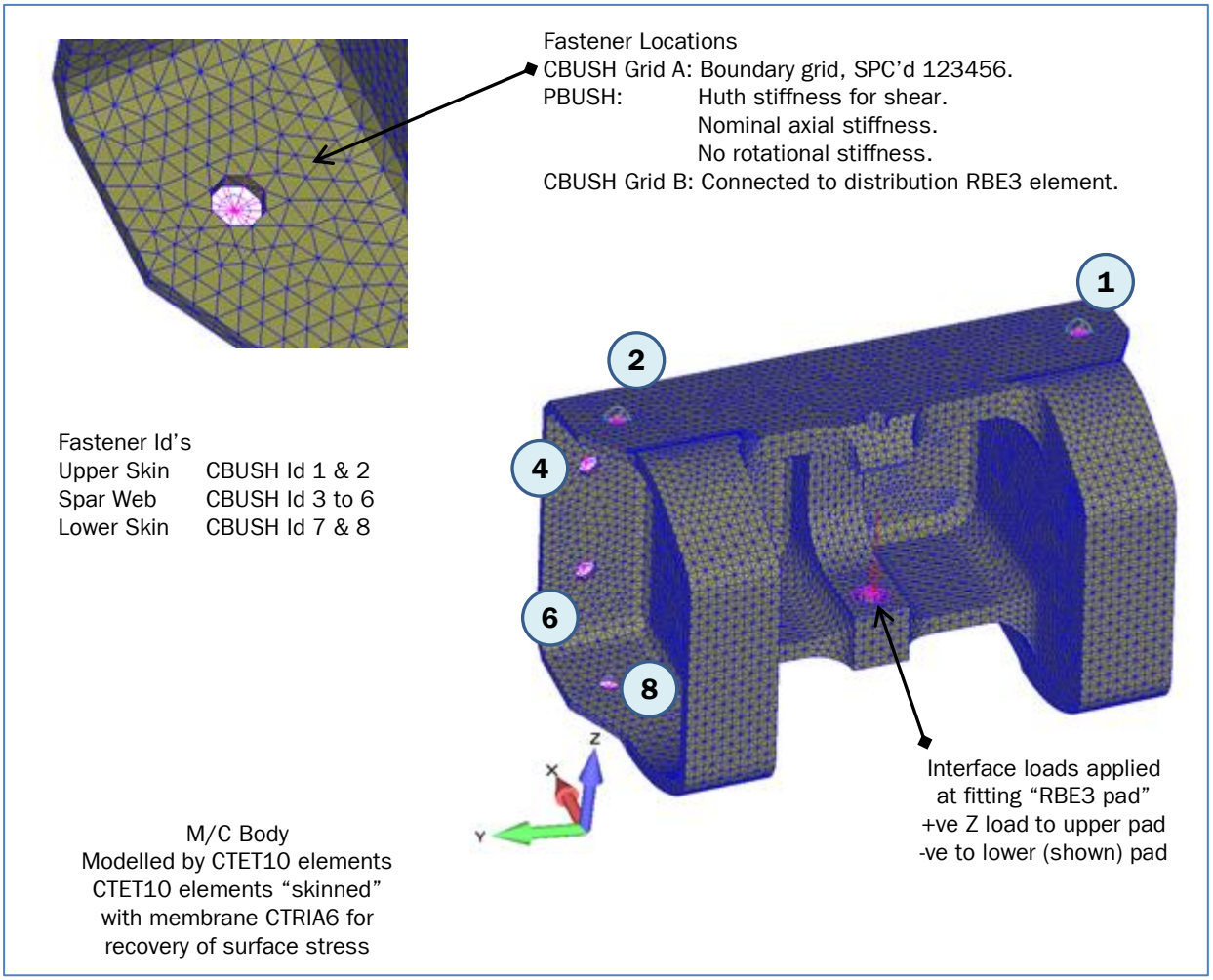

Figure 2-13 Overview of front spar mid hinge fitting, FEM [8].

2.4.4.2 Outboard Hinge Fitting FEM

Analysis for the front spar hinge fitting is based on a FE approach. The model is identified as FEM [9] in this report. An overview of the FEM's location within the aileron assembly is given in Figure 2-9 and a brief overview in Figure 2-14.
To improve accuracy of surface stress recovery, the (structural) CTET10 elements are "skinned" with thin (0.001mm) membrane CTRIA6 elements.
Model details and qualification checks can be found in ref.[17].

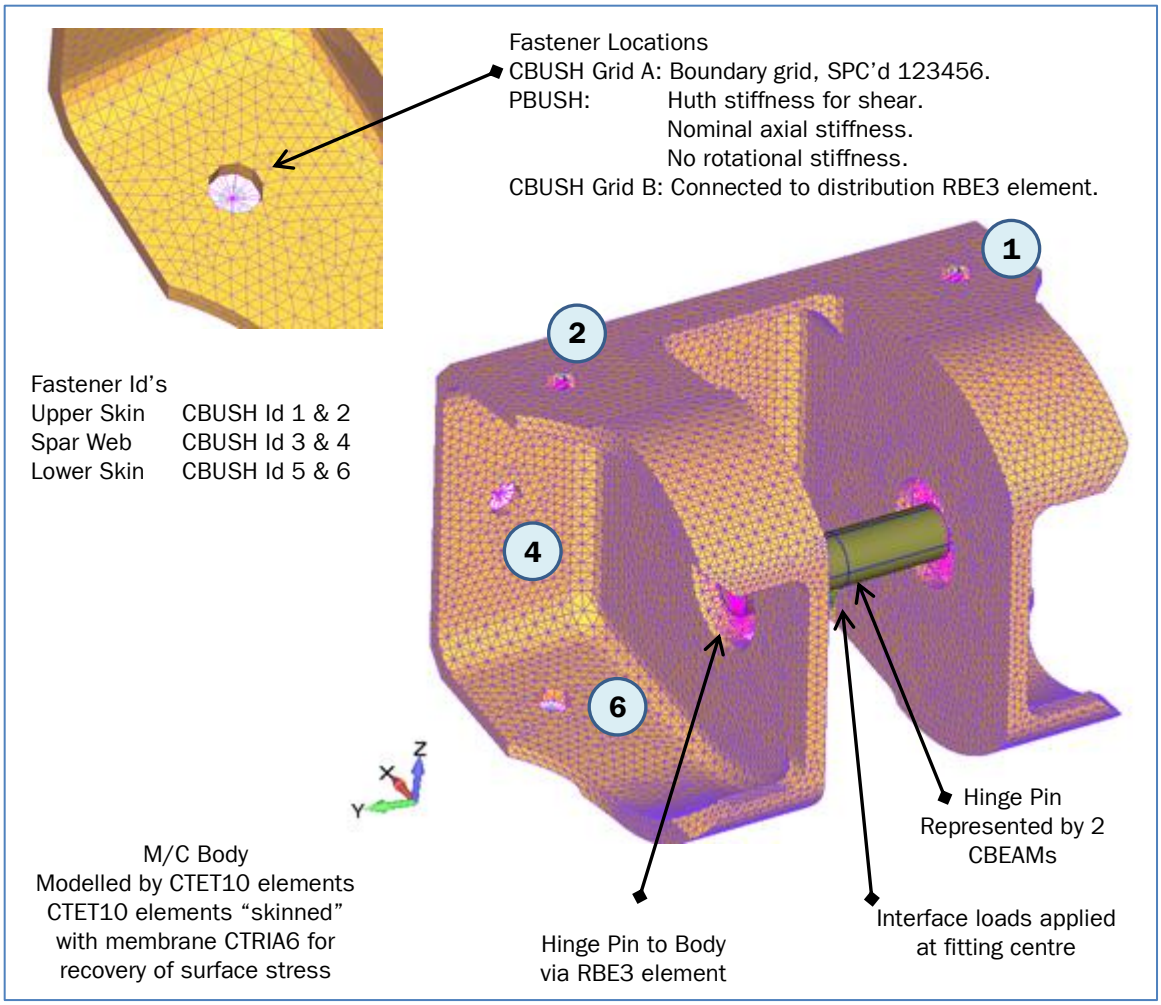

Figure 2-14 Overview of front spar OB hinge fitting, FEM [9].

2.4.5 Support Structure

2.4.5.1 Inboard Hinge Support DFEM

Analysis for the aileron inboard support bracket is based on a FE approach. The model is identified as FEM [14] in this report. An overview of the FEM's location within the aileron assembly is given in Figure 2-9 and a brief overview in Figure 2-15.
To improve accuracy of surface stress recovery, the (structural) CTET10 elements are "skinned" with thin (0.001mm) membrane CTRIA6 elements.
Model details and qualification checks can be found in ref.[17].

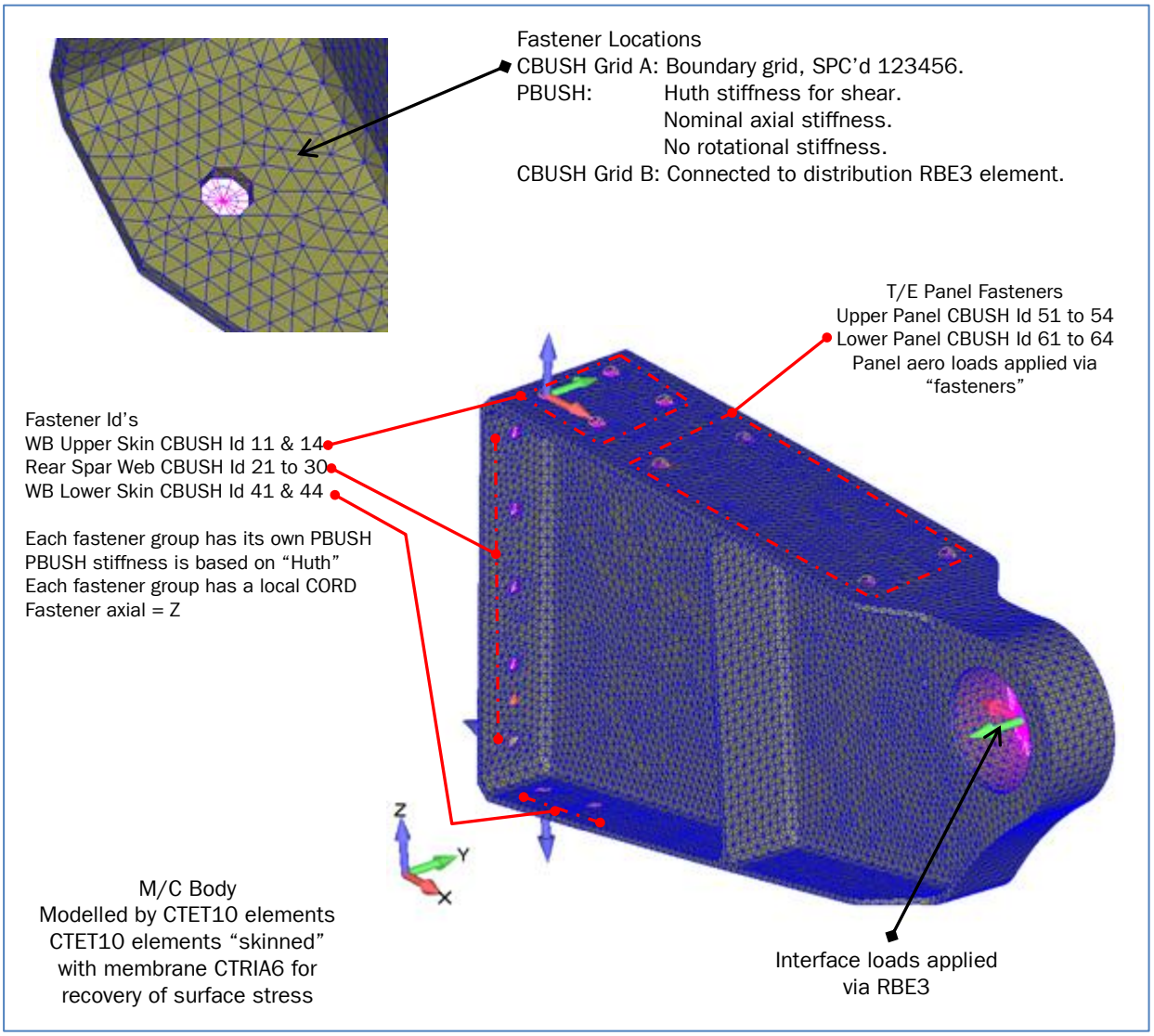

Figure 2-15 Overview of IB support bracket, FEM [14].

2.4.5.2 Mid Hinge Support DFEM

Analysis for the aileron mid support bracket is based on a FE approach. The model is identified as FEM [15] in this report. An overview of the FEM's location within the aileron assembly is given in Figure 2-9 and a brief overview in Figure 2-16.
To improve accuracy of surface stress recovery, the (structural) CTET10 elements are "skinned" with thin (0.001mm) membrane CTRIA6 elements.
Model details and qualification checks can be found in ref.[17].

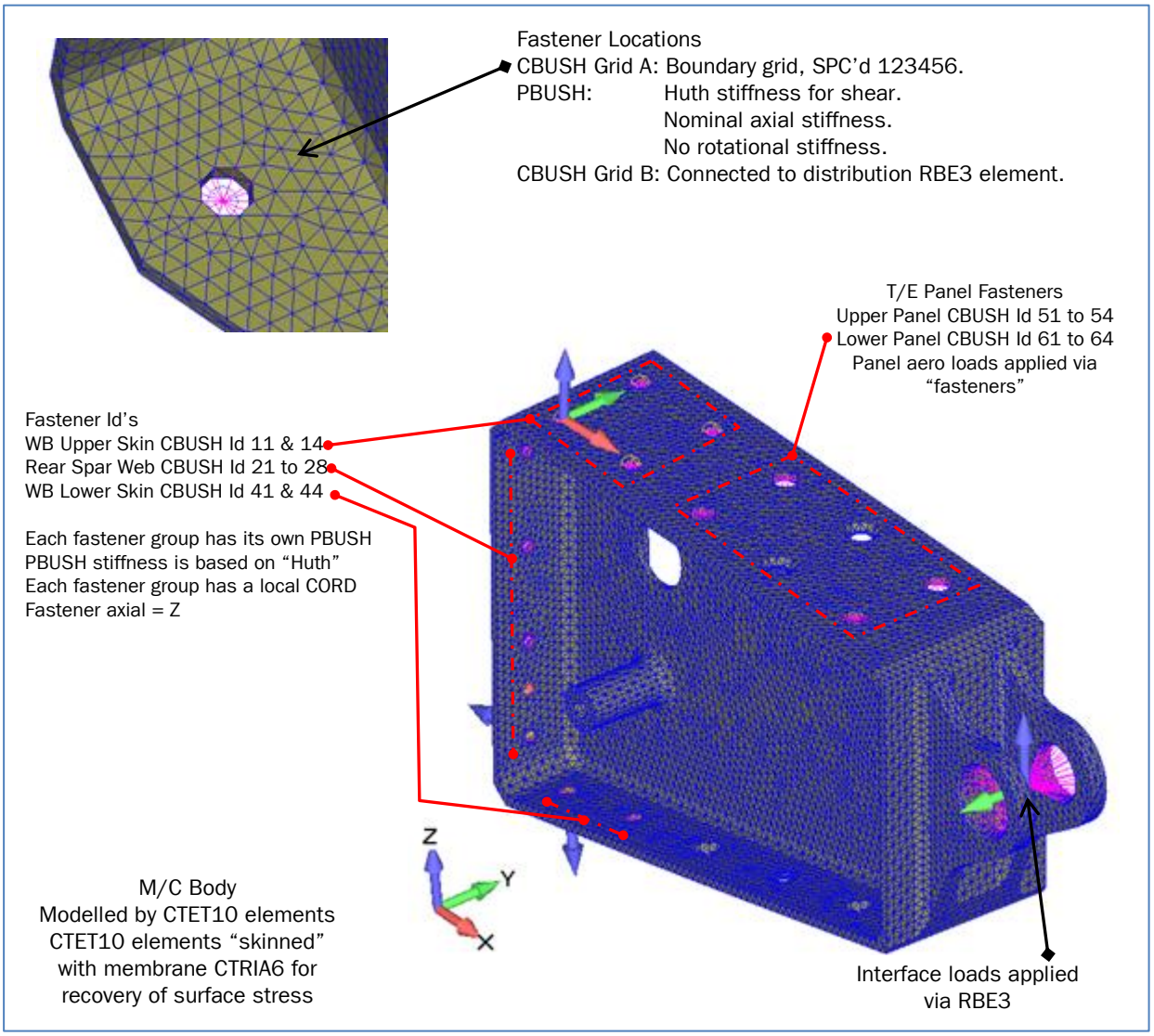

Figure 2-16 Overview of mid support bracket, FEM [15].

2.4.5.3 Outboard Hinge Support DFEM

Analysis for the aileron mid support bracket is based on a FE approach. The model is identified as FEM [16] in this report. An overview of the FEM's location within the aileron assembly is given in Figure 2-9 and a brief overview in Figure 2-17.
To improve accuracy of surface stress recovery, the (structural) CTET10 elements are "skinned" with thin (0.001mm) membrane CTRIA6 elements.
Model details and qualification checks can be found in ref.[17].

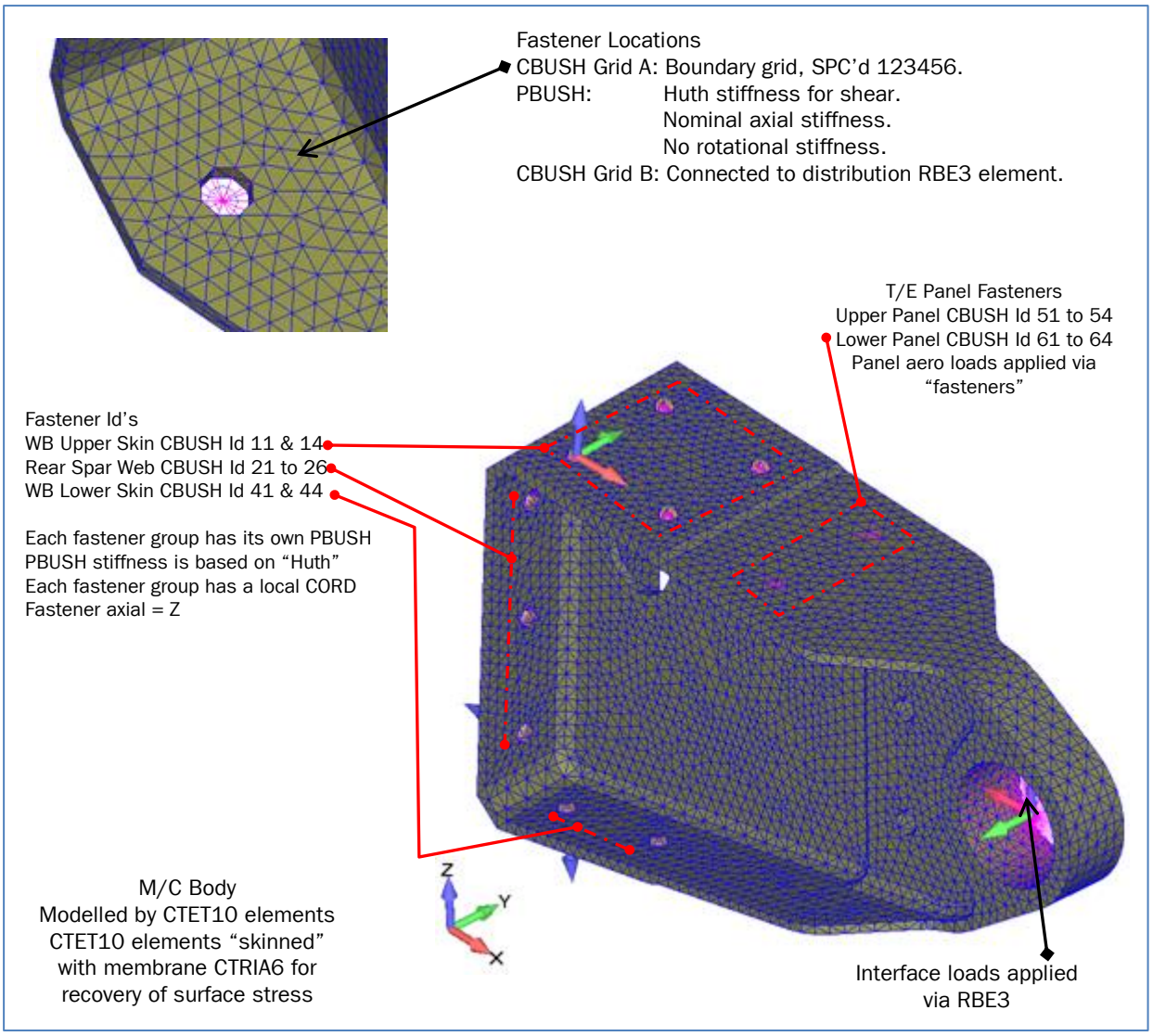

Figure 2-17 Overview of OB support bracket, FEM [16].

2.5 Aileron Analysis

2.5.1 Introduction

From a structural point of view the aileron consists of:

A support structure.	Three hinge brackets attached to the wing box.
A central torque box.	Principal structural element.
A leading edge.	Incorporating the balance mass.
A trim tab	“Piano hinged” to aileron box
A trailing edge	Segmented CFRP parts

The aileron structural parts are shown in Figure 2-18

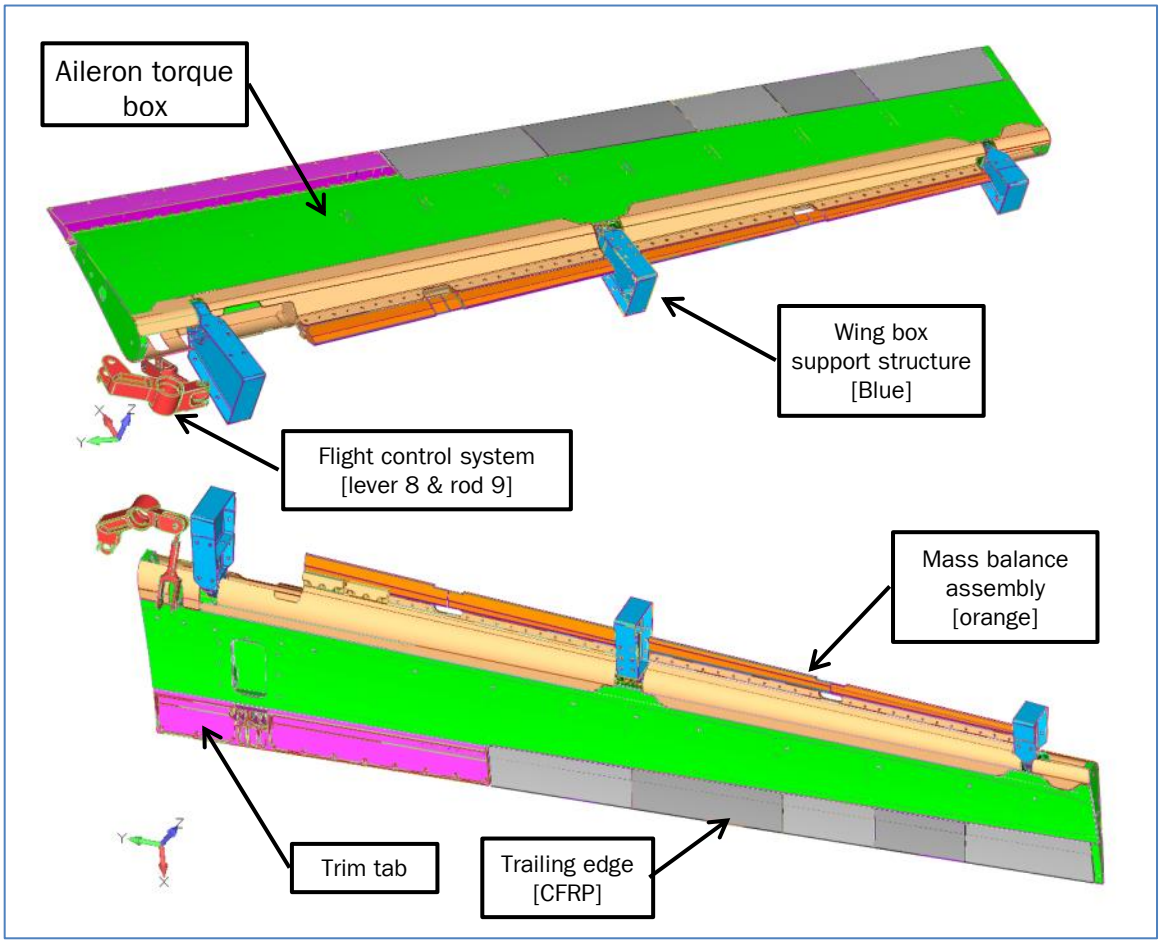

Figure 2-18 Aileron principal structural components.

The main structural element of the aileron is a torque box. The box is formed from:

- Upper and lower skins
- Front and rear spars

To stabilize and introduce local loading, ribs have been added. This subdivides the box in to a set of panels. The arrangement can be seen in Figure 2-19.

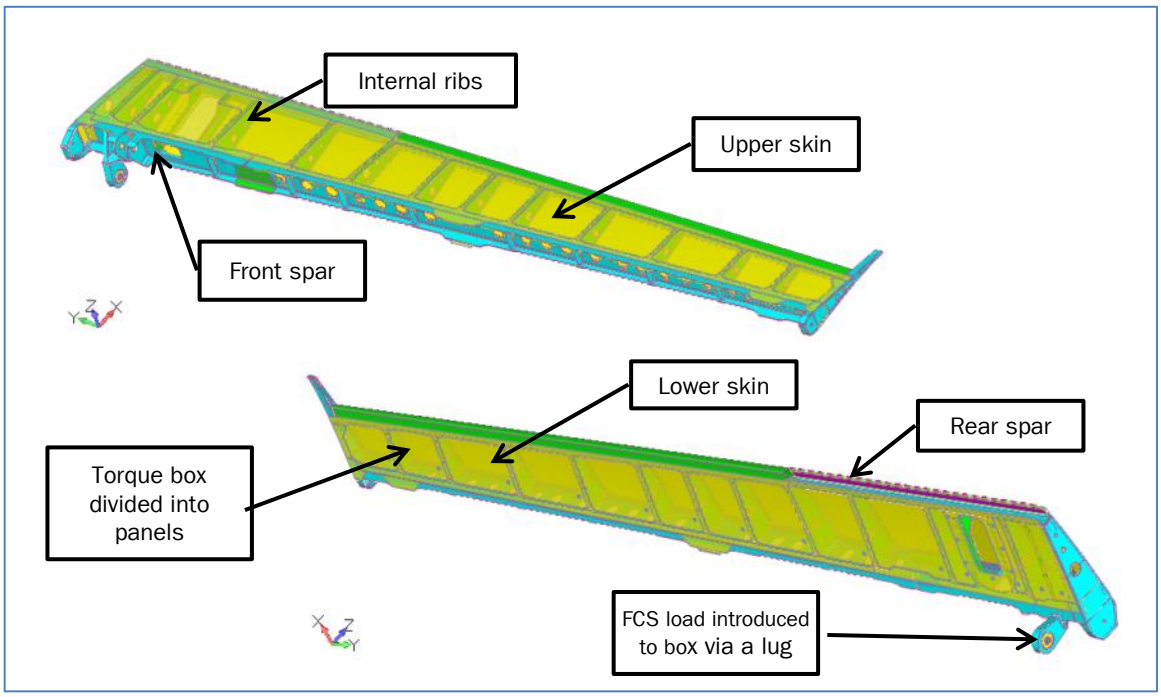

Figure 2-19 The aileron (torque) box

Sections through the aileron assembly at three planes are shown in Figure 2-20.

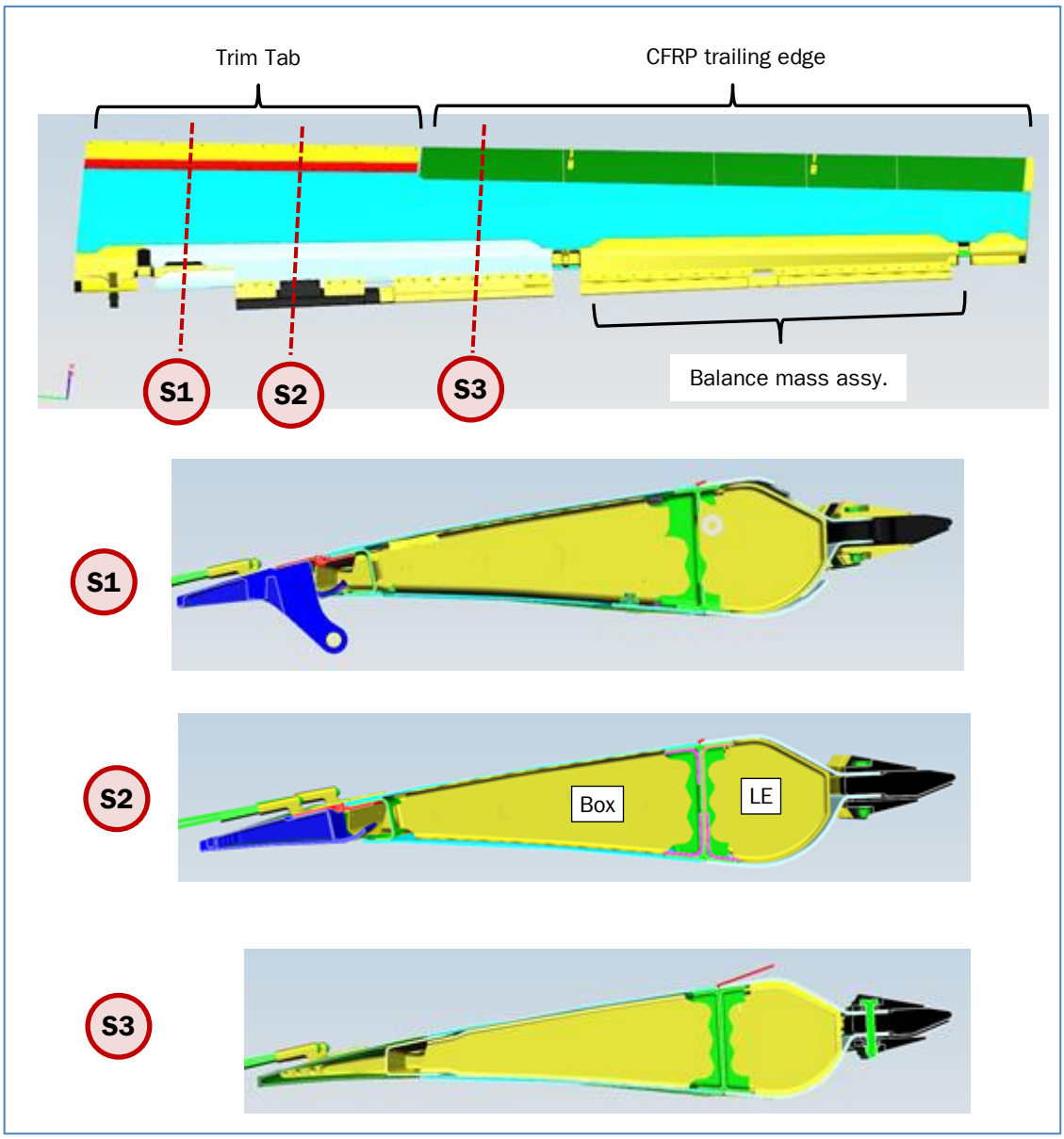

Figure 2-20 Typical sections through the aileron

2.5.2 Buckling Policy

The buckling policy for the PC-24 is defined in ref. [1] section 7.5
Typically for the wing assembly the buckling criterion is:

- All parts: No buckling below ultimate loads.

The box consists of skin panels, bounded by riveted ribs and spars.
For this arrangement ref. [1] figure 7.5 allows

- No elastic buckling below 0.7 x LIMIT load (0.7 LL).
- No permanent buckling below 1.0 x LIMIT load (LL).

However from a perspective of aerodynamic efficiency, a more conservative approach has been used for the skin panels. This guarantee that the skin aerodynamic shape is maintained up to 100% limit load.

In summary the aileron buckling policy is:

- All parts except box skins No buckling below 1.0* ultimate load (UL)
- Aileron box skins No buckling below 1.0*limit load (LL)

2.5.3 Failsafe Aspects

No aileron installation failsafe cases are considered except for:

- Trim tab dual control rods and associated lugs.

Two control rods are used to operate the trim tab, see Figure 2-21.

- One (of two) control rod load paths may fail when considering:
  - Aerodynamic loading.
  - Max actuator operating actuator load[10].

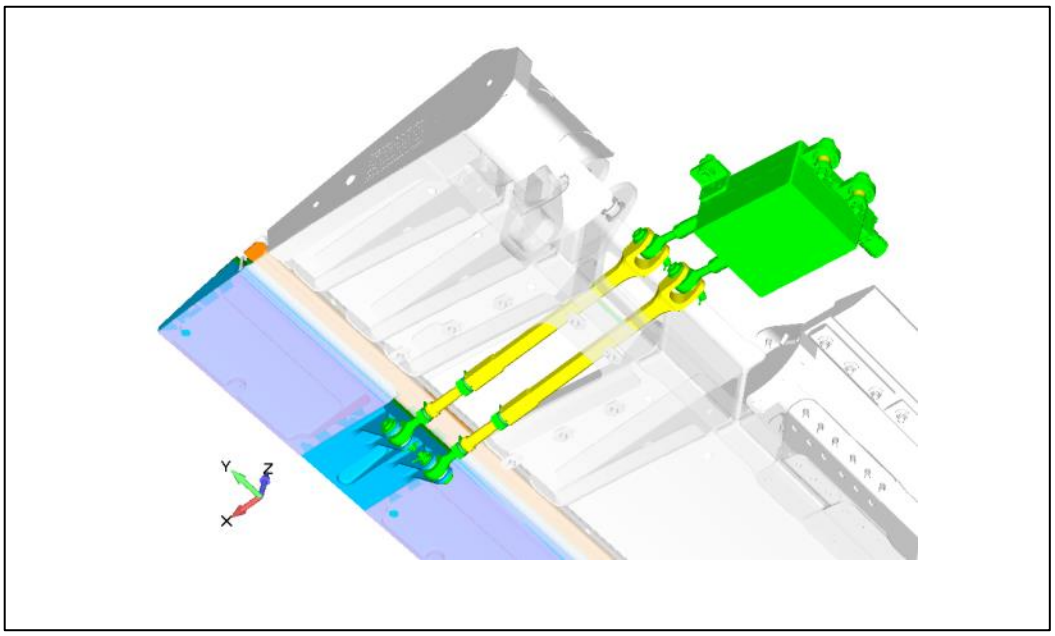

Figure 2-21 LHS flettner control rods

[10] It is assumed for the trim actuator to develop the static load case, a malfunction must occur within the actuator unit. Hence this case is considered as a failure case and a safety factor of 1.0 is applicable. Further, failure of a control rod is not considered as this would be a double failure.

2.5.4 Organization of Calculation files

The analysis is principally carried out by a set of Excel files (Table 0-1) which process internal loading forces and moments from a set of FE models (Table 0-4).

Calculation file	[2]	Aileron Box (front & rear spars, skink and ribs)
Calculation file	[8]	Front spar details, lug, cut-out and splice
Calculation file	[9]	Leading edge balance mass assembly
Calculation file	[12]	Front spar discrete hinge fittings.
Calculation file	[13]	Trim tab assembly
Calculation file	[14]	Aileron support structure
Calculation file	[15]	CFRP trailing edge

Supporting the main calculation files are PESS files; these are organised in three types:

PC24_xxxxPESS_analysis.pess	PESS analysis “run” file.
PC24_yyyy_PESS_Panel Report.xlsx	PESS analysis output report.
PC24_iiii_LoadExtraction.xlsx	PESS intermediate loading & geometry file.

All the main calculation files are organised in a similar manner. This is illustrated in Figure 2-22.

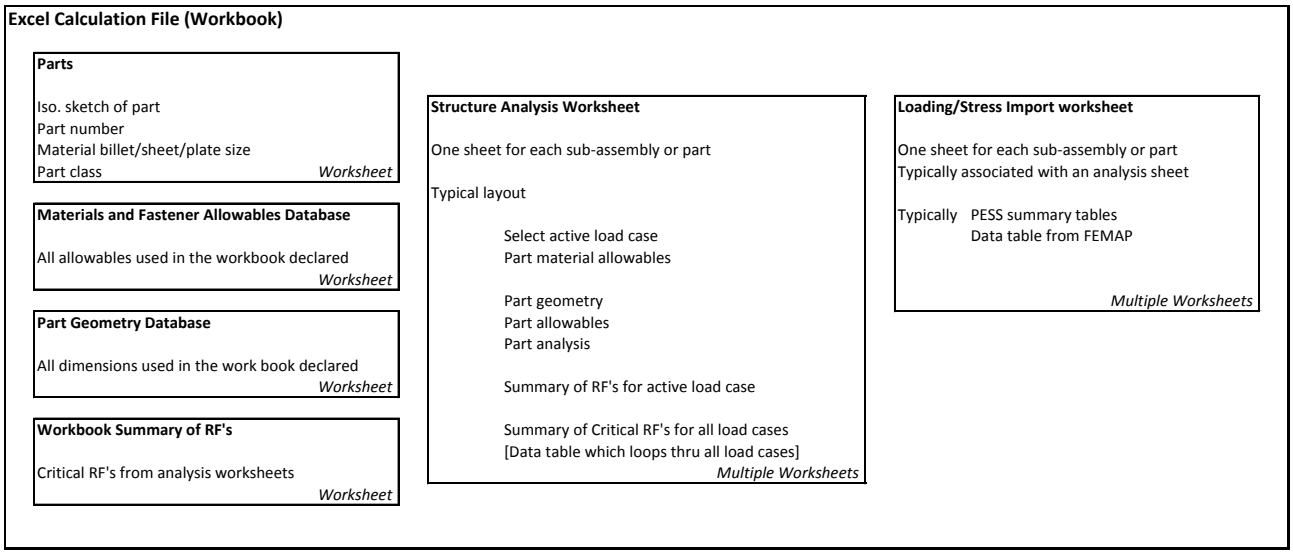

Figure 2-22 Typical worksheet arrangement of calculation files

2.5.5 PESS Analysis Notes

Extensive use is made of PESS analysis modules. A key aspect of PESS analysis modules is organisation of FEMAP model group to represent parts. Table 2-14 gives an overview of the PESS group naming policy.

Part	Base Name	Group Id	Example
UPPER SKINS		1xxxxx	
Upper leading edge skin	Uskin_LE_PANEL_	11xxxx	Bay 4: *Uskin_LE_PANEL_11040*
Upper main skin	Uskin_box_PANEL_	12xxxx	Bay 10: *Uskin_box_PANEL_12100*
Upper trailing edge skin	Uskin_TE_PANEL_	13xxxx	Bay 6: *Uskin_TE_PANEL_13060*
Lower skins	Lskin_	2xxxx	
Lower leading edge skin	Lskin_LE_PANEL_	21xxx	Bay 1: *Lskin_LE_PANEL_21010*
Lower main skin	Lskin_box_PANEL_	22xxx	Bay 13: Lskin_box_PANEL_22130
Lower trailing edge skin	Lskin_TE_PANEL_	23xxx	Bay 11: Lskin_TE_PANEL_23110
RIBS		3xxxx	
Leading edge ribs	Rib_LE_PANEL_	31xxx	Rib 8: .Rib_LE_PANEL_31080
Main ribs	Rib_box_PANEL	35xxx	Rib 2b: Rib_box_PANEL_35022
Main ribs upper cap	RibUC_box_STRINGER_	36xxx	Rib 1a: RibUC_box_STRINGER_36011
Main ribs lower cap	RibLC_box_STRINGER_	37xxx	Rib 2a: RibLC_box_STRINGER_37021
SPARS		4xxxx	
Front spar webs	Fspar_web_PANEL_	41xxx	Bay 3c: Fspar_web_PANEL_41033
Front spar upper cap	Fspar_UC_STRINGER_	42xxx	Bay 5: Fspar_UC_STRINGER_42050
Front spar lower cap	Fspar_LC_STRINGER_	43xxx	Bay 12: Fspar_LC_STRINGER_43120
Rear spar webs	Rspar_web_PANEL_	45xxx	Bay 2: Rspar_web_PANEL_45020
Rear spar upper cap	Rspar_UC_STRINGER_	46xxx	Bay 7: Rspar_UC_STRINGER_46060
Rear spar lower cap	Rspar_LC_STRINGER_	47xxx	Bay 1: Rspar_LC_STRINGER_47010

Table 2-14 PESS analysis group names

It should be noted that FEMAP group Id's have been numbered in an orderly manner however they have no significance for PESS analysis. PESS uses the end numeric part of the group name as panel and stringer Id's.

2.5.5.1 Panel Load Extraction using PESS

The PESS FE Data module is used to determine a single panel load vector from the group of elements representing a panel. Two recovery methods are available:

FBD+SC (LRM010)
Average (LRM020)

Typically panel loading is recovered using both methods. Two files are generated; the method used is indicated in the file title. For example:

PC24_Aileron_box_ELavg_Panel_DFEM30_LoadExtraction(Panel_Output).xlsx Calc file [202]
PC24_Aileron_box_FBD-SC_Panel_DFEM30_LoadExtraction(Panel_Output).xlsx Calc file [206]

For panel buckling analysis, the recovery method is adapted to the type of panel under consideration:

Curved panels, no holes or cut-outs	LRM020
Flat panels, with or without holes and cutouts	LRM010 or LRM020

If the flat panel is subject to significant in plane bending (i.e. a spar) the LRM010 method must be selected.
The two methods give differing panel vectors. For example, using calc files [202] & [203].

Rib 2, PESS panel Id. 35020, LC 3002

PANEL_ID	LC_ID	Fx	Fy	Fxy	Mx	My	Fx,Load	Fy,Load	Fxy,Load	Fxy,Load	Mx,Load	My,Load	F1x	F1y	M1z	F2x	F2y	M2z	F3x	F3y	M3z	F4x	F4y	M4z
		N/mm	N/mm	N/mm	Nmm/mm	Nmm/mm	N	N	N	N	Nmm	Nmm	N	N	Nmm	N	N	Nmm	N	N	Nmm	N	N	Nmm
35020	3002	-0.982568181	-12.00252552	-10.98760975	0	0	-184.0047877	-596.731704	-2057.641229	-546.2729552	0	0												
35020	3003	0.091350938	10.04538862	9.022695749	0	0	17.10721993	499.4283793	1689.673296	448.5829753	0	0												
35020	3051	0.028361712	-1.984747886	0.547593379	0	0	5.311275963	-98.67606497	102.547391	27.22479777	0	0												
35020	3052	-0.028361712	1.984747886	-0.547593379	0	0	-5.311275963	98.67606497	-102.547391	-27.22479777	0	0												
35020	3053	0.012459533	0.275529123	0.473847694	0	0	2.333287151	13.69853061	88.73709326	23.55837038	0	0												
35020	3054	0.017310684	0.102682182	0.54979203	0	0	3.241758425	5.105068359	102.9591308	27.33410853	0	0												
35020	3055	-0.068772625	-0.02152832	-0.876571987	0	0	-12.87899656	-1.070327311	-164.154962	-43.58068596	0	0												
35020	3056	0.066227203	0.023398238	0.795321748	0	0	12.40231741	1.16329439	148.9392923	39.54115334	0	0												

Table 2-15 PEPC24_Aileron_box_ELavg_Panel_DFEM30_LoadExtraction(Panel_Output), [202]

PANEL_ID	LC_ID	F_x	F_y	F_{xy}	M_x	M_y	$F_{x,Load}$	$F_{y,Load}$	$F_{xy,Load}$	$F_{xy,Load}$	$M_{x,Load}$	$M_{y,Load}$	$F1_x$	$F1_y$	$M1_z$	$F2_x$	$F2_y$	$M2_z$	$F3_x$	$F3_y$	$M3_z$	$F4_x$	$F4_y$	$M4_z$
		N/mm	N/mm	N/mm	Nmm/mm	Nmm/mm	N	N	N	N	Nmm	Nmm	N	N	Nmm	N	N	Nmm	N	N	Nmm	N	N	Nmm
35020	3002	-0.335245	-2.463168	-12.69706	96.696115	-5.772129	-62.76104	-122.4617	-2377.768	-631.2619	18108.207	-286.974	682.56975	506.38335	-2642.029	-168.2955	-2309.303	19495.987	-554.6156	62.104458	-1375.561	-44.52558	1725.9081	-16694.41
35020	3003	-0.51053	2.0470223	3.7693674	-83.37527	-22.88811	-35.61761	101.77217	1832.6106	486.53069	-12391.85	-1137.833	-430.5518	-418.4181	5017.4325	-62.53553	1872.0832	-16390.74	441.6748	-50.45568	698.90946	129.24566	-1394.873	8323.543
35020	3051	0.126173	-1.06049	0.8877166	-3.972752	12.687001	23.627939	-52.72457	166.24201	44.134766	-743.9743	630.76189	-13.21431	109.557	-1190.478	10.28698	104.48522	-1256.942	50.53924	-16.43881	244.39546	-37.19114	-191.57	222.232
35020	3052	-0.126171	1.0604899	-0.887717	3.9727523	-12.687	-23.628	52.724568	-166.242	-44.13477	743.97428	-630.7619	13.214315	-109.557	1190.4784	-10.28698	-104.4852	1256.9416	-50.53924	16.438808	-244.3955	37.191144	191.56999	-222.232
35020	3053	-0.014062	-0.023688	0.510614	-4.80433	-1.11115	-2.633355	-1.177698	95.622289	25.386287	-899.7032	-55.24327	-21.43759	4.3677578	216.08429	-1.178828	86.634039	-1170.339	22.875434	0.395567	23.004105	4.120913	-87.88185	624.36655
35020	3054	-0.002331	-0.144953	0.6239724	-5.348801	0.5076375	-0.436475	-7.206645	117.97445	31.32045	-1001.666	25.248246	-23.254	14.195579	50.364528	-1.167439	103.0595	-1332.211	29.776317	-2.579876	48.709689	-0.306366	-110.4087	665.39272
35020	3055	-0.019897	0.8221989	-1.270199	6.4203888	-14.26647	-3.72616	40.877408	-238.0378	-63.19548	1202.3413	-709.2867	22.469425	-9.157393	1702.5596	24.652322	-220.3325	1680.6749	-74.22284	42.841522	-130.3116	32.583733	180.56553	-715.7532
35020	3056	0.0182305	-0.794651	1.1765128	-5.635818	14.124317	3.6012773	-39.50781	220.32464	58.492896	-1055.415	702.22121	-19.07838	6.2346103	-1704.225	-24.63374	205.23049	-1483.242	69.716713	-42.44504	121.61428	-32.31298	-163.57596	620.20829

Table 2-16 PC24_Aileron_box_FBD-SC_Panel_DFEM30_LoadExtraction(Panel_Output), [206]

Panel Buckling Load Recovery Method vs Part

Box upper and lower skins	Element average (LRM020)
LE upper and lower skins	Element average (LRM020)
Box and LE Ribs	Element average (LRM020)
Front Spar	FBD+SC (LRM010)
Rear Spar	FBD+SC (LRM010)

Panel Dimensions

The FE models [2] to [6] have a good correlation between “FE” panel size and actual. Hence it is permissible to allow the FE Data module to automatically enter panel “a” & “b” dimensions.
The only exception is the leading edge (trapezoid) ribs. For these the equivalent rectangular dimensions have to be manually entered.

2.5.5.2 Joint Load Extraction using PESS Panel Edge Loads

For analysis of joints, extensive use is made of PESS panel edge loads. For panel edge loads to be generated:

- FBD+SC (LRM010) recovery method must be selected.

For example
Both files use identical a FEMAP database and PESS groups.

PESS file [201]
Recovery method: Average (LM020)

Fx	Fy	Fxy	Mx	My	Fx,Load	Fy,Load	Fxy,Load	Fxy,Load	Mx,Load	My,Load	F1x	F1y	M1z	F2x	F2y	M2z	F3x	F3y	M3z	F4x	F4y	M4z
N/mm	N/mm	N/mm	Nmm/mm	Nmm/mm	N	N	N	N	Nmm	Nmm	N	N	Nmm	N	N	Nmm	N	N	Nmm	N	N	Nmm
0.099934477	7.599884922	2.438993853	0	0	19.43268295	483.0200915	474.2727016	155.0132727	0	0												
2.329892564	12.36779294	11.57419557	0	0	446.4137479	758.1038455	2217.64733	709.459013	0	0												
6.022626852	2.191071116	12.37902227	0	0	1121.698963	438.0705449	2305.561473	2474.992706	0	0												

PESS file [205]
Recovery method: FBD+SC (LM010)

Fx	Fy	Fxy	Mx	My	Fx,Load	Fy,Load	Fxy,Load	Fxy,Load	Mx,Load	My,Load	F1x	F1y	M1z	F2x	F2y	M2z	F3x	F3y	M3z	F4x	F4y	M4z
N/mm	N/mm	N/mm	Nmm/mm	Nmm/mm	N	N	N	N	Nmm	Nmm	N	N	Nmm	N	N	Nmm	N	N	Nmm	N	N	Nmm
-0.11118118	5.054098657	1.915708143	-52.6060757	80.94594339	-21.6196514	321.2194949	372.5175754	121.7552018	-10229.4746	5144.619607	0.41	-885.42	-9737.08	-51.89	1104.16	-21896.22	76.09	-121.09	1466.10	-9.15	-110.61	-1629.44
2.484420815	11.27596316	13.61743158	-5.8746001	-23.3292568	476.0217809	691.1783754	2609.136903	834.7024645	-1125.58935	-1430.00448	-1514.59	-1329.69	3325.96	1067.70	2931.42	22118.71	355.47	52.18	467.39	123.62	-1649.51	24681.05
6.039916689	1.268330958	11.79738901	176.9377145	-165.518628	1124.919151	253.5830214	2197.233756	2358.704194	32954.20016	-33092.8718	-2541.21	-228.11	65424.62	1132.10	2079.99	42169.71	2506.06	279.11	-701.80	-1116.32	-2003.53	-23293.48

A typical example of transforming edge loads to fastener loads is shown in Figure 2-23. The example is for Rib 1a and load case 2001. The methodology is applicable to all box and leading edge ribs. Rib edge loads are used for the majority of all primary aileron joints.

- Rib to upper skin
- Rib to lower skin
- Box & LE Rib to front spar
- Rib to rear spar

For critical joints the “PESS edge load” is supplemented by detailed analysis based on loading from FEMAP free-bodies.

PESS Panel Loading with Recovery Method: FBD+SC (LRM010)

PESS file [205], worksheet: *Panel Loads*

Rib panel Id. | Load Case | Panel Loading | Data from Free-body created by PESS: Edge 1 Total Load, Edge 2 Total Load, Edge3 Total Load, Edge 4 Total Load

PANEL_ID	LC_ID	F_x N/mm	F_y N/mm	F_{xy} N/mm	M_x Nmm/mm	M_y Nmm/mm	$F_{x,Load}$ N	$F_{y,Load}$ N	$F_{xy,Load}$ N	$F_{xy,Load}$ N	$M_{x,Load}$ Nmm	$M_{y,Load}$ Nmm	$F1_x$ N	$F1_y$ N	$M1_z$ Nmm	$F2_x$ N	$F2_y$ N	$M2_z$ Nmm	$F3_x$ N	$F3_y$ N	$M3_z$ Nmm	$F4_x$ N	$F4_y$ N	$M4_z$ Nmm
35010	2001	-0.073705	-0.652349	-0.791038	5.3067914	-32.56457	-14.20534	-33.43196	-152.4594	-40.53956	1022.7958	-1668.888	57.952151	100.45445	4529.6602	-26.90528	-179.8177	-751.7827	-33.25434	1.8178676	-100.864	1.2671215	56.043243	-2830.156
35011	2001	-0.450826	-1.149349	1.5452565	-29.33639	-602.3489	-85.54274	-57.96961	293.20637	77.937958	-5566.476	-30380.62	-240.6722	76.756227	86846.803	-32.63897	-509.0143	-15920.59	237.83137	-35.40693	-65.54773	78.314474	525.81793	-4963.395
35020	2001	0.2744603	1.0803981	6.5823518	-41.60524	12.679238	51.397966	53.714347	1232.672	327.25596	-7828.836	630.37891	-215.217	-200.3012	-56.9246	38.19054	1254.3463	-11461.51	311.96703	-18.47434	694.14457	-64.82133	-1041.135	4133.6572
35021	2001	-0.009233	2.9011504	2.0458445	-41.79077	-33.30624	-1.719469	90.536479	380.78887	64.126942	-7778.431	-1043.983	-81.03171	-331.7488	1830.8238	39.262796	520.03435	-3473.747	63.194667	-105.5635	-388.7552	43.606397	-144.126	12176.506
35022	2001	0.335055	0.4339742	-4.570644	58.660744	64.830302	61.358487	13.38162	-837.0203	-140.9361	10742.52	1999.0461	136.71112	223.14051	-3447.579	69.774207	-640.7041	3150.6947	-249.9273	204.23772	787.79223	-52.74103	309.02166	-18500.23
35030	2001	0.0752956	0.9042274	-1.143792	2.0183097	59.666272	13.501364	42.847059	-205.095	-54.19889	361.90594	2827.3024	38.48348	-53.31341	-8759.423	45.084405	-38.05122	2525.2751	-92.45405	27.586152	-267.6395	18.619504	66.680953	1838.2228
35040	2001	0.1526514	0.0936445	0.6409749	-8.279574	13.706723	26.157302	4.2193926	109.83306	28.890759	-1418.731	617.53133	-8.804091	-3.178712	-1618.19	34.342921	172.63626	-2200.416	10.6681	3.5497339	58.604669	-17.82843	-172.2128	623.52085
35050	2001	0.0530655	-0.066264	1.7635137	-4.049951	-4.374895	10.423033	-2.683546	348.38662	71.417975	-795.4851	-177.1725	25.297052	-15.75339	833.79739	-4.692642	86.660765	-268.9681	124.01885	-7.312824	88.682102	-25.38604	-91.77632	1318.6421
35060	2001	0.0674112	-0.106895	1.5640336	-11.37533	-3.630636	16.360295	-4.121993	232.73199	60.311128	-2123.174	-142.3233	-25.49758	12.889345	525.789	8.4361024	356.1942	-4195.538	35.333425	0.083141	27.634374	-24.17472	-368.4049	90.632291

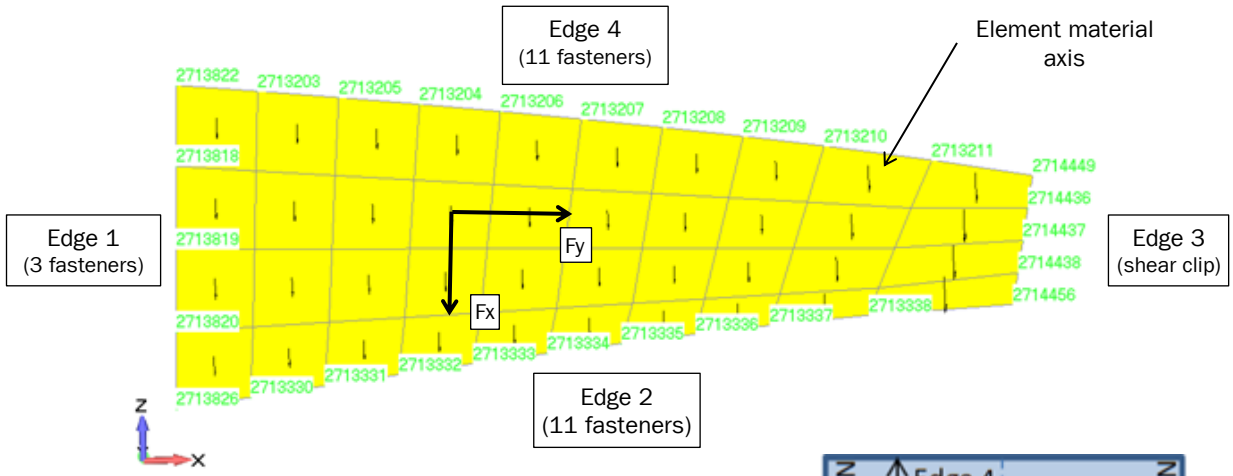

<u>Joint to Upper Skin, Edge 4</u>

(Load not aligned to edge)

Fx, /fastener = 78.3/11 = 7.1 N.

Fy, /fastener = 525.8/11 = 47.8 N.

Assume aligned shear load = $(7.1^2 + 47.8^2)^{0.5}$ = 48.3 N.

Moment loading not relevant for skin panels

<u>Joint to Front Spar, Edge 1</u>

End load: Fy = 76.8/3 = 26. N.

Shear load: Fx = 240.7/3 = 80. N.

Moment: Mz = = 86847. N. mm

/fastener = Mz/h = 86847./38.2 = 2273. N.

Rib 1a height between outer fasteners = 38.2mm

/fasteners res. $(80^2 + (26.+2273.)^2)^{0.5}$ = 2300. N.

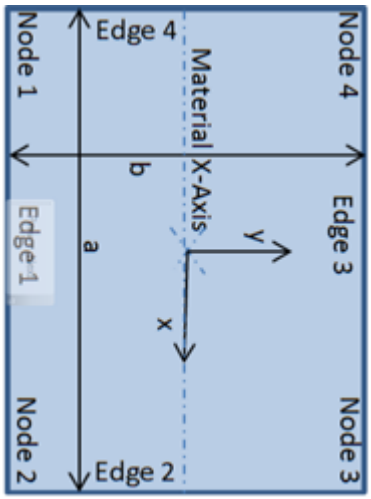

Figure 2-23 Determining joint loads from PESS load extraction files.

It should be noted that the applied moment on the rib edge 1 is not the total for the complete joint[11], only the web component.

[11] Complete joint: effective upper skin + rib web + effective lower skin.

2.5.6 Front Spar

This section documents the analysis of the aileron front spar and summarises the analysis parameters and results. The front spar consists of a number of parts; the parts which this section covers are listed in Table 2-17.
The front spar is checked for the following:

- Upper and lower cap flange strength and stability.
- Vertical panel breaker stiffeners, strength, stability and minimum inertia.
- Panel web strength under axial, shear and bending loads.
- Panel web stability under axial, shear & bending.
- Analysis of the cut-out in bay 3.
- Analysis of the splice in bay 4.

The analysis predominantly bases around PESS analysis modules. For this part of the analysis only input data and results summary tables are provided[12]. Complimenting PESS are PSM methods automated using Excel tables. Worked examples are provided to illustrate the use and construction of these tables for critical cases and locations.

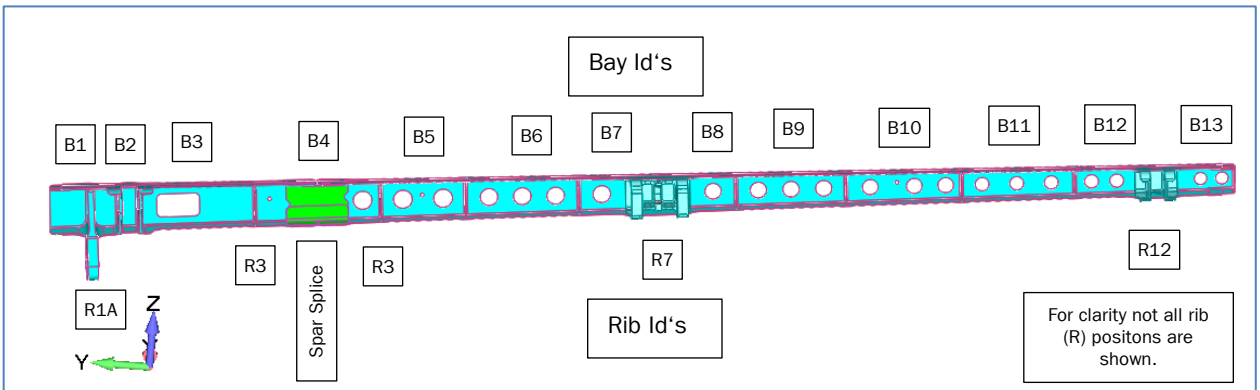

Panel Id	Bay	Rib
41010	1	1 - 1A
41020	2	1A - 2
41031	3,sub1	2 - 2a
41033	3,sub3	2b - 3
41040	4	3 - 4
41050	5	4 - 5
41060	6	5 - 6
41070	7	6 - 7
41080	8	7 - 8
41090	9	8 - 9
41100	10	9 - 10
41110	11	10 - 11
41120	12	11 - 12
41130	13	12 - 13

Figure 2-24 Front spar web bay identification.

[12] PESS analysis notes can be found in section 2.5.5

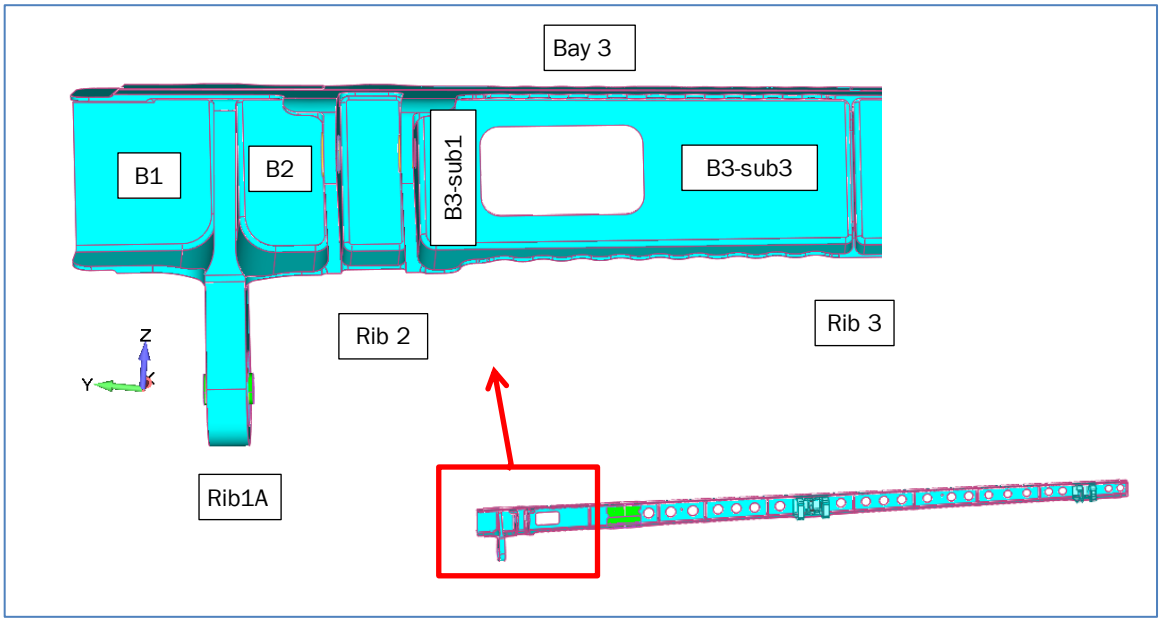

Figure 2-25 Front inboard spar sub web bay identification.

2.5.6.1 FE Models, Calculation Files, Geometry and Materials

The tables below provide an overview of analysis supporting files and data. The spar analysis uses a relatively large amount of input data. To enable simple updating and verification it has been collected in to a set of tables and is presented in Appendix E & F.

Part	Part	Calculation Files			Material
		Id	Geometry Input Data	FEM	
Front Spar (IB)	557.60.24.397/98	2, 8	Table 6-13, Table 6-16, Table 6-17 Table 6-19	2 to 6	2124 T851 plate, A basis
Front Spar (OB)	557.60.24.315/16				
Splice, aft lower	5576024391/92	8	Table 6-15	2 to 6	2024 T3 plate, B basis
Splice, aft upper	5576024389/90				
Splice, fwd lower	5576024395/96				
Splice, fwd upper	5576024393/94				

Table 2-17 Front spar overview of calculation files, geometry and materials

The front spar is a class 2 part. However to cover single load path aspects the machined parts use A basis allowables. Ref [1] requirement.

2.5.6.2 Load Case Applicability

Applicable load cases are dependent on the front spar zone under analysis.

- Set 1 All front spar zones except control arm
- Set 2 Control arm (for rod 9) see Figure 2-26

Applicable load cases for each set are listed in Table 2-18.

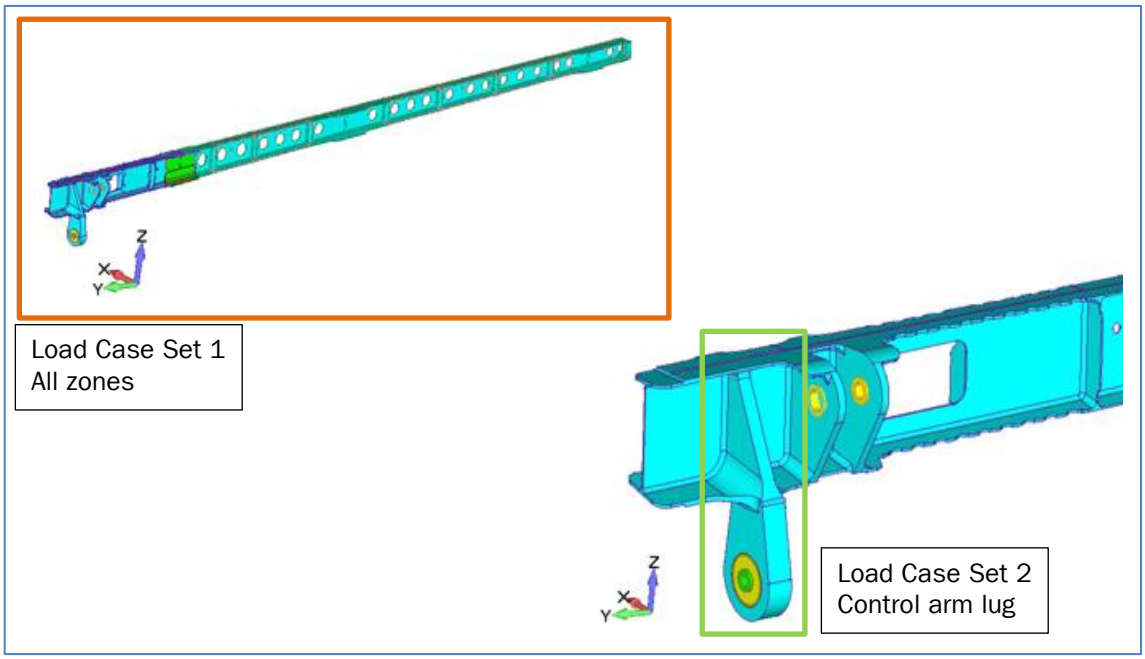

Figure 2-26 Definition of front spar load case sets.

Front Spar Load Case Applicability Table for Set 1						
Angle [°]	-25	-22	0	3	10	15
DFEM	10	20	30	40	50	60
Applicable Load Case Id's.	Aerodynamic + Wing Bending					
		2001	3002 3003	4004	5005	
	Flight Control System					
	-		-			-
	Inertia					
			3051 3052 3053 3054 3055 3056			

Control Arm Load Case Applicability Table for Set 2						
Angle [°]	-25	-22	0	3	10	15
DFEM	10	20	30	40	50	60
Applicable Load Case Id's.	Aerodynamic + Wing Bending					
		2001	3002 3003	4004	5005	
	Flight Control System					
	1081 1082		3084 3085			6086 6087
	Inertia					
			3053 3054			

Table 2-18 Applicable load cases for the front spar

The complete set of loading applicable to the complete aileron installation can be found in load registry Table 2-12.

2.5.6.3 Web Panels Load Extraction

The majority of load extraction from the FE models is performed using the PESS *FE data* module with the following options set.

Web Panels
PESS Panel data conversion = FBD + SC (LRM010)
Panels are subject to bending loads Mbx, hence LRM010 method is appropriate.

Cap Flanges
PESS Stringer data conversion = no options require to be set.

The relationship between panel and PESS load extraction orientation is shown in Figure 2-27

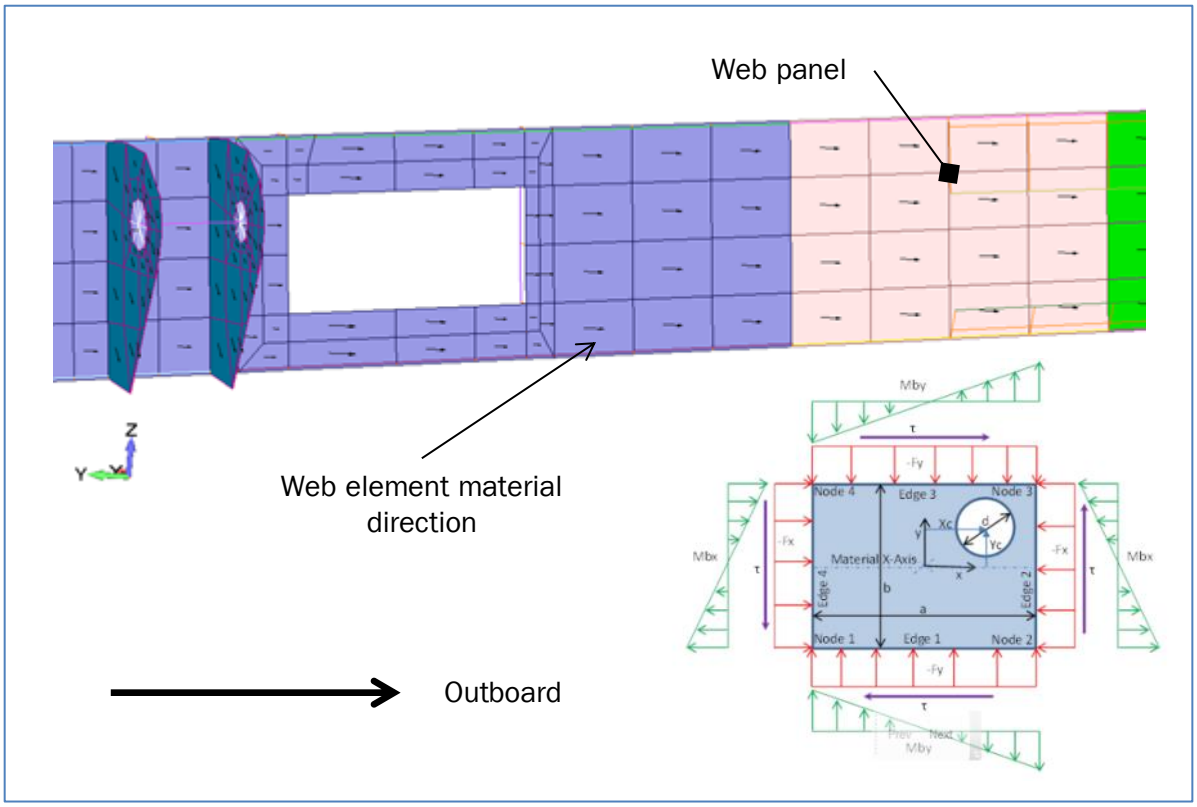

Figure 2-27 Front spar panel forces orientation.

2.5.6.4 Web Strength under Biaxial Loading

The peak panel ultimate major and minor principal FE element stress levels are compared with either Ftu or Fcy in the following tables.
RF criteria:

- Tension strength: Maximum principal stress vs Ftu allowable.
- Compression strength: Minimum principal stress vs Fcy allowable.

Bay 1 to 2

	Maximum Principal Stress							Minimum Principal Stress						
Load Case	Element Top Surface		Element Bot Surface		Allowable		RF	Element Top Surface		Element Bot Surface		Allowable		RF
	Element Id.	Value MPa	Element Id.	Value MPa	Criteria	Value MPa		Element Id.	Value MPa	Element Id.	Value MPa	Criteria	Value MPa	
2001	2714680	81.9	2714678	84.8			5.19	2714500	-104.7	2714680	-71.5			3.48
3002	2714500	157.1	2714680	172.4			2.55	2714680	-195.6	2714717	-158.7			1.86
3003	2714667	145.3	2714717	120.1			3.03	2714500	-115.4	2714669	-124.9			2.92
3054	2714701	138.6	2714663	36.3	Ftu	441.0	3.18	2714529	-38.6	2714701	-143.6	Fcy	365.0	2.54
3055	2714700	41.6	2714707	40.7			10.61	2714701	-36.6	2714700	-34.4			9.97
4004	2714500	160.5	2714669	159.6			2.74	2714667	-182.4	2714717	-157.7			2.00
5005	2714500	153.3	2714669	132.5			2.87	2714667	-154.2	2714717	-135.5			2.36

Table 2-19 Front spar webs, biaxial strength, bays 1 to 2

Critical load case	3002		
Critical ult. applied stress	Minor principal	195.6 MPa	
Allowable stress	Fcy	365.0 MPa	2124-T851, A basis
RF = allow/applied	365./195.6		**RF = 1.86**

Bay 3

	Maximum Principal Stress							Minimum Principal Stress						
Load Case	Element Top Surface		Element Bot Surface		Allowable		RF	Element Top Surface		Element Bot Surface		Allowable		RF
	Element Id.	Value MPa	Element Id.	Value MPa	Criteria	Value MPa		Element Id.	Value MPa	Element Id.	Value MPa	Criteria	Value MPa	
2001	2714537	68.9	2714537	88.4			4.98	2714568	-54.6	2714535	-53.0			6.68
3002	2714489	50.2	2714566	40.6			8.78	2714571	-59.4	2714537	-83.4			4.37
3003	2714572	100.9	2714537	130.5			3.37	2714535	-87.0	2714535	-84.4			4.19
3054	2714491	9.2	2714565	31.7	Ftu	441.0	13.92	2714565	-46.6	2714535	-17.4	Fcy	365.0	7.83
3055	2714537	156.1	2714537	148.6			2.82	2714535	-128.2	2714535	-125.9			2.84
4004	2714535	71.9	2714535	74.8			5.89	2714572	-91.7	2714537	-122.3			2.98
5005	2714535	94.3	2714535	95.9			4.59	2714572	-113.8	2714537	-141.5			2.57

Table 2-20 Front spar webs, biaxial strength, bay 3

Critical load case	3055		
Critical ult. applied stress	Major principal	156.1 MPa	
Allowable stress	Ftu	441.0 MPa	2124-T851, A basis
RF = allow/applied	441.0/156.1 = 2.82		**RF = >2.00**

Bay 4 to 7

	Maximum Principal Stress							Minimum Principal Stress						
Load Case	Element Top Surface		Element Bot Surface		Allowable		RF	Element Top Surface		Element Bot Surface		Allowable		RF
	Element Id.	Value MPa	Element Id.	Value MPa	Criteria	Value MPa		Element Id.	Value MPa	Element Id.	Value MPa	Criteria	Value MPa	
2001	2714576	10.7	2714576	10.9			40.47	2714842	-7.8	2714842	-8.8			41.49
3002	2714836	38.1	2714836	39.9			11.06	2714822	-44.4	2714822	-36.9			8.21
3003	2714822	24.0	2714829	17.0			18.35	2714842	-21.1	2714574	-26.7			13.68
3054	2714586	0.5	2714586	1.6	Ftu	441.0	270.18	2714576	-8.4	2714576	-8.2	Fcy	365.0	43.61
3055	2714836	26.0	2714836	27.8			15.88	2714822	-29.1	2714822	-25.9			12.53
4004	2714836	34.5	2714842	37.4			11.80	2714822	-40.8	2714822	-33.9			8.93
5005	2714836	44.6	2714836	44.3			9.89	2714822	-51.2	2714822	-46.6			7.12

Table 2-21 Front spar webs, biaxial strength, bay 4 to 7

Critical load case	5005		
Critical ult. applied stress	Minor principal	51.2 MPa	
Allowable stress	Fcy	365.0 MPa	2124-T851, A basis
RF = allow/applied	365.0/51.2 = 7.12		**RF = >2.00**

Bay 8 to 13

Load Case	Maximum Principal Stress							Minimum Principal Stress						
	Element Top Surface		Element Bot Surface		Allowable		RF	Element Top Surface		Element Bot Surface		Allowable		RF
	Element Id.	Value MPa	Element Id.	Value MPa	Criteria	Value MPa		Element Id.	Value MPa	Element Id.	Value MPa	Criteria	Value MPa	
2001	2714862	12.4	2714862	12.6			34.99	2714873	-10.1	2714873	-9.4			36.05
3002	2714873	46.0	2714873	44.2			9.58	2714862	-51.0	2714862	-48.3			7.15
3003	2714862	27.9	2714862	24.2			15.80	2714873	-28.4	2714873	-30.4			12.00
3054	2714963	0.3	2714851	0.3	Ftu	441.0	1332.51	2714873	-4.3	2714873	-3.9	Fcy	365.0	85.82
3055	2714873	24.9	2714873	25.3			17.42	2714862	-26.6	2714862	-24.4			13.70
4004	2714873	43.2	2714873	41.4			10.20	2714862	-48.1	2714862	-46.0			7.58
5005	2714873	54.2	2714873	51.0			8.13	2714862	-59.8	2714862	-58.9			6.10

Table 2-22 Front spar webs, biaxial strength, bays 8 to 13

Critical load case	5005		
Critical ult. applied stress	Minor principal	59.8 MPa	
Allowable stress	Fcy	365.0 MPa	2124-T851, A basis
RF = allow/applied	365.0/59.8		**RF = >2.00**

From the preceding tables the critical bays are 1 & 2; a corresponding stress contour plot is presented in Figure 2-28. The peak stress occurs at the inboard support hinge lug. These lugs are also analysed using a conventional lug analysis in section 2.5.6.11.

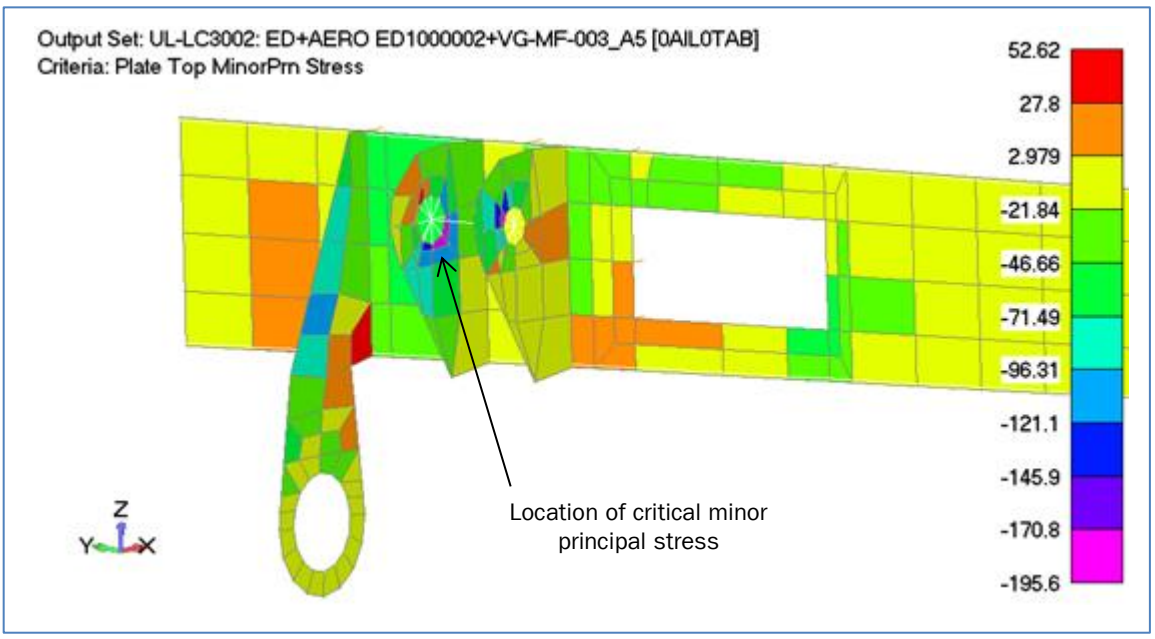

Figure 2-28 Front spar critical peak ultimate biaxial stress for bay1 & 2

2.5.6.5 Web Buckling and Lightening Hole Strength

The PESS panel analysis performs two types of checks; web buckling and strength of panel with lightening holes. The buckling RF's presented are typically interaction between shear and bending. Summary tables from the panel analysis are presented below.
Ref. calculation files [4] & [102]

- All edges are considered as simple supports.
- Buckling criteria: No buckling < Ultimate
- All buckling RF's are relative to ultimate.

Summary of PESS Panel Geometry

Bay	PANEL ID	Panel Name	Type	Mat	Edge Constraint	Basic geometry				Hole geometry					
						a	b	t	r	x	y	D	Type	H	W
	[-]	[-]	[-]	[-]	[-]	[mm]	[mm]	[mm]	[mm]	[mm]	[mm]	[mm]	[mm]	[mm]	[mm]
1	41010	Fspar_web_PANE	Flat	1	SSSS	71.88	72.58	1.45	-	-	-	-	-	-	-
2	41020	Fspar_web_PANE	Flat	1	SSSS	45.19	71.58	1.45	-	-	-	-	-	-	-
3a	41031	Fspar_web_PANE	Flat	1	SSSS	24.67	70.41	1.45	-	-	-	-	-	-	-
3c	41033	Fspar_web_PANE	Flat	1	SSSS	83.55	68.20	1.45	-	-	-	-	-	-	-
4	41040	Fspar_web_PANE	Flat-Holes	1	SSSS	199.33	65.84	1.20	-	0.00	0.00	30.00	UnFlanged	-	-
5	41050	Fspar_web_PANE	Flat-Holes	1	SSSS	134.53	63.16	1.00	-	0.00	0.00	30.00	UnFlanged	-	-
6	41060	Fspar_web_PANE	Flat-Holes	1	SSSS	177.91	60.32	1.00	-	0.00	0.00	28.00	UnFlanged	-	-
7	41070	Fspar_web_PANE	Flat-Holes	1	SSSS	124.58	57.75	1.00	-	0.00	0.00	28.00	UnFlanged	-	-
8	41080	Fspar_web_PANE	Flat-Holes	1	SSSS	124.58	55.63	1.00	-	0.00	0.00	28.00	UnFlanged	-	-
9	41090	Fspar_web_PANE	Flat-Holes	1	SSSS	174.41	53.10	1.00	-	0.00	0.00	26.00	UnFlanged	-	-
10	41100	Fspar_web_PANE	Flat-Holes	1	SSSS	182.92	50.06	1.00	-	0.00	0.00	25.00	UnFlanged	-	-
11	41110	Fspar_web_PANE	Flat-Holes	1	SSSS	179.39	46.99	1.00	-	0.00	0.00	22.00	UnFlanged	-	-
12	41120	Fspar_web_PANE	Flat-Holes	1	SSSS	129.56	44.37	1.00	-	0.00	0.00	22.00	UnFlanged	-	-
13	41130	Fspar_web_PANE	Flat-Holes	1	SSSS	126.50	42.15	1.00	-	0.00	0.00	20.00	UnFlanged	-	-

Table 2-23 Front spar web panel geometry (summary from PESS).

Summary of PESS Panel Buckling Allowables

Bay	PANEL ID	Standard allowables							Hole allowables		
		Ks	Fscr	Kc	Fccr	Kb	Fbcr	Pb	Ksh/Ks	kc	kb
	[-]	[-]	[MPa]	[-]	[MPa]	[-]	[MPa]	[MPa]	[-]	[-]	[-]
1	41010	8.37	188.47	4.05	112.19	25.90	348.96	189.36	-	-	-
2	41020	6.21	204.78	4.85	138.19	23.97	347.38	204.83	-	-	-
3,sub1	41031	5.30	220.51	8.62	253.68	33.23	357.85	220.51	-	-	-
3,sub3	41033	7.16	186.38	4.20	131.92	24.03	350.49	187.42	-	-	-
4	41040	5.25	66.76	4.02	92.73	24.25	341.10	140.74	66.76	0.28	0.26
5	41050	5.61	51.83	4.05	70.43	24.04	341.10	117.34	51.83	0.26	0.32
6	41060	5.27	54.51	4.03	76.79	24.25	341.10	120.24	54.51	0.28	0.31
7	41070	5.59	60.58	4.05	84.38	24.04	341.10	136.11	60.58	0.26	0.27
8	41080	5.54	62.29	4.09	91.73	24.13	341.10	143.84	62.29	0.27	0.25
9	41090	5.20	65.97	4.05	99.81	24.25	341.10	147.36	65.97	0.28	0.24
10	41100	5.14	71.95	4.09	113.29	24.25	341.10	159.37	71.95	0.29	0.22
11	41110	5.12	86.61	4.05	127.18	24.25	341.10	169.88	86.61	0.29	0.19
12	41120	5.28	94.72	4.03	142.15	24.25	341.10	178.78	94.72	0.28	0.17
13	41130	5.26	109.16	4.02	157.12	24.25	341.10	183.68	109.16	0.28	0.15

Table 2-24 Front spar web panel buckling allowables (summary from PESS).

Summary of PESS Panel Buckling and Lightening Hole Strength Critical RF's

Bay	PANEL ID [-]	Buckling RF LC	Buckling RF Type	Buckling RF RF	Post Buckle Required	Strength RF LC	Strength RF Type	Strength RF RF
1	41010	3002	Shear + Bending	49.65	No	-	Hole Stress N/A	N/A
2	41020	3002	Shear + Bending	4.25	No	-	Hole Stress N/A	N/A
3,sub1	41031	3055	Comp + Bending	7.78	No	-	Hole Stress N/A	N/A
3,sub3	41033	3055	Shear + Bending	11.30	No	-	Hole Stress N/A	N/A
4	41040	3002	Shear + Comp + Bending	11.70	No	3002	Hole Stress	12.71
5	41050	4004	Shear + Comp + Bending	13.74	No	4004	Hole Stress	18.06
6	41060	3056	Shear + Comp + Bending	6.22	No	3056	Hole Stress	7.30
7	41070	5005	Shear + Bending	2.91	No	3002	Hole Stress	2.87
8	41080	5005	Shear + Comp + Bending	3.29	No	5005	Hole Stress	3.02
9	41090	5005	Shear + Comp + Bending	4.04	No	5005	Hole Stress	3.55
10	41100	5005	Shear + Comp + Bending	7.96	No	5005	Hole Stress	6.28
11	41110	3002	Shear + Bending	36.29	No	3003	Hole Stress	34.57
12	41120	3002	Shear + Bending	6.17	No	3002	Hole Stress	3.59
13	41130	5005	Shear + Bending	59.30	No	5005	Hole Stress	34.38

Table 2-25 Front spar web panel critical RF's.

Web buckling

Critical load case = 5005

Critical web panel = Bay 7 PESS panel 41070

Critical RF **RF = >2.00**

(no buckling below ultimate)

Web strength

Critical load case = 5005

Critical web panel = Bay 7 PESS panel 41070

Critical RF **RF = >2.00**

2.5.6.6 Web Vertical Stiffeners

The purpose of the vertical stiffeners is to divide the spar web into “shear” panels, stabilize the cap flanges and provide a means of attaching main and leading edge rib to the spar. A typical arrangement is shown in Figure 2-29.

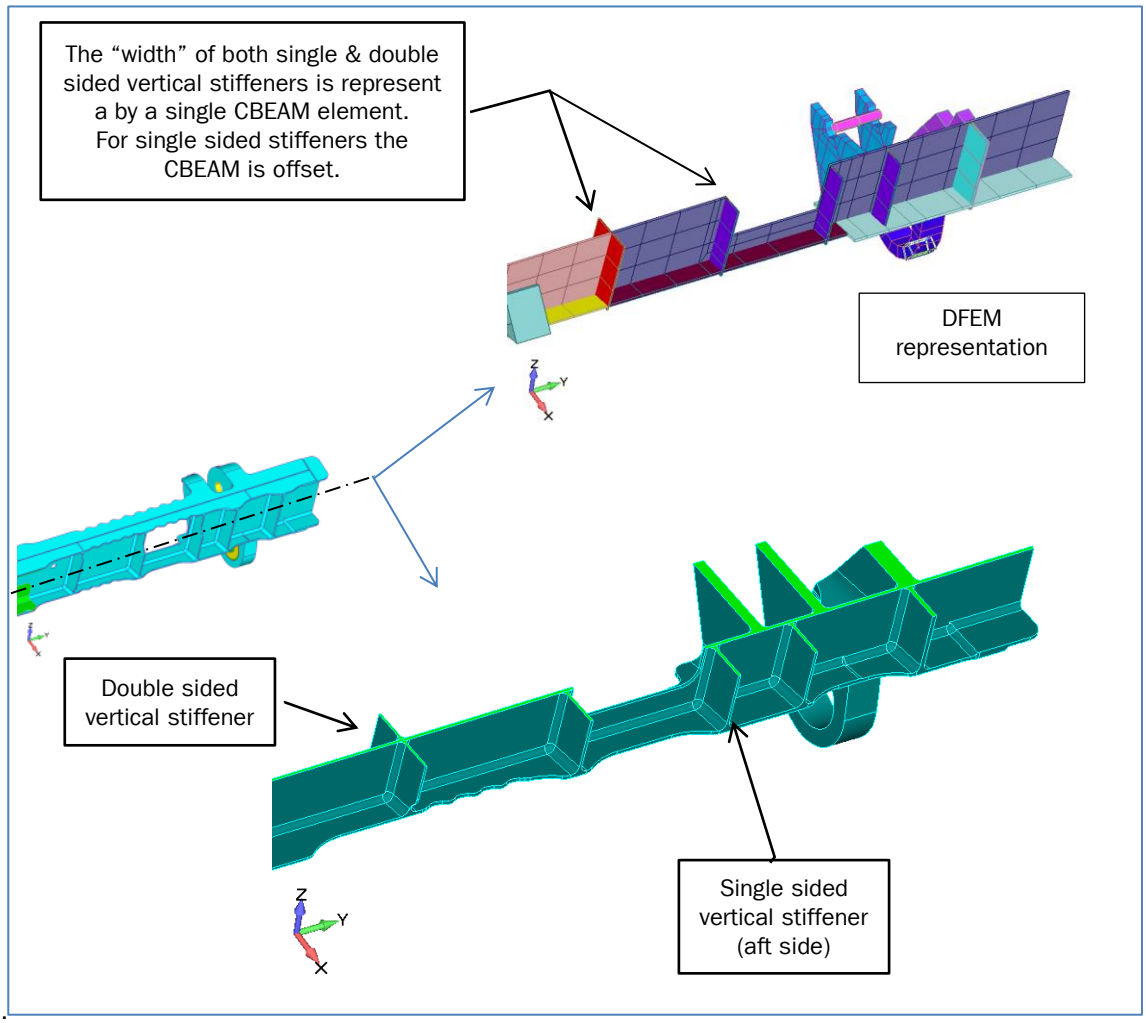

5.3.

Figure 2-29 Front spar section showing single and double sided stiffeners

Ribs to spar attachments are dealt with in the rib analysis sections. This section substantiates their ability to divide the web into bays and provide a stable support to the spar cap flanges.

2.5.6.6.1 Web Vertical Stiffeners Minimum Inertia check

Minimum stiffener inertia requirements are given in PSM 5.3.5.3 11.1. The requirement is based on the shear panel length and thickness. The spar is an integral machined part, hence E_{web}/E_{stiff} = 1.0.
The calculation in a tabular form is given in Table 2-26. Panel and stiffener Id refer to those defined for PESS analysis see section 2.5.5. The inertia required for the check is about the web centre line[13]. Typically the stiffeners are “back” to “back” hence the inertia is naturally about the web. Where this is not the case it is conservative to use the stiffener centroid rather than about the web. The check uses the minimum from the web IB & OB stiffeners. Stiffener inertia has been extracted from the PESS analysis used to determine the crippling RF.

Bay	PANEL ID	Panel Data						Inboard Stiffener			Outboard Stiffener			Criteria
		a	b	b/a	t	E_{web}/E_{stiff}	$I_{min\ required}$	Id	PESS Id	Iyy	Id	PESS Id	Iyy	
		mm			mm		mm^4			mm^4			mm^4	
1	41010	71.9	72.6	0.8	1.45	1.0	221	1	-	-	1a	44011	1333	PASS
2	41020	45.2	71.6	1.6	1.45	1.0	218	1a	44011	1333	2	44020	867	PASS
3	41031	24.7	70.4	2.9	1.45	1.0	215	2	44020	867	2a	44021	867	PASS
3	41033	83.6	68.2	0.8	1.45	1.0	208	2b	44022	867	3	44030	424	PASS
4	41040	199.3	65.8	0.3	1.20	1.0	254	3	44030	424	4	44040	431	PASS
5	41050	134.5	63.2	0.5	1.00	1.0	90	4	44040	431	5	44050	424	PASS
6	41060	177.9	60.3	0.3	1.00	1.0	130	5	44050	424	6	44060	431	PASS
7	41070	124.6	57.8	0.5	1.00	1.0	83	6	44060	431	7	44070	431	PASS
8	41080	124.6	55.6	0.4	1.00	1.0	83	7	44070	431	8	44080	431	PASS
9	41090	174.4	53.1	0.3	1.00	1.0	134	8	44080	431	9	44090	431	PASS
10	41100	182.9	50.1	0.3	1.00	1.0	148	9	44090	431	10	44100	431	PASS
11	41110	179.4	47.0	0.3	1.00	1.0	148	10	44100	431	11	44110	431	PASS
12	41120	129.6	44.4	0.3	1.00	1.0	94	11	44110	431	12	44120	431	PASS
13	41130	126.5	42.1	0.3	1.00	1.0	93	12	44120	431	13	-	-	PASS

Table 2-26 Front spar webs minimum panel breaker inertia.

All spar vertical stiffeners pass the minimum inertia requirements.

[13] PSM 5.3.5.3 page 5.3.5.3-40

2.5.6.6.2 Web Vertical Stiffeners Crippling Check

For analysis purpose the vertical stiffeners have been treated as a “PESS STRINGER”. Summary tables from the PESS stringer analysis are presented below.
Ref. calculation files [3] & [103]

Summary of PESS Stiffener Geometry

Rib	STRINGER ID [-]	STRINGER Name [-]	Type [-]	Mat [-]	Cross-section properties Area [mm2]	Iyy [mm4]	Izz [mm4]	Spar web Mat [-]	t [mm]	Fastener Type [-]	Pitch [mm]	Diameter [mm]
1	44011	ST_STRINGER_44011	Integral Blade	1	40.00	1333.33	13.33	1	1.00	a	19.20	3.20
2	44020	ST_STRINGER_44020	Integral Blade	1	26.00	866.67	3.66	1	1.00	a	19.20	3.20
3	44021	ST_STRINGER_44021	Integral Blade	1	26.00	866.67	3.66	1	1.00	a	19.20	3.20
3	44022	ST_STRINGER_44022	Integral Blade	1	26.00	866.67	3.66	1	1.00	a	19.20	3.20
4	44030	ST_STRINGER_44030	Integral Blade	1	17.20	424.04	1.43	1	1.00	a	19.20	3.20
5	44040	ST_STRINGER_44040	Integral Blade	1	17.30	431.48	1.44	1	1.00	a	19.20	3.20
6	44050	ST_STRINGER_44050	Integral Blade	1	17.20	424.04	1.43	1	1.00	a	19.20	3.20
7	44060	ST_STRINGER_44060	Integral Blade	1	17.30	431.48	1.44	1	1.00	a	19.20	3.20
8	44070	ST_STRINGER_44070	Integral Blade	1	17.30	431.48	1.44	1	1.00	a	19.20	3.20
9	44080	ST_STRINGER_44080	Integral Blade	1	17.30	431.48	1.44	1	1.00	a	19.20	3.20
10	44090	ST_STRINGER_44090	Integral Blade	1	17.30	431.48	1.44	1	1.00	a	19.20	3.20
11	44100	ST_STRINGER_44100	Integral Blade	1	17.30	431.48	1.44	1	1.00	a	19.20	3.20
12	44110	ST_STRINGER_44110	Integral Blade	1	17.30	431.48	1.44	1	1.00	a	19.20	3.20
13	44120	ST_STRINGER_44120	Integral Blade	1	17.30	431.48	1.44	1	1.00	a	19.20	3.20

Table 2-27 Front spar vertical stiffener geometry (summary from PESS).

Summary of PESS Stiffener Crippling Allowables

Rib	STRINGER ID [-]	Local buckling stress BE1 [MPa]	BE2 [MPa]	BE3 [MPa]	BE4 [MPa]	BE5 [MPa]	BE6 [MPa]	BE7 [MPa]	Fcc [MPa]	IRB E1 [MPa]	E2 [MPa]
1	44011	358.40	-	-	-	-	-	-	266.63	-	-
2	44020	187.68	-	-	-	-	-	-	175.21	-	-
3	44021	187.68	-	-	-	-	-	-	175.21	-	-
3	44022	187.68	-	-	-	-	-	-	175.21	-	-
4	44030	150.15	-	-	-	-	-	-	161.15	-	-
5	44040	148.42	-	-	-	-	-	-	160.45	-	-
6	44050	150.15	-	-	-	-	-	-	161.15	-	-
7	44060	148.42	-	-	-	-	-	-	160.45	-	-
8	44070	148.42	-	-	-	-	-	-	160.45	-	-
9	44080	148.42	-	-	-	-	-	-	160.45	-	-
10	44090	148.42	-	-	-	-	-	-	160.45	-	-
11	44100	148.42	-	-	-	-	-	-	160.45	-	-
12	44110	148.42	-	-	-	-	-	-	160.45	-	-
13	44120	148.42	-	-	-	-	-	-	160.45	-	-

Table 2-28 Front spar vertical stiffeners buckling allowables (summary from PESS).

Buckling codes:	BE1 to BE7:	Flange local buckling
	Fcc:	Flange crippling
	IRB:	Inter-rivet buckling of attached skin

Summary of PESS Vertical Stiffener Critical RF's

Rib	Stiff ID	Crippling Reserve Factor vs Load Case Id										
	[-]	2001	3002	3003	3053	3054	3053	3054	3054	3055	4004	5005
1a	44011	>2.00	>2.00	>2.00	>2.00	>2.00	>2.00	>2.00	>2.00	>2.00	>2.00	>2.00
2	44020	>2.00	>2.00	>2.00	>2.00	>2.00	>2.00	>2.00	>2.00	>2.00	>2.00	>2.00
2a	44021	>2.00	>2.00	>2.00	>2.00	>2.00	>2.00	>2.00	>2.00	>2.00	>2.00	>2.00
2b	44022	>2.00	>2.00	>2.00	>2.00	>2.00	>2.00	>2.00	>2.00	>2.00	>2.00	>2.00
3	44030	>2.00	>2.00	>2.00	>2.00	>2.00	>2.00	>2.00	>2.00	>2.00	>2.00	>2.00
4	44040	>2.00	>2.00	>2.00	>2.00	>2.00	>2.00	>2.00	>2.00	>2.00	>2.00	>2.00
5	44050	>2.00	>2.00	>2.00	>2.00	>2.00	>2.00	>2.00	>2.00	>2.00	>2.00	>2.00
6	44060	>2.00	>2.00	>2.00	>2.00	>2.00	>2.00	>2.00	>2.00	>2.00	>2.00	>2.00
7	44070	>2.00	>2.00	>2.00	>2.00	>2.00	>2.00	>2.00	>2.00	>2.00	>2.00	>2.00
8	44080	>2.00	>2.00	>2.00	>2.00	>2.00	>2.00	>2.00	>2.00	>2.00	>2.00	>2.00
9	44090	>2.00	>2.00	>2.00	>2.00	>2.00	>2.00	>2.00	>2.00	>2.00	>2.00	>2.00
10	44100	>2.00	>2.00	>2.00	>2.00	>2.00	>2.00	>2.00	>2.00	>2.00	>2.00	>2.00
11	44110	>2.00	>2.00	>2.00	>2.00	>2.00	>2.00	>2.00	>2.00	>2.00	>2.00	>2.00
12	44120	>2.00	>2.00	>2.00	>2.00	>2.00	>2.00	>2.00	>2.00	>2.00	>2.00	>2.00

Table 2-29 Front spar summary of crippling RF's, all stiffener and load case combinations.

Critical Load Case 5005
Critical Rib 2a PESS Id 44021
Critical crippling ultimate RF = 8.11 **RF = >2.00**

2.5.6.7 Upper Spar Cap

For analysis purpose the spar caps have been treated as a “PESS STRINGER”. Summary tables from the PESS stringer analysis are presented below.
Ref. calculation files [3] & [103]

<u>Summary of Upper Cap PESS Stiffener Geometry</u>
Manual input of spar cap dimension is required. PESS presents a “form” to be completed for each bay. A typical “form” is shown in Figure 2-30. Data which is input to these forms is given in Table 6-13, under the sub-heading *Front Spar, upper flange*.

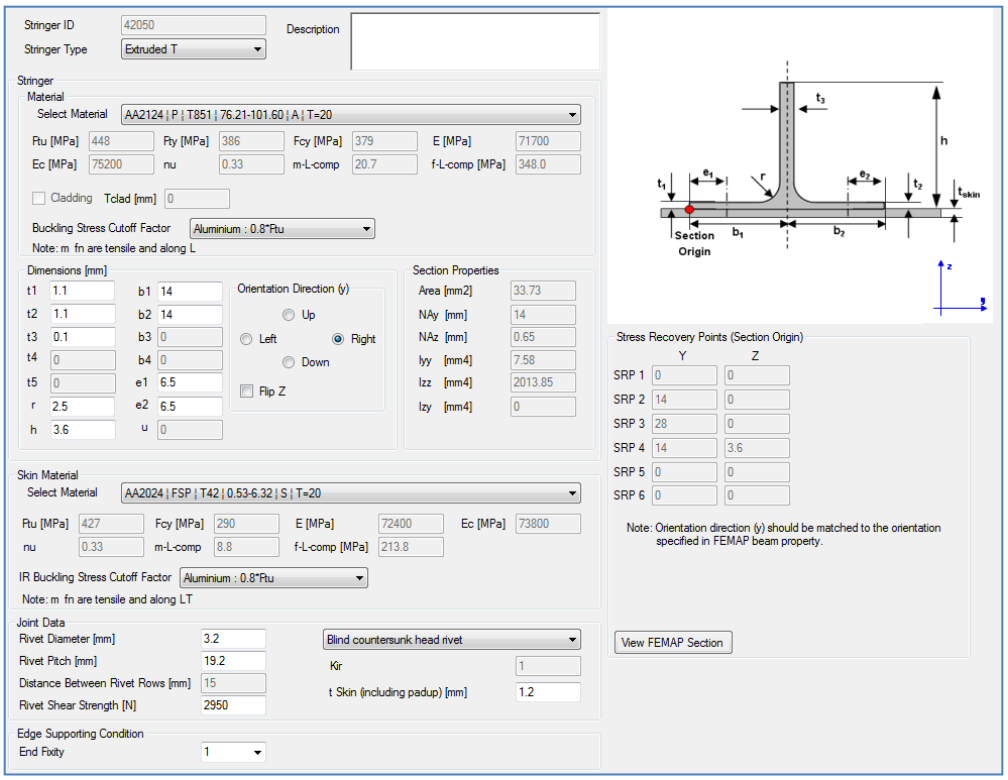

Figure 2-30 Front spar caps, typical PESS property input (values for upper cap bay 5)

Rib	STRINGER ID [-]	STRINGER Name [-]	Type [-]	Mat [-]	Cross-section properties Area [mm2]	Iyy [mm4]	Izz [mm4]	Skin Mat [-]	t [mm]	Fastener Type [-]	Pitch [mm]	Diameter [mm]
1 - 1A	42010	F_UC_STRINGER_42010	Extruded T	1	60.73	20.78	5569.65	2	1.20	a	22.40	3.20
1A - 2	42020	F_UC_STRINGER_42020	Extruded T	1	60.73	20.78	5569.65	2	1.20	a	19.20	3.20
2 - 3	42031	F_UC_STRINGER_42031	Extruded T	1	60.74	20.84	5569.65	2	1.20	a	25.40	3.20
2 - 3	42032	F_UC_STRINGER_42032	Extruded T	1	50.54	18.32	3111.45	2	1.20	a	25.40	3.20
2 - 3	42033	F_UC_STRINGER_42033	Extruded T	1	60.74	20.84	5569.65	2	1.20	a	25.40	3.20
3 - 4	42041	F_UC_STRINGER_42041	Extruded T	1	36.53	8.86	2196.78	2	1.20	a	19.20	3.20
3 - 4	42042	F_UC_STRINGER_42042	Extruded T	1	36.53	8.86	2196.78	2	1.20	a	19.20	3.20
4 -5	42050	F_UC_STRINGER_42050	Extruded T	1	33.73	7.58	2013.85	2	1.20	a	19.20	3.20
5 - 6	42060	F_UC_STRINGER_42060	Extruded T	1	30.93	6.48	1830.92	2	1.20	a	19.20	3.20
6 - 7	42070	F_UC_STRINGER_42070	Extruded T	1	30.93	6.48	1830.92	2	1.20	a	19.20	3.20
7 - 8	42080	F_UC_STRINGER_42080	Extruded T	1	36.53	8.86	2196.78	2	1.20	a	19.20	3.20
8 - 9	42090	F_UC_STRINGER_42090	Extruded T	1	30.93	6.48	1830.92	2	1.20	a	19.20	3.20
9 - 10	42100	F_UC_STRINGER_42100	Extruded T	1	30.95	6.66	1830.92	2	1.20	a	19.20	3.20
10 - 11	42110	F_UC_STRINGER_42110	Extruded T	1	30.93	6.48	1830.92	2	1.20	a	19.20	3.20
11 - 12	42120	F_UC_STRINGER_42120	Extruded T	1	30.93	6.48	1830.92	2	1.20	a	19.20	3.20
12 - 13	42130	F_UC_STRINGER_42130	Extruded T	1	30.93	6.48	1830.92	2	1.20	a	19.20	3.20

Table 2-30 Front spar upper cap geometry (summary from PESS).

Summary of Upper Cap PESS Stiffener Buckling & Crippling Allowables

Rib	STRINGER ID [-]	Local buckling stress BE1 [MPa]	BE2 [MPa]	BE3 [MPa]	BE4 [MPa]	BE5 [MPa]	BE6 [MPa]	BE7 [MPa]	Fcc [MPa]	IRB E1 [MPa]	E2 [MPa]
1 - 1A	42010	358.40	358.40	358.40	358.40	69.95	-	-	266.78	175.03	175.03
1A - 2	42020	358.40	358.40	358.40	358.40	69.95	-	-	266.78	194.65	194.65
2 - 3	42031	358.40	358.40	358.40	358.40	67.25	-	-	266.76	153.28	153.28
2 - 3	42032	358.40	358.40	358.40	358.40	67.25	-	-	302.21	153.28	153.28
2 - 3	42033	358.40	358.40	358.40	358.40	67.25	-	-	266.76	153.28	153.28
3 - 4	42041	358.40	358.40	358.40	358.40	71.07	-	-	228.56	194.65	194.65
3 - 4	42042	358.40	358.40	358.40	358.40	71.07	-	-	228.56	194.65	194.65
4 -5	42050	358.40	358.40	358.40	358.40	71.07	-	-	209.53	194.65	194.65
5 - 6	42060	358.40	358.40	358.40	358.40	71.07	-	-	190.52	194.65	194.65
6 - 7	42070	358.40	358.40	358.40	358.40	71.07	-	-	190.52	194.65	194.65
7 - 8	42080	358.40	358.40	358.40	358.40	71.07	-	-	228.56	194.65	194.65
8 - 9	42090	358.40	358.40	358.40	358.40	71.07	-	-	190.52	194.65	194.65
9 - 10	42100	358.40	358.40	358.40	358.40	60.93	-	-	190.40	194.65	194.65
10 - 11	42110	358.40	358.40	358.40	358.40	71.07	-	-	190.52	194.65	194.65
11 - 12	42120	358.40	358.40	358.40	358.40	71.07	-	-	190.52	194.65	194.65
12 - 13	42130	358.40	358.40	358.40	358.40	71.07	-	-	190.52	194.65	194.65

Table 2-31 Front spar upper cap instability allowables (summary from PESS).

Buckling codes:	BE1 to BE7:	Flange local buckling
	Fcc:	Flange crippling
	IRB:	Inter-rivet buckling of attached skin

Summary of Upper Cap PESS Stiffener Applied Crippling Stress

Rib	STRINGER ID [-]	Front Spar Upper Flange Crippling Stress vs Load Case [MPa] 2001	3002	3003	3051	3052	3053	3054	3055	3056	4004	5005
1 - 1A	42010	19.3	20.0	21.2	1.9	1.2	1.0	1.1	0.5	0.2	19.5	16.6
1A - 2	42020	40.5	47.8	46.5	4.3	5.8	2.0	2.3	5.7	2.7	45.5	36.8
2 - 3	42031	0.0	22.2	0.0	3.1	5.6	1.6	1.1	10.0	1.2	17.9	11.1
2 - 3	42032	4.1	20.7	15.7	1.3	5.2	0.0	0.0	37.0	39.5	29.0	32.4
2 - 3	42033	0.0	19.4	1.6	0.0	2.9	0.0	0.0	0.0	38.2	29.2	32.4
3 - 4	42041	0.0	14.8	3.7	0.0	4.5	0.0	0.0	0.0	22.4	17.0	17.3
3 - 4	42042	0.0	0.0	2.1	0.0	3.9	0.0	0.0	0.0	17.3	0.0	0.4
4 -5	42050	0.0	0.0	1.8	0.0	4.6	0.0	0.0	0.0	17.6	0.0	3.4
5 - 6	42060	0.0	8.2	0.2	0.0	6.8	0.0	0.0	1.5	13.6	8.6	14.4
6 - 7	42070	0.1	71.4	0.0	0.0	28.7	0.0	0.0	40.0	3.5	67.9	80.9
7 - 8	42080	0.0	51.1	0.0	0.0	24.1	0.0	0.0	34.1	0.0	49.0	67.1
8 - 9	42090	1.2	12.6	0.0	0.0	6.9	0.0	0.0	8.4	2.0	12.6	19.1
9 - 10	42100	3.3	0.0	2.4	0.0	5.4	0.0	0.0	0.0	6.7	0.0	2.0
10 - 11	42110	3.9	0.0	3.0	0.0	4.8	0.0	0.1	0.0	8.6	0.0	0.0
11 - 12	42120	4.1	9.1	2.1	2.1	4.6	0.0	0.2	2.6	8.1	7.1	8.7
12 - 13	42130	0.7	16.5	0.7	2.6	5.0	0.0	0.2	5.5	0.2	13.3	15.8

Table 2-32 Front spar upper cap applied crippling stress (summary from PESS).

Summary of Upper Cap PESS Buckling & Strength Critical RF's

Rib	STRINGER ID	Buckling RF			Post Buckle	Strength RF		
	[-]	LC	Type	RF	Required	LC	Type	RF
1 - 1A	42010	3003	TE_WEB_Mid	5.26	No	3002	STRENGTH_Mid	15.11
1A - 2	42020	3003	TE_WEB_Mid	1.50	No	3002	STRENGTH_Mid	6.81
2 - 3	42031	3002	TE_WEB_Mid	3.03	No	2001	STRENGTH_Mid	25.69
2 - 3	42032	3056	TE_WEB_Mid	1.70	No	3055	STRENGTH_Mid	11.71
2 - 3	42033	3056	TE_WEB_Mid	1.76	No	3055	STRENGTH_Mid	12.02
3 - 4	42041	3056	TE_WEB_Mid	4.06	No	3055	STRENGTH_Mid	20.98
3 - 4	42042	3056	TE_WEB_Mid	4.10	No	3055	STRENGTH_Mid	27.14
4 -5	42050	3056	TE_WEB_Mid	4.03	No	3055	STRENGTH_Mid	26.42
5 - 6	42060	3056	TE_WEB_Mid	5.22	No	3055	STRENGTH_Mid	34.24
6 - 7	42070	5005	TE_WEB_Mid	1.29	No	3003	STRENGTH_Mid	11.53
7 - 8	42080	5005	TE_WEB_Mid	1.13	No	3056	STRENGTH_Mid	13.66
8 - 9	42090	5005	TE_WEB_Mid	4.11	No	3003	STRENGTH_Mid	35.76
9 - 10	42100	3056	TE_WEB_Mid	9.10	No	3002	STRENGTH_Mid	22.15
10 - 11	42110	3056	TE_WEB_Mid	8.89	No	3002	STRENGTH_Mid	22.33
11 - 12	42120	3002	TE_WEB_Mid	8.14	No	3002	STRENGTH_Mid	26.19
12 - 13	42130	3002	TE_WEB_Mid	6.37	No	3056	STRENGTH_Mid	84.34

Table 2-33 Front spar upper cap critical RF's.

Upper Cap Instability

Critical load case: 5005

Critical "Stringer": 42080 Upper cap between rib 7 & 8

Critical RF **RF = >2.00**

No buckling below ultimate

Upper Cap Strength

Critical load case: 3002

Critical web panel: 42020 Upper cap between rib 1a & 2

Critical RF **RF = >2.00**

2.5.6.8 Lower Spar Cap

Lower caps are treated in a similar manner to the upper.
Data which is input to PESS stringer properties forms is given in Table 6-13, under the sub-heading *Front Spar, lower flange*.
Ref. calculation files [3] & [103]

Summary of Lower Cap PESS Stiffener Geometry

Rib	STRINGER ID [-]	TRINGER Nam [-]	Type [-]	Mat [-]	Cross-section properties Area [mm2]	Iyy [mm4]	Izz [mm4]	Skin Mat [-]	t [mm]	Fastener Type [-]	Pitch [mm]	Diameter [mm]
1 - 1A	43010	Fspar_LC_STRING	Extruded T	1	72.93	24.93	9334.92	2	1.20	a	22.40	3.20
1A - 2	43020	Fspar_LC_STRING	Extruded T	1	70.93	23.28	9068.25	2	1.20	a	18.50	3.20
2 - 3	43031	Fspar_LC_STRING	Extruded T	1	72.93	24.98	9334.92	2	1.20	a	22.40	3.20
2 - 3	43032	Fspar_LC_STRING	Extruded T	1	51.93	19.52	3202.92	2	1.20	a	19.20	3.20
2 - 3	43033	Fspar_LC_STRING	Extruded T	1	51.93	19.52	3202.92	2	1.20	a	19.20	3.20
3 - 4	43041	Fspar_LC_STRING	Extruded T	1	36.53	8.86	2196.78	2	1.20	a	19.20	3.20
3 - 4	43042	Fspar_LC_STRING	Extruded T	1	36.53	8.86	2196.78	2	1.20	a	19.20	3.20
4 -5	43050	Fspar_LC_STRING	Extruded T	1	33.73	7.58	2013.85	2	1.20	a	19.20	3.20
5 - 6	43060	Fspar_LC_STRING	Extruded T	1	30.93	6.48	1830.92	2	1.20	a	19.20	3.20
6 - 7	43070	Fspar_LC_STRING	Extruded T	1	36.53	8.86	2196.78	2	1.20	a	19.20	3.20
7 - 8	43080	Fspar_LC_STRING	Extruded T	1	30.93	6.48	1830.92	2	1.20	a	19.20	3.20
8 - 9	43090	Fspar_LC_STRING	Extruded T	1	30.93	6.48	1830.92	2	1.20	a	19.20	3.20
9 - 10	43100	Fspar_LC_STRING	Extruded T	1	30.93	6.48	1830.92	2	1.20	a	19.20	3.20
10 - 11	43110	Fspar_LC_STRING	Extruded T	1	30.93	6.48	1830.92	2	1.20	a	19.20	3.20
11 - 12	43120	Fspar_LC_STRING	Extruded T	1	30.93	6.48	1830.92	2	1.20	a	19.20	3.20
12 - 13	43130	Fspar_LC_STRING	Extruded T	1	30.93	6.48	1830.92	2	1.20	a	19.20	3.20

Table 2-34 Front spar lower cap geometry (summary from PESS).

Summary of Lower Cap PESS Stiffener Buckling & Crippling Allowables

Rib	STRINGER ID [-]	Local buckling stress BE1 [MPa]	BE2 [MPa]	BE3 [MPa]	BE4 [MPa]	BE5 [MPa]	BE6 [MPa]	BE7 [MPa]	Fcc [MPa]	IRB E1 [MPa]	E2 [MPa]
1 - 1A	43010	358.40	358.40	358.40	358.40	72.81	-	-	233.50	175.03	175.03
1A - 2	43020	358.40	358.40	358.40	358.40	69.95	-	-	226.81	198.63	198.63
2 - 3	43031	358.40	358.40	358.40	358.40	69.95	-	-	233.48	175.03	175.03
2 - 3	43032	358.40	358.40	358.40	358.40	69.95	-	-	302.26	194.65	194.65
2 - 3	43033	358.40	358.40	358.40	358.40	69.95	-	-	302.26	194.65	194.65
3 - 4	43041	358.40	358.40	358.40	358.40	71.07	-	-	228.56	194.65	194.65
3 - 4	43042	358.40	358.40	358.40	358.40	71.07	-	-	228.56	194.65	194.65
4 -5	43050	358.40	358.40	358.40	358.40	71.07	-	-	209.53	194.65	194.65
5 - 6	43060	358.40	358.40	358.40	358.40	71.07	-	-	190.52	194.65	194.65
6 - 7	43070	358.40	358.40	358.40	358.40	71.07	-	-	228.56	194.65	194.65
7 - 8	43080	358.40	358.40	358.40	358.40	71.07	-	-	190.52	194.65	194.65
8 - 9	43090	358.40	358.40	358.40	358.40	71.07	-	-	190.52	194.65	194.65
9 - 10	43100	358.40	358.40	358.40	358.40	71.07	-	-	190.52	194.65	194.65
10 - 11	43110	358.40	358.40	358.40	358.40	71.07	-	-	190.52	194.65	194.65
11 - 12	43120	358.40	358.40	358.40	358.40	71.07	-	-	190.52	194.65	194.65
12 - 13	43130	358.40	358.40	358.40	358.40	71.07	-	-	190.52	194.65	194.65

Table 2-35 Front spar lower cap instability allowables (summary from PESS).

Buckling codes:	BE1 to BE7:	Flange local buckling
	Fcc:	Flange crippling
	IRB:	Inter-rivet buckling of attached skin

Summary of Lower Cap PESS Stiffener Applied Crippling Stress

Rib	STRINGER ID	Front Spar Lower Flange Crippling Stress vs Load Case [MPa]										
	[-]	2001	3002	3003	3051	3052	3053	3054	3055	3056	4004	5005
1 - 1A	43010	38.1	97.7	66.6	2.6	2.1	1.6	1.3	0.9	0.4	97.4	81.3
1A - 2	43020	63.3	137.1	81.1	4.7	3.8	8.0	7.8	6.9	11.1	136.1	116.2
2 - 3	43031	18.7	0.8	18.7	4.8	3.9	3.4	3.4	7.9	10.4	1.4	1.5
2 - 3	43032	24.1	36.3	26.6	7.1	6.6	0.0	0.0	23.7	20.7	32.7	30.5
2 - 3	43033	25.9	42.3	29.9	2.1	7.5	0.0	0.0	24.4	16.5	38.7	36.1
3 - 4	43041	13.1	15.9	11.9	0.0	4.0	0.0	0.0	21.7	0.0	13.6	12.1
3 - 4	43042	4.8	13.3	3.0	0.0	3.6	0.0	0.0	16.1	0.0	10.1	6.9
4 -5	43050	4.5	12.7	5.1	0.0	4.0	0.0	0.0	15.9	0.0	9.4	5.5
5 - 6	43060	3.7	10.3	10.8	0.0	7.2	0.0	0.0	13.6	1.9	7.0	1.3
6 - 7	43070	21.0	8.9	39.3	6.1	21.7	0.3	0.8	6.6	33.9	8.3	5.0
7 - 8	43080	23.5	0.0	51.0	5.5	24.2	0.7	1.1	0.4	41.2	0.0	0.0
8 - 9	43090	2.7	7.2	13.6	0.0	7.6	0.0	0.0	2.7	10.0	5.3	1.3
9 - 10	43100	0.0	19.9	6.4	0.0	5.5	0.0	0.0	6.9	0.0	16.1	12.7
10 - 11	43110	0.0	21.1	3.0	0.0	4.6	0.0	0.0	10.0	0.0	17.5	16.3
11 - 12	43120	1.6	18.4	2.1	2.5	4.6	0.0	0.1	9.8	2.7	16.0	15.4
12 - 13	43130	2.7	1.0	3.8	2.6	5.7	0.0	0.2	0.2	6.0	0.3	0.5

Table 2-36 Front spar lower cap applied crippling stress (summary from PESS).

Summary of Lower Cap PESS Buckling & Strength Critical RF's

Rib	STRINGER ID	Buckling RF			Post Buckle	Strength RF		
	[-]	LC	Type	RF	Required	LC	Type	RF
1 - 1A	43010	3002	TE_IRB_AF2_Mid	1.79	No	3002	STRENGTH_Mid	4.92
1A - 2	43020	3002	TE_IRB_AF2_Mid	1.45	No	4004	STRENGTH_Mid	3.97
2 - 3	43031	2001	TE_WEB_Mid	4.27	No	3002	STRENGTH_Mid	17.13
2 - 3	43032	2001	TE_WEB_Mid	3.08	No	3002	STRENGTH_Mid	13.73
2 - 3	43033	5005	TE_WEB_Mid	2.69	No	5005	STRENGTH_Mid	13.42
3 - 4	43041	3055	TE_WEB_Mid	4.33	No	3056	STRENGTH_Mid	21.17
3 - 4	43042	3055	TE_WEB_Mid	4.52	No	3056	STRENGTH_Mid	28.80
4 -5	43050	3055	TE_WEB_Mid	4.63	No	3056	STRENGTH_Mid	28.89
5 - 6	43060	3055	TE_WEB_Mid	5.54	No	3056	STRENGTH_Mid	33.63
6 - 7	43070	3056	TE_WEB_Mid	2.69	No	5005	STRENGTH_Mid	5.92
7 - 8	43080	3003	TE_WEB_Mid	2.23	No	5005	STRENGTH_Mid	5.24
8 - 9	43090	3003	TE_WEB_Mid	5.38	No	5005	STRENGTH_Mid	25.16
9 - 10	43100	3002	TE_WEB_Mid	4.34	No	3056	STRENGTH_Mid	66.37
10 - 11	43110	3002	TE_WEB_Mid	4.01	No	3056	STRENGTH_Mid	45.54
11 - 12	43120	3002	TE_WEB_Mid	4.51	No	3056	STRENGTH_Mid	46.44
12 - 13	43130	3056	TE_WEB_Mid	22.13	No	3002	STRENGTH_Mid	26.68

Table 2-37 Front spar lower cap critical RF.

Lower Cap Instability

Critical load case = 3002

Critical flange Lower cap between rib 1a & 2 PESS "stringer" Id. 43020

Critical RF **RF = 1.45**

No buckling below ultimate

Lower Cap Strength

Critical load case = 4004

Critical flange l Lower cap between rib 1a & 2 PESS "stringer" Id. 43020

Critical RF **RF = >2.00**

2.5.6.9 Web Cut-out at Bay 3

A cut-out is introduced into the spar web at bay three. This is to allow trim tab control rods to pass through the aileron box. See Figure 2-31.

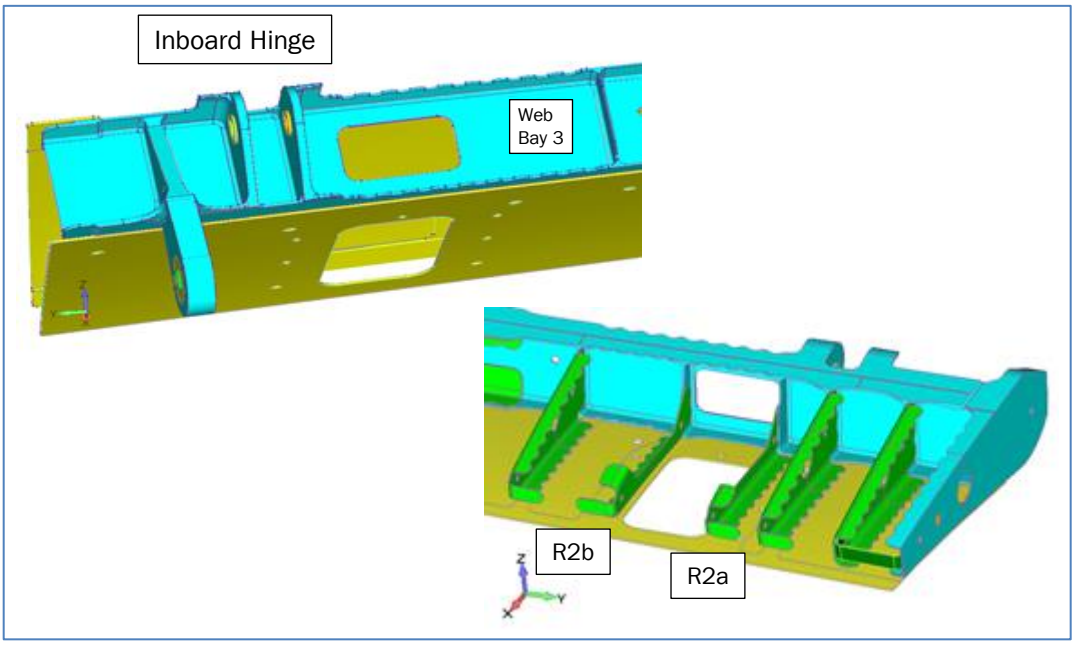

Figure 2-31 Location and arrangement of the front spar cut-out at bay 3

Strength checks for the cut-out follow the method given in PSM 5.3.5.7

- Strength of "Secondary Beam"

Table 2-38 gives geometric data pertinent to the strength checks of the web. Nomenclature used follows that used in PSM 5.3.5.7

Cut Out Geometry (nomenclature as PSM5.3.5.7)		Hash Cut-out_		
Bay:			Units	Comments
a =	75.0		mm	Width of bay
b =	70.8		mm	Height of bay web
tw =	1.4		mm	Web thickness
Hole:			Units	Comments
r =	8.0		mm	Assumed rectangular section
Ls =	68.2		mm	Slot length(excluding R)
b_hole =	38.1		mm	Slot height
Cap and Web:			Units	Comments
Wu =	35.7		mm	Upper spar cap width
t1u =	1.6		mm	Thickness of upper web
tuskin =	1.3		mm	Thickness of upper skin land
Wl =	35.8		mm	Lower spar cap width
t1l =	1.6		mm	Thickness of lower web
tlskin =	1.6		mm	Thickness of lower skin land

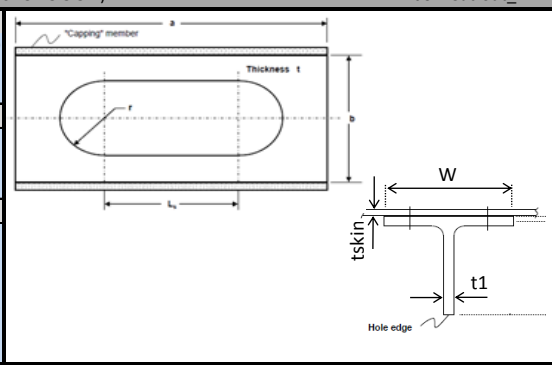

Table 2-38 Geometric data for front spar web bay 3 cut-out.

Load Extraction

Loading for strength checks is extracted from the relevant FEM's via FEMAP defined Free-bodies. An interface point and coordinate system (C2710101) at mid slot height/width is used for the load summation. The local coordinate system is defined in the aileron "master" FEMAP FEM file [1]. It is linked to the hinge coordinate C2710001 and will ∴ translate and rotate as the aileron angular position changes.

For an overview of the free-body definition, see Figure 2-32. Grids form a vertical line at approximately mid slot.

Coordinate 2710101 is linked to the aileron hinge coordinate C2710001. As the aileron angle changes the free-body translates with it. It should be noted that it is imperative that free-body loads are recovered only with a matching aileron angle FEM and op2 result.

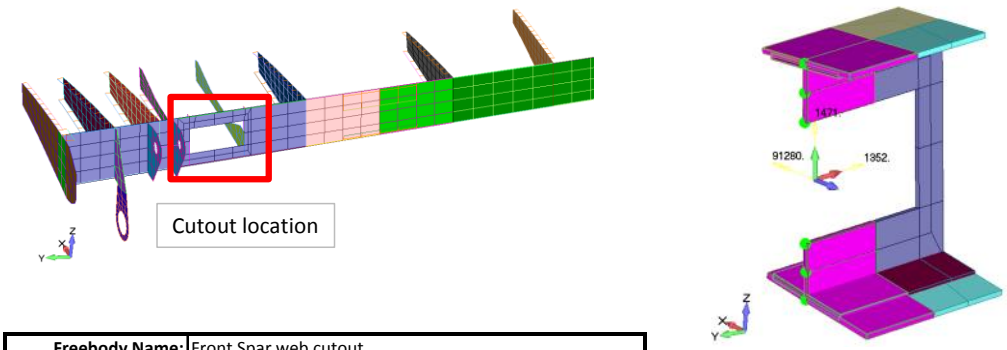

Freebody Name:	Front Spar web cutout					
Freebody Id.	2710101					
Coordinate Id.	2710101					
Origin:	C2710101 [0. ,0., 0.]					
Elements	2710804	2711684	2712531	2712831	2714536	2714560
	2714569	2714570	2714606	2714615		
Grids	2713620	2713621	2713623	2713626	2713787	2713803

Figure 2-32 Front spar web cut-out, free-body details

Forces are transferred from FEMAP to calculation file [8] sheet: *Cut-out Analysis* as follows.
The FEMAP menu sequence for extracting load is:

List Output Force Balance Interface Loads Summary
On the next pop-up menu select
Freebody Id. 2710101 & the appropriate set of load cases.

After pushing "OK", summary and details are written to a table in calculation file [8] and presented in this report as Table 2-39.

The extracted forces are presented in Table 2-39 and a graphical representation for case 3002 is shown in Figure 2-33.

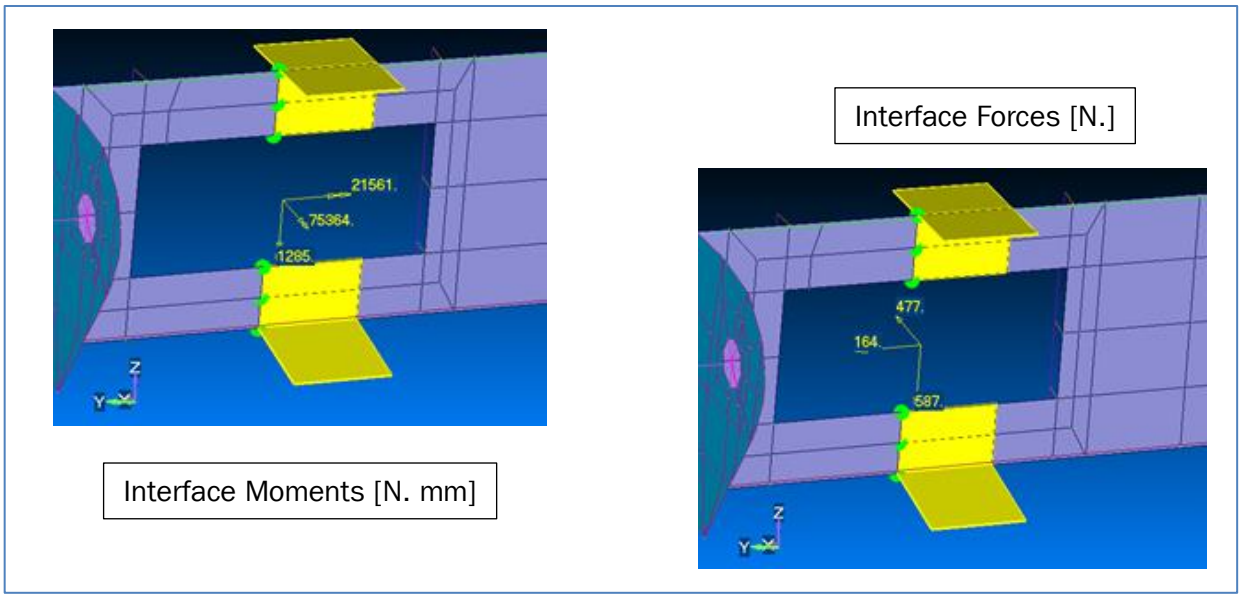

Figure 2-33 Front spar web cut-out, free-body 2710101, LC2001

Free Body Loads at the Mid Cut-out Position

The free body loads for the critical case 2001 are shown graphically in Figure 2-33

DFEM	Load Case	Freebody Id.	CORD Id.	FX	FY	FZ	MX	MY	MZ
				N.			N. mm		
20	2001			-163.8	-587.3	-476.6	21561	-1285	75363
30	3002			847.5	299.9	1090.9	-44484	3817	-36660
30	3003			-563.0	-893.1	-753.0	30929	-3468	48178
30	3051			-286.1	18.6	-212.0	2704	-877	2113
30	3052			286.1	-18.6	212.0	-2704	877	-2113
30	3053	2710102	2710102	-1793.1	101.0	49.9	1322	-94	15271
30	3054			1793.1	-101.0	-49.9	-1322	94	-15271
30	3055			243.9	-1402.7	-220.5	13502	-396	30979
30	3056			-243.9	1402.7	220.5	-13502	396	-30979
40	4004			873.0	700.2	1101.9	-46951	3581	-36194
50	5005			778.6	937.1	1075.2	-46599	3412	-23744

Table 2-39 Front spar web cut-out ultimate loading (from free-body).

Summary of RF's for the web cut out

A summary of RF's for the applicable load cases and strength checks are given in Table 2-40. A worked example for the critical case follows.

Strength check	Web Cutout Ultimate RF vs Load Case										
	2001	3002	3003	3051	3052	3053	3054	3055	3056	4004	5005
Cap_tension	18.59	28.06	15.73	99.9	239.58	99.90	38.91	10.09	10.55	16.36	13.85
Cap_compression	11.45	32.33	8.98	158.63	99.9	25.76	99.90	6.98	6.68	14.47	11.26
Edge_tension	4.79	8.90	3.34	242.6	112.1	47.03	19.41	2.13	2.20	4.16	3.20
Edge_compression	3.49	7.29	2.40	73.89	176.26	12.53	34.17	1.60	1.54	3.15	2.37
Web shear	19.74	38.65	12.98	624.09	624.09	114.75	114.75	8.26	8.26	16.55	12.37

Table 2-40 Summary of reserve factors for the front spar web cut-out in bay 3.

From the above table:

Critical case = 3056 Mass balance inertia, 36g -Z
Failure mode = compression at the cutout free edge.

RF = 1.03

Worked Example

Critical load case: 5056 All presented loads are ultimate.

The first step in PSM 5.3.5.7- is to transfer the panel edge loading to the mid slot position

At the mid slot position the "secondary" moment applied to the upper and lower beams is assumed to be zero.
i.e. At the mid slot location the panel moment is reacted as pure end loads in the secondary beams.
The free-body has "transferred" the panel edge load to the mid slot position.
It then follows that from simple statics.

$Pu_{end\ load} = F_{x(FB)}/2 + M_{z(FB)}/h'$ where: h' is the distance between upper and lower Tee section centroids.
$Pl_{end\ load} = F_{x(FB)}/2 - M_{z(FB)}/h'$

$Ps = F_{y(FB)}$

From this point the PSM section 5.3.5.7.3.1 method starts
Calculate the effective length of the secondary beams.

Geometry

Bay:
a = 75.0 mm
b = 70.8 mm
tw = 1.4 mm

Hole:
r = 8.00 mm Assumed rectangular section
b_hole = 38.10 mm
Ls = 68.16 mm
Leff =39.735 mm PSM Eq 5.3.5.7-1

Cap and Web:
Wu = 35.70 mm
t1u = 1.60 mm
t2u = 1.40 mm
tskin = 1.30 mm

WL = 35.80 mm
t1L = 1.60 mm
t2L = 1.40 mm
skin = 1.60 mm

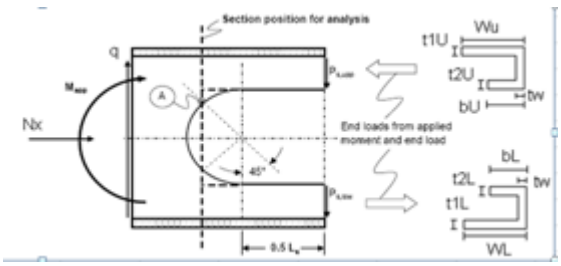

Section Properties at the Cut Caps

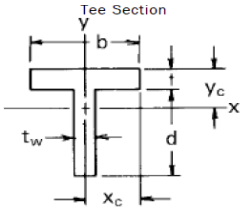

Calculate as a Tee sections

Assume effective skin width = "b" PSM 5.3.3.6 Sect. No. 4

	Section Upper	Section Lower		
b =	35.70	35.80	mm	
d =	16.35	16.35	mm	sym up low
t =	2.90	3.20	mm	tcap + tskin
tw =	1.40	1.40	mm	
A =	126.4	137.45	mm^2	
yc =	3.19	3.19	mm	
Ixx =	2284	2234	mm^4	

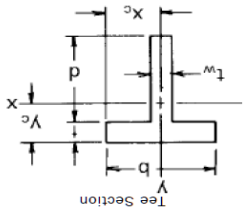

Crippling Allowables PSM 5.3.4.3

Web with free edge

	b1b	b1,eff	t1	t2	xi	yi	Fcc
	mm	mm	mm	mm			MPa
Upper	18.0	17.15	1.6	1.4	1.33	0.585	213.6
Lower	18.0	17.15	1.6	1.4	1.33	0.585	213.6
			cap	Web free edge		Min =	213.6

Loads (Table 2-39)

Nx =	P_{end} =	-243.9 N.
Nxy =	P_s =	-1402.7 N.
Mz =	$M_{mid\ slot}$ =	-30979 N. mm

$k_{upp} = \left(\frac{L_{eff}^3}{3EI_{upp}}\right)+\left(\frac{L_{eff}}{GA_{upp}}\right)$ (39.7^3/3*71710*2284)+(39.7/27000*126.4) = 1.39E-4

$k_{low} = \left(\frac{L_{eff}^3}{3EI_{low}}\right)+\left(\frac{L_{eff}}{GA_{low}}\right)$ (39.7^3/3*71710*2234)+(39.7/27000*137.5) = 1.41E-4

$P_{s,upp} = \left(\frac{k_{low}}{k_{upp}+k_{low}}\right)P_s$ (1.41/(1.39+1.41))*(-1402.7) = -706.4 N.

$P_{s,low} = \left(\frac{k_{upp}}{k_{upp}+k_{low}}\right)P_s$ (1.39/(1.39+1.41)*(-1402.7) = -696.3 N.

$M_{upp} = P_{s,upp}[(0.50L_s)+(0.707r)]$ -706.4*[(0.5*68.2) + (0.707*8.0)] = -28083.6. N mm

$M_{low} = P_{s,low}[(0.50L_s)+(0.707r)]$ -696.3*[(0.5*68.2) + (0.707*8.0)] = -27682.1. N. mm

$P_{c,upp} = \left(\frac{A_{upp}}{A_{upp}+A_{low}}\right)P_c$ (126.4/(126.4+137.5))*(-243.9) = 116.8 N.

$P_{c,low} = \left(\frac{A_{low}}{A_{upp}+A_{low}}\right)P_c$ (137.5/(126.4+137.5))*(-243.9) = 127.1 N.

Section Stress Level

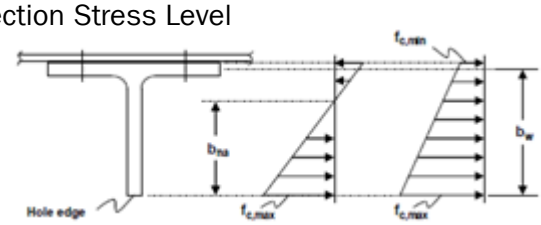

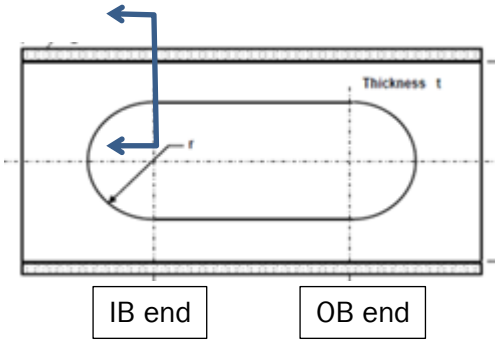

Calculate stress levels at extreme edges

	Inboard End		Outboard End		
	Upper	Lower	Upper	Lower	
Stress at Cap Flange Extreme Corner					
ybar =	3.2	3.2	3.2	3.2	mm
σa =	2.6	-4.1	2.6	-4.1	MPa
σb =	39.2	-39.6	-39.2	39.6	MPa
σ =	41.8	-43.7	-36.7	35.4	MPa
τ =	30.9	30.4	30.9	30.4	MPa
Stress at Cap Flange Mid Thickness					
ybar =	1.7	1.6	1.7	1.6	mm
σa =	2.6	-4.1	2.6	-4.1	MPa
σb =	21.4	-19.7	-21.4	19.7	MPa
σ =	24.0	-23.9	-18.9	15.6	MPa
τ =	30.9	30.4	30.9	30.4	MPa
Stress at Web Free Edge					
ybar =	16.1	16.4	16.1	16.4	mm
σa =	2.6	-4.1	2.6	-4.1	MPa
σb =	-197.3	202.7	197.3	-202.7	MPa
σ =	-194.7	198.5	199.8	-206.8	MPa
τ =	30.9	30.4	30.9	30.4	MPa

From above use critical cap and free edge stress levels and appropriate allowable to calculate a set of RF's.
Conservatively, no benefit is take from "2/3"[14] rule. Free edge stress is compared directly to Fcc.

	Applied	Allow		RF	
	MPa	Criteria	MPa		
Tension σ_{cr}	41.8	Ftu	441	10.56	Cap flange
Comp σ_{cr}	-43.7	0.8*Fcy	292	6.69	Cap flange
Tension σ_{cr}	199.8	Ftu	441	2.21	Cut out Free edge
Comp σ_{cr}	-206.8	$Fcc_{free\ edge}$	214	1.03	Cut out Free edge
Shear τ	30.9	Fsu	255	8.27	

Critical RF occurs when the free edge is in compression.

$$RF = F_{cc}/F_{free\ edge} = 214./206.8 \qquad \textbf{RF = 1.03}$$

[14] PSM 5.3.5.7 page 5.3.5.7-7

2.5.6.10 Front Spar Splice

The front spar is split into two parts:

An inboard part which contains rod 9 control arm and the inboard hinge lugs

An outboard part consisting of simple webs and caps

The two parts are spliced together in bay 4. The arrangement and location of the splice is shown in Figure 2-34.

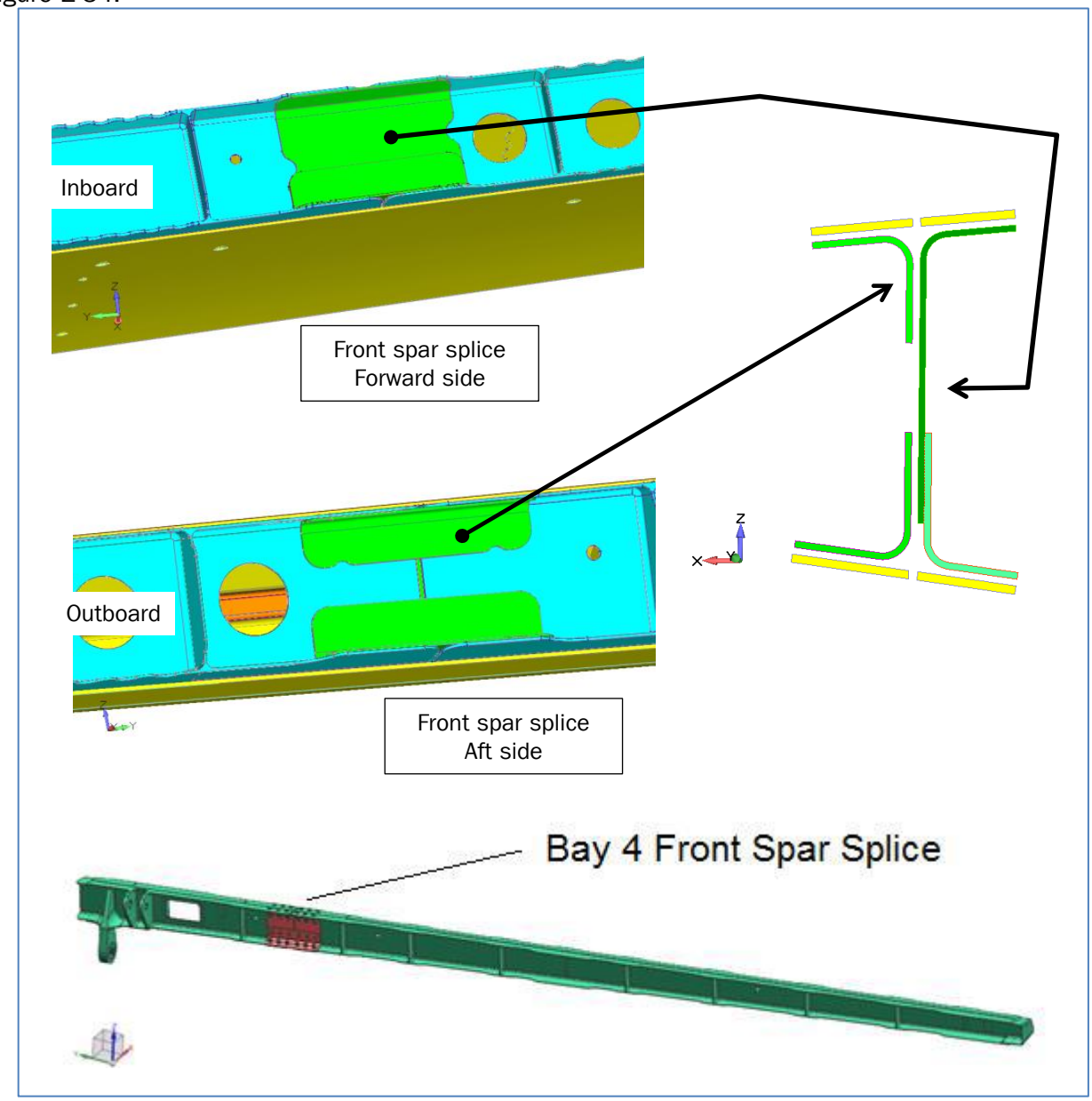

Figure 2-34 Location and arrangement of the FS splice at bay

2.5.6.10.1 Splice Fastener Details and Allowables

There are seven rows of fasteners in the splice, each with six individual fasteners, for a total of 40 in the joint. A cross-section through the splice fittings is shown below, with the parts and fastener types called out accordingly.

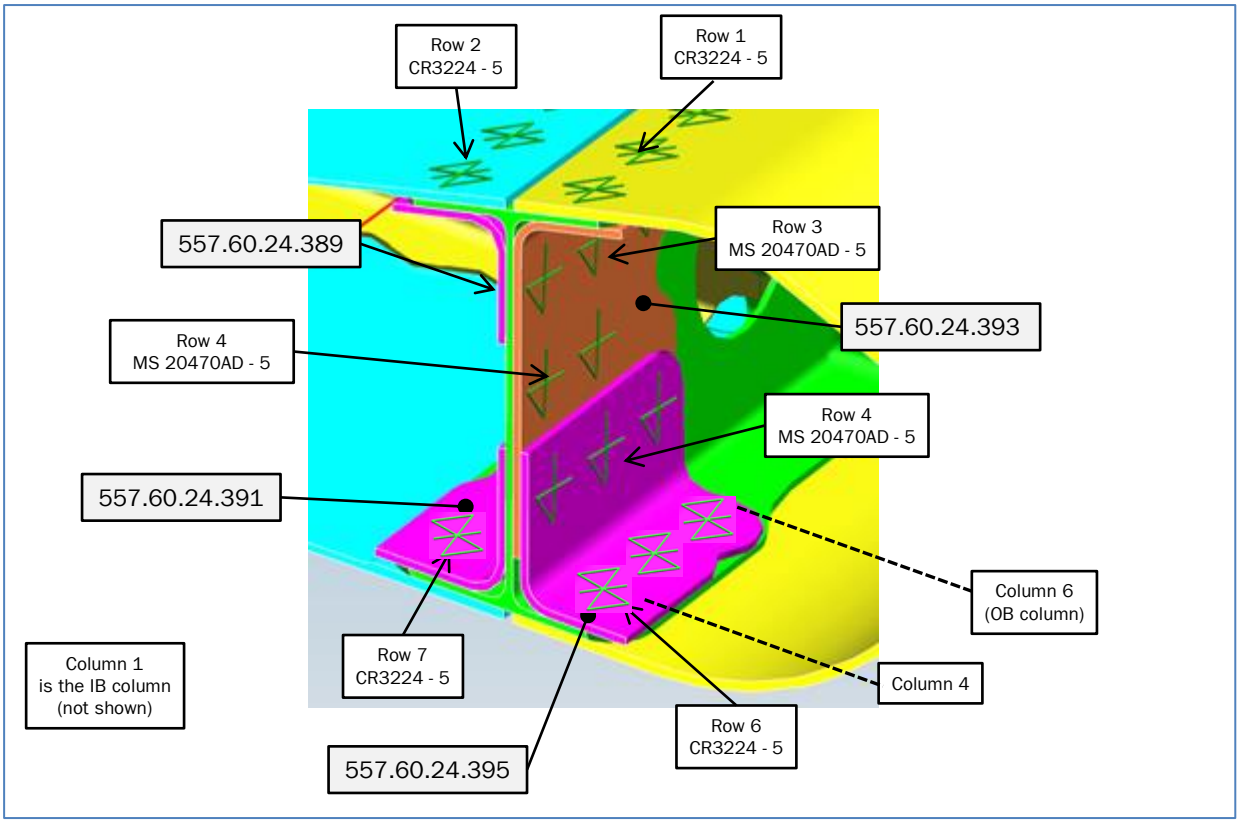

Figure 2-35 Front spar splice in bay 4, key for rows and column Id's

Joint Fastener Details and Allowables

Row =	1	2	3	4	5	6	7	Units
Material:				2124-T851				
Fastener ID:	CR3224	CR3224	MS20470AD	MS20470AD	MS20470AD	CR3224	CR3224	
Dash No =	5	5	5	5	5	5	5	
D =	4.00	4.00	4.00	4.00	4.00	4.00	4.00	mm
t =	1.20	1.20	1.20	1.20	1.20	1.20	1.20	mm
Allow: shear =	7786	7786	4507	2253	4507	7786	7786	N.
Allow: bearing	1560	1560	Shear Crt	Shear Crt	Shear Crt	1560	1560	N.

Table 2-41 Front spar splice in bay 4, spar fastener details.

Row =	1	2	3	4	5	6	7	
Material:	2024-T42	2024-T3				2024-T42	2024-T3	
Fastener ID:	CR3224	CR3224				CR3224	CR3224	
Dash No =	5	5				5	5	
D =	4.00	4.00				4.00	4.00	mm
t =	1.6	1.6				1.6	1.6	mm
Allow: shear =	3893	3893				3893	3893	N.
Allow: bearing	1875	1732				1875	1732	N.

Table 2-42 Front spar splice in bay 4, skin fastener details.

Row =	1	2	3	4	5	6	7	
Material:	2024-T3							
Fastener ID:	CR3224	CR3224	MS20470AD	MS20470AD	MS20470AD	CR3224	CR3224	
Dash No =	5	5	5	5	5	5	5	
D =	4.00	4.00	4.00	4.00	4.00	4.00	4.00	mm
t_{FWD} =	1.3	1.3	1.3	1.3	1.3	1.3	1.3	mm
t_{AFT} =	1.3	1.3	1.3	1.3	1.3	1.3	1.3	mm
t_{MIN} =	1.30	1.3	1.3	1.3	1.3	1.3	1.3	mm
Allow: shear =	3893	3893	2253	2253	2253	3893	3893	N
Allow: bearing	1950	1950	Shear Crt	Shear Crt	Shear Crt	1950	1950	N

Table 2-43 Front spar splice in bay 4, splice fastener details.

2.5.6.10.2 Loading at Splice Centre

The splice is analysed by cutting the joint assembly in half (as shown in Figure 2-35). Loading for the “half” joint is then extracted from FEM [3] to [6] via the FEMAP free-body tool.

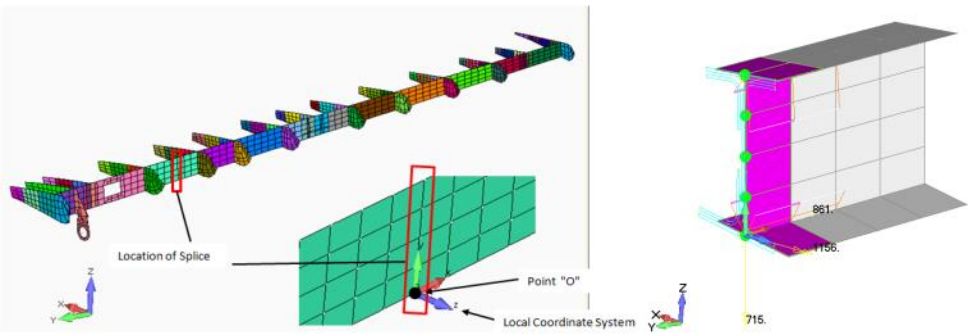

Freebody Name:	Front Spar splice					
Freebody Id.	2710102					
Coordinate Id.	2710102					
Origin:	C2710102 [0. ,0., 0.]					
Elements	2714760	2714764	2714768	2714772	2715013	2715017
	2715182	2715186	2715190	2715193		
Grids	2714137	2714138	2714139	2714151	2714152	

Figure 2-36 Front spar splice, free-body details

Section loading from the free-body tool about origin of coordinate 2710102 (see Figure 2-36) is presented in Table 2-44

FX = Joint Axial Load
FY = Joint Vertical Shear
FZ = Not applicable to joint loading
MX = Not applicable to joint loading
MY = Not applicable to joint loading
MZ = Joint Primary Bending Moment on the Spar. MZ>0 is tension in the Upper Fiber and compression in the Lower.

		Freebody Loads at C2710102 [0.,0.,0.]								Splice Aft Bolt Group CG		
DFEM	**Load Case**	**Freebody Id.**	**CORD Id.**	**FX**	**FY**	**FZ**	**MX**	**MY**	**MZ**	**P**	**V**	**M**
				N.			**N. mm**			**N**		**N. mm**
20	2001			-198	175	4	131	-645	35444	-198	175	24600
30	3002			444	-384	-29	-1404	3549	28495	444	-384	52621
30	3003			-193	52	10	1408	-1876	22956	-193	52	15199
30	3051			-561	-1	0	47	-394	19769	-561	-1	826
30	3052			561	1	0	-47	394	-19769	561	1	-826
30	3053	2710102	2710102	-960	45	-2	-33	45	40587	-960	45	7061
30	3054			960	-45	2	33	-45	-40587	960	-45	-7061
30	3055			-55	-151	0	-35	-167	68379	-55	-151	70105
30	3056			55	151	0	35	167	-68379	55	151	-70105
40	4004			460	-319	-23	-1182	2902	14224	460	-319	37332
50	5005			508	-305	16	-22246	1663	5435	508	-305	29845

Table 2-44 Front spar splice in bay 4, section loading at splice.

2.5.6.10.3 Splice Fastener Loading

To convert free-body loads to fastener loads, a classic 2D bolt group approach is used. For all fasteners it is assumed they carry shear forces alone. This assumption is imposed by the use of individual X and Y axis weighting factors. The weighting factor comprises of an efficiency factor and fastener diameter[15]. For example:

Relative to the local joint C2710102

Fasteners in the spar web can carry	X (end load)	∴ Wx = 1* fastener dia.
	Y (shear load)	∴ Wy = 1.*fastener dia.
Fasteners in the spar caps carry	X (end load)	∴ Wx = 1* fastener dia.
Fasteners in the spar caps DO NOT carry	Y(shear loads)	∴ Wy = 0.* fastener dia.

The 2D bolt group is implemented in a tabular manner. The tables are presented in Appendix N.

Step 1 Geometry processing:

Overview	Table of fastener diameters	T1
	Table of efficiency factors	T2
	Tables of weighting factors	T3 =T1 *T2
	Tables of fastener locations	T4
	Tables of weighting*offsets	T5 = T3*T4
	Tables of weighting*offsets^2	T6 = T5*T4

CG Locations

Σ(Wy)	= 128.	Σ(Wx)	= 320. mm
Σ(Wy)*X	= -3034	Σ(Wx)*Y	= 10813.mm
Σ(Wy)*X^2	= 91864	Σ(Wx)*Y^2	= 609976. mm^2

X_{CG} = Σ(Wy)*X / Σ(Wy) = -3034/128 =-23.7 mm

Y_{CG} = Σ(Wx)*Y / Σ(Wx) = 10813/320. = 33.8 mm

Joint inertia

$I = \Sigma(Wy)*X^2 + \Sigma(Wx)*Y^2 - X_{CG}* \Sigma(Wy)*X - Y_{CG}* \Sigma(Wx)*Y$

I = 91864 + 609976 – (-23.7)*(-3034) – 33.8*10813 =264579. mm2

Step 2 Transform loading to bolt group centroid:

Transformation of free-body loads to splice centroid

Freebody	Splice joint
Fx	P
Fy	V
Mz	$M = Mz - Fx*y_{CG} - Fy*x_{CG}$

Example for LC 3055

Freebody	Splice joint
Fx = –55.0	P = -55.0 N
Fy = -151.0	V = -151.0 N.
Mz = 68379.0	M = 68379+(-54.8)*(33.8)-(-150.9)*(-23.7) = 62952 N. mm

[15] Assumes a bearing critical joint, with a single splice thickness.

Step 3 Calculate Fastener Loads

Fastener individual loads are given by

$Fy_{(i)v} = V*Wy_{(i)}/\Sigma(Wy)$ $Fy_{(i)M} = M*Wy_{(i)}*(X-X_{cg})/I$

$Fx_{(i)p} = P*\ Wx_{(i)}/\Sigma(Wx)$ $Fx_{(i)M} = M*Wx_{(i)}*(Y-Y_{cg})/I$

$F_{(i)} = SQRT((Fy_{(i)v} + Fy_{(i)M})^2 + (Fx_{(i)p} + Fx_{(i)M})^2)$

Calculation of individual fastener loads is implemented in a tabular manner. Tables for two critical cases are presented in Appendix N, Table 6-33 & Table 6-34

Fastener loading tables include summations; to enable static equilibrium checks.

$\Sigma Fy_{(i)v}$	= applied V	$\Sigma Fx_{(i)p}$	= applied P
$\Sigma Fy_{(i)M}$	= 0.	$\Sigma Fx_{(i)M}$	= 0.

Critical case; Aero case:	3002, max applied moment (34407. N.mm)	(Table 2-44)
Critical case; Inertia case:	3055, max applied moment (62952. N.mm)	(Table 2-44)

<u>Example Fastener calculation at row 7 column 3 intersect</u>

Load Case:	3055		(Table 2-44)
Joint Load:	P = -55. N.		
	V = -151. N.		
	M = 62952. N. mm		
Joint CG:	X_{cg} = -23.7 mm	$\Sigma(Wx)$ = 320.	(Table 6-31)
	Y_{cg} = 33.8 mm	$\Sigma(Wy)$ = 128.	
	I = 264579		
Location:	X = -9.7 mm	Wx = 16.	
	Y = -0.7 mm	Wy = 0.	

Py_v = -151*0./128 = 0.0 Py_m = 62952.*0.*((-9.7)-(-23.7))/264579. = 0.0 N.

Fastener in spar cap ∴ does not transfer web shear

Px_p = -55*16./320 = -2.8 Px_m = 62952.*16*(-0.7 - 33.8)/264579. = -131.3 N.

Matches values in Table 6-33

<u>Example Fastener calculation at row 5 column 3 intersect</u>

Load Case:	3055		(Table 2-44)
Joint Load:	P = -55. N.		
	V = -151. N.		
	M = 62952. N. mm		
Joint CG:	X_{cg} = -23.7 mm	Σ(Wx) = 320.	(Table 6-31)
	Y_{cg} = 33.8 mm	Σ(Wy) = 128.	
	I = 264579		
Location:	X = -9.7 mm	Wx = 16.	
	Y = 18.1 mm	Wy = 16.	

Py_v = -151*16/128 = -18.9 N. Py_m = 62952.*16*((-9.7)-(-23.7))/264579. Fy = 53.3 N.
Fastener in spar cap ∴ does not transfer web shear

Px_p = -55*16./320 = -2.8 Px_m = 62952.*16*(18.1 - 33.8)/264579. Fx = -59.8 N.

Matches values in Table 6-33

Step 4 Fastener Loading From LE & Box Skin Panels

In addition to splice loads, fasteners in rows 1&2 and 6&7 have loading components from the box and LE skin panels. See Figure 2-37.

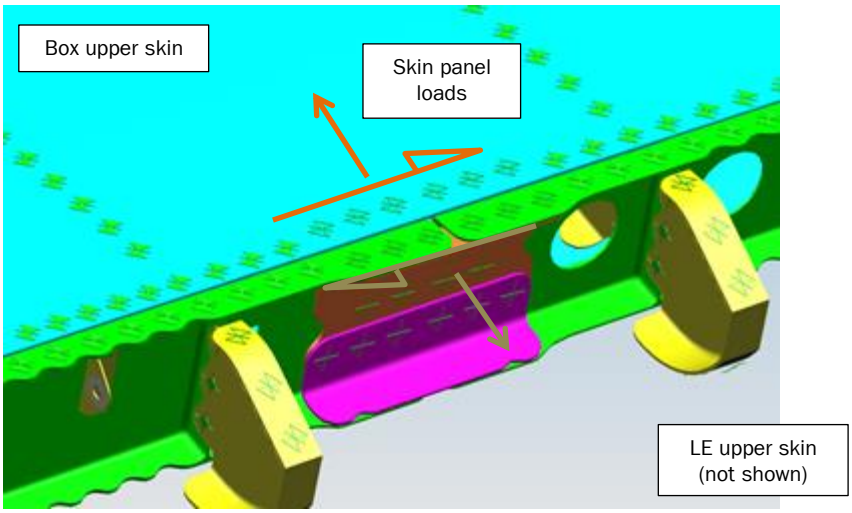

Figure 2-37 Front spar splice additional loading from box skin panels

The additional loading components are presented in Table 2-45 & Table 2-46. To simplify the analysis, abs values are use when resultants of panel and splice load components are determined.

	Box Upper Skin						Box Lower Skin					
Load Case	PANEL Id	Pitch	Running Load		/ Fastener		PANEL Id	Pitch	Running Load		/ Fastener	
			Fx	Fxy	Fy	Fxy			Fx	Fxy	Fy	Fxy
		mm	N/mm		N.			mm	N/mm		N.	
2001			0.2	-7.1	2.4	106.7			2	5.4	30.0	81.0
3002			1.0	18.6	14.3	279.7			-3.6	-13.3	54.0	199.5
3003			-0.7	-12.9	10.4	194.0			3.3	8.9	49.5	133.5
3051			0.0	0.0	0.0	0.0			0	0	0.0	0.0
3052			0.0	0.0	0.0	0.0			0	0	0.0	0.0
3053	12040	15.0	0.5	0.6	6.9	9.4	22040	15.0	-0.1	-0.6	1.5	9.0
3054			0.6	1.0	8.3	14.4			-0.2	-0.5	3.0	7.5
3055			0.0	0.0	0.0	0.0			0	0	0.0	0.0
3056			0.0	0.0	0.0	0.0			0	0	0.0	0.0
4004			0.9	19.1	12.8	286.4			2	5.4	30.0	81.0
5005			0.1	18.8	1.1	282.4			-4.4	-14.6	66.0	219.0

Table 2-45 Box upper and lower skin panel loads for by bay 4

	LE Upper Skin						LE Lower Skin					
Load Case	PANEL Id	Pitch	Running Load		/ Fastener		PANEL Id	Pitch	Running Load		/ Fastener	
			Fx	Fxy	Fy	Fxy			Fx	Fxy	Fy	Fxy
		mm	N/mm		N.			mm	N/mm		N.	
2001			6.8	-2.1	102.4	31.1			8.7	-0.1	131.2	2.2
3002			-20.2	6.5	302.5	97.3			-21.5	0.0	321.9	0.6
3003			10.9	-4.5	163.2	67.7			13.8	-0.3	206.8	4.9
3051			-3.1	0.9	46.4	14.0			2.0	0.1	30.3	1.2
3052			3.1	-0.9	46.4	14.0			-2.0	-0.1	30.3	1.2
3053	11040	15.0	-1.5	0.2	22.9	3.4	21040	15.0	2.0	0.0	29.7	0.1
3054			1.5	-0.2	22.9	3.4			-2.0	0.0	29.7	0.1
3055			-1.2	-3.3	18.7	50.0			3.6	2.0	53.6	29.8
3056			1.2	3.3	18.7	50.0			-3.6	-2.0	53.6	29.8
4004			-19.5	6.4	292.5	96.3			-22.2	0.1	332.5	2.1
5005			-18.0	6.2	270.4	93.2			-22.9	-0.3	344.2	4.7

Table 2-46 LE upper and lower skin panel loads for by bay 4

2.5.6.10.4 Splice Fastener RFs

The final step in the splice analysis is to combine loading and calculate the RF.
From inspection of Table 2-49, critical case for fasteners is 5005.
Ps is the fastener loading from cutting the spar. As can be observed this is < than fastener load from the box and LE skins.

For the Skins: LC 5005

Row =	1	2	3	4	5	6	7	
Material:	2024-T42	2024-T3				2024-T42	2024-T3	
Fastener ID:	CR3224	CR3224				CR3224	CR3224	
Dash No =	5	5				5	5	
D =	4.00	4.00				4.00	4.00	mm
t =	1.6	1.6				1.6	1.6	mm
Type	Single	Single				Single	Single	N.
Allow: shear =	3893	3893				3893	3893	N.
Allow: bearing	1875	1732				1875	1732	N.
Ps =	6	6				32	32	N.
Px(skin panel) =	270	1				344	66	N.
Pxy(skin panel) =	93	282				5	219	N.
Pres =	288	288				346	260	N.
FF =	1.15	1.15				1.15	1.15	
RF =	5.66	5.22				4.71	5.79	

For the Spar: LC 5005

Row =	1	2	3	4	5	6	7	Units
Material:				2124-T851				
Fastener ID:	CR3224	CR3224	MS20470AD	MS20470AD	MS20470AD	CR3224	CR3224	
Dash No =	5	5	5	5	5	5	5	
D =	4.00	4.00	4.00	4.00	4.00	4.00	4.00	mm
t =	1.20	1.20	1.20	1.20	1.20	1.20	1.20	mm
Type	Double	Double	Double	Single	Double	Double	Double	N.
Allow: shear =	7786	7786	4507	2253	4507	7786	7786	N.
Allow: bearing	1560	1560	Shear Crt	Shear Crt	Shear Crt	1560	1560	N.
Ps =	12	12	54	59	69	65	65	N.
Px(skin panel) =	270	1				344	66	N.
Pxy(skin panel) =	93	282				5	219	N.
Pres =	290	294	54	59	69	351	292	N.
FF =	1.15	1.15	1.15	1.15	1.15	1.15	1.15	
RF =	4.68	4.61	72.09	33.10	56.43	3.86	4.65	

For the Splice Parts: LC 5005

Row =	1	2	3	4	5	6	7	
Material:	2024-T3							
Fastener ID:	CR3224	CR3224	MS20470AD	MS20470AD	MS20470AD	CR3224	CR3224	
Dash No =	5	5	5	5	5	5	5	
D =	4.00	4.00	4.00	4.00	4.00	4.00	4.00	mm
t_{FWD} =	1.3	1.3	1.3	1.3	1.3	1.3	1.3	mm
t_{AFT} =	1.3	1.3	1.3	1.3	1.3	1.3	1.3	mm
t_{MIN} =	1.30	1.3	1.3	1.3	1.3	1.3	1.3	mm
Type	Single	Single	Single	Single	Single	Single	Single	mm
Allow: shear =	3893	3893	2253	2253	2253	3893	3893	N
Allow: bearing	1950	1950	Shear Crt	Shear Crt	Shear Crt	1950	1950	N
Ps =	6	6	27	59	35	32	32	N
FF =	1.15	1.15	1.15	1.15	1.15	1.15	1.15	
RF =	282.67	282.67	72.09	33.10	56.43	52.18	52.18	

Critical part of the joint is spar lower spar cap at row 6.

2.5.6.10.5 Splice Net Section Area Strength

At "fastener" columns 3 and 4, by-pass loading in the splice parts is at a maximum and net area at a minimum.
A simple conservative approach will be made; each slice part will be decomposed into a simple rectangle with "hole-out" from one fastener removed[16].

Column 3/4 Net Section Properties

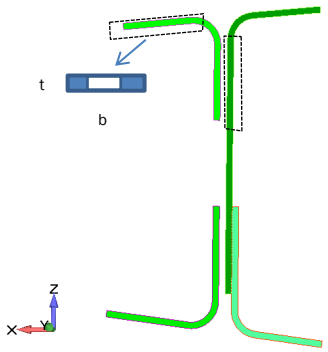

Column	Row	Part	b	t	Dia	$Area_{net}$	y	Ay	Ay2	I
				mm		mm^2	mm	mm^3	mm^4	mm^4
3 or 4	1	Angle	14.0	1.3	4.00	16.51	66.40	1096	72792	2
	2	Angle	14.0	1.3	4	16.5	66.40	1096	72792	2
	3	Angle Angle	14.0 14.0	1.3 1.3	4.00	29.5	52.30	1543	80718	217
	4	Web	16.0	1.3	4.00	10.4	35.20	366	12886	35
	5	Angle Web Angle	18.0 18.0 18.0	1.3 1.3 1.3	4.00	54.6	18.10	988	17888	892
	6	Angle	14.0	1.3	4.00	16.5	-0.70	-12	8	2
	7	Angle	14.0	1.3	4.00	16.51	-0.70	-12	8	2
					S =	161		5067	257092	1151

Table 2-47 Splice net section properties at column ¾

Section Properties

A_{net} =	161	mm^2	
$A_{shear\ net}$ =	106	mm^2	Net area from rows 3 to 5 (alone)
y_{cg} =	31.6	mm	
$y_{row1\&2}$ =	34.8	mm	y for "upper cap" net area stress
$y_{row6\&7}$ =	-32.3	mm	y for"lowper cap" net area stress
I_{net} =	98319	mm^4	

Column 3 - 4 Net Section Stress Levels

The section centroid is sufficiently close to the bolt group (as it should be) to utilize Table 2-44 "Splice bolts Group" loads.

Calculate direct stress using simple engineering bending at: Upper fastener rows 1&2
Lower fastener rows 6&7.

Calculate shear stress from simple V/A_{net} at: Web rows 3 to 5

Load Case	Section Ult. Loads (Splice Bolt Group cg)			Stress Levels		
				Direct & Bending		Shear
	Direct	Shear	Moment	Row 1&2	Row 6&7	Row 3to5
	N.	N.	N. mm	MPa		
2001	-198.5	174.6	32875	10.4	-12.0	1.7
3002	444.5	-384.2	34407	15.0	-8.5	-3.6
3003	-192.9	52.3	17678	5.1	-7.0	0.5
3051	-561.3	-1.0	778	-3.2	-3.8	0.0
3052	561.3	1.0	-778	3.2	3.8	0.0
3053	-960.3	45.5	9217	-2.7	-9.0	0.4
3054	960.3	-45.5	-9217	2.7	9.0	-0.4
3055	-54.8	-150.9	62952	22.0	-21.0	-1.4
3056	54.8	150.9	-62952	-22.0	21.0	1.4
4004	460.0	-319.2	22201	10.7	-4.4	-3.0
5005	508.4	-305.1	15385	8.6	-1.9	-2.9
3055			Max_{abs} =	22.0		
3055			Max_{abs} =		21.0	
3002			Max_{abs} =			3.6

Table 2-48 Net section stress levels at splice column 3/4

Pass by inspection direct and shear stress <20 MPa **RF = > 2.00**

[16] For parts in compression fastener "hole-out" is not required. However for simplicity reasons hole-out has been applied to all parts irrespective of load direction.

Summary of Bay 4 Splice Joint RF's for all Load Cases

Strength Criteria	Front Spar Slice Joint RF vs Load Case										
	2001	3002	3003	3051	3052	3053	3054	3055	3056	4004	5005
U Skin fasteners	>2.00	>2.00	>2.00	>2.00	>2.00	>2.00	>2.00	>2.00	>2.00	>2.00	>2.00
Spar fasteners	>2.00	>2.00	>2.00	>2.00	>2.00	>2.00	>2.00	>2.00	>2.00	>2.00	>2.00
Splice fasteners	>2.00	>2.00	>2.00	>2.00	>2.00	>2.00	>2.00	>2.00	>2.00	>2.00	>2.00
L Skin fasteners	>2.00	>2.00	>2.00	>2.00	>2.00	>2.00	>2.00	>2.00	>2.00	>2.00	>2.00
U skin net stress	>2.00	>2.00	>2.00	>2.00	>2.00	>2.00	>2.00	>2.00	>2.00	>2.00	>2.00
Web shear stress	>2.00	>2.00	>2.00	>2.00	>2.00	>2.00	>2.00	>2.00	>2.00	>2.00	>2.00
L skin net stress	>2.00	>2.00	>2.00	>2.00	>2.00	>2.00	>2.00	>2.00	>2.00	>2.00	>2.00

Table 2-49 Front spar splice joint, summary of RF's

Splice Fasteners
Critical Case: 5005 (RF = 3.86)
Critical location: Spar row 9
RF = 3.86 (page 102)

RF = >2.00
Includes a fitting factor of 1.15

Net Section Stress
Critical Case: 3053
Critical location: Lower Spar cap row 6 - 7

RF = >2.00
Includes a fitting factor of 1.15

2.5.6.11 Inboard Support Hinge Lugs

The inboard support hinge is integrally machined into the inboard part of the front spar. The joint arrangement showing the corresponding support bracket is shown in Figure 2-38 and idealized lug dimensions in Figure 2-39.

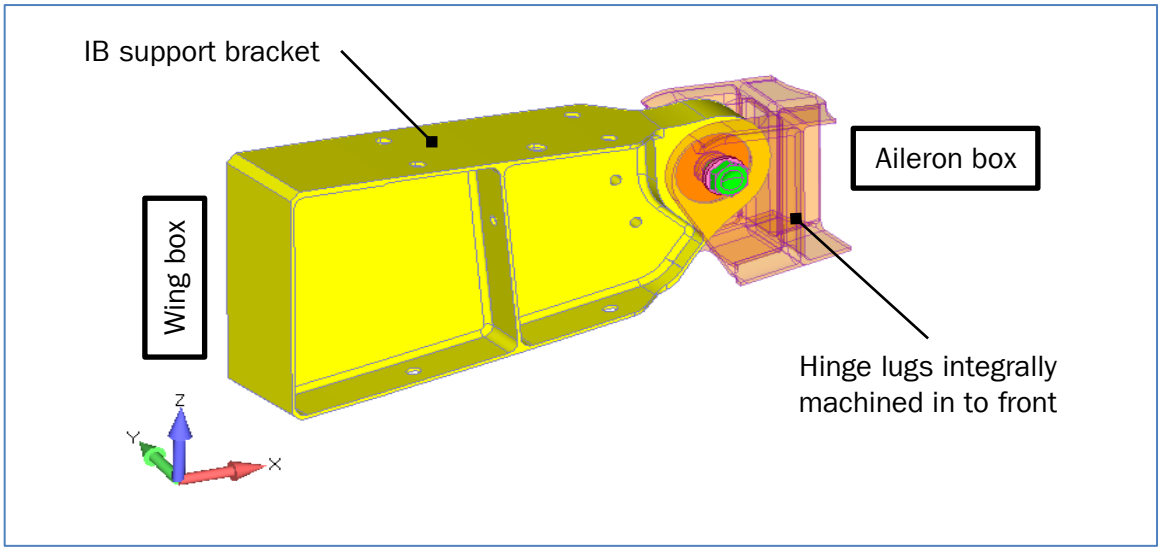

Figure 2-38 IB aileron hinge joint arrangement

Loading for the hinged joint is taken from aileron interface report ref [13] Interface loads from ref. [13] are presented in the A/Coordinate system. For the lug analysis a local coordinate system has been defined which aligns with the idealized lug axial and transverse axis. The lug local axis aligns with the aileron hinge coordinate system (C2710001). The joint is considered symmetric i.e. a 50/50 load split is assumed between inboard and outboard lugs.

A/C coordinate system							
Angle [°]	-22	0	0	0	0	3	10
Load Case	**2001**	**3002**	**3003**	**3053**	**3054**	**4004**	**5005**
Limit [N.] Aero Pressure + Wing Bending							
Fx	1155	-7744	3561			-5875	-5547
Fy	23	-102	103			-67	-12
Fz	-444	5482	-2117			4271	3975
$[Fx,Fz]_{res}$	1237	9488	4143			7263	6824
Ultimate [N.] Inertia, Y-direction 18g							
Fx				-282	282		
Fy				3250	-3250		
Fz				-185	185		
$[Fx,Fz]_{res}$	0	0	0	337	337	0	0

Lug coordinate system							
Angle [°]	-22	0	0	0	0	3	10
Load Case	**2001**	**3002**	**3003**	**3053**	**3054**	**4004**	**5005**
Ultimate [N.]							
Fx	-1364	11670	-5368	-2	2	9174	9252
Fy	69	-273	85	-3267	3267	-211	-282
Fz	-1257	8142	-3134	48	-48	5874	4371
$[Fx,Fz]_{res}$	1855	14230	6215	48	48	10894	10232

Table 2-50 Outboard support bracket interface loads.

The analysis for the lug is carried out by PSM 5 3 11 4_01.xlsm. This is an approve tool for use on the PC-24 project; as such a fully detailed worked example is not required. However for the critical case all input data is presented to enable independent verification. For the pin analysis see the support bracket lugs and pin, section 2.5.15.3.

Material strength data is given below and dimensional data in Figure 2-153.

Lug Material

Material	= 2124-T851
Basis	= A
Ftu	= 441.0 MPa
Fty	= 379.0 MPa
Fcy	= 365.0 MPa
Fbry15	= 545.0 MPa
Fbry20	= 634.0 MPa

Pin Material

Material	= A286 steel
Basis	= S
Ftu	= 1103.0 MPa
Fsu	= 655.0 MPa

Bush Material

Material	= Al-Bz, AMS4640
Fcy = Fty	= 469.0 MPa

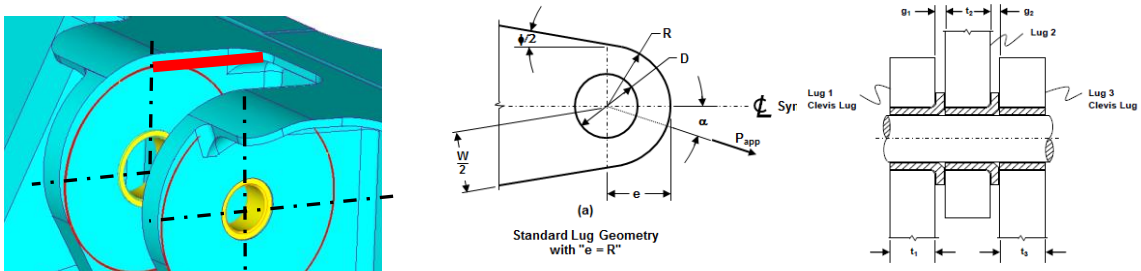

Lug Geometry

D =	15.88	mm
DPO =	9.50	mm
t =	5.25	mm
e =	21.23	mm
R =	21.23	mm
W/2 =	21.23	mm
phi =	0.00	deg

Pin Geometry

Dia =	9.50	mm
t1 =	5.25	mm
g1 =	3.90	mm
t2 =	20.70	mm
g2 =	3.90	mm
t3 =	5.25	mm

Bush Geometry

Di,bh =	12.70	mm
Do,bh =	15.88	mm

Figure 2-39 Outboard aileron support bracket, idealized lug and pin dimensions.

A summary of lug RF's is presented in Table 2-51. The lateral load component acting on the lugs is covered by the biaxial strength analysis in section 2.5.6.4.

Criteria	Lug Ultimate Reserve Factor vs Load Case Id						
	2001	3002	3003	3053	3054	4004	5005
Lug stg	27.81	3.65	8.39	1028.18	1028.18	4.78	5.12

Table 2-51 Summary of OB hinge lug RF's.

Lug
Critical Load Case = 3002
Failure mode Tension strength ultimate

RF = >2.0
RF includes a fitting factor of 1.15

Summary of Lug Input – Output Data for Critical Case

Loading

Load Case	= 3002		
Safety Factor	= 1.50		
		Ult	Limit
Axial Load	P_{ax} =	7002.	4668. N.
Transverse Load	P_{tr} =	4885.	3257. N.
Resultant Load	P_{app} =	8538.	5692. N
Alpha =		34.9	34.9 deg.

Lug RF Summary from PSM 5 3 11 4 01.xlsm

Failure mode	Applied [N.]	Allowable [N.]	RF
Tension strength ultimate , P_{tu}	8538.	35842.	3.65
Tension strength limit, P_{ty}	5692.	33884.	5.18
Lug net section tension strength limit, $P_{ty,ns}$	5692.	52908.	8.08
Lug bearing strength limit, P_{bry}	5692.	38041.	5.81
Bush bearing strength limit, P_{bry}	5692.	57851.	8.84

Failure mode = Tension strength ultimate **RF = >2.00**
RF includes a Fitting Factor of 1.15

2.5.6.12 Rod 9 Control arm

The aileron angular position is controlled via the flight control system (FCS). In particular FCS "Rod9" attaches to and actuates the aileron. It introduces control loads into the aileron box via an arm integrally machined into the front spar. The arrangement of the control arm and rod 9 together with various sections can be seen in Figure 2-40.

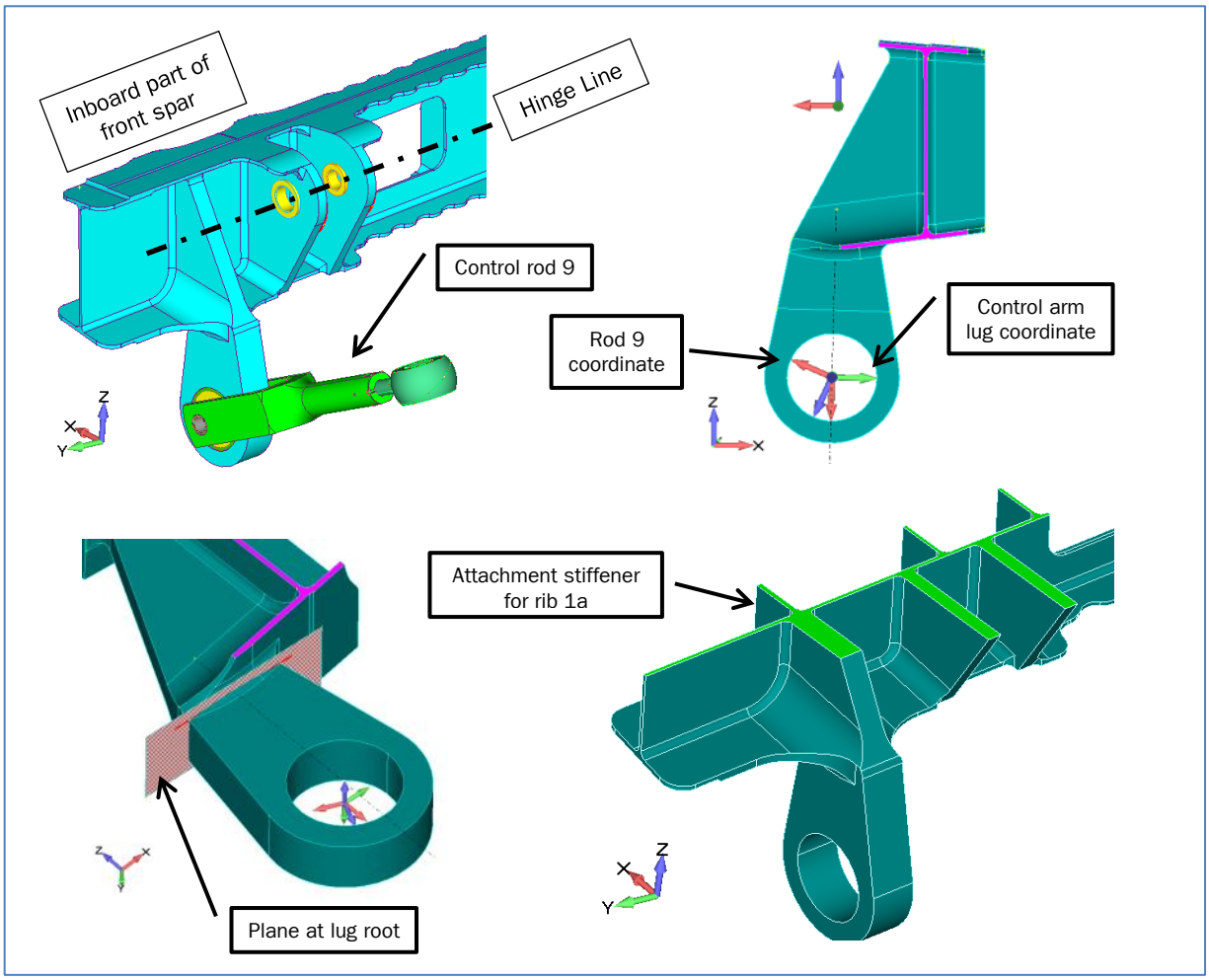

Figure 2-40 Front spar sections at front spar control arm (rod 9).

Applicable load cases for this zone of the spar are defined in Table 2-18
The following strength checks are made for the control arm (Figure 2-40).

- Lug strength (male lug) Set 2 loads
- Strength at the root of the “lug portion” of the control arm Set 1 loads

Table 2-52 gives geometric data pertinent to the strength checks of the control arm. Nomenclature used for lug data follows that used in PSM 5.3.44-4. For the root section see Figure 2-41.

Control Arm (rod9)				
Root Section		Hash CAroot	Units	Comments
a =	32.4		mm	Root section width
b =	16.7		mm	Root section thickness
L =	44.9		mm	Moment arm: rod 9 centre to root section plane
Lug		Hash CALug	Units	Comments
D =	31.75		mm	Lug:Bore diameter
DPO =	7.94		mm	Lug:Pin outer diameter
t =	16.66		mm	Lug: Uniform thickness
e =	23.81		mm	Lug: Bore center to end radius length
R =	23.81		mm	Lug: End radius or Lug radius
W/2 =	23.81		mm	Lug: "W" Lug effective width
phi =	0.00		mm	Lug: Lug taper angle
Di,bh =	7.94		mm	Lug: Bush Inner Diameter
Do,bh =	31.75		mm	Lug: Bush Outer Diameter
Bush Mat =	N/A			Lug: Bush material - bush is a bearing
Bush Mid =	N/A			Lug: Bush mat Id see Allowables sheet

Table 2-52 Geometric data for the control arm analysis.

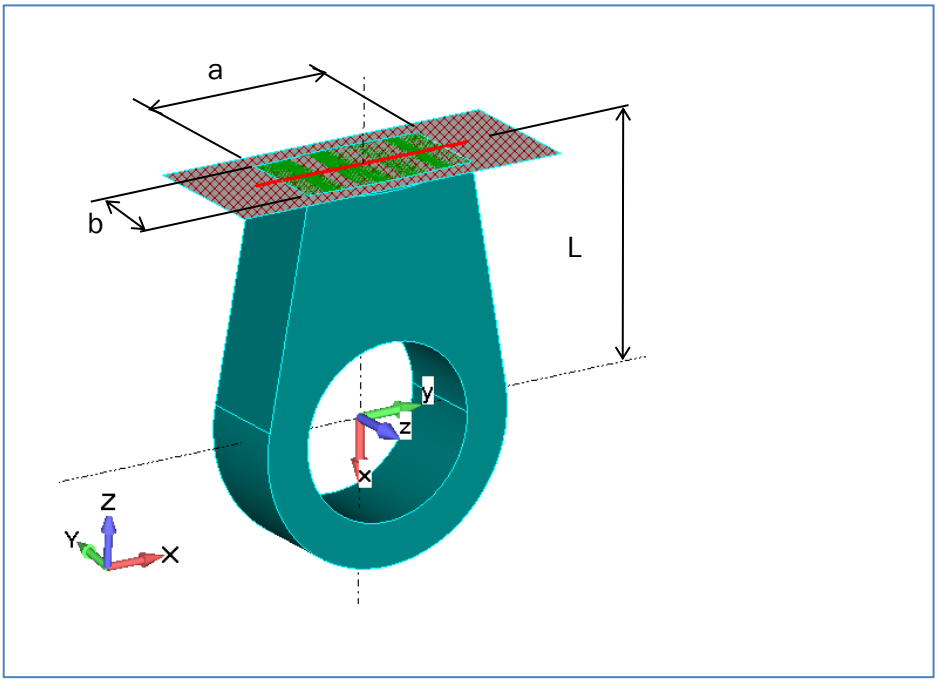

Figure 2-41 Front spar section at control arm root.

Load Extraction

Loading for the strength checks is extracted from the relevant FEM's via MPC forces at the control rod to spar interface grids see Figure 2-42.

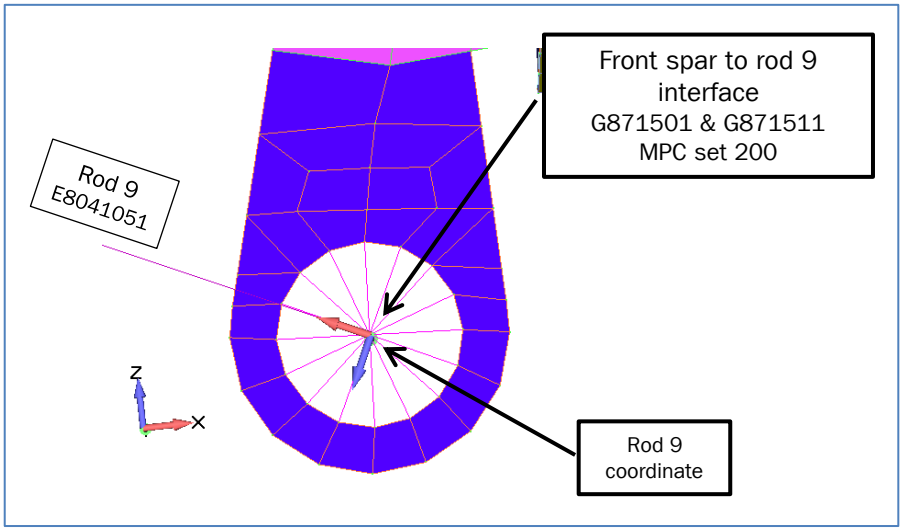

Figure 2-42 Mesh details at the front spar to rod 9 interface.

A FEMAP data table is used to transfer the MPC data to the calculation file [8] sheet: *Control Arm*
The menu sequence is as follows

List Output Results to Data Table

For forces aligned to rod 9 axis (C8041001)

In the "*Send Results to data Table", select* "C8041001"

For forces aligned to the control arm axis (C2710103)

In the "*Send Results to data Table", select* "C2710103"

On the next menu "*Results to Add to Data Table*"

Select appropriate load case and Multipoint Force components

The extracted forces presented in Table 2-53 are aligned as follows.

For rod 9 load (C8041001, Figure 2-42,): Fx is aligned with the rod axis

For the control arm lug (C2710103, Figure 2-41): Fx is aligned with lug axis
Fy is aligned with lug transverse
Fy is aligned with lug lateral

For the section at the root: The section plane is aligned with the lug YZ plane
i.e. Fy is aligned with the long edge
Fz is aligned with the short edge

The local coordinate systems C8041001 & C2710103 are defined in the "master" FEMAP FEM file [1]. They are linked to the hinge coordinate C2710001 and will ∴ translate and rotate as the aileron angular position changes.

DFEM	Load Case	MPC Forces [G871501,C8041001]				MPC Forces [G871501,C2710103]				DFEM Results are
		Fx	Fy	Fz	Fres	Fx	Fy	Fz	Fres	
		N.				N.				
10	**1081**	-3913	0	0	3913	2733	2790	247	3913	LL
20	**2001**	3996	0	0	3996	-2683	-2955	-199	3996	UL
30	**3002**	-6954	0	0	6954	2696	6410	-11	6954	UL
30	**3003**	5126	0	0	5126	-1987	-4725	8	5126	UL
30	**3053**	0	-5	0	5	0	0	5	5	UL
30	**3054**	10	0	9	13	4	-13	0	13	UL
30	**3084**	-5738	0	0	5738	2225	5289	-9	5738	LL
40	**4004**	-6937	1	-3	6937	2343	6530	2	6937	UL
50	**5005**	-5959	0	0	5959	1242	5827	93	5959	UL
60	**6086**	-9477	0	0	9477	1017	9416	348	9477	LL

Table 2-53 Control arm applied forces

Summary of RF's for the Control Arm

A summary of RF's for the applicable load cases and strength checks are given in Table 2-54. A worked example for the critical case follows.

Strength Check	RF (Aero + wing Bending) vs Load Case									
	1081	2001	3002	3003	3053	3054	3084	4004	5005	6086
Safety Factor	1.0	1.5	1.5	1.5	1.5	1.5	1.5	1.5	1.5	1.0
Bending- axial Stg, lug root	6.93	6.81	3.69	5.01	2615.33	1855.53	4.47	3.66	4.05	2.44
Shear Stg, lug root	42.83	40.51	18.71	25.39	24440.26	9469.66	22.68	18.37	20.58	12.73
Interaction, lug root	6.84	6.71	3.62	4.91	2600.48	1820.90	4.39	3.59	3.97	2.39
Lug Str	18.97	18.51	10.39	14.10	979221.08	5370.96	12.60	10.38	11.99	7.49

Table 2-54 Summary of reserve factors for the front spar control arm.

Critical case = 6086
Failure mode = Interaction Axial/Bending/Shear stg at lug root

RF = >2.00
RF includes a 1.15 fitting factor

Note: Conservatively a fitting factor has been applied to both the section strength (optional) and lug strength (required).

Worked Example

Critical load case 6086 all presented loads are ultimate.

Lug Strength

Excel lug analysis tool Lug Analysis PSM 5 3 11 4_01.xlsm has been embed into calculation file [8] The Excel is an approved for use on the PC24 program; no detailed worked example will be presented. However a summary of input data and resulting lug allowables is presented below to aid verification checks. A spherical bearing is used between the control arm lug and control rod 9, hence a bush bearing check is not applicable. Spherical bearing strength is document in section 2.5.15.3.1.

MPC Force Fx = Applied lug axial force.
MPC Force Fy = Applied lug transverse force.

Critical Load Case 6086

Safety Factor = 1.0

Results in Table 2-53 are from FCS limit loading. Therefore results can be used without further factoring.

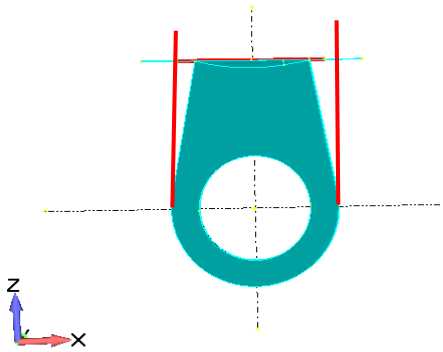

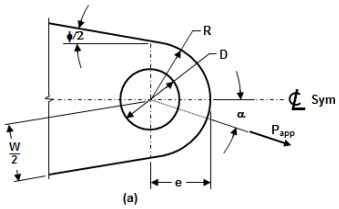

(a)
Standard Lug Geometry with "e = R"

Lug Geometry			Hinge (Lug) Material		
D =	31.75	mm	Mat = 2124-T851		
DPO =	7.94	mm	F_{tu} =	441.0	MPa
t =	16.66	mm	F_{ty} =	379.0	MPa
e =	23.81	mm			
R =	23.81	mm	F_{bry15} =	545.0	MPa
W/2 =	23.81	mm	F_{bry20} =	634.0	MPa
phi =	0.00	deg			
Bush Geometry			**Bush Material**		
Di,bh =	7.94	mm	Bush Mat =	No bush	
Do,bh =	31.75	mm	F_{cy} =	-	MPa

Loading*		Safety Factor = 1.00	
Active LC =	6086		
	Ult	**Limit**	
Axial Load P_{ax} =	1017	N/A N	Conservative, $[Paxial]_{abs}$ used
Transverse Load P_{tr} =	9416	N/A N	
Resultant Load P_{app} =	9471	N/A N	
alpha =	83.8	83.8 deg	

Stress Analysis and RF

Lug Analysis (Lug Analysis PSM 5 3 11 4_01)	**Applied** N.	**Allowable** N.		**RF**
Tension Strength Ult , P_{tu}	9471	81634	Lug	7.49
Limit Tension Strength Limit, P_{ty}	N/A	77173	Lug	N/A
Lug Net Section Limit Tension Strength, $P_{ty,ns}$	N/A	100237	Lug	N/A
Lug Limit Bearing Strength, P_{bry}	N/A	72070	Lug	N/A
Bush Bearing Strength Limit, P_{bry}			Bush	N/A
Minimum RF =		**Tension Strength Ult , Ptu**		**7.49**
			FF =	**1.15**

Strength at Lug Root

Critical section for the control arm is assumed to be immediately below the front spar lower cap intersects. See below and Figure 2-40.

The section is checked for axial, bending & shear strength.

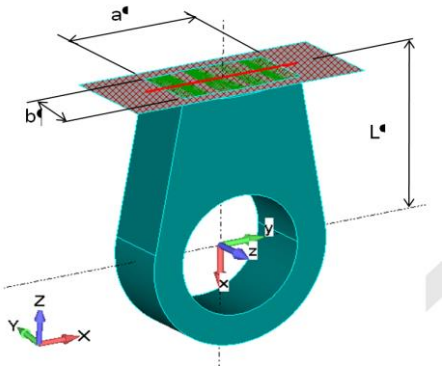

Geometry

a =	32.4	mm
b =	16.7	mm
L =	44.9	mm
A =	541	mm^2
Iyy =	12575	mm4
Izz =	47334	mm4

Bending & axial stress

From elastic engineering bending

$f_a = P_{axial}/A$

$f_{b,yy} = My^* (b/2)/Iyy$

$f_{b,zz} = Mz^* (a/2)/Izz$

Critical corner resultant

$f_{res} = abs(f_a) + abs(f_{b,yy}) + abs(f_{b,zz})$

Shear Bending Interaction PSM 5.3.8.2

Shear

Calculate average across section

$f_{su} = ([P_{shear(P1)}]^2+[P_{shear(P2)}]^2)^{0.5}/A$

<u>Applied Load</u>

<u>Critical Load Case 6086</u>

Safety Factor = 1.0

Results in Table 2-53 are from FCS limit loading. Therefore results can be used without further factoring.

Transfer loading from the rod interface to the root plane.

Interface MPC Loading	Lug root			
Fx = 1017 N.	P_{axial} =Fx			P_{axial} = 1017. N.
Fy = 9416. N.	$P_{s(P1)}$ = Fy			$P_{s(P1)}$ = 9416.. N.
Fz = 348. N.	$P_{s(P2)}$ = Fz			$P_{s(P2)}$ = 348. N.
	P_{shear} = resultant from P1 & P2			P_{shear} = 9422.. N.
My = 0.0 N.	My'= Fz*L	348.*44.9	My'	= 15616. N. mm
Mz = 0.0 N.	Mz'= Fy*L	9416..*44.9		Mz' = 422774. N. mm

<u>Stress Levels: Axial & Bending</u>

f_a	$= P_{axial}/A$	f_a	= 1017./541	f_a	= 1.9 MPa
$f_{b,yy}$	= My* (b/2)/Iyy	$f_{b,yy}$	= 15616*(16.7/2)/12575	$f_{b,yy}$	= 10.4 MPa
$f_{b,zz}$	= Mz* (a/2)/Izz	$f_{b,zz}$	= 422773*(32.4/2)/47334	$f_{b,zz}$	= 144.7 MPa

Critical corner resultant

$f_{res} = abs(f_a) + abs(f_{b,yy}) + abs(f_{b,zz})$ f_{res} = 1.9+10.4+144.7 f_{res} = 157.0 MPa

Allowable = Ftu = 441.0[17] MPa

RF = 441.0/(1.15*157.) = 2.44

RF = >2.00
1.15 FF included
No plastic bending

[17] Front spar is a class 2 part with single load paths, hence A basis is applicable

Stress Levels: Shear

Calculate shear stress as average across section

$f_{su} = P_{shear}/A$ $f_{su} = 9422./541$ $f_{su} = 17.4$ MPa

Allowable = Fsu = 255.0[18] MPa

RF = 255.0/(1.15*17.4) **RF = >2.00**

1.15 FF included

Interaction: Shear – Bending - Axial

PSM 5.3.11.4-01 Eq. 56 RF = **RF = >2.00**

1.15 FF included

No plastic bending

[18] Front spar is a class 2 part with single load paths, hence A basis is applicable

2.5.7 Front Spar Hinge Fittings

This section deals with the aileron discrete front spar hinge fittings. The front spar supports three hinge points, two of which are discrete fittings see Figure 2-43.
The mid hinge is semi floating, it can only react loads normal to the aileron body. The outboard bracket provides a hinge point but is allowed to float axially.

Loading for the fittings is primarily from aerodynamic loads acting on the aileron surfaces. Superimposed on aerodynamic forces are loads resulting from wing bending; the use of three support brackets, forces the aileron to conform to wing box deformations.
Full details of hinge line interface loads and their derivation can be found in report ref [13].
The strength analysis of the fittings is based on a FE approach using a solid (CTET10) element models. The mid fitting model is designated FEM [8] and the outboard FEM [9]. Both models use CBUSH elements to represent fitting to front spar fasteners. A brief overview of each model is given in section 2.4.4.

To improve accuracy of recovering surface stress levels the CTET10 elements are “skinned” with CTRIA6 element[19]

Fitting static strength is evaluated using following checks:

- Bracket body section stress levels (from a CTET FEM results)
- Bracket global buckling use a FE linear eigen approach.
- Bracket lug strength at hinge positions.
- Support bracket to aileron hinge, pin strength.
- Joint to rear spar fasteners, shear and bearing strength (bracket side of joint only)

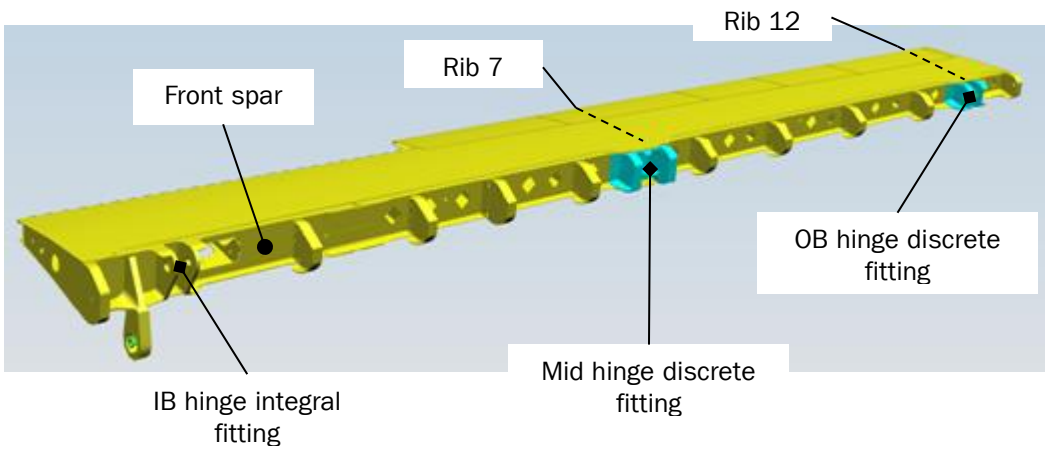

Figure 2-43 Front spar discrete hinge fittings.

[19] For DOF consistence with the CTETs, the skin elements are set as membranes.

2.5.7.1 Calculation File, Geometry and Materials

The table below provides an overview of analysis data.

Part	Part	Calculation Files			Material
		Id	Geometry	FEM	
Front Spar (IB)	557.60.24.397/98	12	Table 6-22	8	2124 T851 plate, B basis
Front Spar (OB)	557.60.24.315/16				

Table 2-55 Hinge fittings, overview of calculation files, geometry and materials

2.5.7.2 Load Case Applicability

The complete set of aileron installation load cases is given Table 2-12. The sub set of loading applicable to the front spar hinge fittings is given in Table 2-56.

Load Case Applicability Table for Aileron Box						
Angle [°]	-25	-22	0	3	10	15
DFEM	10	20	30	40	50	60
Applicable Load Case Id's.	Aerodynamic + Wing Bending					
		2001	3002 3003	4004	5005	
	Flight Control System					
	None					
	Inertia					
			3053 3054			

Table 2-56 Applicable load cases front spar hinge fittings

2.5.7.3 Mid Hinge Fitting

This section provides static strength substantiation for the aileron mid front spar hinge fitting. A simple overview of the fitting and aileron box arrangement is shown in Figure 2-44 (below).

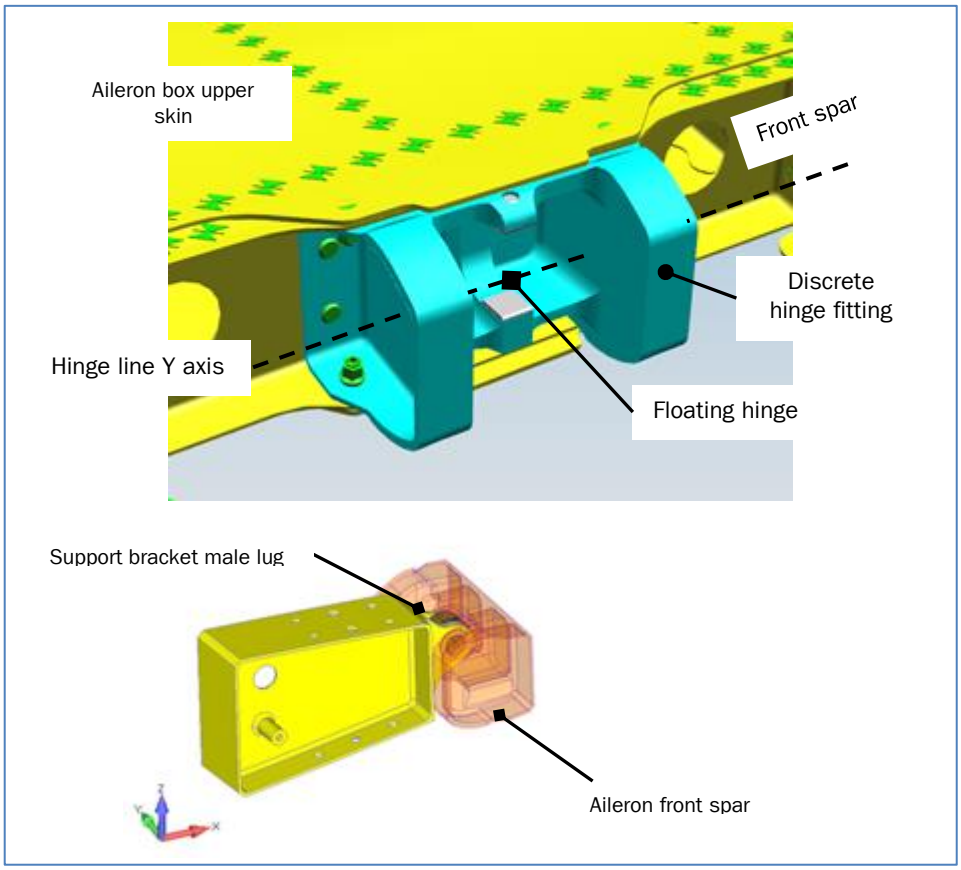

Figure 2-44 Mid front spar hinge fitting.

2.5.7.3.1 Mid Fitting Body Section Stress Levels

Fitting body stress levels have been determined using a linear FE approach. A brief overview of the FEM [8] is given in section 2.4.4.
For the purposes of determining section/flange strength RF's the FEM is divided into three zones (FEMAP groups) see Figure 2-45.

Central Zone	RF's for:	
	Surface stress (CTRIA)	max principal vs Ftu
	Surface stress (CTRIA)	min principal vs. Ftu
	Section centre stress (CTET)	max principal vs Ftu
	Section centre stress (CTET)	min principal vs. Ftu
Outer Flanges Zone	RF's for:	
	Surface stress (TRIA)	max principal vs Ftu
	Surface stress (TRIA)	min principal vs. Fcy
	Flange/web centre stress (CTET)	max principal vs Ftu
	Flange/web centre stress (CTET)	min principal vs. Fcc
Fastener hole zones	RF's for:	
	Zone covered by joint analysis (section 2.5.7.3.3)	

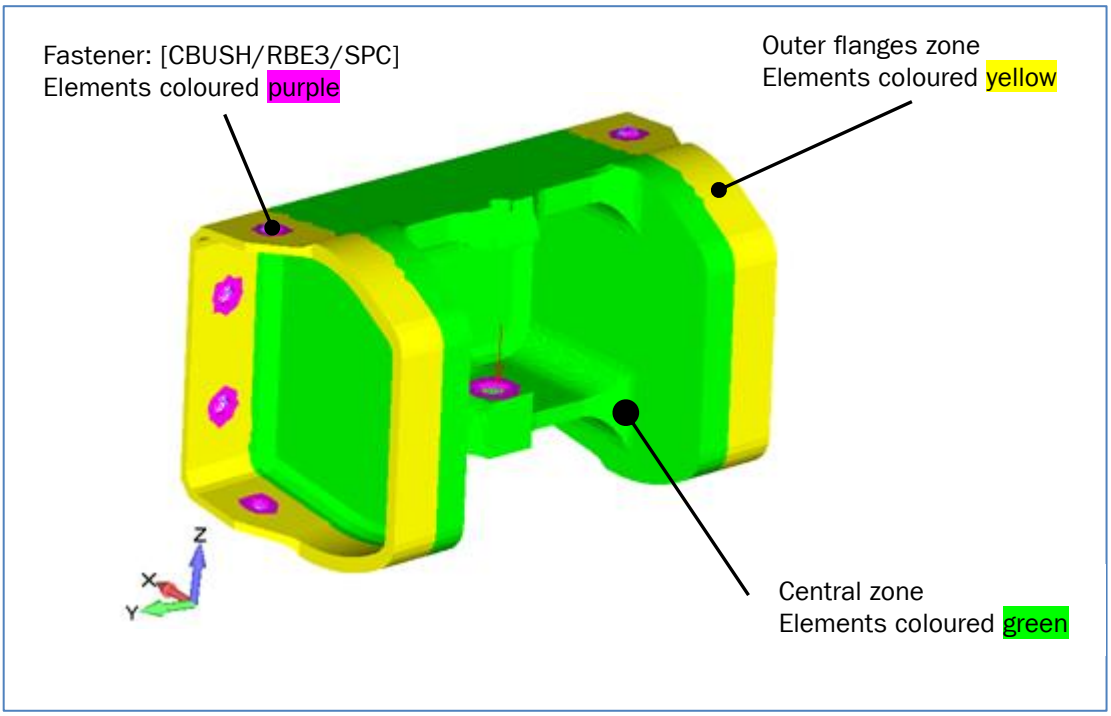

Figure 2-45 Front spar mid hinge fitting FEM "stress" zones.

Tension Allowable

All applied tension stresses are compared against Ftu.

Ftu = 469 MPa 2124-T851 B basis

Compression Allowable

The allowable for compression stresses is dependent on the location within the fitting and if the location can be considered as a compact section. The fitting FEM has been divided into two groups/zones.

A central zone, where all sections can be considered as "compact".
An outer flanges zone, where the compression allowable must account for local flange buckling.

For the central zone all sections are considered as "compact section", hence Ftu can be used as the compression allowable.

For the outer flanges zone, "b/t" values have been considered.

The maximum "b/t" = 19.3/1.5 12.9 mm (Spar web attachment flange)

b/t > 7.0[20], therefore the flanges cannot be considered as compact sections. A compression allowable based on crippling has been employed. In calculating the compression allowable no benefit has been taken from attached skins and webs.
As this allowable is applicable to an average thru the thickness stress, a dual strategy is employed to cover local buckling without being overly conservative at localised surface compression stress.

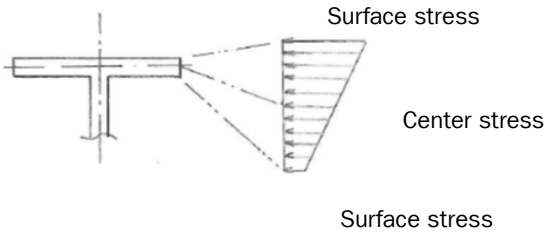

All surface stresses are considered as localized/compact and are compared againt Ftu. off is employed.
All solid element centre stresses use a single local buckling allowable base on the flange with the worst b/t value.

Local Buckling Compression Allowable

The local buckling allowable is based on flange crippling and follows the method given in PSM 5.3.4.3-01.

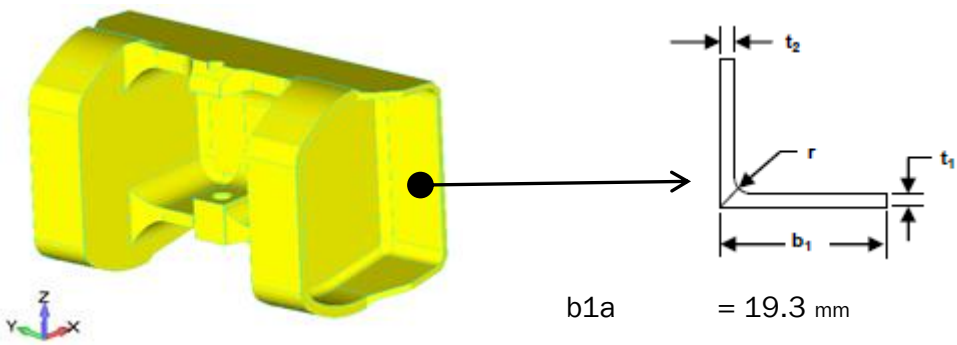

b1a = 19.3 mm

[20] Ref. PSM 5.34.3.1, Introduction

t1	= 1.5 mm	
r	= 2.5 mm	
b1a.eff	= 19.3 mm	(no reduction due t2 used)
Ki	= 0.41	(simple supports)

$x_i = \frac{b}{t}\sqrt{\frac{F}{K_i E}}$ =(19.3/1.5)*SQRT(407/(0.41*75200)) = 1.48 Eq. 5.3.4.3-2

$y_i = \frac{0.78}{x_i}$

= 0.78/1.48 = 0.528

$F_{cc,I} = y_i * Fcy$ = 0.528*407. = 214.7 MPa Eq. 5.3.4.3-1

Fcc =214.7 MPa

To supplement the above rational a FE linear buckling analysis has been performed on one critical load case; results are presented in section 2.5.7.3.2.

Ultimate Strength Summary Tables

M/C Body Central Zone (Surface Elements) Stress Levels											
Loading		Maximum Principal					Minimum Principal				
Group	Case	Output Vector	Applied MPa	Allow Type	Allow MPa	RF	Output Vector	Applied MPa	Allow Type	Allow MPa	RF
ED + Aero	2001	7026	64.5	Ftu	462	7.16	7027	-111.6	Ftu	462	4.14
	3002	7026	300.2	Ftu	462	1.54	7027	-440.3	Ftu	462	1.05
	3003	7026	169.1	Ftu	462	2.73	7027	-292.5	Ftu	462	1.58
	4004	7026	267.1	Ftu	462	1.73	7027	-391.8	Ftu	462	1.18
	5005	7026	287.1	Ftu	462	1.61	7027	-421.0	Ftu	462	1.10
Inertia	3053	7026	3.7	Ftu	462	124.96	7027	-5.4	Ftu	462	85.20
	3054	7026	5.6	Ftu	462	83.11	7027	-9.6	Ftu	462	48.05

Table 2-57 Summary of RF's for mid fitting central zone, surface element stress levels

Critical case: 3002
Applied stress: -440.3 MPs
Allowable: 462.0 MPa compact section Fcu = Ftu
Location: see Figure 2-46
Comment Critical stress is associated with thru. the thickness bending.

Critical RF = 1.05

Localized bending stress; no beneficial plasticity effects used.

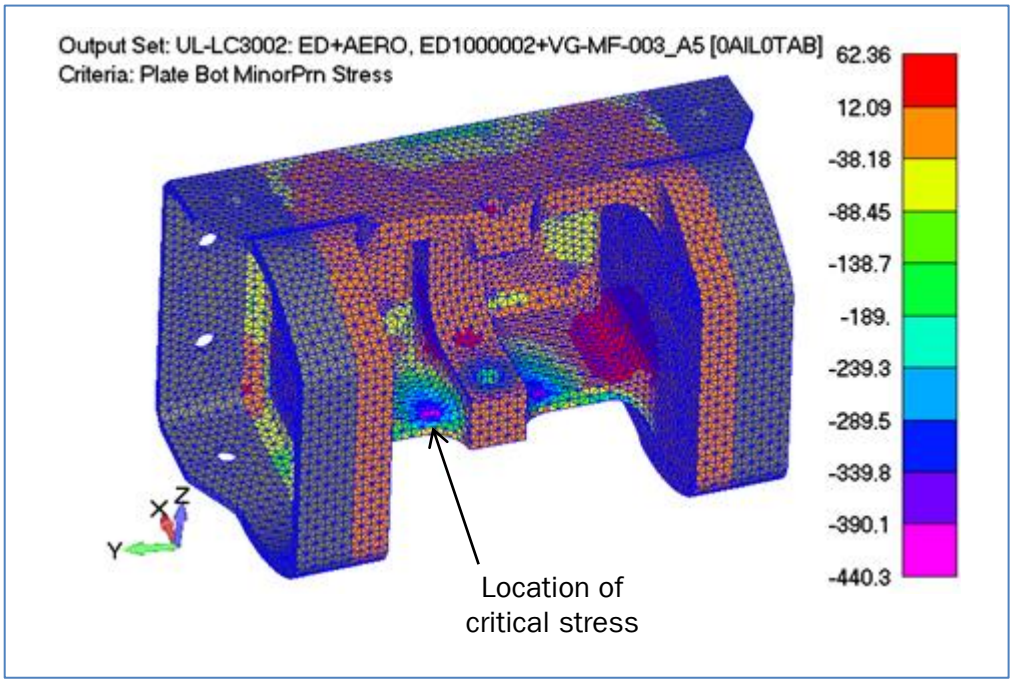

Figure 2-46 Mid fitting central zone, surface ultimate stress levels: minor principal stress.

M/C Body Central Zone (Element Centre) Stress Levels											
Loading		Maximum Principal					Minimum Principal				
Group	Case	Output Vector	Applied MPa	Allow Type	Allow MPa	RF	Output Vector	Applied MPa	Allow Type	Allow MPa	RF
ED + Aero	2001	60031	81.8	Ftu	462	5.65	60017	-98.2	Ftu	462	4.71
	3002	60031	381.9	Ftu	462	1.21	60017	-394.6	Ftu	462	1.17
	3003	60031	214.5	Ftu	462	2.15	60017	-257.4	Ftu	462	1.79
	4004	60031	339.8	Ftu	462	1.36	60017	-351.1	Ftu	462	1.32
	5005	60031	365.1	Ftu	462	1.27	60017	-377.2	Ftu	462	1.22
Inertia	3053	60031	4.7	Ftu	462	98.24	60017	-4.9	Ftu	462	95.09
	3054	60031	7.1	Ftu	462	65.51	60017	-8.5	Ftu	462	54.60

Table 2-58 Summary of RF's for mid fitting central zone, solid element centre stress levels

Applied stress	-394.6 MPa	
Allowable	462.0 MPa	compact section Fcu = Ftu
Critical case:	3002	
Location:	see Figure 2-47	
Comment	Critical stress is associated with thru. the thickness bending.	

Critical RF = 1.17

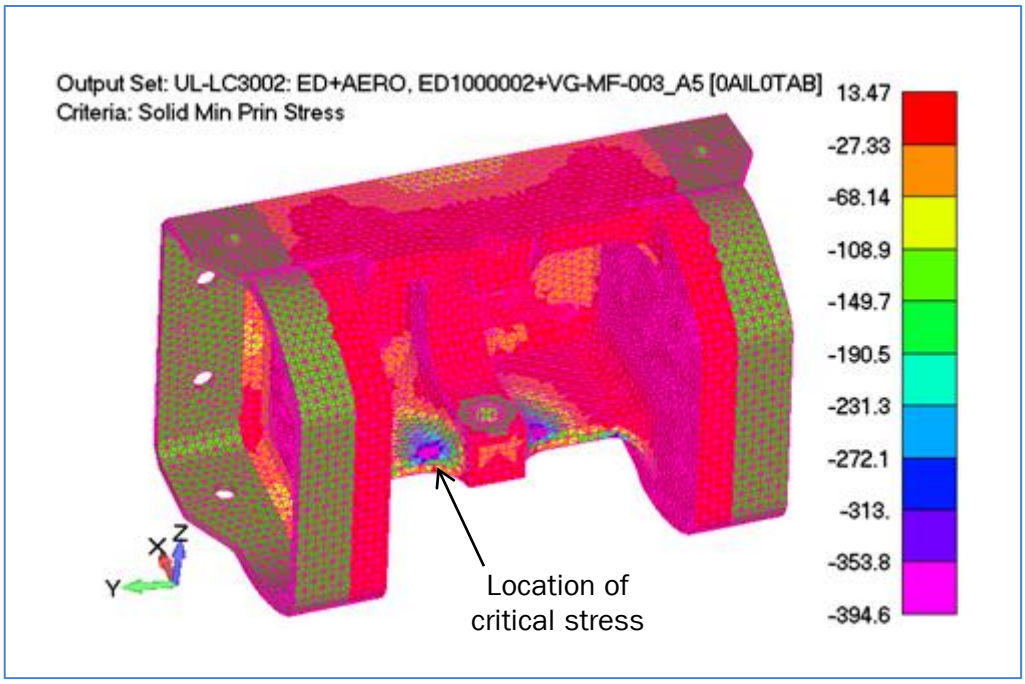

Figure 2-47 Mid fitting central zone, solid element centre stress levels: min principal stress

M/C Body Outer Flange Zone (Surface Element) Stress Levels											
Loading		Maximum Principal					Minimum Principal				
Group	Case	Output Vector	Applied MPa	Allow Type	Allow MPa	RF	Output Vector	Applied MPa	Allow Type	Allow MPa	RF
ED + Aero	2001	7026	21.9	Ftu	462	21.06	7027	-25.0	Fcy	407	16.26
	3002	7026	153.2	Ftu	462	3.02	7027	-159.5	Fcy	407	2.55
	3003	7026	57.5	Ftu	462	8.03	7027	-65.6	Fcy	407	6.20
	4004	7026	136.3	Ftu	462	3.39	7027	-141.9	Fcy	407	2.87
	5005	7026	146.5	Ftu	462	3.15	7027	-152.5	Fcy	407	2.67
Inertia	3053	7026	1.9	Ftu	462	244.87	7027	-2.0	Fcy	407	207.26
	3054	7026	1.9	Ftu	462	244.28	7027	-2.2	Fcy	407	188.61

Table 2-59 Summary of RF's for mid fitting outer flange zone, surface element stress levels.

Applied stress: -159.5 MPa
Allowable: 407.0 MPa use compression cut-off at Fcy
Critical case: 3002
Location: see Figure 2-48
Comment Conservative. Ftu could be used; min stress is not associated with buckling.

Critical RF = >2.0

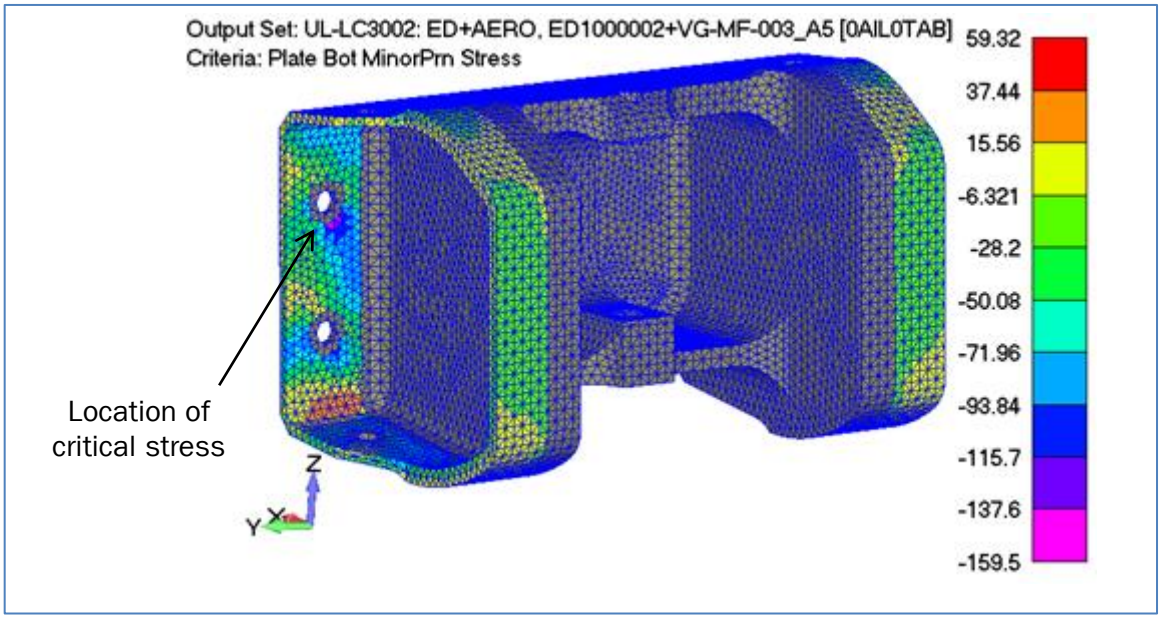

Figure 2-48 Mid fitting outer flange zone, surface element ultimate stress levels: minor principal stress.

M/C Body Outer Flange Zone (Element Centre) Stress Levels											
Loading		Maximum Principal					Minimum Principal				
Group	Case	Output Vector	Applied MPa	Allow Type	Allow MPa	RF	Output Vector	Applied MPa	Allow Type	Allow MPa	RF
ED + Aero	2001	60031	22.3	Ftu	462	20.73	60017	-21.2	Fcc	215	10.11
	3002	60031	149.9	Ftu	462	3.08	60017	-111.2	Fcc	215	1.93
	3003	60031	58.4	Ftu	462	7.91	60017	-55.7	Fcc	215	3.86
	4004	60031	133.4	Ftu	462	3.46	60017	-99.0	Fcc	215	2.17
	5005	60031	143.3	Ftu	462	3.22	60017	-106.4	Fcc	215	2.02
Inertia	3053	60031	1.8	Ftu	462	250.33	60017	-1.4	Fcc	215	156.77
	3054	60031	1.9	Ftu	462	240.54	60017	-1.8	Fcc	215	117.29

Table 2-60 Summary of RF's for mid fitting outer flange zone, solid element centre stress levels

Critical case: 3002
Applied stress: -111.2 MPa
Allowable: 215.0 MPa crippling allow from max b/t flange
Location: see Figure 2-48
Comment Conservative, min stress is not associated with a free edge.

Critical RF = 1.93

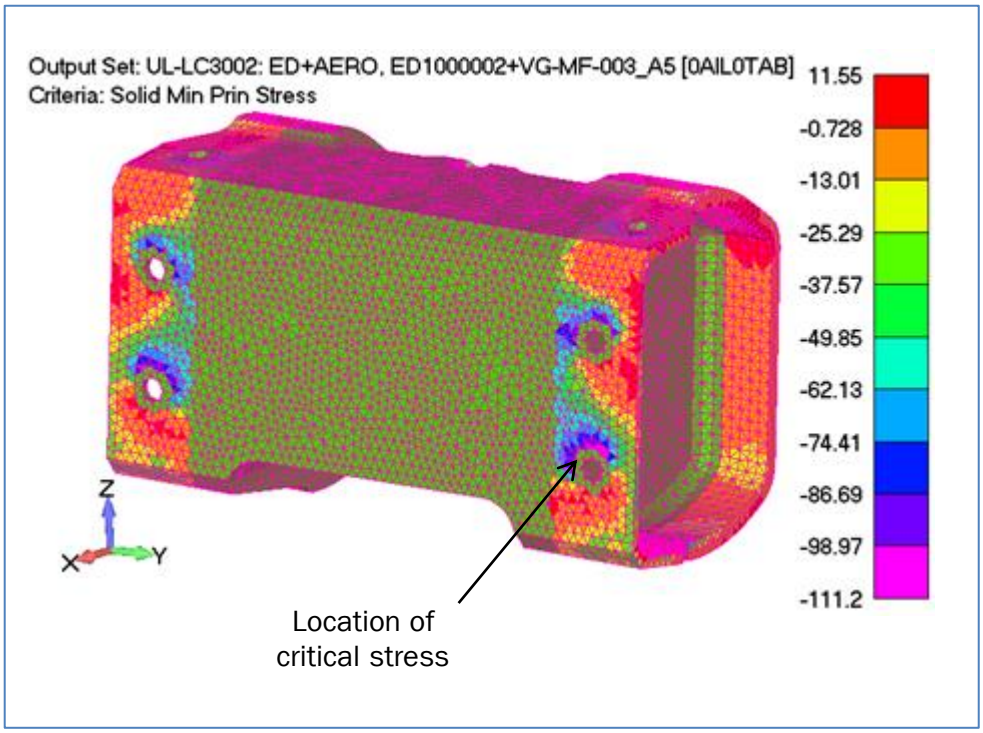

Figure 2-49 Mid fitting outer flange zone, flange centre ultimate stress levels: min principal stress.

2.5.7.3.2 Mid Fitting Body FE Linear Buckling Check

In addition to checking section compression stress levels against a local flange crippling allowable a FE linear buckling analysis has been performed. Boundary conditions and loading are as the static strength checks. I.e. extracted eigenvalues are relative to ultimate loads. From inspection of Table 2-59, one critical load case has been identified.
A summary is presented below and the mode shape in Figure 2-51

Buckling criteria: No buckling at < Ultimate Loads

FEM[8] is primarily intended for static strength analysis. Mesh density combined with the use of CTET10 elements will result in over estimation of buckling eigenvalues. The analysis should be considered as a supplement/"safety check" of the local buckling allowable used in the previous section.

Load Case		Eigenvalue	RF
LC3002	ED1000002+VG-MF-003_A5 [0ail0tab]	28.6	>2.00

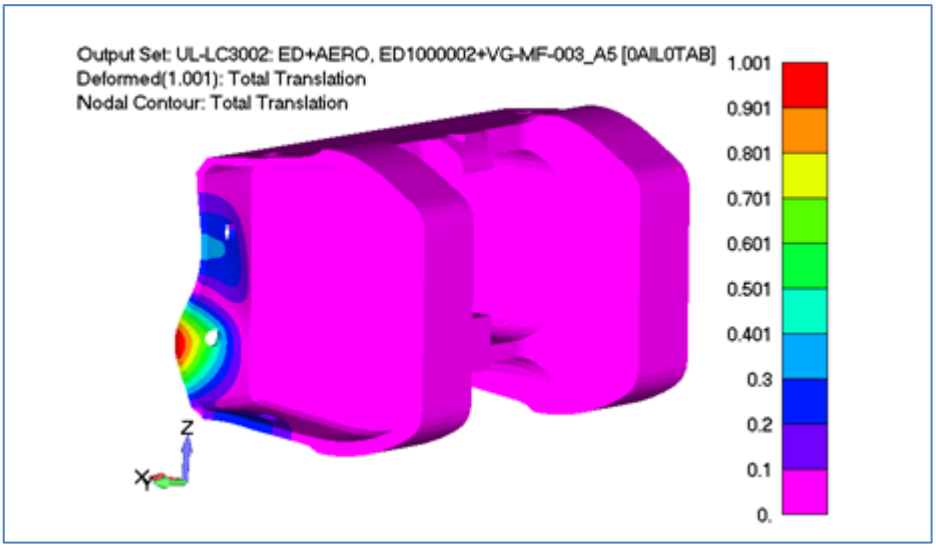

Figure 2-50 Fitting body linear buckling 1st mode, critical ED + Aero case 3002

2.5.7.3.3 Mid Hinge Fitting to Front Spar Joint

The joint to the aileron box is represented in FEM [8] by CBUSH fasteners (see Figure 2-13).
An overview of the joint arrangement is given in Figure 2-51.
Fastener strength data has been taken from ref. [4]. For skin/flange thickness values which do not match standard sheet values, simple linear interpolation has been used. Joint fastener details and allowables are presented in Table 2-61. A summary of joint RF's is presented in Table 2-62.

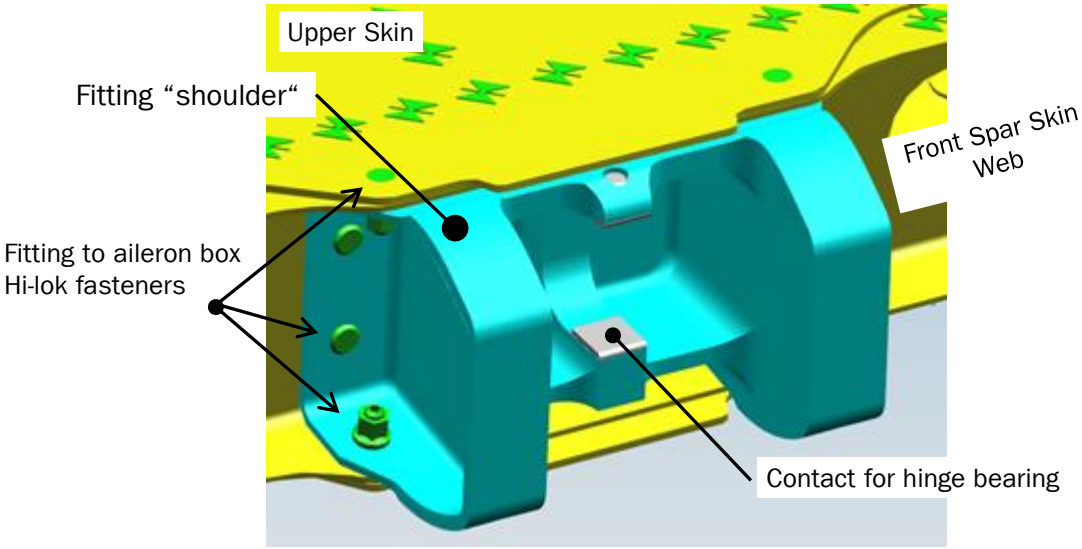

Each fitting shoulder is attached to the aileron box via:
Upper skin 1 x HSTB411 - 4.0 mm, C'sk Hi-Lok
F spar web 4 x HSTB410 - 4.0 mm, Pro'd Hi-Lok
Lower skin 1 x HSTB411 - 4.0 mm, C'sk Hi-Lok

Figure 2-51 Hinge fitting to front spar joint details.

Joint Allowables

							Ultimate Allowables						
		Fastener Details				Shear	Bracket Bearing			Spar or Skin Bearing			
Allow Id	Part	Type	Dash	Dia mm	No.	Allow N.	t mm	Mat_{brk}	/Fastener N.	t_s mm	Mat_s	/Fastener N.	Mode
A	Upper Skin	HSTB411	5	4.00	2	8920	1.6	2124-T851	4770	1.6	2024-T3	4770	Bearing
B	Front Spar Web	HSTB410	5	4.00	4	8920	1.5	2124-T851	5020	1.0	2124-T851	3480	Bearing
C	Lower Skin	HSTB411	5	4.00	2	8920	1.7	2124-T851	5135	1.6	2024-T3	4770	Bearing

Table 2-61 Mid hinge fitting, summary of fastener allowables

Joint Loading and RF's

Fastener loading has been extracted from FEM [8]. Each fastener is represented by a CBUSH. Element orientation is such that CBUSH X & Y forces are "shear" & Z forces axial.
Due to flexibility of the fitting backup structure[21], joint loads are assumed to be transferred by fastener shear alone. This assumption is enforced in FEM [8] by using PBUSH axial stiffness of the 10. N./ mm.

Load Case	Joint	CBUSH Id	Applied		Allowable					RF
			Shear	Axial	Id	Fastener	Brg_{fit}	$Brg_{sk/sp}$	Mode	
			N.			N.				
LC2001	Upper Skin	1	217.3	0.18	A	8920	4770	4770	Bearing	**19.08**
		2	223.8	0.18	A	8920	4770	4770	Bearing	**18.53**
	Front Spar Web	3	205.9	0.02	B	8920	5020	3480	Bearing	**14.69**
		4	219.4	0.02	B	8920	5020	3480	Bearing	**13.78**
		5	207.7	-0.05	B	8920	5020	3480	Bearing	**14.56**
		6	223.7	-0.06	B	8920	5020	3480	Bearing	**13.52**
	Lower Skin	7	208.5	-0.23	C	8920	5135	4770	Bearing	**19.89**
		8	222.5	-0.24	C	8920	5135	4770	Bearing	**18.64**
LC3002	Upper Skin	1	1470.8	-1.48	A	8920	4770	4770	Bearing	**2.82**
		2	1550.6	-1.56	A	8920	4770	4770	Bearing	**2.67**
	Front Spar Web	3	1451.3	-0.23	B	8920	5020	3480	Bearing	**2.08**
		4	1550.3	-0.22	B	8920	5020	3480	Bearing	**1.95**
		5	1455.3	0.27	B	8920	5020	3480	Bearing	**2.07**
		6	1562.6	0.31	B	8920	5020	3480	Bearing	**1.93**
	Lower Skin	7	1500.7	1.56	C	8920	5135	4770	Bearing	**2.76**
		8	1633.3	1.66	C	8920	5135	4770	Bearing	**2.53**
LC3003	Upper Skin	1	569.8	0.47	A	8920	4770	4770	Bearing	**7.27**
		2	586.8	0.48	A	8920	4770	4770	Bearing	**7.06**
	Front Spar Web	3	540.0	0.06	B	8920	5020	3480	Bearing	**5.60**
		4	575.4	0.05	B	8920	5020	3480	Bearing	**5.25**
		5	544.6	-0.13	B	8920	5020	3480	Bearing	**5.55**
		6	586.5	-0.15	B	8920	5020	3480	Bearing	**5.15**
	Lower Skin	7	546.8	-0.60	C	8920	5135	4770	Bearing	**7.58**
		8	583.5	-0.63	C	8920	5135	4770	Bearing	**7.10**
LC3053	Upper Skin	1	18.1	-0.02	A	8920	4770	4770	Bearing	**229.03**
		2	19.1	-0.02	A	8920	4770	4770	Bearing	**217.23**
	Front Spar Web	3	17.9	0.00	B	8920	5020	3480	Bearing	**169.33**
		4	19.1	0.00	B	8920	5020	3480	Bearing	**158.52**
		5	17.9	0.00	B	8920	5020	3480	Bearing	**168.86**
		6	19.2	0.00	B	8920	5020	3480	Bearing	**157.27**
	Lower Skin	7	18.5	0.02	C	8920	5135	4770	Bearing	**224.46**
		8	20.1	0.02	C	8920	5135	4770	Bearing	**206.23**
LC3054	Upper Skin	1	18.7	0.02	A	8920	4770	4770	Bearing	**221.47**
		2	19.3	0.02	A	8920	4770	4770	Bearing	**215.04**
	Front Spar Web	3	17.8	0.00	B	8920	5020	3480	Bearing	**170.47**
		4	18.9	0.00	B	8920	5020	3480	Bearing	**159.97**
		5	17.9	0.00	B	8920	5020	3480	Bearing	**169.03**
		6	19.3	-0.01	B	8920	5020	3480	Bearing	**156.95**
	Lower Skin	7	18.0	-0.02	C	8920	5135	4770	Bearing	**230.76**
		8	19.2	-0.02	C	8920	5135	4770	Bearing	**216.27**
LC4004	Upper Skin	1	1308.6	-1.32	A	8920	4770	4770	Bearing	**3.16**
		2	1379.6	-1.39	A	8920	4770	4770	Bearing	**3.00**
	Front Spar Web	3	1291.3	-0.20	B	8920	5020	3480	Bearing	**2.34**
		4	1379.4	-0.19	B	8920	5020	3480	Bearing	**2.19**
		5	1294.9	0.24	B	8920	5020	3480	Bearing	**2.33**
		6	1390.3	0.28	B	8920	5020	3480	Bearing	**2.17**
	Lower Skin	7	1335.2	1.38	C	8920	5135	4770	Bearing	**3.10**
		8	1453.2	1.48	C	8920	5135	4770	Bearing	**2.85**

Table 2-62 Mid hinge fitting, fastener (CBUSH) loading and RF's

Critical load case is: LC3002
Critical joint element fitting to front spar web (CBUSH 6)
Critical **RF = 1.93**
RF includes a 1.15 fitting factor

[21] The stiffness of the backup structure is not modelled in FEM [8].

Example calculation for critical load case/fastener
Critical load case: 3002
Fastener loads for CBUSH Id.6 (front spar, inboard fastener)

Ultimate shear resultant force	= 1562.6 N.	(Table 2-62)
Ultimate axial force	= 0.31 N.	negligible

Fastener details for the skin/flange

Fastener HSTB411 Hi-Lok, Dia.	= 4.0mm, C'sk head.
Fastener shear allow.	= 8920. N.
Bearing in hinge fitting	= 5020. N.
Bearing in front spar	= 3480. N.

Joint allow is minimum of shear and bearing = 3480. N.

RF = Allowable/(FF*Applied) =3480/(1.15*1562.6) **RF = 1.93**

RF includes a Fitting Factor of 1.15

2.5.7.4 Outboard Hinge Fitting

This section provides static strength substantiation for the aileron outboard front spar hinge fitting. A simple overview of the fitting and aileron box arrangement is shown in Figure 2-52 (below) and Figure 2-43.

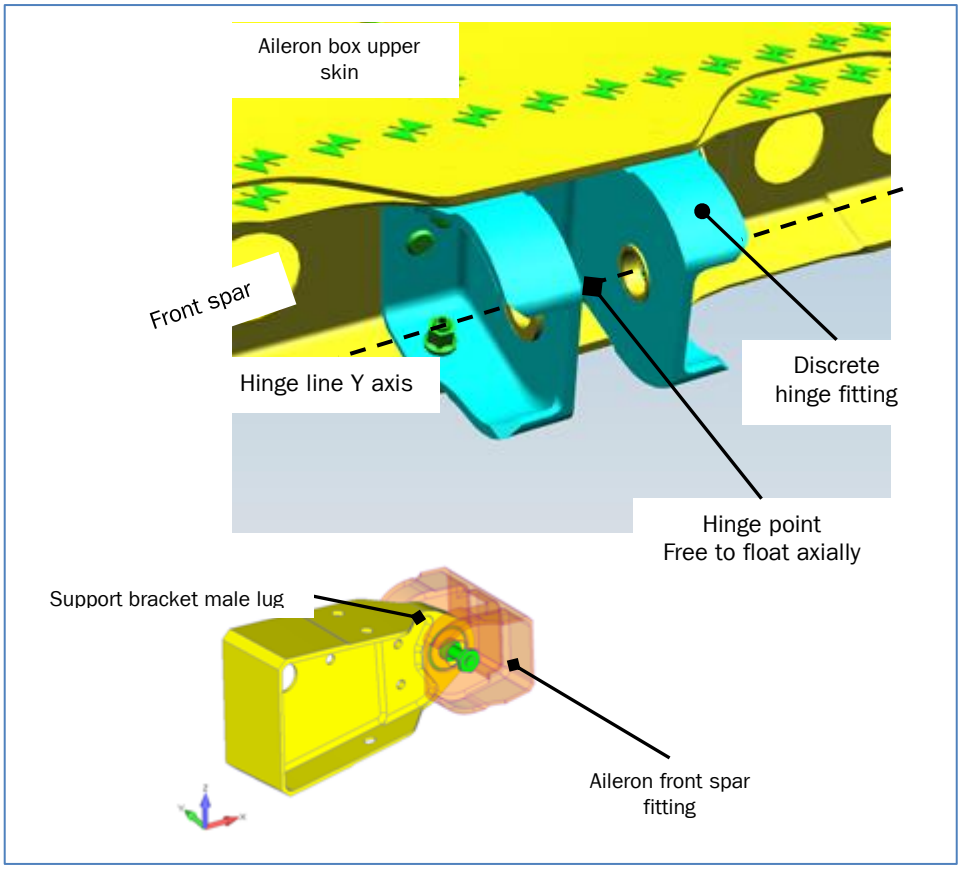

Figure 2-52 Outboard front spar hinge fitting.

2.5.7.4.1 OB Hinge Fitting Body Section Stress Levels

Fitting body stress levels have been determined using a linear FE approach. A brief overview of the FEM [9] is given in section 2.4.4.
For the purposes of determining section/flange strength RF's the FEM is divided into two zones[22] (FEMAP groups) see Figure 2-53.

Plain sections Zone	RF's for:	
	Surface stress (CTRIA)	max principal vs Ftu
	Surface stress (CTRIA)	min principal vs. Ftu
	Section centre stress (CTET)	max principal vs Ftu
	Section centre stress (CTET)	min principal vs. Fcc
Fastener hole zones	RF's for:	
	Zone covered by joint analysis (section 2.5.7.4.4).	

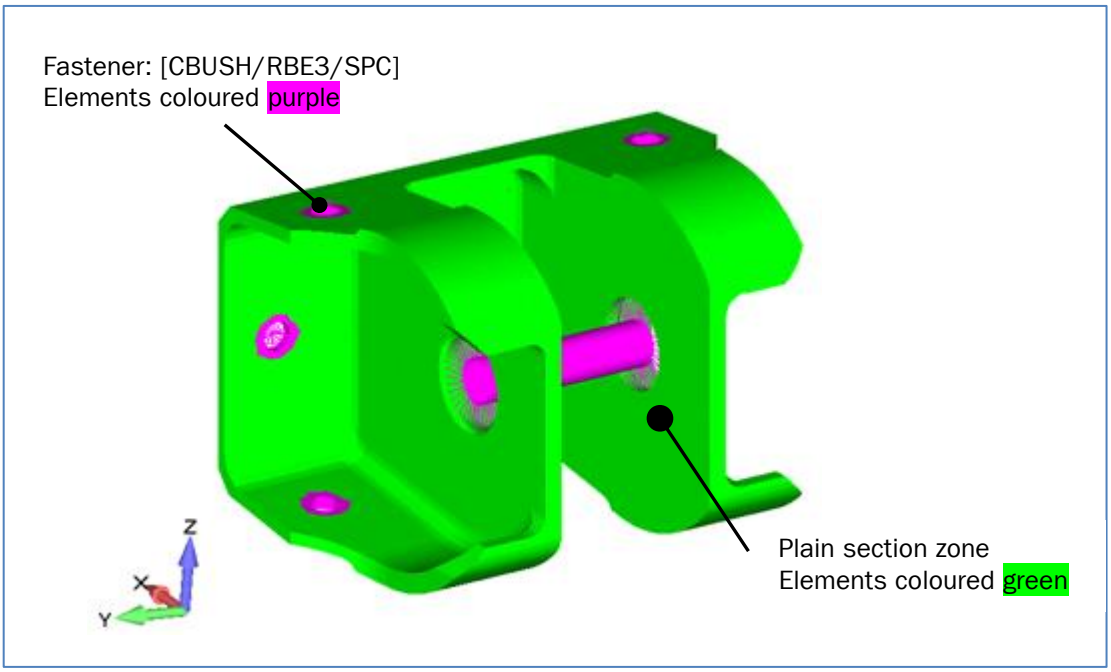

Figure 2-53 Front spar outboard hinge fitting FEM "stress" zones.

[22] The mid hinge is divided into a "compact sections" zone and a "flange" zone. For the outer fitting a single "flange" zone is utilized.

Tension Allowable
All applied tension stresses are compared against Ftu.

Ftu = 469 MPa 2124-T851 B basis

Compression Allowable
The allowable for compression stresses is dependent on the location within the bracket and if the location can be considered as a compact section. For the outer flanges zone, “b/t” values have been considered.

The maximum “b/t” = 21.0/1.5 14.0 (Spar web attachment flange)

Ratio b/t > 7.0[23], therefore the flanges cannot be considered as compact sections. A compression allowable based on crippling has been employed. In calculating the compression allowable no benefit has been taken from attached skins and webs.
As this allowable is applicable to an average thru the thickness stress, a dual strategy is employed to cover local buckling without being overly conservative at localised surface compression zones.

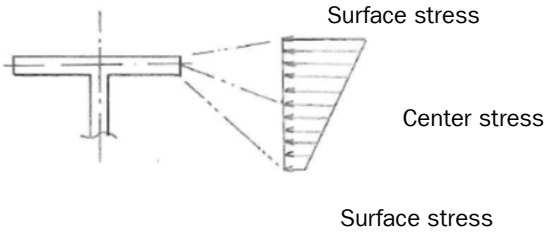

All surface stresses are considered as localized/compact and compared against Ftu
All flange/web centres use a single local buckling allowable base on the worst b/t value.

[23] Ref. PSM 5.34.3.1, Introduction

Local Buckling Compression Allowable

The bracket sections are assumed to be subject to uniform compression stresses. The local buckling allowable will be based on flange crippling, ref. PSM 5.3.4.3-01.

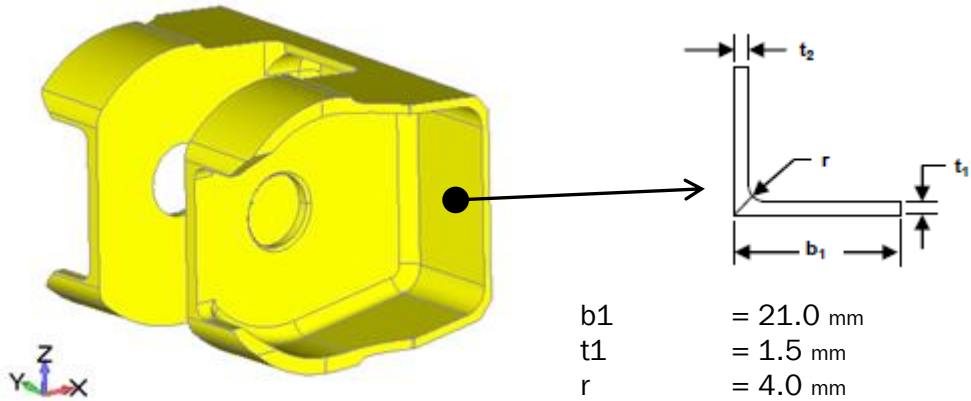

b1	= 21.0 mm	
t1	= 1.5 mm	
r	= 4.0 mm	
b1.eff	= 21.0 mm	(no reduction due t2 used)
Ki	= 0.41	(simple supports)

$x_i = \frac{b_{i,eff}}{t} \sqrt{\frac{F_{cy}}{K.E}}$ =(21.0/1.5)*SQRT(407/(0.41*75200)) = 1.61 Eq. 5.3.4.3-2

$y_i = \frac{0.78}{x_i}$ = 0.78/1.61 = 0.485

$F_{cc,I} = y_i * Fcy$ = 0.485*407. = 197.4 MPa Eq. 5.3.4.3-1

Fcc =197.4 MPa

To supplement the above rational a FE linear buckling analysis has been performed on one critical load case; results are presented in section 2.5.7.4.2

Ultimate Strength Summary Tables

M/C Body (Surface Elements) Stress Levels											
Loading		Maximum Principal					Minimum Principal				
Group	Case	Output Vector	Applied MPa	Allow Type	Allow MPa	RF	Output Vector	Applied MPa	Allow Type	Allow MPa	RF
ED + Aero	2001	7026	22.3	Ftu	462	20.68	7027	-23.4	Ftu	462	19.72
	3002	7026	129.6	Ftu	462	3.57	7027	-123.6	Ftu	462	3.74
	3003	7026	17.2	Ftu	462	26.89	7027	-18.6	Ftu	462	24.86
	4004	7026	106.1	Ftu	462	4.36	7027	-101.2	Ftu	462	4.57
	5005	7026	119.8	Ftu	462	3.86	7027	-114.3	Ftu	462	4.04
Inertia	3053	7026	1.0	Ftu	462	468.57	7027	-1.0	Ftu	462	447.08
	3054	7026	1.0	Ftu	462	447.08	7027	-1.0	Ftu	462	468.57

Table 2-63 Summary of RF's for OB hinge fitting, surface ultimate element stress levels

Applied stress: -123.6 MPs
Allowable: 462.0 MPa Fcu = Ftu
Critical case: 3002
Location: see Figure 2-54

Critical RF = >2.00

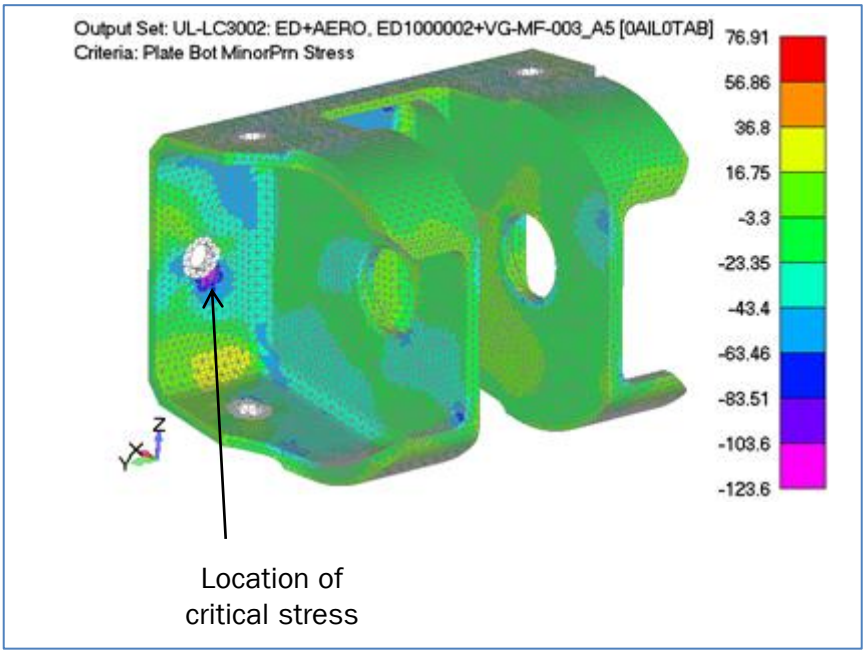

Figure 2-54 OB Fitting, surface element stress levels: minimum principal stress, FEM 9.

M/C Body (Element Centre) Stress Levels											
Loading		Maximum Principal					Minimum Principal				
Group	Case	Output Vector	Applied MPa	Allow Type	Allow MPa	RF	Output Vector	Applied MPa	Allow Type	Allow MPa	RF
ED + Aero	2001	60031	26.8	Ftu	462	17.22	60017	-20.7	Fcc	197	9.53
	3002	60031	148.5	Ftu	462	3.11	60017	-103.6	Fcc	197	1.90
	3003	60031	16.5	Ftu	462	28.07	60017	-16.8	Fcc	197	11.77
	4004	60031	121.5	Ftu	462	3.80	60017	-84.9	Fcc	197	2.33
	5005	60031	137.2	Ftu	462	3.37	60017	-95.7	Fcc	197	2.06
Inertia	3053	60031	1.2	Ftu	462	390.15	60017	-0.9	Fcc	197	216.29
	3054	60031	1.2	Ftu	462	390.15	60017	-0.8	Fcc	197	238.71

Table 2-64 Summary of RF's for OB fitting, solid element centre stress levels

Applied stress: -103.6 MPa
Allowable: 197.0 MPa crippling allow from max b/t flange
Critical case: 3002
Location: see Figure 2-55

Critical RF = 1.90

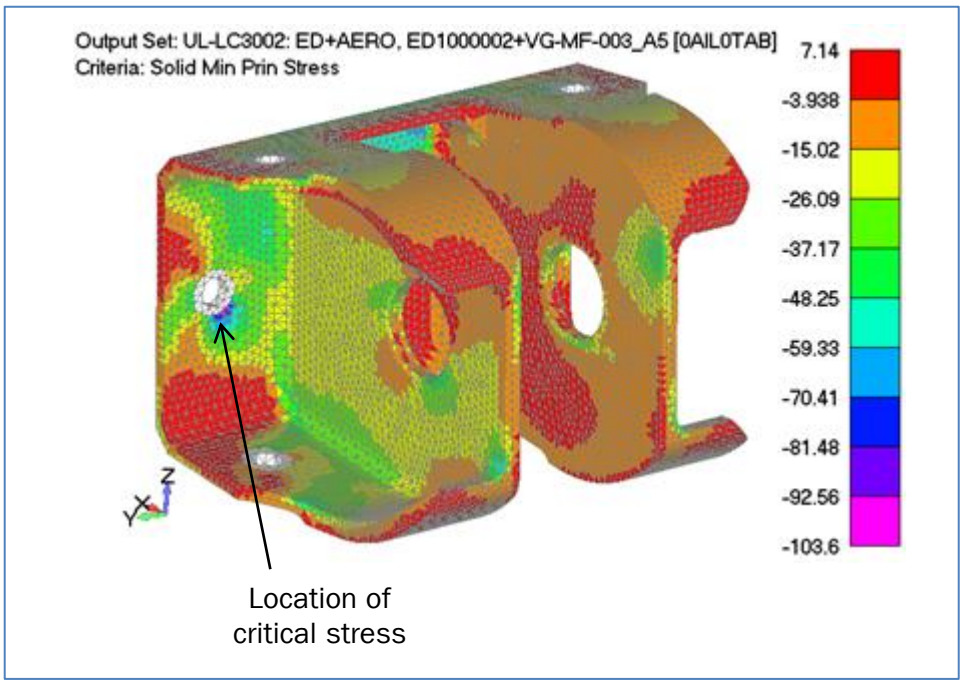

Figure 2-55 OB hinge fitting, solid element centre stress levels: min principal stress

2.5.7.4.2 OB Hinge Fitting Body FE Linear Buckling Check

In addition to checking section compression stress levels against a local flange crippling allowable a FE linear buckling analysis has been performed. Boundary conditions and loading are as the static strength checks. I.e. extracted eigenvalues are relative to ultimate loads. From inspection of Table 2-63, one critical load case has been identified.
A summary is presented below and the mode shape in Figure 2-56.

Buckling criteria: No buckling at < Ultimate Loads

FEM [9] primarily intended for static strength analysis. Mesh density combined with the use of CTET10 elements will result in over estimation of buckling eigenvalues. The analysis should be considered as a supplement/"safety check" of the local buckling allowable used in the previous section.

Load Case		Eigenvalue	RF
3002	ED1000002+VG-MF-003_A5 [0ail0tab]	54.9	>2.00

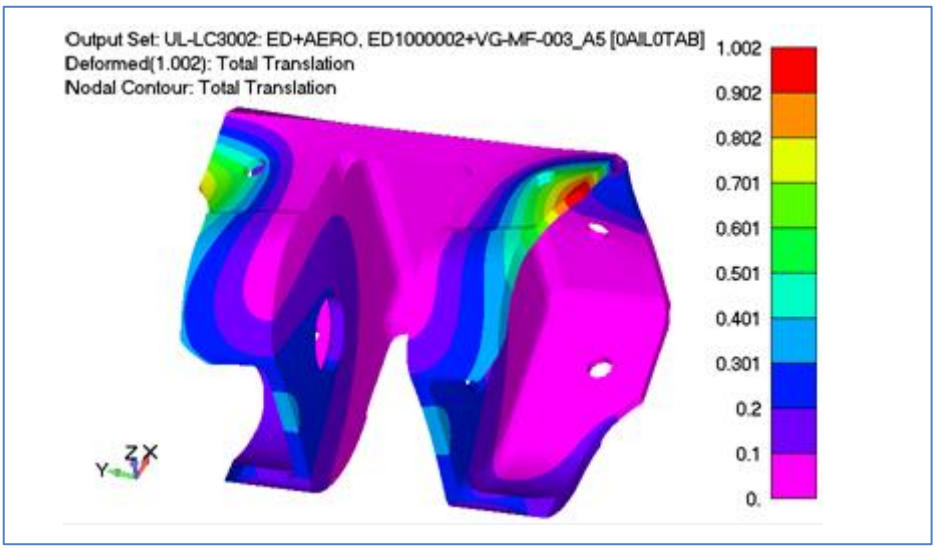

Figure 2-56 Fitting body linear buckling 1st mode, critical ED + Aero case 3002

2.5.7.4.3 OB Hinge Fitting Hinge Lugs

The bracket supports the outboard end of the aileron via a double female lug and pin, see Figure 2-52. Loading for the hinged joint is taken from aileron interface report ref [13]
Interface loads from ref. [13] are presented in the A/C and aileron hinge coordinates. For the lug analysis, loading relative to the lug axis is required. A local lug coordinate C1001 has been defined; it can be seen at the centre of the lug bore in Figure 2-57. Interface loads for the lugs are presented in Table 2-65. The joint is considered symmetric; i.e. load split between the two lugs is 50/50.

A/C coordinate system								C2710001 coordinate system						
Load Case	Aero Pressure + Wing Bending					Inertia		Aero Pressure + Wing Bending					Inertia	
	2001	3002	3003	4004	5005	3053	3054	2001	3002	3003	4004	5005	3053	3054
LIMIT [N.]														
Fx	48	22	244	53	277	0	0	39	-17	-246	5	-73	0	0
Fy	-12	92	14	78	105	-3	3	0	0	0	0	0	1	-1
Fz	-226	1251	-106	1022	1125	-15	15	-228	1254	-104	1026	1161	-10	10
$[Fx,Fz]_{res}$	231	1251	266	1023	1158	15	15	231	1254	267	1026	1163	10	10
ULTIMATE [N.]														
Fx	71	33	367	79	415	0	0	59	-26	-369	8	-110	0	0
Fy	-18	138	21	117	158	-4	4	0	0	0	0	0	2	-2
Fz	-339	1876	-159	1533	1687	-23	23	-341	1881	-156	1539	1742	-15	15
$[Fx,Fz]_{res}$	346	1876	400	1535	1737	23	23	347	1881	401	1539	1745	15	15

Bracket Lug coordinate system							
Load Case	Aero Pressure + Wing Bending					Inertia	
	2001	3002	3003	4004	5005	3053	3054
ULTIMATE [N.]							
Fx	59	-26	-369	8	-110	0	0
Fy	0	0	0	0	0	2	-2
Fz	-341	1881	-156	1539	1742	-15	15
$[Fx,Fz]_{res}$	347	1881	401	1539	1745	15	15

Table 2-65 Outboard front spar hinge fitting interface loads.

The analysis for the lug is carried out by PSM 5 3 11 4_01.xlsm. This is an approve tool for use on the PC-24 project; as such a fully detailed worked example is not required. However for the critical case all input data is presented to enable independent verification. Pin analysis follows PSM 5.3.4.11, section 5.3.11.4.9.
Material strength data is given below and dimensional data in Figure 2-153.

Lug Material
Material = 2124-T851
Basis = B
Ftu = 462.0 MPa
Fty = 414.0 MPa
Fcy = 407.0 MPa
Fbry15 = 586.0 MPa
Fbry20 = 683.0 MPa

Pin Material
Material = A286 steel
Basis = S
Ftu = 1103.0 MPa
Fsu = 655.0 MPa

Bush Material
Material = Al-Bz, AMS4640
Fcy = 469.0 MPa

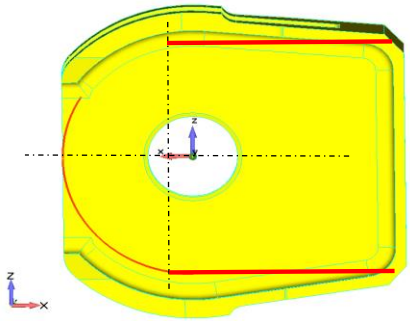

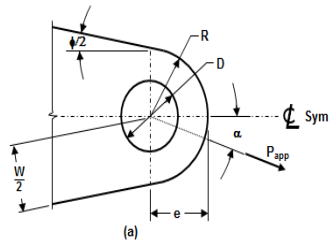

Standard Lug Geometry with "e = R"

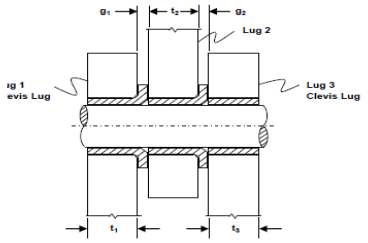

Lug Geometry

D =	15.00	mm
DPO =	12.00	mm
t =	5.00	mm
e =	20.00	mm
R =	18.00	mm
W/2 =	18.00	mm
phi =	30.00	deg

Bush Geometry

Di,bh =	44.80	mm
Do,bh =	-	mm

Pin Geometry

Dia =	6.33	mm
t1 =	2.50	mm
g1 =	4.73	mm
t2 =	12.84	mm
g2 =	4.73	mm
t3 =	2.50	mm

Shoulder in lug bore has been ignored

Figure 2-57 Outboard aileron support bracket, idealized lug and pin dimensions.

A summary of RF's is presented in Table 2-66

Criteria	Lug Ultimate Reserve Factors vs Load Case Id						
	Aero Pressure + Wing Bending					Inertia	
	2001	3002	3003	4004	5005	3053	3054
IB Lug stg	140.80	26.92	119.12	32.98	28.66	3388.39	3388.39
OB Lug stg	140.80	26.92	119.12	32.98	28.66	3388.39	3388.39

Table 2-66 Summary of OB support bracket lug RF's.

Lug
Critical Load Case = 5005
Failure mode Tension strength ultimate
Comment IB and OB lugs have identical loading and idealized geometry

RF = >2.0

RF includes a fitting factor of 1.15

Pin
See support structure analysis, section 2.5.15.5.4

Summary of Lug Input – Output Data for Critical Case

Loading

Load Case =	5005		
Safety Factor =	1.50		
		Ult	Limit
Axial Load[24]	P_{ax} =	410.	273. N.
Transverse Load	P_{tr} =	1696.	1130. N.
Resultant Load	P_{app} =	1744.	1163. N
Alpha =		76.4	76.4 deg.

Lug RF Summary from PSM 5 3 11 4_01.xlsm

Failure mode	Applied [N.]	Allowable [N.]	RF
Tension strength ultimate , P_{tu}	1129	34941.	26.92
Tension strength limit, P_{ty}	752.	34442.	39.80
Lug net section tension strength limit, $P_{ty,ns}$	752.	43470.	50.23
Lug bearing strength limit, P_{bry}	752.	33997.	39.29
Bush bearing strength limit, P_{bry}	..752.	194354	224.60

Failure mode = Tension strength limit **RF = >2.00**

RF includes a Fitting Factor of 1.15

[24] Always considered as a lug tension load, irrespective of sign.

2.5.7.4.4 OB Hinge Fitting to Front Spar Joint

The joint to the aileron box is represented in FEM [9] by CBUSH fasteners (see Figure 2-14).
An overview of the joint arrangement is given in Figure 2-51.
Fastener strength data has been taken from ref. [4]. For skin/flange thickness values which do not match standard sheet values, simple linear interpolation has been used. Joint fastener details and allowables are presented in Table 2-67. A summary of RF's is presented in Table 2-68.

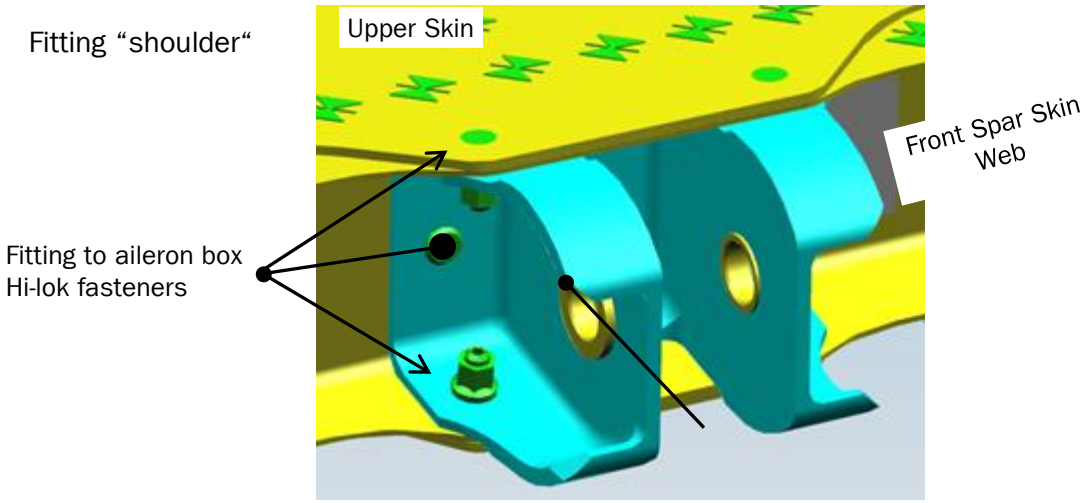

Each fitting shoulder is attached to the aileron box via:
Upper skin 1 x HSTB411 - 4.0 mm, C'sk Hi-Lok
F spar web 2 x HSTB410 - 4.0 mm, Pro'd Hi-Lok
Lower skin 1 x HSTB411 - 4.0 mm, C'sk Hi-Lok

Figure 2-58 Hinge fitting to front spar joint details.

Joint Allowables

							Ultimate Allowables			Ultimate Allowables			
		Fastener Details				Shear	Bracket Bearing			Spar or Skin Bearing			
Allow	Part	Type	Dash	Dia	No.	Allow	t_{rib}	Mat_{brk}	/Fastener	t_s	Mat_s	/Fastener	Mode
Id				mm		N.	mm		N.	mm		N.	
A	Upper Skin	HSTB411	5	4.00	2	8920	1.6	2124-T851	4770	1.6	2024-T3	4770	Bearing
B	Front Spar Web	HSTB410	5	4.00	2	8920	1.5	2124-T851	5020	1.0	2124-T851	3480	Bearing
C	Lower Skin	HSTB411	5	4.00	2	8920	1.7	2124-T851	5135	1.6	2024-T3	4770	Bearing

Table 2-67 OB hinge fitting, summary of fastener allowables

Joint Loading and RF's

Fastener loading has been extracted from FEM [8]. Each fastener is represented by a CBUSH. Element orientation is such that CBUSH X & Y forces are "shear" & Z forces axial.
Due to flexibility of the fitting backup structure[25], joint loads are assumed to be transferred by fastener shear alone. This assumption is enforced in FEM [8] by using PBUSH axial stiffness of the 10. N./ mm.

[25] The stiffness of the backup structure is not modelled in FEM [8].

Load Case	Joint	CBUSH Id	Applied Shear	Applied Axial	Allowable Id	Allowable Fastener	Allowable Brg_{fit}	Allowable $Brg_{sk/sp}$	Allowable Mode	RF
			N.			N.				
LC2001	Upper	1	167.8	0.22	A	8920	4770	4770	Bearing	**24.72**
	Skin	2	164.0	0.22	A	8920	4770	4770	Bearing	**25.28**
	Front	3	200.2	0.01	B	8920	5020	3480	Bearing	**15.11**
	Spar Web	4	201.8	0.00	B	8920	5020	3480	Bearing	**14.99**
	Lower	5	135.3	-0.22	C	8920	5135	4770	Bearing	**30.65**
	Skin	6	133.9	-0.22	C	8920	5135	4770	Bearing	**30.96**
LC3002	Upper	1	840.8	-1.23	A	8920	4770	4770	Bearing	**4.93**
	Skin	2	820.4	-1.22	A	8920	4770	4770	Bearing	**5.05**
	Front	3	1107.7	0.02	B	8920	5020	3480	Bearing	**2.73**
	Spar Web	4	1116.2	0.03	B	8920	5020	3480	Bearing	**2.71**
	Lower	5	828.4	1.20	C	8920	5135	4770	Bearing	**5.00**
	Skin	6	821.7	1.23	C	8920	5135	4770	Bearing	**5.04**
LC3003	Upper	1	34.5	0.11	A	8920	4770	4770	Bearing	**120.26**
	Skin	2	36.1	0.10	A	8920	4770	4770	Bearing	**114.92**
	Front	3	97.2	-0.07	B	8920	5020	3480	Bearing	**31.14**
	Spar Web	4	98.0	-0.07	B	8920	5020	3480	Bearing	**30.87**
	Lower	5	170.9	-0.11	C	8920	5135	4770	Bearing	**24.26**
	Skin	6	171.2	-0.11	C	8920	5135	4770	Bearing	**24.23**
LC3053	Upper	1	6.6	0.01	A	8920	4770	4770	Bearing	**623.86**
	Skin	2	6.5	0.01	A	8920	4770	4770	Bearing	**639.44**
	Front	3	8.8	0.00	B	8920	5020	3480	Bearing	**342.50**
	Spar Web	4	8.9	0.00	B	8920	5020	3480	Bearing	**339.90**
	Lower	5	6.7	-0.01	C	8920	5135	4770	Bearing	**622.74**
	Skin	6	6.6	-0.01	C	8920	5135	4770	Bearing	**627.77**
LC3054	Upper	1	6.6	-0.01	A	8920	4770	4770	Bearing	**623.86**
	Skin	2	6.5	-0.01	A	8920	4770	4770	Bearing	**639.44**
	Front	3	8.8	0.00	B	8920	5020	3480	Bearing	**342.50**
	Spar Web	4	8.9	0.00	B	8920	5020	3480	Bearing	**339.90**
	Lower	5	6.7	0.01	C	8920	5135	4770	Bearing	**622.74**
	Skin	6	6.6	0.01	C	8920	5135	4770	Bearing	**627.77**
LC4004	Upper	1	680.1	-1.01	A	8920	4770	4770	Bearing	**6.09**
	Skin	2	663.5	-1.00	A	8920	4770	4770	Bearing	**6.25**
	Front	3	906.8	0.03	B	8920	5020	3480	Bearing	**3.33**
	Spar Web	4	913.7	0.03	B	8920	5020	3480	Bearing	**3.31**
	Lower	5	685.7	0.98	C	8920	5135	4770	Bearing	**6.04**
	Skin	6	680.2	1.00	C	8920	5135	4770	Bearing	**6.09**

Table 2-68 OB hinge fitting, fastener (CBUSH) loading and RF's

From inspection of summary Table 2-68

Critical load case is = LC3002
Critical joint element = fitting to front spar web (CBUSH 4)
Critical RF = 3.31 **RF = >2.00**

Example calculation for critical load case/fastener

Fastener loads for CBUSH Id.4 (front spar, inboard fastener)

Ultimate shear resultant force	= 1116.2 N.	(Table 2-68)
Ultimate axial force	= 0.31 N.	negligible

Fastener details for the skin/flange

Fastener HSTB411 Hi-Lok, Dia.	= 4.0mm, C'sk head.	
Fastener shear allow.	= 8920. N.	(Bearing critical, ∴ 1.15 factor not required)
Bearing in hinge fitting	= 5020. N.	
Bearing in front spar	= 3480. N.	

Joint allow is minimum of shear and bearing = 3480. N.

RF = Allowable/(FF*Apllied) =3480/(1.15*1116.2) **RF = >2.00**

RF includes a Fitting Factor of 1.15

2.5.8 Rear Spar

This section documents the analysis of the aileron rear spar and summarises the analysis parameters and results. The rear spar consists of two parts (listed in Table 2-69).

The rear spar is checked for the following:

- Upper and lower cap flange strength and stability.
- Panel web strength under axial and bending loads.
- Panel web stability.
- Additional cap loading from skin post-buckling see section 2.5.9.6 and 2.5.10.6.
- Attachment to skins

The analysis makes extensive use of PESS analysis modules; for this part of the analysis only input data and import of results summary tables are provided[26]. Complimenting PESS are PSM methods automated using Excel tables. Worked examples are provided to illustrate the use and construction of these tables for critical cases and locations. A summary table of RF's is provided for each strength/stability check.

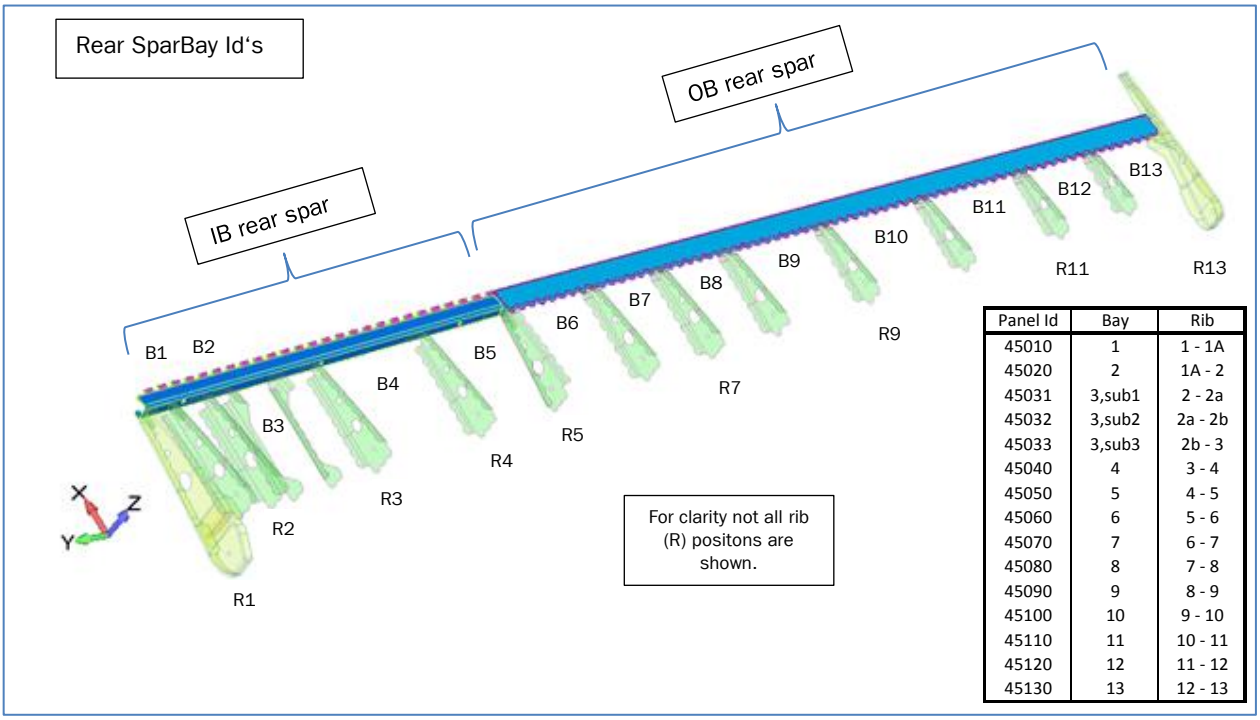

Panel Id	Bay	Rib
45010	1	1 - 1A
45020	2	1A - 2
45031	3,sub1	2 - 2a
45032	3,sub2	2a - 2b
45033	3,sub3	2b - 3
45040	4	3 - 4
45050	5	4 - 5
45060	6	5 - 6
45070	7	6 - 7
45080	8	7 - 8
45090	9	8 - 9
45100	10	9 - 10
45110	11	10 - 11
45120	12	11 - 12
45130	13	12 - 13

Figure 2-59 Rear spar web bay identification.

[26] See section 2.5.5 for PESS analysis notes.

2.5.8.1 Calculation File, Geometry and Materials

The table below provides an overview of analysis data

Part	Part	Calculation Files		Material
		Id	Geometry	
Rear Spar (IB)	557.60.24.317/18	[2]	Table 6-13	2024 T42 sheet, S basis
Rear Spar (OB)	557.60.24.401/02	[6]	Table 2-71, Table 2-72	

Table 2-69 Rear spar overview of calculation files, geometry and materials

2.5.8.2 Load Case Applicability

The complete set of aileron installation load cases is given Table 2-12. The sub set of loading applicable to the front spar hinge fittings is given in Table 2-12.

Load Case Applicability Table for Aileron Box						
Angle [°]	-25	-22	0	3	10	15
DFEM	10	20	30	40	50	60
Applicable Load Case Id's.	Aerodynamic + Wing Bending					
		2001	3002 3003	4004	5005	
	Flight Control System					
	None					
	Inertia					
			3053 3054			

Table 2-70 Applicable load cases for the rear spar hinge.

2.5.8.3 Web Panels Load Extraction

The majority of load extraction from the FE models is performed via PESS *FE data* module with the following options set.

Web Panels
PESS Panel data conversion = FBD + SC (LRM010)
Panels are subject to bending loads Mbx, hence LRM010 method is appropriate.

Cap Flanges
PESS Stringer data conversion = no option require to be set.

The relationship between panel and PESS load extraction orientation is shown in Figure 2-60.

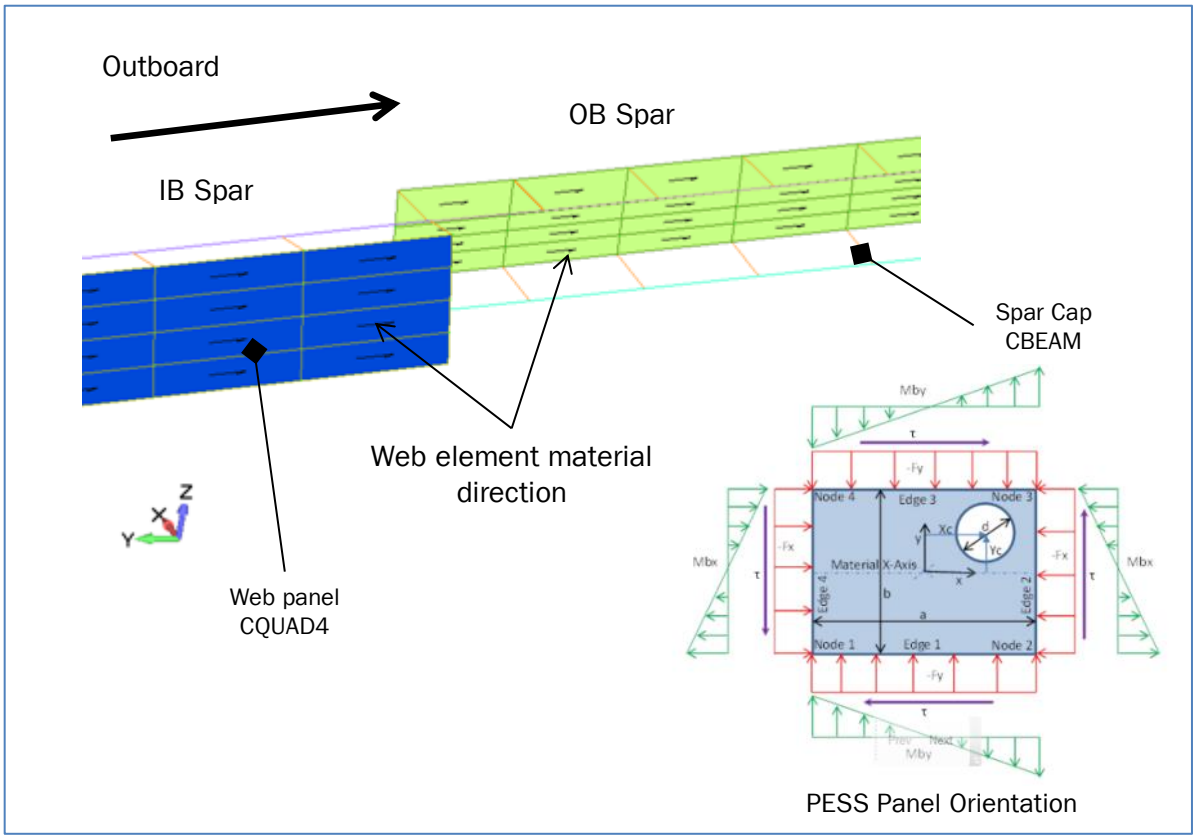

Figure 2-60 Rear spar panel forces and orientation.

2.5.8.4 Rear Spar Web Strength under Biaxial Loading

Stress data is extracted/condensed from FEM [3] to [6] results via FEMAP data tables.
The FEMAP output summary method used identifies elements with the max/min centre stress values for each of the load cases given in
The "raw data tables" are then written to calculation file [2], worksheet: *FEMAP Rspar*.
From the "raw data" sheet the following RF summary tables are constructed.
RF criteria:

- Tension strength: Maximum principal stress vs Ftu allowable.
- Compression strength: Minimum principal stress vs Fcy allowable.

In addition to the above biaxial strength checks, panel buckling checks are performed in section 2.5.8.5 (follows this section).

<u>Rear Spar Inboard Part</u>
Max/min stress from panel Id's: 45010, 45020, 45031, 45033, 45040, 45050.

	Maximum Principal Stress							Minimum Principal Stress						
Load Case	Element Top Surface		Element Bot Surface		Allowable		RF	Element Top Surface		Element Bot Surface		Allowable		RF
	Element Id.	Value MPa	Element Id.	Value MPa	Criteria	Value MPa		Element Id.	Value MPa	Element Id.	Value MPa	Criteria	Value MPa	
2001	2715542	38.7	2715542	33.2			11.02	2715656	-65.9	2715656	-57.0			4.29
3002	2715656	151.9	2715656	128.8			2.81	2715542	-94.4	2715542	-84.0			2.99
3003	2715542	60.9	2715542	54.2			7.00	2715656	-96.7	2715656	-83.1			2.92
3054	2715490	3.6	2715548	3.6	Ftu	427.0	117.03	2715549	-3.6	2715490	-4.8	Fcy	283.0	59.20
3055	2715542	11.3	2715655	23.3			18.31	2715490	-20.3	2715656	-17.1			13.95
4004	2715656	148.8	2715656	127.2			2.86	2715542	-97.2	2715542	-84.9			2.91
5005	2715656	142.9	2715656	120.8			2.98	2715542	-89.9	2715542	-79.2			3.14

Table 2-71 Aileron rear spar inboard part, web biaxial strength.

Critical tension load case	3002		
Critical bay	3		
Critical ult. applied stress	Major principal	151.9 MPa	
Allowable stress	Ftu	427.0 MPa	2024-T42, S basis
RF = allow/applied	427./151.9 = 2.81		**RF = >2.00**
Critical compression load case	4004		
Critical bay	3		
Critical ult. applied stress	Minor principal	-97.2 MPa	
Allowable stress	Fcy	283.0 MPa	2024-T42, S basis
RF = allow/applied	283./97.2 = 2.91		**RF = >2.00**

Rear Spar Outboard Part

Max/min stress from panel Id's: 45060, 45070, 45080, 45090, 45100, 45110, 45120, 45130.

	Maximum Principal Stress							Minimum Principal Stress						
Load Case	Element Top Surface		Element Bot Surface		Allowable		RF	Element Top Surface		Element Bot Surface		Allowable		RF
	Element Id.	Value MPa	Element Id.	Value MPa	Criteria	Value MPa		Element Id.	Value MPa	Element Id.	Value MPa	Criteria	Value MPa	
2001	2715288	16.2	2715295	10.0			26.35	2715263	-11.6	2715288	-15.2			18.61
3002	2715295	54.9	2715316	87.6			4.87	2715316	-91.7	2715267	-54.6			3.08
3003	2715248	16.3	2715295	84.8			5.03	2715295	-87.9	2715290	-15.6			3.21
3054	2715224	1.9	2715224	1.9	Ftu	427.0	221.58	2715200	-0.8	2715223	-0.4	Fcy	283.0	361.29
3055	2715199	11.0	2715220	9.7			38.81	2715220	-11.2	2715199	-10.9			25.15
4004	2715295	47.8	2715316	72.7			5.86	2715316	-76.5	2715267	-48.5			3.70
5005	2715295	75.9	2715288	66.5			5.62	2715288	-69.9	2715295	-73.6			3.84

Table 2-72 Aileron box rear spar outboard part, web biaxial strength.

Critical tension load case	3002		
Critical bay	8		
Critical ult. applied stress	Major principal	87.6 MPa	
Allowable stress	Ftu	427.0 MPa	2024-T42, S basis
RF = allow/applied	427./87.6 = 4.87		**RF = >2.00**

Critical compression load case	3002		
Critical bay	9		
Critical ult. applied stress	Minor principal	-91.7 MPa	
Allowable stress	Fcy	283.0 MPa	2024-T42, S basis
RF = allow/applied	283./91.7 = 3.08		**RF = >2.00**

2.5.8.5 Web Buckling

Summary tables from the PESS panel analysis are presented below.
Ref. calculation files [2] & [104]

Buckling Criteria: No Buckling < Ultimate

All buckling RF's are relative to ultimate

Summary of PESS Panel Geometry

Bay	PANEL ID [-]	Panel Name [-]	Type [-]	Mat [-]	Edge Constraint [-]	Basic geometry a [mm]	b [mm]	t [mm]	r [mm]
1	45010	par_web_PANEL_45010	Flat	1	SSSS	46.04	29.19	1.00	-
2	45020	par_web_PANEL_45020	Flat	1	SSSS	70.38	28.79	1.00	-
3,sub1	45031	par_web_PANEL_45031	Flat	1	SSSS	40.73	28.42	1.00	-
3,sub2	45032	par_web_PANEL_45032	Flat	1	SSSS	74.91	28.08	1.00	-
3,sub3	45033	par_web_PANEL_45033	Flat	1	SSSS	83.66	27.55	1.00	-
4	45040	par_web_PANEL_45040	Flat	1	SSSS	199.30	26.62	1.00	-
5	45050	par_web_PANEL_45050	Flat	1	SSSS	150.59	25.55	1.00	-
6	45060	par_web_PANEL_45060	Flat	1	SSSS	161.21	18.47	0.80	-
7	45070	par_web_PANEL_45070	Flat	1	SSSS	124.66	17.82	0.80	-
8	45080	par_web_PANEL_45080	Flat	1	SSSS	124.77	17.30	0.80	-
9	45090	par_web_PANEL_45090	Flat	1	SSSS	174.68	16.69	0.80	-
10	45100	par_web_PANEL_45100	Flat	1	SSSS	183.20	15.95	0.80	-
11	45110	par_web_PANEL_45110	Flat	1	SSSS	179.68	15.19	0.80	-
12	45120	par_web_PANEL_45120	Flat	1	SSSS	129.75	14.53	0.80	-
13	45130	par_web_PANEL_45130	Flat	1	SSSS	138.21	13.94	0.80	-

Table 2-73 Rear spar web panel geometry (summary from PESS).

Summary of PESS Panel Buckling Allowables

Bay	PANEL ID [-]	Standard allowables Ks [-]	Fscr [MPa]	Kc [-]	Fccr [MPa]	Kb [-]	Fbcr [MPa]	Pb [MPa]
1	45010	6.22	171.46	4.33	264.78	24.32	297.72	171.46
2	45020	5.44	168.89	4.17	264.03	24.25	298.53	168.89
3,sub1	45031	6.51	173.82	4.52	273.70	23.80	298.76	173.82
3,sub2	45032	5.35	169.72	4.10	266.90	24.25	300.13	169.72
3,sub3	45033	5.25	170.17	4.02	268.74	24.25	301.35	170.17
4	45040	4.95	170.39	4.04	275.22	24.25	303.56	170.39
5	45050	4.99	172.55	4.04	282.04	24.25	306.21	172.55
6	45060	4.93	176.95	4.04	297.04	24.25	312.72	176.95
7	45070	4.96	178.70	4.04	301.86	24.25	315.03	178.70
8	45080	4.95	179.99	4.04	305.63	24.25	316.92	179.99
9	45090	4.91	181.41	4.04	310.12	24.25	319.27	181.41
10	45100	4.90	183.35	4.04	315.45	24.25	322.20	183.35
11	45110	4.90	185.44	4.04	320.92	24.25	325.35	185.44
12	45120	4.93	187.44	4.04	325.67	24.25	328.23	187.44
13	45130	4.92	189.18	4.04	330.03	24.25	330.96	189.18

Table 2-74 Front spar web panel buckling allowables (summary from PESS).

Summary of PESS Panel Buckling and Strength Critical RF's

Bay	PANEL ID [-]	Ultimate Buckling RF			Post Buckle Required
		LC	Type	RF	
1	45010	4004	Shear + Bending	56.65	No
2	45020	4004	Shear + Bending	12.02	No
3,sub1	45031	4004	Shear + Bending	3.76	No
3,sub2	45032	3002	Shear + Bending	3.91	No
3,sub3	45033	3002	Shear + Comp	4.26	No
4	45040	3002	Shear + Bending	8.84	No
5	45050	4004	Shear + Bending	11.72	No
6	45060	4004	Shear + Bending	17.13	No
7	45070	5005	Shear + Bending	12.83	No
8	45080	5005	Shear + Bending	7.52	No
9	45090	5005	Shear + Bending	8.21	No
10	45100	5005	Shear + Bending	12.77	No
11	45110	5005	Shear + Bending	29.08	No
12	45120	5005	Shear + Bending	52.31	No
13	45130	3002	Shear + Bending	69.67	No

Table 2-75 Rear spar web panel critical RF's.

Web buckling

Critical load case: 4004

Critical web panel: Bay 3 sub-panel 3 PESS panel 45031

Critical RF = 3.76 **RF = >2.00**

(no buckling below ultimate)

2.5.8.6 Upper Spar Cap

For analysis purpose the spar caps have been treated as a “PESS STRINGER”. Summary tables from the PESS stringer analysis are presented below.
Ref. calculation files [2] & [105]

Summary of Upper Cap PESS Stiffener Geometry

Rib	STRINGER ID [-]	STRINGER Name [-]	Type [-]	Mat [-]	Cross-section properties Area [mm2]	Iyy [mm4]	Izz [mm4]	Skin Mat [-]	t [mm]	Fastener Type [-]	Pitch [mm]	Diameter [mm]
1 - 1A	46010	STRINGER_46010	Flange	1	20.00	1.67	666.67	2	1.50	a	25.40	3.20
1A - 2	46020	STRINGER_46020	Flange	1	20.00	1.67	666.67	2	1.50	a	25.40	3.20
2 - 2a	46031	STRINGER_46031	Flange	1	20.00	1.67	666.67	2	1.50	a	25.40	3.20
2a - 2b	46032	STRINGER_46032	Flange	1	20.00	1.67	666.67	2	1.50	a	25.40	3.20
2b - 3	46033	STRINGER_46033	Flange	1	20.00	1.67	666.67	2	1.50	a	25.40	3.20
3 - 4	46040	STRINGER_46040	Flange	1	20.00	1.67	666.67	2	1.50	a	25.40	3.20
4 - 5	46050	STRINGER_46050	Flange	1	20.00	1.67	666.67	2	1.50	a	25.40	3.20
5 - 6	46060	STRINGER_46060	Flange	1	24.00	1.28	1800.00	2	1.50	a	25.40	3.20
6 - 7	46070	STRINGER_46070	Flange	1	16.00	0.85	533.33	2	1.50	a	25.40	3.20
7 - 8	46080	STRINGER_46080	Flange	1	24.00	1.28	1800.00	2	1.50	a	25.40	3.20
8 - 9	46090	STRINGER_46090	Flange	1	24.00	1.28	1800.00	2	1.50	a	25.40	3.20
9 - 10	46100	STRINGER_46100	Flange	1	24.00	1.28	1800.00	2	1.50	a	25.40	3.20
10 - 11	46110	STRINGER_46110	Flange	1	24.00	1.28	1800.00	2	1.50	a	25.40	3.20
11 - 12	46120	STRINGER_46120	Flange	1	24.00	1.28	1800.00	2	1.50	a	25.40	3.20
12 - 13	46130	STRINGER_46013	Flange	1	30.00	2.50	2250.00	2	1.50	a	25.40	3.20

Table 2-76 Rear spar upper cap geometry (summary from PESS).

Summary of Upper Cap PESS Stiffener Buckling & Crippling Allowables

STRINGER ID [-]	Local buckling stress BE1 [MPa]	BE2 [MPa]	BE3 [MPa]	BE4 [MPa]	BE5 [MPa]	BE6 [MPa]	BE7 [MPa]	Fcc [MPa]	IRB E1 [MPa]	E2 [MPa]
46010	314.12	134.15	-	-	-	-	-	89.19	212.58	-
46020	314.12	238.69	-	-	-	-	-	120.89	212.58	-
46031	314.12	238.69	-	-	-	-	-	120.89	212.58	-
46032	314.12	238.69	-	-	-	-	-	120.89	212.58	-
46033	314.12	238.69	-	-	-	-	-	120.89	212.58	-
46040	314.12	238.69	-	-	-	-	-	120.89	212.58	-
46050	291.26	113.79	-	-	-	-	-	75.45	212.58	-
46060	291.26	222.17	-	-	-	-	-	102.26	212.58	-
46070	291.26	113.79	-	-	-	-	-	75.45	212.58	-
46080	291.26	113.79	-	-	-	-	-	75.45	212.58	-
46090	291.26	113.79	-	-	-	-	-	75.45	212.58	-
46100	291.26	113.79	-	-	-	-	-	75.45	212.58	-
46110	291.26	113.79	-	-	-	-	-	75.45	212.58	-
46120	314.12	301.41	-	-	-	-	-	187.85	212.58	-
46130	314.12	238.69	-	-	-	-	-	120.89	212.58	-

Table 2-77 Rear spar upper cap instability allowables (summary from PESS).

Buckling codes:	BE1 to BE7:	Flange local buckling
	Fcc:	Flange crippling
	IRB:	Inter-rivet buckling of attached skin

Summary of Upper Cap PESS Buckling & Strength Critical RF's

Rib	STRINGER	Ultimate Buckling RF			Post Buckle	Strength RF		
	ID	LC	Type	RF	Required	LC	Type	RF
1 - 1A	46010	3002	0	16.44	No	3003	STRENGTH_Mid	82.85
1A - 2	46020	3002	0	11.80	No	3003	STRENGTH_Mid	66.60
2 - 2a	46031	3002	0	10.28	No	3003	STRENGTH_Mid	65.95
2a - 2b	46032	3003	0	18.57	No	4004	STRENGTH_Mid	41.55
2b - 3	46033	3003	0	11.92	No	3002	STRENGTH_Mid	32.05
3 - 4	46040	3003	0	9.32	No	3002	STRENGTH_Mid	21.74
4 - 5	46050	3003	0	23.56	No	3002	STRENGTH_Mid	31.51
5 - 6	46060	3003	0	9.87	No	3003	STRENGTH_Mid	36.34
6 - 7	46070	5005	0	6.24	No	3003	STRENGTH_Mid	20.39
7 - 8	46080	5005	0	10.45	No	3003	STRENGTH_Mid	41.26
8 - 9	46090	5005	0	10.96	No	3003	STRENGTH_Mid	39.76
9 - 10	46100	3003	0	15.97	No	5005	STRENGTH_Mid	37.86
10 - 11	46110	3003	0	19.51	No	5005	STRENGTH_Mid	35.79
11 - 12	46120	2001	0	43.01	No	5005	STRENGTH_Mid	71.34
12 - 13	46130	3003	0	70.68	No	5005	STRENGTH_Mid	119.13

Table 2-78 Rear spar upper cap critical RF's.

Upper Cap Instability

Critical load case: 5005

Critical flange: Upper cap between rib 6 & 7 PESS "stringer" Id. 46070

Critical RF = 6.24 **RF = >2.00**

No buckling below ultimate

Upper Cap Strength

Critical load case: 3003

Critical flange: Upper cap between rib 6 & 7 PESS "stringer" Id. 46070

Critical RF = 20.39 **RF = >2.00**

2.5.8.7 Lower Spar Cap

For analysis purpose the spar caps have been treated as a “PESS STRINGER”. Summary tables from the PESS stringer analysis are presented below.
Ref. calculation files [2] & [105]

Summary of Lower Cap PESS Stiffener Geometry

Rib	STRINGER ID [-]	TRINGER Nan [-]	Type [-]	Mat [-]	Cross-section properties Area [mm2]	Iyy [mm4]	Izz [mm4]	Skin Mat [-]	t [mm]	Fastener Type [-]	Pitch [mm]	Diameter [mm]
1 - 1A	47010	Rspar_LC_STRING	Flange	1	12.30	1.03	155.07	2	1.50	a	25.40	3.20
1A - 2	47020	Rspar_LC_STRING	Flange	1	12.30	1.03	155.07	2	1.50	a	25.40	3.20
2 - 2a	47031	Rspar_LC_STRING	Flange	1	12.30	1.03	155.07	2	1.50	a	25.40	3.20
2a - 2b	47032	Rspar_LC_STRING	Flange	1	12.30	1.03	155.07	2	1.50	a	25.40	3.20
2b - 3	47033	Rspar_LC_STRING	Flange	1	12.30	1.03	155.07	2	1.50	a	25.40	3.20
3 - 4	47040	Rspar_LC_STRING	Flange	1	12.30	1.03	155.07	2	1.50	a	25.40	3.20
4 - 5	47050	Rspar_LC_STRING	Flange	1	9.84	0.52	124.06	2	1.50	a	25.40	3.20
5 - 6	47060	Rspar_LC_STRING	Flange	1	19.20	1.02	921.60	2	1.50	a	25.40	3.20
6 - 7	47070	Rspar_LC_STRING	Flange	1	24.00	2.00	1152.00	2	1.50	a	25.40	3.20
7 - 8	47080	Rspar_LC_STRING	Flange	1	24.00	2.00	1152.00	2	1.50	a	25.40	3.20
8 - 9	47090	Rspar_LC_STRING	Flange	1	24.00	2.00	1152.00	2	1.50	a	25.40	3.20
9 - 10	47100	Rspar_LC_STRING	Flange	1	24.00	2.00	1152.00	2	1.50	a	25.40	3.20
10 - 11	47110	Rspar_LC_STRING	Flange	1	24.00	2.00	1152.00	2	1.50	a	25.40	3.20
11 - 12	47120	Rspar_LC_STRING	Flange	1	24.00	2.00	1152.00	2	1.50	a	25.40	3.20
12 - 13	47130	Rspar_LC_STRING	Flange	1	24.00	2.00	1152.00	2	1.50	a	25.40	3.20

Table 2-79 Rear spar lower cap geometry (summary from PESS).

Summary of Lower Cap PESS Stiffener Buckling & Crippling Allowables

Rib	STRINGER ID [-]	Local buckling stress BE1 [MPa]	BE2 [MPa]	BE3 [MPa]	BE4 [MPa]	BE5 [MPa]	BE6 [MPa]	BE7 [MPa]	Fcc [MPa]	IRB E1 [MPa]	E2 [MPa]
1 - 1A	47010	314.12	301.41	-	-	-	-	-	187.85	212.58	-
1A - 2	47020	314.12	301.41	-	-	-	-	-	187.85	212.58	-
2 - 2a	47031	314.12	301.41	-	-	-	-	-	187.85	212.58	-
2a - 2b	47032	314.12	301.41	-	-	-	-	-	187.85	212.58	-
2b - 3	47033	314.12	301.41	-	-	-	-	-	187.85	212.58	-
3 - 4	47040	291.26	292.65	-	-	-	-	-	150.28	212.58	-
4 - 5	47050	291.26	173.98	-	-	-	-	-	89.19	212.58	-
5 - 6	47060	314.12	197.92	-	-	-	-	-	105.44	212.58	-
6 - 7	47070	314.12	197.92	-	-	-	-	-	105.44	212.58	-
7 - 8	47080	314.12	197.92	-	-	-	-	-	105.44	212.58	-
8 - 9	47090	314.12	197.92	-	-	-	-	-	105.44	212.58	-
9 - 10	47100	314.12	197.92	-	-	-	-	-	105.44	212.58	-
10 - 11	47110	314.12	197.92	-	-	-	-	-	105.44	212.58	-
11 - 12	47120	314.12	197.92	-	-	-	-	-	105.44	212.58	-
12 - 13	47130	0.00	0.00	0.00	0.00	0.00	0.00	0.00	0.00	0.00	0.00

Table 2-80 Rear spar lower cap instability allowables (summary from PESS).

Buckling codes:	BE1 to BE7:	Flange local buckling
	Fcc:	Flange crippling
	IRB:	Inter-rivet buckling of attached skin

Summary of Lower Cap PESS Stiffener Buckling & Crippling Allowables

Rib	STRINGER ID [-]	Local buckling stress BE1 [MPa]	BE2 [MPa]	BE3 [MPa]	BE4 [MPa]	BE5 [MPa]	BE6 [MPa]	BE7 [MPa]	Fcc [MPa]	IRB E1 [MPa]	E2 [MPa]
1 - 1A	47010	314.12	301.41	-	-	-	-	-	187.85	212.58	-
1A - 2	47020	314.12	301.41	-	-	-	-	-	187.85	212.58	-
2 - 2a	47031	314.12	301.41	-	-	-	-	-	187.85	212.58	-
2a - 2b	47032	314.12	301.41	-	-	-	-	-	187.85	212.58	-
2b - 3	47033	314.12	301.41	-	-	-	-	-	187.85	212.58	-
3 - 4	47040	291.26	292.65	-	-	-	-	-	150.28	212.58	-
4 - 5	47050	291.26	173.98	-	-	-	-	-	89.19	212.58	-
5 - 6	47060	314.12	197.92	-	-	-	-	-	105.44	212.58	-
6 - 7	47070	314.12	197.92	-	-	-	-	-	105.44	212.58	-
7 - 8	47080	314.12	197.92	-	-	-	-	-	105.44	212.58	-
8 - 9	47090	314.12	197.92	-	-	-	-	-	105.44	212.58	-
9 - 10	47100	314.12	197.92	-	-	-	-	-	105.44	212.58	-
10 - 11	47110	314.12	197.92	-	-	-	-	-	105.44	212.58	-
11 - 12	47120	314.12	197.92	-	-	-	-	-	105.44	212.58	-
12 - 13	47130	0.00	0.00	0.00	0.00	0.00	0.00	0.00	0.00	0.00	0.00

Table 2-81 Rear spar lower cap instability allowables (summary from PESS).

Summary of Lower Cap PESS Buckling & Strength Critical RF's

Rib	STRINGER ID	Ultimate Buckling RF			Post Buckle Required	Strength RF		
		LC	Type	RF		LC	Type	RF
1 - 1A	47010	3003	F_AF_(2)_Mid	11.61	No	3002	STRENGTH_Mid	17.12
1A - 2	47020	3003	F_AF_(2)_Mid	5.21	No	3002	STRENGTH_Mid	7.98
2 - 2a	47031	3003	F_AF_(2)_Mid	3.52	No	3002	STRENGTH_Mid	5.20
2a - 2b	47032	3003	F_AF_(2)_Mid	1.88	No	3002	STRENGTH_Mid	2.75
2b - 3	47033	4004	F_AF_(2)_Mid	2.84	No	3002	STRENGTH_Mid	7.89
3 - 4	47040	3002	F_AF_(2)_Mid	6.48	No	3003	STRENGTH_Mid	26.84
4 - 5	47050	3002	F_AF_(2)_Mid	17.31	No	5005	STRENGTH_Mid	35.62
5 - 6	47060	3002	F_AF_(2)_Mid	6.63	No	5005	STRENGTH_Mid	25.13
6 - 7	47070	3003	F_AF_(2)_Mid	18.08	No	5005	STRENGTH_Mid	19.30
7 - 8	47080	2001	F_AF_(2)_Mid	19.37	No	5005	STRENGTH_Mid	17.75
8 - 9	47090	3002	F_AF_(2)_Mid	7.83	No	5005	STRENGTH_Mid	30.90
9 - 10	47100	3002	F_AF_(2)_Mid	5.92	No	5005	STRENGTH_Mid	38.21
10 - 11	47110	3002	F_AF_(2)_Mid	5.86	No	3002	STRENGTH_Mid	54.55
11 - 12	47120	3002	F_AF_(2)_Mid	8.69	No	3002	STRENGTH_Mid	73.94
12 - 13	47130	3002	F_AF_(2)_Mid	13.09	No	3002	STRENGTH_Mid	119.25

Table 2-82 Rear spar lower cap critical RF.

Lower Cap Instability

Critical load case: 3003

Critical flange : Lower cap between rib 2a & 2b PESS "stringer" Id. 47032

Critical RF **RF = 1.88**

No buckling below ultimate

Lower Cap Strength

Critical load case: 3002

Critical flange: Lower cap between rib 2a & 2b PESS "stringer" Id. 47032

Critical RF **RF = >2.00**

2.5.9 Aileron Box Upper Skin

This section documents the analysis of the aileron box upper skin. It provides summaries of analysis input data (geometry, materials etc.), load extraction, analysis and RF's. Where PESS analysis modules[27] have not been used, analyses for critical cases are illustrated by worked examples.
The following strength and buckling checks are made:

- Strength under biaxial and shear loading (FEMAP post processing)
- Panel buckling (PESS)
- Permanent buckling at Limit Load (PESS)
- Post-buckling (PSM 5.3.5.6)
- Skin to front spar joints
- Skin to rear spar joints
- Skin to rib joints (see rib section 2.5.11.7)

The analysis is predominantly based on PESS. PESS skin entities are defined in Appendix K, Table 6-25.

The skins are an exception to the aileron global buckling policy:

Skin buckling > Limit Load permitted. (section 2.5.2)

The skin is bounded by the front and rear spars and is divided into panels by ribs. For weight saving purposes panel thickness varies. To accommodate countersunk fasteners increased thickness lands are used at joints. The skin is shown in Figure 2-61 and the division into panels/PESS groups in Figure 2-62.

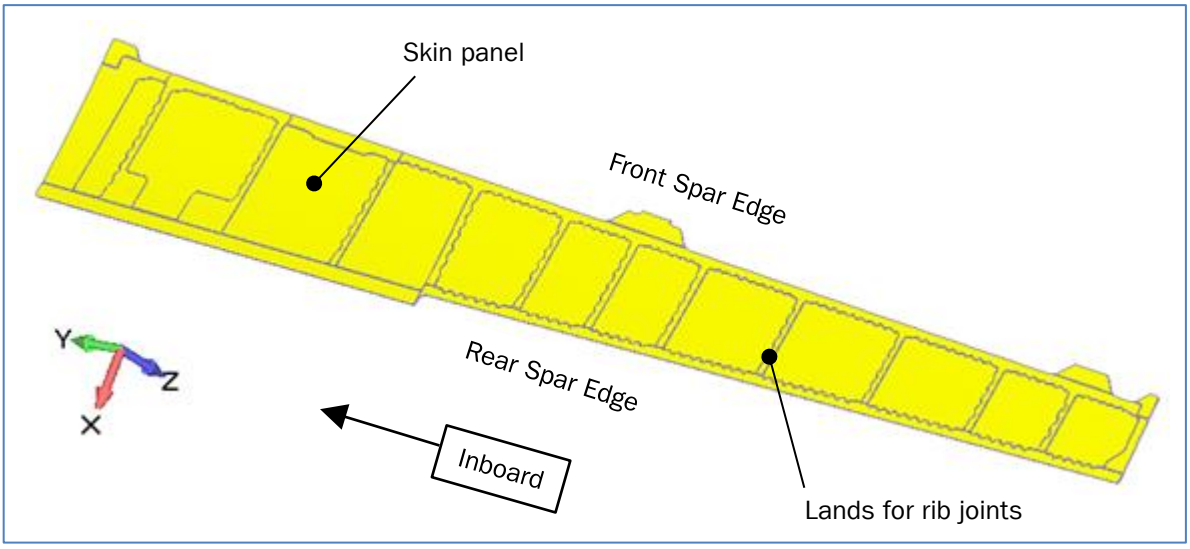

Figure 2-61 Aileron box upper skin (Part-5576024305/-)

[27] See section 2.5.5 PESS Analysis Notes

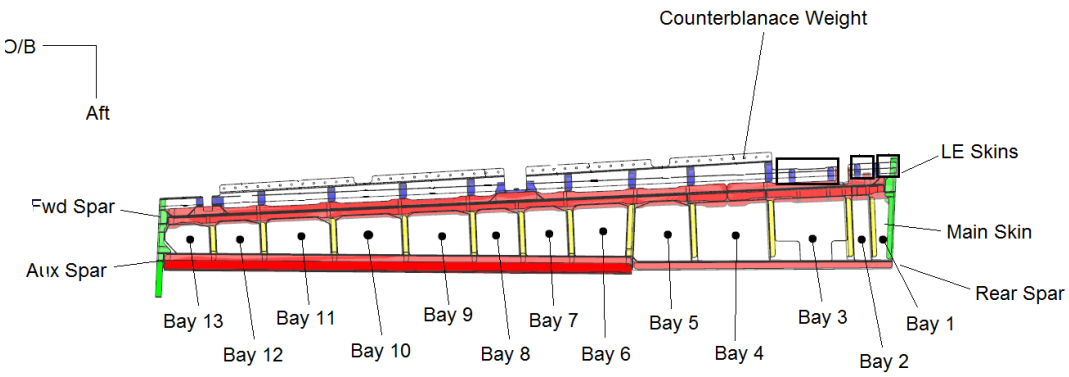

Each bay/panel has an associated FEMAP/PESS group. The group contains elements which represent the panel in FEMs [2] to [6]
The group names follow PESS rules. For example:
Bay 1 group name = *Uskin_box_PANEL_12010*
Bay 9 group name = *Uskin_box_PANEL_12090*
Bay 12 group name = *Uskin_box_PANEL_12120*

Figure 2-62 Aileron box upper skin bays and PESS groups

2.5.9.1 Calculation Files, Geometry and Materials

The table below and Figure 2-61 & Figure 2-62 provide an overview of data for the analysis.

Part	Part No.	Calculation Files			Material
		Id	Geometry	FEM	
Upper Skin	5576024305/06	2	Table 6-13	3 to 6	2024 T3 sheet, B basis
		7	Table 2-87		

Table 2-83 Upper skin overview of calculation file, geometry and materials

2.5.9.2 Load Case Applicability

Load cases applicable to the upper skin are given in Table 2-84.These are a subset of those described in section 2.3 and Table 2-12.

Load Case Applicability Table for Aileron Box						
Angle [°]	-25	-22	0	3	10	15
DFEM	10	20	30	40	50	60
Applicable Load Case Id's.	Aerodynamic + Wing Bending					
		2001	3002 3003	4004	5005	
	Flight Control System					
	None					
	Inertia					
			3053 3054			

Table 2-84 Load case applicability table for aileron box upper skin.

2.5.9.3 Load Extraction for Upper Skin

Load extraction for both the upper and lower skins is similar. It is predominantly based on PESS with additional data from FEMAP data tables.
Load cases applicable to the upper skin are given in Table 2-84.
PESS load extraction details applicable to the main upper skins are:

PESS Panel data conversion = Element average (LRM020) used in panel analysis[28]
PESS Panel data conversion = FBD + SC (LRM010) used in joint analysis
DFEM results are ultimate, the safety factor for all load cases = 1.5
∴ PESS LL-Factor = 0.667 & UL-Factor = 1.00

The relationship between panel and PESS load extraction orientation is shown in Figure 2-63

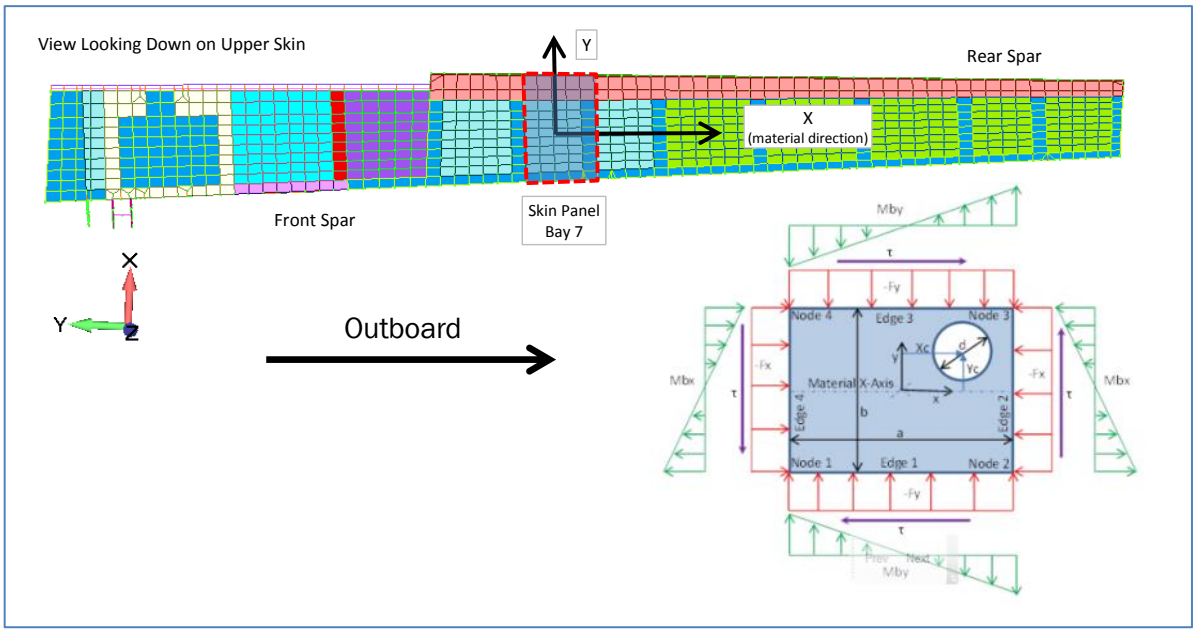

Figure 2-63 Upper main skin panel forces, key and orientation.

[28] Panels have curvature; therefore element average load extraction must be used.

2.5.9.4 Panel Strength under Biaxial Loading

Stress data is extracted/condensed from FEM's [3] to [6] results via FEMAP data tables.
The FEMAP output summary method selected identifies elements with the max/min centre stress values for each of the load cases given in Table 2-84.
The "raw data tables" are then written to calculation file [2], worksheet: *FEMAP Skin*.
From the "raw data" sheet the following RF summary tables are constructed.

- Tension strength: Maximum principal stress vs Ftu allowable.
- Compression strength: Minimum principal stress vs Fcy allowable.

If the critical stress occurs at a fastener row, net area effects have to be accounted for. A simple conservative approach will be employed using a minimum RF policy.
Assume the skin critical tension stress occurs at a row of fasteners with a 4D pitch.
Assume major principle stress is at right angles to the fastener row
Hence

$$f_{net} = f_{gross}*4/3 \quad = f_{FEM}*4/3$$

Therefore minimum RF policy is = 1.33.
In addition to the above biaxial strength checks, panel buckling checks are performed in section 2.5.9.5 (follows this section).

Tension Strength

Load ID	Maximum Principal Stress						
	Element Top Surface		Element Bot Surface		Allowable		RF
	Element Id.	Value MPa	Element Id.	Value MPa	Criteria	Value MPa	
2001	2711213	32.6	2711237	32.5			13.54
3002	2711017	73.9	2711097	90.9			4.85
3003	2710938	87.8	2711579	70.7			5.02
3054	2711574	4.6	2710836	4.7	Ftu	441.0	93.22
3055	2711017	33.0	2711033	17.1			13.37
4004	2711017	64.6	2711097	80.4			5.48
5005	2711017	64.8	2711306	73.3			6.01

Table 2-85 Upper skin, summary of tension (major principal) stress.

Critical tension load case	3002		
Critical ult. applied stress	Major principal	90.9 MPa	
Allowable stress	Ftu	441.0 MPa	2024-T3, B basis

RF = Ftu allow/Major applied 441./90.9 = 4.85 **RF = >2.00**

Net area minimum RF policy RF>1.33 Pass

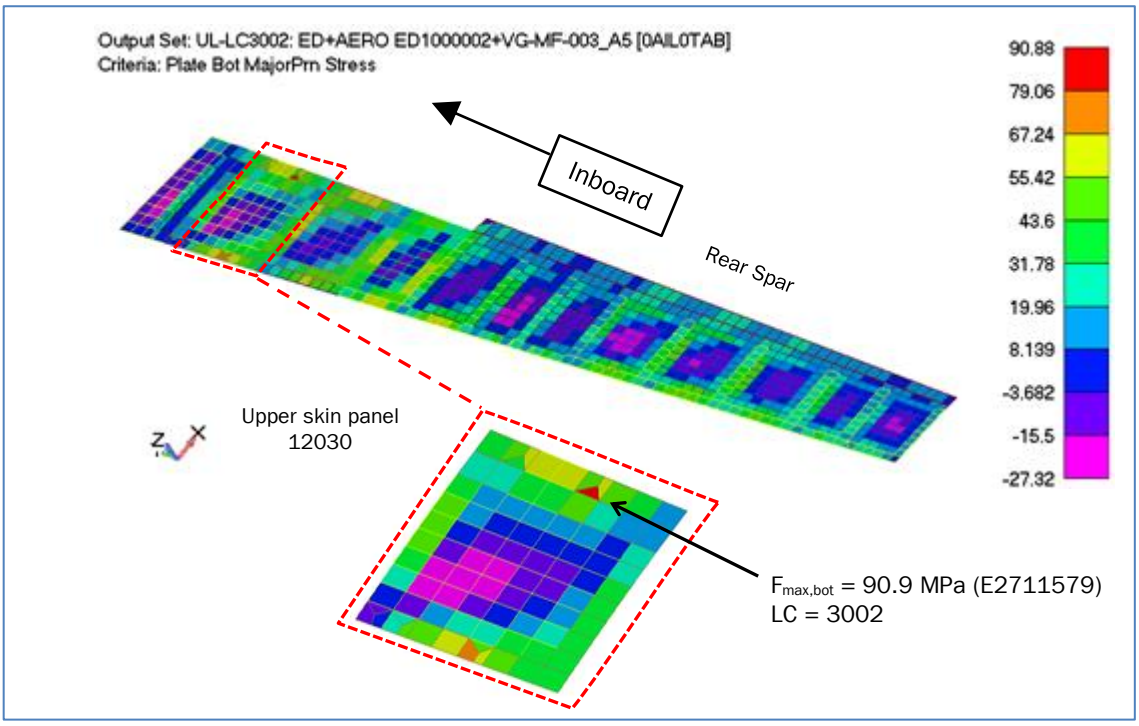

Figure 2-64 Upper skin, location of critical applied tension stress.

Compression Strength

Load Case	Minimum Principal Stress						
	Element Top Surface		Element Bot Surface		Allowable		RF
	Element Id.	Value MPa	Element Id.	Value MPa	Criteria	Value MPa	
2001	2073759	-21.2	2073734	-17.2			13.02
3002	2714500	-71.3	2714707	-60.7			3.87
3003	2711576	-80.1	2711100	-101.7			2.71
3054	2073734	-13.1	2073753	-9.5	Fcy	276.0	21.04
3055	2714537	-31.5	2713175	-26.0			8.76
4004	2714500	-68.5	2714707	-59.4			4.02
5005	2714500	-65.1	2712941	-55.9			4.24

Table 2-86 Upper skin, summary of compression (min principal) strength.

Critical compression load case	3002		
Critical Bay	3		
Critical ult. applied stress	Minor principal	-101.7 MPa	
Allowable stress	Fcy	276.0 MPa	2024-T3, B basis
RF = Fcy allow/Minor applied	276./101.7= 2.71		**RF = >2.00**

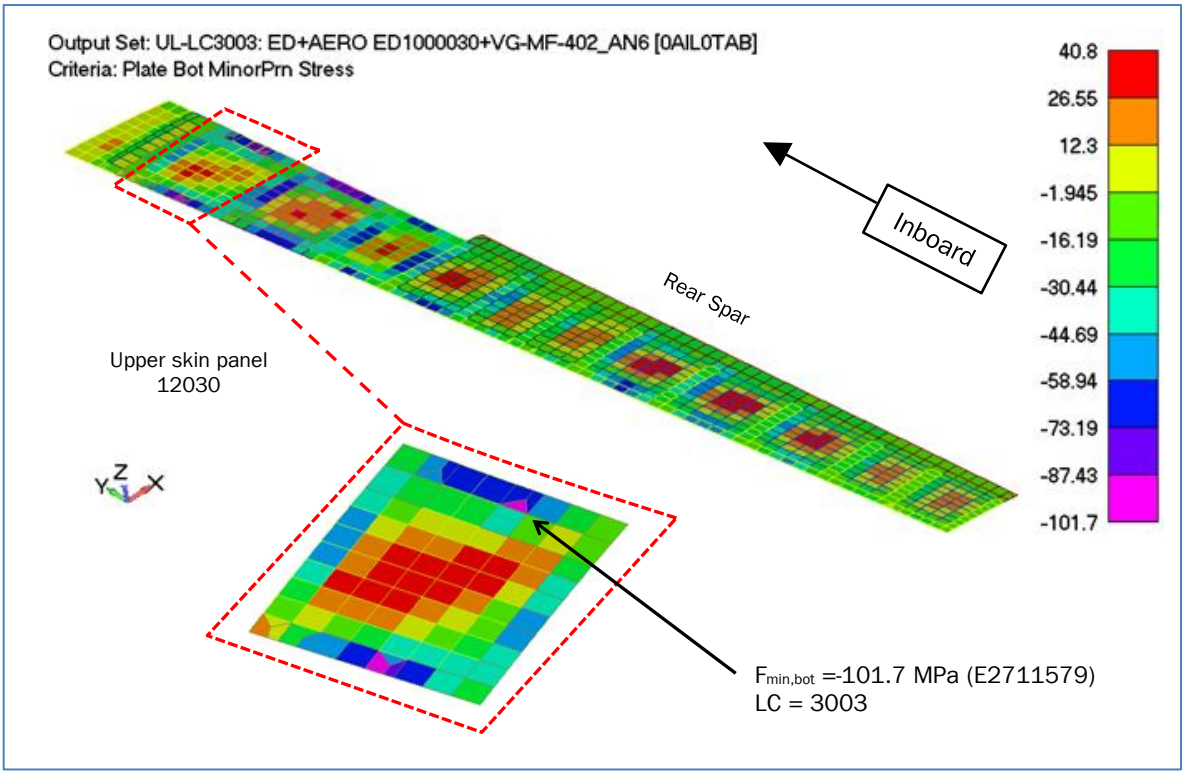

Figure 2-65 Upper skin, location of critical applied compression stress.

2.5.9.5 Buckling Analysis Details

Panel buckling analysis is performed using PESS *Analysis Panel* module.

- All edges are considered as simple supports

A buckling RF summary for all skin panels can be found at in Table 2-90.
The RF's presented do not include post buckling effects (where required). For skin post buckling see the following section 2.5.9.6.
The analysis exclusively uses PESS automated analysis. Only summary tables of input data, panel allowable and critical panel RF/load case are presented.

Summary of PESS Panel Geometry

Panel geometry is derived from FEM skin panel groups and the PESS FE Data module. A summary from the PESS panel report is given in Table 2-87; no benefit from increased land thickness has been taken. Additional geometry used in the analysis (fastener types, land thickness) can be found in Appendix E, Table 6-13, under the heading *Upper Skin, box zone.*

Bay	PANEL ID [-]	Panel Name (DFEM Group Name) [-]	Type [-]	Mat [-]	Edge Constraint [-]	Basic geometry a [mm]	b [mm]	t [mm]	r [mm]
1	12010	Uskin_box_PANEL_12010	Curved	1	SSSS	63.56	194.51	1.20	2340.92
2	12020	Uskin_box_PANEL_12020	Curved	1	SSSS	61.30	191.65	1.00	2379.56
3	12030	Uskin_box_PANEL_12030	Curved	1	SSSS	199.93	186.29	1.20	2516.92
4	12040	Uskin_box_PANEL_12040	Curved	1	SSSS	199.94	178.12	1.10	2791.53
5	12050	Uskin_box_PANEL_12050	Curved	1	SSSS	144.05	171.32	0.90	3163.60
6	12060	Uskin_box_PANEL_12060	Curved	1	SSSS	170.10	192.08	1.00	2847.28
7	12070	Uskin_box_PANEL_12070	Curved	1	SSSS	124.91	184.02	1.00	2934.47
8	12080	Uskin_box_PANEL_12080	Curved	1	SSSS	125.02	177.53	1.00	3124.52
9	12090	Uskin_box_PANEL_12090	Curved	1	SSSS	175.03	169.73	0.80	3446.53
10	12100	Uskin_box_PANEL_12100	Curved	1	SSSS	183.57	160.42	0.80	4057.46
11	12110	Uskin_box_PANEL_12110	Curved	1	SSSS	180.04	150.99	0.80	5247.93
12	12120	Uskin_box_PANEL_12120	Flat	1	SSSS	130.01	142.95	0.80	-
13	12130	Uskin_box_PANEL_12130	Flat	1	SSSS	132.67	136.08	0.80	-

Table 2-87 Upper box skin panel geometry (summary from PESS).

Summary of PESS Panel Buckling Allowables

The detail buckling check requested/performed by PESS are shown in Table 2-88. All buckling RF's are relative limit load.

Method	FC	Definition	Code	LL	UL
PSM	Buckling	Shear	0001	☑	☐
PSM	Buckling	Comp	0002	☑	☐
PSM	Buckling	Bending	0003	☑	☐
PSM	Buckling	Shear + Comp	0004	☑	☐
PSM	Buckling	Shear + Bending	0005	☑	☐
PSM	Buckling	Comp + Bending	0006	☑	☐
PSM	Buckling	Shear + Comp + Bending	0007	☑	☐
PSM	Strength	Hole Stress	0101	☐	☐
PSM	Strength	Permanent Buckling	0108	☑	☐

Table 2-88 PESS panel buckling requests for upper skin panels.

Bay	PANEL ID [-]	Standard allowables Ks [-]	Fscr [MPa]	Kc [-]	Fccr [MPa]	Kb [-]	Fbcr [MPa]	Pb [MPa]	Hole allowables Ksh/Ks [-]	kc [-]	kb [-]
1	12010	6.52	129.29	3.97	96.39	-	-	130.45	-	-	-
2	12020	6.55	111.20	4.00	72.60	-	-	114.49	-	-	-
3	12030	11.17	31.56	6.46	18.25	-	-	48.22	-	-	-
4	12040	10.63	27.61	6.21	16.14	-	-	46.63	-	-	-
5	12050	9.84	26.17	5.53	14.71	-	-	46.00	-	-	-
6	12060	10.98	25.85	6.18	14.54	-	-	45.83	-	-	-
7	12070	8.19	35.77	5.01	21.88	-	-	49.45	-	-	-
8	12080	8.32	36.28	4.94	21.53	-	-	49.51	-	-	-
9	12090	11.13	16.84	6.24	9.45	-	-	42.07	-	-	-
10	12100	9.88	16.74	5.68	9.63	-	-	42.02	-	-	-
11	12110	9.03	17.27	5.04	9.64	-	-	42.26	-	-	-
12	12120	7.77	22.18	4.10	8.75	25.29	53.96	44.32	-	-	-
13	12130	8.25	22.62	4.06	9.55	26.09	61.43	44.58	-	-	-

Table 2-89 Upper skin panel buckling parameters (summary from PESS).

Buckling RF Summary, All Panels/Load Cases

The buckling criteria for the LE upper skin is no buckling < limit load. This is indicated by a RF >1.0. For RF's > 1.5 no post buckling analysis is required.

Bay	PANEL ID [-]	LC ID [-]	Analysis type [-]	Load level [-]	RF [-]	Failure Mode	Buckling Criteria	Post Buckle Anaysis
1	12010	3002	Shear + Comp	100% LL	37.53	LL Buckling	PASS	No
2	12020	3002	Shear + Comp	100% LL	6.98	LL Buckling	PASS	No
3	12030	4004	Shear + Comp	100% LL	2.15	LL Buckling	PASS	No
4	12040	4004	Shear + Comp	100% LL	2.83	LL Buckling	PASS	No
5	12050	5005	Shear + Comp	100% LL	2.56	LL Buckling	PASS	No
6	12060	5005	Shear + Comp	100% LL	2.10	LL Buckling	PASS	No
7	12070	5005	Shear + Comp	100% LL	1.57	LL Buckling	PASS	No
8	12080	5005	Shear + Comp	100% LL	1.42	LL Buckling	PASS	YES
9	12090	5005	Shear + Comp	100% LL	1.24	LL Buckling	PASS	YES
10	12100	2001	Shear + Comp	100% LL	3.37	LL Buckling	PASS	No
11	12110	2001	Shear + Comp	100% LL	3.58	LL Buckling	PASS	No
12	12120	2001	Shear + Comp	100% LL	5.35	LL Buckling	PASS	No
13	12130	2001	Shear + Comp	100% LL	18.4	LL Buckling	PASS	No

Table 2-90 PESS buckling analysis RF summary all upper skin panels

Critical elastic buckling case: 5005
Critical Bay/Panel Id: Bay 9 – Panel Id 12090
Critical elastic buckling RF (relative to Limit) **RF = 1.24**

As can be seen in the previous table skin panels 12080 and 12090 buckle at < ultimate. An additional diagonal tension (DT) field analysis for these panels follows in section 2.5.9.6.

Expanded details for critical Bay 9 - panel Id 12090

Panel 12090 Loading

PANEL ID [-]	LC ID [-]	Fx [N/mm]	Fy [N/mm]	Fxy [N/mm]	Mx [Nmm/mm]	My [Nmm/mm]	LL factor [-]	UL factor [-]
12090	2001	0.03	-0.08	4.83	-	-	0.67	1.00
12090	3002	0.23	2.57	-10.05	-	-	0.67	1.00
12090	3003	6.52	-1.26	5.82	-	-	0.67	1.00
12090	3053	0.18	-0.09	0.25	-	-	0.67	1.00
12090	3054	-0.19	-0.10	0.38	-	-	0.67	1.00
12090	4004	-0.78	2.05	-10.21	-	-	0.67	1.00
12090	5005	-4.42	2.05	-11.65	-	-	0.67	1.00

Table 2-91 PESS loading for upper skin panel 12090 (summary from PESS).

Panel 12090 Buckling Results for Critical 5005

PANEL ID [-]	LC ID [-]	Analysis type [-]	Load level [-]	RF [-]
12090	5005	Shear	100% LL	1.73
12090	5005	Comp	100% LL	2.56
12090	5005	Bending	100% LL	NA
12090	5005	Shear + Comp	100% LL	1.24
12090	5005	Shear + Bending	100% LL	NA
12090	5005	Comp + Bending	100% LL	NA
12090	5005	Shear + Comp + Bending	100% LL	NA
12090	5005	Permanent Buckling	100% LL	4.33

Table 2-92 PESS RF for upper main skin panel/bay 9, critical LC5005 (summary from PESS)

Critical buckling is shear + compression interaction.

2.5.9.6 Post Buckling of Upper Skin Panels

Diagonal tension (DT) analysis for the upper main skin is performed in calculation file 2, sheet: U_Skin DT. The analysis follows PSM 5.3.5.6 method[29]. DT analysis is only applicable when panel buckling occurs at < ultimate load. A summary of DT applicability for panel/load case combinations is given in Table 2-93.

		DT Analysis Requirements												
	Panel Id	12010	12020	12030	12040	12050	12060	12070	12080	12090	12100	12110	12120	12130
Load Case	2001	NO	NO	NO	NO	NO	NO	NO	NO	NO	NO	NO	NO	NO
	3002	NO	NO	YES	NO	NO	NO	NO	NO	NO	NO	NO	NO	NO
	3003	NO	NO	NO	NO	NO	NO	NO	NO	NO	NO	NO	NO	NO
	3051	NO	NO	NO	NO	NO	NO	NO	NO	NO	NO	NO	NO	NO
	3052	NO	NO	NO	NO	NO	NO	NO	NO	NO	NO	NO	NO	NO
	3053	NO	NO	NO	NO	NO	NO	NO	NO	NO	NO	NO	NO	NO
	3054	NO	NO	NO	NO	NO	NO	NO	NO	NO	NO	NO	NO	NO
	3055	NO	NO	NO	NO	NO	NO	NO	NO	NO	NO	NO	NO	NO
	3056	NO	NO	NO	NO	NO	NO	NO	NO	NO	NO	NO	NO	NO
	4004	NO	NO	NO	NO	NO	NO	NO	NO	NO	NO	NO	NO	NO
	5005	NO	NO	YES	NO	NO	NO	NO	YES	YES	NO	NO	NO	NO

Table 2-93 Upper main skin diagonal tension analysis applicability.

The critical DT reserve factor for the upper skin is:

RF = 1.71
LC = 3002
Bay = 3 (see Figure 2-62)
Failure mode = Shear.

A worked example the critical panel load case combination is given below. Full details for all panels and load cases can be found in calculation file [2] sheets *U_Skin DT & PESSImport Skins.*

Material Data

	Skin	**F. Spar**	**R Spar**	**Rib**	
Type =	2024-T3, Sht	2124-T851,Plt	2024-T42, Sh	2024-T42, Sht	
Basis =	B	A	B	B	
F_{tu} =	441.	441.	427.	427.	MPa
F_{ty} =	296.	379.	262.	262.	MPa
F_{cy} =	276.	365.	283.	283.	MPa
F_{su} =	276.	255.	255.	255.	MPa
E =	72400.	71710.	72400.	72400.	MPa
E_{c} =	73800.	75200.	73800.	73800.	MPa
v =	0.33	0.33	0.33	0.33	

Geometry Data

Panel		F Spar		R Spar	
t_{panel}	= 1.2 mm	t_{flg}	= 1.70 mm	t_{flg}	= 1.00 mm
$t_{pad\ up}$	= 1.3 mm				
$a_{(span)}$	= 199.7 mm	w_{flg}	= 28.0 mm	w_{flg}	= 20.0 mm
$b_{(rib)}$	= 185.9 mm	I_{flg}	= 3110. mm^4	I_{flg}	= 667. mm^4
Radius	= 2517. mm				

Inboard Rib		Outboard Rib		"Analysis" Rib	
t_{flg}	= 1.30 mm	t_{flg}	= 1.00 mm	t_{flg}	= 1.00 mm

[29] PESS DT analysis module is applicable to a fuselage curved multiple panel arrangement. The aileron skins are essentially flat and not bounded on all sides by other panels.

b_{flg}	= 15.1 mm	b_{flg}	= 14.5 mm	b_{flg}	= 14.5 mm
$t_{skin\ pad\text{-}up}$	= 1.30	$t_{skin\ pad\text{-}up}$	= 1.30 mm	$t_{skin\ pad\text{-}up}$	= 1.30 mm
A_{cap}	= 19.6 mm²	A_{cap}	= 14.5 mm²		

PSM method assumes identical geometry for boundary ribs. Rib values used in the calculation = "Analysis" Rib.

Loading
LC 3002 ED+AERO ED1000002+VG-MF-003_A5 [0ail0tab]

Panel/Bay 3 PESS group: *Uskin_box_PANEL_12030*

As a running load		As a stress		
Fx	= -2.25 N/mm	σ_x = Fx/ t_{panel} = -2.25/1.2	= -1.11	MPa
Fy	= -4.72 N/mm	σ_y = Fy/ t_{panel} = -4.72/1.2	= -3.93	MPa
Fxy	= -44.36 N/mm	τ = Fxy/ t_{panel} = -44.36/1.2	= -36.7	MPa
Mbx	= -			
Mby	= -			

Rib 2 (Inboard) PESS group: RibUC_box_STRINGER_36020
P_{cap} = -414.3 N.
Rib 3 (Outboard) PESS group: RibUC_box_STRINGER_36030
P_{cap} = -97.7 N.

Buckling Allowables

Panel/Bay 3 PESS group: *Uskin_box_PANEL_12030*
From calculation file [2] (PESS)

kc = 6.46
ks = 11.17
kb = -
Fc_{cr} = 18.3 MPa
Fs_{cr} = 31.6 MPa
Fb_{cr} = -

Buckling Interactions

Ultimate Loads

Rc = applied/allow	= 1.11/18.3	0.1028
Rs = applied/allow	= 3.93/31.6	1.1713

Ref. PSM 5.3.5.6 para 6
$Rc + Rs^2$ = 1.475 >1.0, therefore buckling below ult, DT analysis required.

Limit Loads
Factoring ultimate ratios by 1/SF (1/1.5)
Rc = 0.0685
Rs = 0.781
$Rc + Rs^2$ = 0.678 <1.0, therefore no buckling above limit load.

Methodology Limitations
Ref. PSM 5.3.5.6 para 7.1

tu/t = t_{flg}/t_{panel} = 1.20/1.00	= 0.83	>0.6 PASS
b/a = $b_{(rib)}/a_{(span)}$ = 185.9/199.7	= 0.93	<1.0 PASS
a/t = $a_{(span)}$/ t_{panel} = 199.7/1.2	= 166.4	<200.0 FAIL

Panel fails limitation check Minimum RF must be >1.2

Diagonal Tension Factor k

$R'_a = R'_s * R_c / R_s$ 1.0*0.0685/0.781 = 0.0877

$$K_{corr} = \frac{-R'_a + \sqrt{R'^2_a + 4}}{2}$$ = (-0.0877+sqrt(0.0877^2 + 4))/2 = 0.957 [PSM5.3.5.6 Eq 1]

$$F_{s,cr,corr} = K_{corr} F_{s,cr}$$ .957*31.6 = 30.2 [PSM5.3.5.6 Eq 2]

$$k = Tanh\left\{0.5\log_{10}\left(\frac{f_{su}}{F_{s,cr,corr}}\right)\right\}$$ = Tanh(0.5*$\log_{10}$(276/30.2)) = 0.447 [PSM5.3.5.6 Eq 6]

Rib Flange Stress due to DT

PSM 5.3.5.6 method assumes the panel being analysed is bounded by two upright stiffeners and two caps. For the aileron panels, ribs are equivalent to the upright stiffeners and spars equivalent to the caps. This section will calculate the effects of DT on the ribs (uprights).

The C section rib will be divided into two angle form "uprights", one for the upper skin and one for the lower. The arrangement is shown in Figure 2-66. The depth of the rib web typically varies from 60 to 20 mm; an angle section of 12*12*t_{rib} will be assumed for all panel uprights. This assumption is conservative in that the PSM method assumes the uprights have a "free-edge" whereas the assumed equivalents do not.

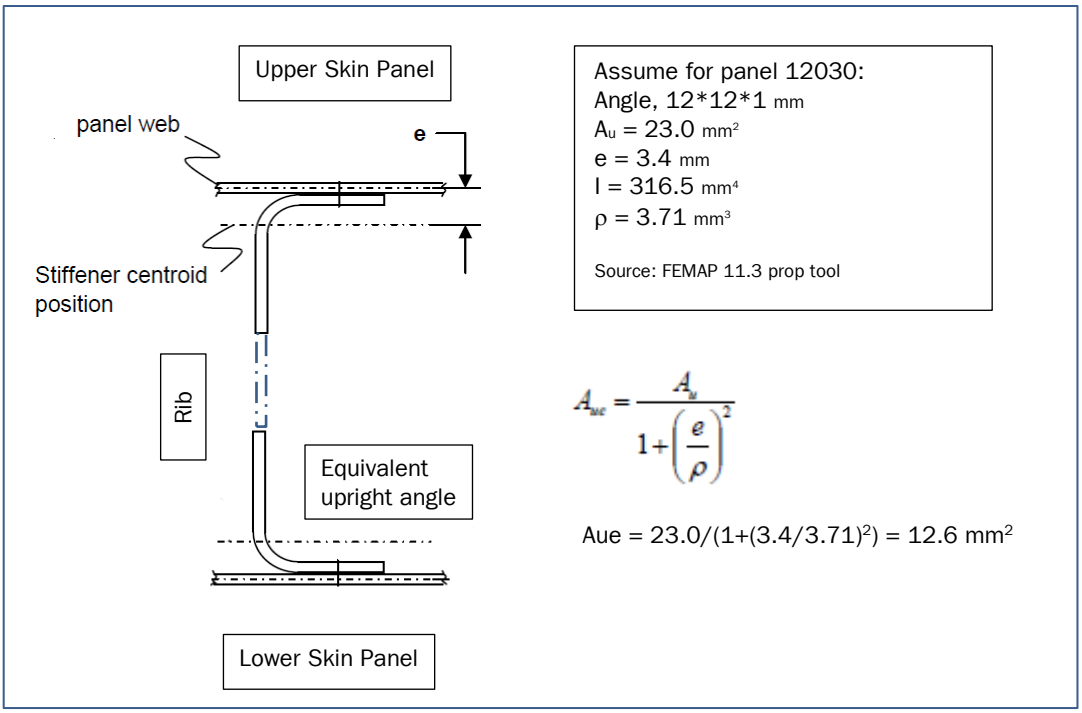

Figure 2-66 Arrangement of panel "upright" stiffeners.

Assume panels are shear dominated:

$\alpha = 45°$ $Tan(\alpha) = 1.0$

Average compression in rib flange due to DT is:

$$f_u = \frac{k \cdot f_s \cdot Tan\alpha}{\frac{A_{ue}}{a \cdot t} + 0.5 \cdot (1-k)}$$ (0.447*36.97)*1.0/(12.6/(199.7*1.2)+0.5*(1-.447)) = 50.1 MPa

Maximum compression in the rib flange due to DT is:

Ref PSM 5.3.5.6 fig 10 conservatively assume D/hu =0.0

For k = 0.447 $fu_{max}/fu = 1.43$

$f_{u,max} = 1.43*45.1 = 64.5$ MPa

Natural Crippling

Natural crippling is the term used to describe crippling of the cap/flange when subject to pre-buckled load + DT load[30].

The pre-buckled cap load/stress is taken from the rib PESS analysis. The most adverse of in & outboard values are used.

Inboard: P_{cap} = -414.3 N. A_{cap} = 19.6 mm² f_{cap} = -21.1 MPa
Outboard: P_{cap} = 97.7 N. A_{cap} = 14.5 mm² f_{cap} = 6.7 MPa

Hence $f_{nat,crip} = f_{cap} + f_{u,max}$ = -21.1-64.5 = 85.6 MPa Inboard rib is critical

Allowable for natural crippling is the regular section crippling given in Ref. PSM 5.3.4.3

Rib material[31] = 2024 T42 sheet Fcy = 290 MPa Ec = 73800 MPa

Conservatively assume 1 free edge for equivalent section, ∴ Ki = 0.41 see Figure 2-66

$$x_i = \frac{b_{i,eff}}{t_i}\sqrt{\frac{F_{cy}}{K_i E_c}}$$ 15.1/1.3*sqrt(290/(0.41*73800)) = 1.137

$$y_i = \frac{0.78}{x_i}$$ 0.78/1.137 = 0.686

$F_{cc,i} = y_i F_{cy}$ 0.689*290 = 198.9 MPa

Hence $RF = Fcc/f_{nat,crip}$ = 198.9/85.6 = **RF = >2.00**

Minimum RF policy for this calculation is = 1.2

[30] The PSM method assumes adjacent panels are equally buckled.
[31] Material L direction for consistency with PESS. Typically this report uses minimum of L & LT.

Forced Crippling Fcc.f

$$F_{cc,f} = 0.051 \frac{F_{cy}}{\sqrt{\frac{F_{cy}}{E_c} + 0.002}} k^{2/3} \left(\frac{\sqrt{t_u^2 + (t_{pu} - t)^2}}{t} \right)^{1/3}$$

Fcc.f = 0.051*[290/SQRT(290/73800+.002)]*0.447$^{0.667}$*[sqrt(1.0^2+(1.3-1.2)^2)/1.2]$^{0.33}$

Fcc.f = 112.4 MPa

Hence RF = $F_{cc.f}/f_{u.max}$ = 112.4/64.5 **RF = 1.74**

Minimum RF policy for this calculation is = 1.2

Front and Rear Spar Cap Stress due to DT

From inspection of the structural assembly, additional end loads due to DT are more critical for the rear spar.

Loading: 5005 ED+AERO ED1000002+VG-MF-003_A5 [0ail0tab]

Diagonal tension factor k = 0.591
A_{cap} = 18*0.8 = 14.0 mm^2 Front and rear spars caps dissimilar, conservative low value used.

Panel: width b = 124.8 mm
thickness = 0.8 mm

Compression in caps due to DT

$$f_{cap,DT} = \frac{k \cdot f_s \, Cot\alpha}{\frac{2 \cdot A_{cap}}{b \cdot t} + 0.5 \cdot (1-k)}$$ PSM 5.3.5.6 Eq. 10

Numerator 0.591*(-14.56)*Cot(0.733) = -9.56

Denominator (2*14.0/(124.8*0.8)+0.5*(1-0.591)) = 0.405

$f_{cap,DT}$ = -9.56/0.405 = -23.60 MPa

Ctitical end load P, from either front or rear spar cap = 255.0 N.
f_{cap} = 255/14.0 = 18.2 MPa

$f_{cap,total} = f_{cap,DT} + f_{cap}$ = 23.6+18.2 = 41.8 MPa

Crippling allowable for assumed (A_{cap}) rear spar section 18*0.8

$$x_i = \frac{b_{i,eff}}{t_i}\sqrt{\frac{F_{cy}}{K_i E_c}}$$ = (18/0.8)*SQRT(283.0/(0.41*73800)) = 2.18

$$y_i = \frac{0.69}{x_i^{0.75}}$$ = $0.69/2.18^{0.75}$ = 0.385

$F_{cc,i} = y_i F_{cy}$ = 0.385*283 = 109.0 MPa

RF = $F_{cc}/f_{cap,total}$ = 109./41.8 = 2.61 **RF = >2.0**

Fastener Loading due to Diagonal Tension

Load Case: 5005,Bay 9 , PESS panel Id .12090
Total fastener load is

$$w_{cap} = f_s \cdot t \cdot (1 + 0.414 \cdot k) \quad \text{N/mm}$$ PSM 5.3.5.6 Eq. 18

= 31.09*0.8*(1+0.414*0.591) = 31.0 N/mm

Component due to DT

$W_{cap,DT}$ = f_s*t*(0.414*k) = 31.09*0.8*(0.414*.591) = 6.09 N/mm

The DT component is then added to the fastener loading found from PESS edge loads.

Load Case: 5005		PESS Edge 1 Loading							
Ultimate Loads		Running Load (DFEM)				Running Load (DT)	Running Load Total		
PANEL ID	Span "a"	Fy	Fxy	Mby	$Fx_{(Mby)}$	Resultant	Fy	Fxy	Fres
[-]	mm	N/mm		N mm/mm	N/mm	N/mm	N/mm		
12010	63.5	-0.17	0.187	-	0.000	0.000	0.174	0.187	0.255
12020	61.2	-6.32	28.305	-	0.000	0.000	6.324	28.305	29.002
12030	199.7	-2.67	23.925	-	0.000	0.000	2.674	23.925	24.074
12040	199.7	0.07	18.827	-	0.000	0.000	0.071	18.827	18.828
12050	143.9	-1.11	18.877	-	0.000	0.000	1.111	18.877	18.910
12060	169.9	-1.33	23.660	-	0.000	0.000	1.326	23.660	23.698
12070	124.8	-0.56	24.707	-	0.000	0.000	0.561	24.707	24.713
12080	124.9	-3.01	7.318	-	0.000	6.010	9.022	7.318	13.924
12090	174.8	-0.03	3.183	-	0.000	6.087	0.028	3.183	9.270
12100	183.4	-0.59	5.590	-	0.000	0.000	0.591	5.590	5.621
12110	179.8	-0.56	5.927	-	0.000	0.000	0.559	5.927	5.954
12120	124.1	-1.26	12.035	-	0.000	0.000	1.255	12.035	12.101
12130	132.5	0.07	-0.682	-	0.000	0.000	0.073	-0.682	0.686

Panel Web Maximum Shear Stress

$$f'_{s,max} = f_s \cdot (1 + k^2 \cdot C_1) \cdot (1 + k \cdot C_2)$$

$$C_1 = \frac{1}{Sin 2\alpha} - 1$$ C1 = 1/sin(2*42°) -1 = 0.995

Assume a conservative value for I_{up} & I_{low} = 500 mm^4 (Inertia of front & rear spar)

$$\omega d = 0.7 \cdot a \cdot \left(\frac{t}{(I_{up} + I_{low}) \cdot b} \right)^{0.25}$$ $0.7*199.7*(1.2/(1000*185.9)^{0.25}$ = 7.05

Extrapolate C2 from curve below. Assume a straight line after wd = 3.0

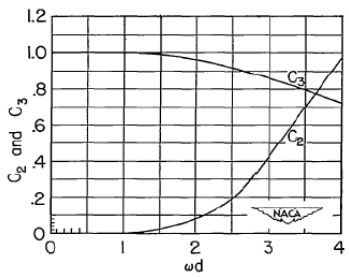

C2 = C2 = 0.552*wd - 1.237 = 2.65

Hence max applied shear stress is:

$f'_{s.max}$ = 36.97*(1+0.447^2*0.0)*(1+.447*2.65) = 80.76 MPa

Allowable is determined by factoring PSM 5.3.5.6 figure 14 by ratio of actual Ftu and figure Ftu

For the upper skin Ftu = 441 MPa = 64.0 ksi (2024-T3 sheet)

As a conservative simplification, determine allowable with k = 0.5 and alpha = 35°

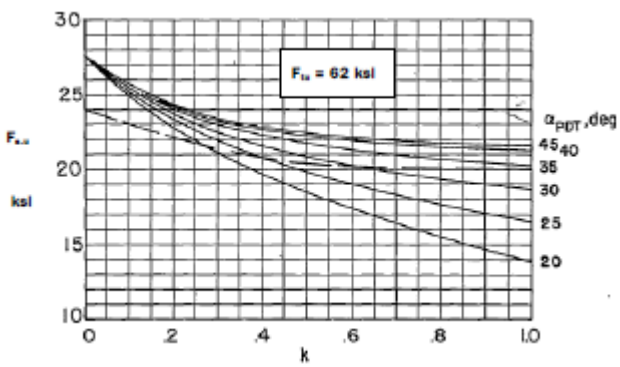

from figure F_{SU} = 20 ksi = 137.9 MPa

Hence
F_{SU} = 20*(64/62) = 20.65 ksi = 142.3 MPa

RF shear web = F_{SU}/ $f'_{s.max}$ = 142.3/80.76 = **RF = 1.76**
Minimum RF policy for this calculation is = 1.2

2.5.9.7 Joint with Front spar

The upper main skin is attached to the front spar upper aft flange cap via a single row of blind fasteners. Skin lands at the front spar are shown in Figure 2-67. Joint geometry details and allowables are given in the Table 2-94.

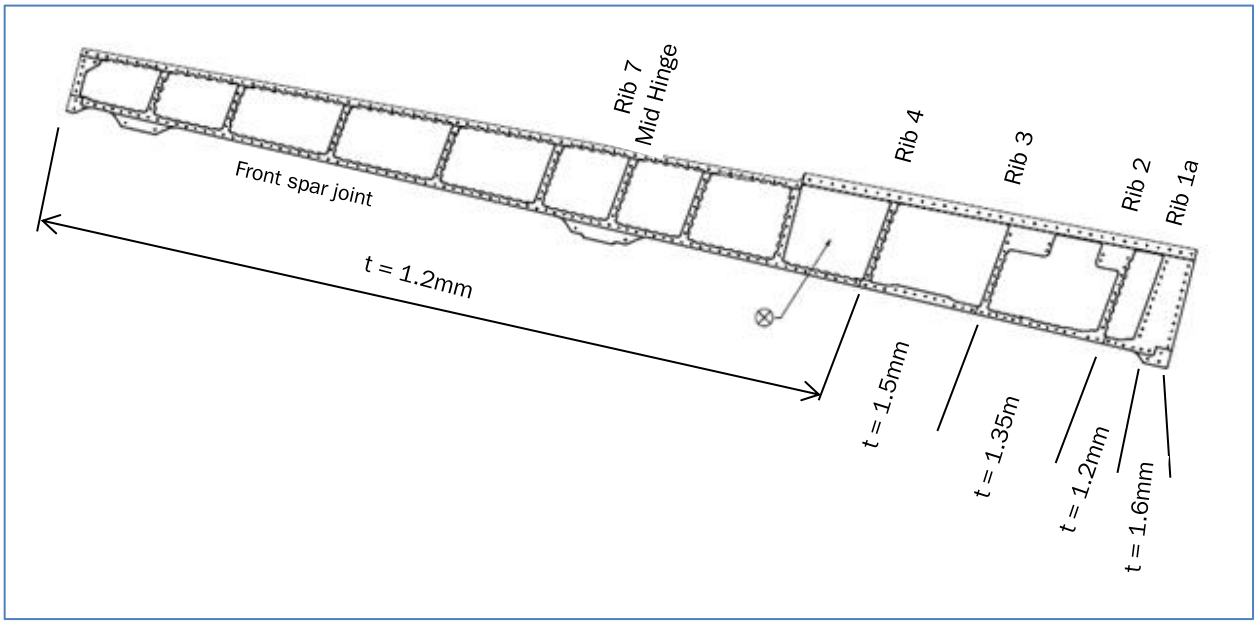

Figure 2-67 Upper main skin, details of land thickness at the front spar joint

Joint to Front Spar Summary of Allowables

Bay	PANEL ID [-]	Fastener Details				Shear Allow	Skin Bearing Allowable			Spar Bearing Allowable			Allowable Flux		
		Type	Dash No.	Dia	No	/Fastener	tskin	Mat_{skin}	/Fastener	tspar	Mat_{spar}	/Fastener	Shear	Bearing	Mode
				mm		N.	mm		N.	mm		N.	N/mm	N/mm	
1	12010	CR3224	4	3.2	2	2565	1.60	2024-T3	1680	1.70	2124-T851	1765	80.82	52.93	Bearing
2	12020	CR3224	4	3.2	3	2565	1.20	2024-T3	1260	1.70	2124-T851	1765	125.69	61.74	Bearing
3	12030	CR3224	4	3.2	12	2565	1.35	2024-T3	1402	1.70	2124-T851	1765	154.14	84.24	Bearing
4	12040	CR3224	4	3.2	11	2565	1.50	2024-T3	1575	1.20	2124-T851	1260	141.29	69.40	Bearing
5	12050	CR3224	4	3.2	8	2565	1.20	2024-T3	1260	1.10	2124-T851	1148	142.62	63.80	Bearing
6	12060	CR3224	4	3.2	9	2565	1.20	2024-T3	1260	1.00	2124-T851	1035	135.86	54.82	Bearing
7	12070	CR3224	4	3.2	7	2565	1.20	2024-T3	1260	1.20	2124-T851	1260	143.90	70.68	Bearing
8	12080	CR3224	4	3.2	7	2565	1.20	2024-T3	1260	1.20	2124-T851	1260	143.78	70.62	Bearing
9	12090	CR3224	4	3.2	10	2565	1.20	2024-T3	1260	1.00	2124-T851	1035	146.71	59.19	Bearing
10	12100	CR3224	4	3.2	10	2565	1.20	2024-T3	1260	1.00	2124-T851	1035	139.89	56.44	Bearing
11	12110	CR3224	4	3.2	10	2565	1.20	2024-T3	1260	1.00	2124-T851	1035	142.63	57.55	Bearing
12	12120	CR3224	4	3.2	7	2565	1.20	2024-T3	1260	1.00	2124-T851	1035	144.72	58.39	Bearing
13	12130	CR3224	4	3.2	7	2565	1.20	2024-T3	1260	1.00	2124-T851	1035	135.50	54.67	Bearing

Table 2-94 Upper main skin, details of fasteners, land thickness and allowables at the front spar joint.

Loading for the joint is extracted from the DFEM's [3] to [6] via the PESS FE data module. Panel loads are exported from PESS as an Excel file[32]. Panel loads from this (intermediate) loading file are then imported to calculation file [2] and processed. Key points in this process are:

- PESS FE Data extraction with recovery method: FBD + SC
- The edge loads are averages along each side.
- Additional loads from diagonal tension are included.

[32] Calc files [201] to [208]

Summary of RF's for the Upper Box Skin to Front Spar Joint

Bay	PANEL ID	Active LC	Reserve Factor vs Load Case Id							Upper Skin - Front Spar Joint			
										PANEL ID	Critcal RF's		
	[-]	3002	2001	3002	3003	3053	3054	4004	5005	[-]	LC	Mode	RF
1	12010	46.00	27.74	46.00	97.75	19.89	20.11	62.46	207.17	12010	3053	Bearing	19.89
2	12020	1.57	2.49	1.57	2.39	17.94	16.82	1.71	2.12	12020	3002	Bearing	1.57
3	12030	3.82	6.58	3.82	4.19	80.69	94.11	3.47	3.49	12030	4004	Bearing	3.47
4	12040	3.71	9.75	3.71	5.35	89.25	62.76	3.63	3.68	12040	4004	Bearing	3.63
5	12050	3.41	9.02	3.41	5.36	91.85	74.25	3.36	3.37	12050	4004	Bearing	3.36
6	12060	2.39	7.05	2.39	4.17	356.45	220.93	2.41	2.31	12060	5005	Bearing	2.31
7	12070	2.87	9.13	2.87	5.16	65.79	69.80	2.94	2.86	12070	5005	Bearing	2.86
8	12080	11.36	13.68	11.36	13.15	257.75	196.66	9.57	5.07	12080	5005	Bearing	5.07
9	12090	23.50	18.77	23.50	25.88	1746.51	903.86	18.01	6.38	12090	5005	Bearing	6.38
10	12100	11.93	17.05	11.93	28.30	1580.77	352.20	11.16	10.04	12100	5005	Bearing	10.04
11	12110	10.18	19.12	10.18	68.63	405.33	134.59	10.37	9.66	12110	5005	Bearing	9.66
12	12120	4.70	12.23	4.70	47.76	520.83	92.52	5.15	4.82	12120	3002	Bearing	4.70
13	12130	52.58	36.53	52.58	182.99	4278.13	870.55	249.92	79.67	12130	2001	Bearing	36.53

Table 2-95 Upper main skin joint to front spar, RF summary.

Critical load case: 3002
Critical Bay/Panel id. Bay 2, Panel id. 12020
Critical RF: Joint is bearing critical **RF = 1.57**

Expanded details for critical, LC 3002, Bay 2/Panel Id 12020

Load Case: 3002 Ultimate Loads		PESS Edge 1 Loading								RF	Mode
		Running Load (DFEM)				Running Load (DT)	Running Load Total				
PANEL ID	Span "a"	Fy	Fxy	Mby	$Fx_{(Mby)}$	Resultant	Fy	Fxy	Fres		
[-]	mm	N/mm		N mm/mm	N/mm	N/mm	N/mm				
12010	63.5	-0.53	1.022	-	0.000	0.000	0.529	1.022	1.150	46.00	Bearing
12020	61.2	-8.09	38.338	-	0.000	0.000	8.088	38.338	39.182	1.57	Bearing
12030	199.7	-2.18	21.945	-	0.000	0.000	2.179	21.945	22.053	3.82	Bearing
12040	199.7	0.95	18.644	-	0.000	0.000	0.953	18.644	18.668	3.71	Bearing
12050	143.9	-0.82	18.679	-	0.000	0.000	0.817	18.679	18.697	3.41	Bearing
12060	169.9	-0.95	22.830	-	0.000	0.000	0.945	22.830	22.850	2.39	Bearing
12070	124.8	-0.34	24.562	-	0.000	0.000	0.337	24.562	24.564	2.87	Bearing
12080	124.9	-2.25	5.791	-	0.000	0.000	2.247	5.791	6.212	11.36	Bearing
12090	174.8	0.30	2.501	-	0.000	0.000	0.303	2.501	2.519	23.50	Bearing
12100	183.4	-0.05	4.728	-	0.000	0.000	0.052	4.728	4.728	11.93	Bearing
12110	179.8	-0.09	5.650	-	0.000	0.000	0.087	5.650	5.650	10.18	Bearing
12120	124.1	-0.89	12.381	-	0.000	0.000	0.894	12.381	12.413	4.70	Bearing
12130	132.5	0.19	-1.023	-	0.000	0.000	0.186	-1.023	1.040	52.58	Bearing

Table 2-96 Upper main skin joint to front spar, RF's for critical load case 3002

Worked Example for Panel 12020

Critical load case:	3002	
Skin panel to spar joint is:	PESS edge 1	see Figure 2-63
Length of edge 1:	61.2 mm	
Edge total load Fy:	-495.2 N	End load from calc. file [206]
Edge running load Fy:	495.2/61.2	= 8.09 N./mm
Edge total load Fxy:	2347.4 N	Shear load from calc. file [206]
Edge running load Fxy:	2347.4/61.2	= 38.3 N./mm
Edge running load from Diagonal Tension:		= 0.0 N/mm
Edge resultant running load	SQRT($8.09^2 + 38.3^2$)	= 39.2 N./mm

Fastener details for the skin/cap from Figure 2-76

Fastener type:	CR3224	C'sk head, blind fastener
Dia:	3.2mm	
Number of fasteners along edge:	3	
Fastener shear allow:	2565. N.	
Bearing allow. in skin:	1260. N.	2024-T3, t= 1.2 mm
Bearing allow. in spar:	1765. N.	2124-T851, t= 1.7 mm
Allowable flux:	3*1260/61.2	= 61.8 N/mm

RF = Allowable flux/Applied flux

= 61.8/39.2 **RF = 1.57**

2.5.9.8 Joint with Rear Spar

The upper main skin is attached to the rear spar upper flange cap via a single row of blind fasteners. Skin lands at the rear spar are shown in Figure 2-68. Joint geometry details and allowables are given in Table 2-97.

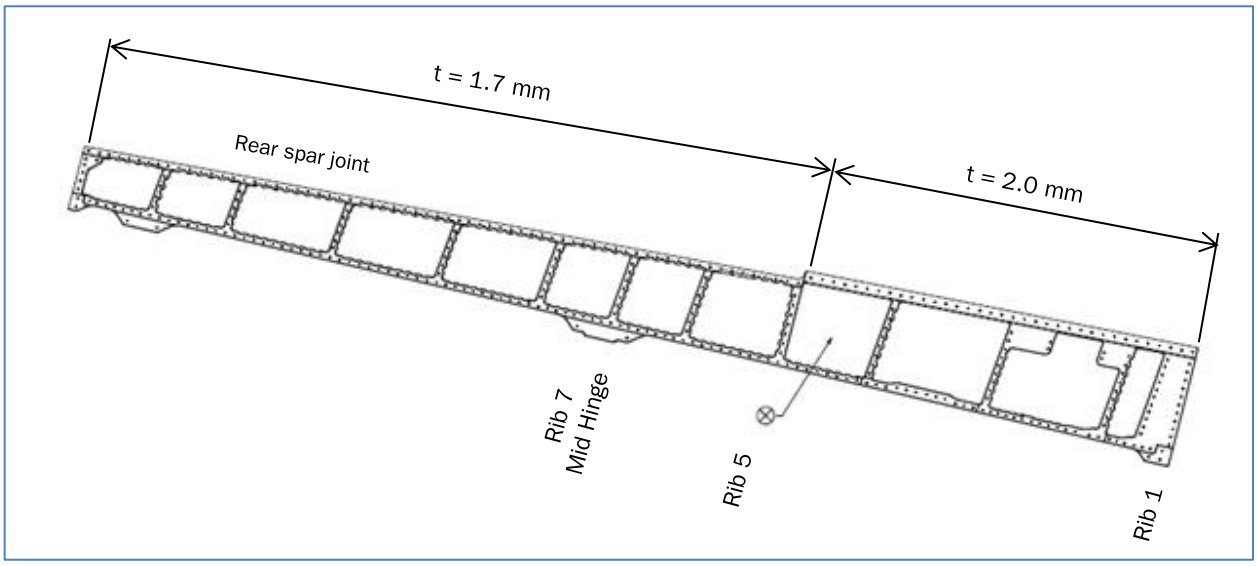

Figure 2-68 Upper main skin, details of land thickness at the rear spar joint

Fastener, thickness and allowable data at the joint with the rear spar is given in the Table 2 92.

Joint to Rear Spar Summary of Allowables

Ultimate Loads														
PANEL ID	Fastener Details				Shear Allow	Skin Bearing Allowable			Spar Bearing Allowable			Allowable Flux		
[-]	Type	Dash No.	Dia	No	/Fastener	tskin	Mat_{skin}	/Fastener	tspar	Mat_{spar}	/Fastener	Shear	Bearing	Mode
			mm		N.	mm		N.	mm		N.	N/mm	N/mm	
12010	NAS1097	4	3.2	1	1730	2.00	2024-T3	Shear Crt	1.00	2024-T42	1700	27.25	26.78	Bearing
12020	NAS1097	4	3.2	3	1730	2.00	2024-T3	Shear Crt	1.00	2024-T42	1700	84.77	83.30	Bearing
12030	NAS1097	4	3.2	10	1730	2.00	2024-T3	Shear Crt	1.00	2024-T42	1700	86.63	85.12	Bearing
12040	NAS1097	4	3.2	9	1730	2.00	2024-T3	Shear Crt	1.00	2024-T42	1700	77.96	76.61	Bearing
12050	NAS1097	4	3.2	8	1730	2.00	2024-T3	Shear Crt	1.00	2024-T42	1700	96.19	94.52	Bearing
12060	CR3224	4	3.2	7	2950	1.70	2024-T3	1765	0.80	2024-T42	750	121.52	30.90	Bearing
12070	CR3224	4	3.2	6	2950	1.70	2024-T3	1765	0.80	2024-T42	750	141.84	36.06	Bearing
12080	CR3224	4	3.2	6	2950	1.70	2024-T3	1765	0.80	2024-T42	750	141.73	36.03	Bearing
12090	CR3224	4	3.2	9	2950	1.70	2024-T3	1765	0.80	2024-T42	750	151.85	38.61	Bearing
12100	CR3224	4	3.2	9	2950	1.70	2024-T3	1765	0.80	2024-T42	750	144.78	36.81	Bearing
12110	CR3224	4	3.2	9	2950	1.70	2024-T3	1765	0.80	2024-T42	750	147.63	37.53	Bearing
12120	CR3224	4	3.2	6	2950	1.70	2024-T3	1765	0.80	2024-T42	750	142.65	36.27	Bearing
12130	CR3224	4	3.2	7	2950	1.70	2024-T3	1765	0.80	2024-T42	750	155.82	39.62	Bearing

Table 2-97 Upper main skin, details of fasteners, land thickness and allowables at the rear spar joint.

Loading for the joint is extracted from the FEM's [3] to [6] via the PESS FE data module. Panel loads are exported from PESS as a Excel file[33]. Panel loads from this (intermediate) loading file are then imported to calculation file [2] and processed. Key points in this process are:

- PESS FE Data extraction with recovery method: FBD + SC
- The edge loads are averages along each side.
- Additional loads from diagonal tension are included.

[33] Calc files [201] to [208]

Summary of RF's for Upper Box Skin to Rear Spar Joint

										Upper Skin - Rear Spar Joint			
Bay	PANEL ID	Active LC	Joint Ultimate Reserve Factor vs Load Case Id							PANEL ID	Critcal RF's		
	[-]	5005	2001	3002	3003	3053	3054	4004	5005	[-]	LC	Mode	RF
1	12010	8.45	11.88	7.95	28.21	10.88	11.07	7.62	8.45	12010	4004	Bearing	7.62
2	12020	5.61	14.19	4.99	6.73	31.89	31.25	5.26	5.61	12020	3002	Bearing	4.99
3	12030	2.98	6.74	2.69	4.21	65.38	55.97	2.75	2.98	12030	3002	Bearing	2.69
4	12040	3.71	7.75	3.37	5.50	65.05	77.43	3.39	3.71	12040	3002	Bearing	3.37
5	12050	6.12	10.94	5.91	8.83	197.36	343.67	5.56	6.12	12050	4004	Bearing	5.56
6	12060	4.04	5.38	4.42	4.51	97.97	125.46	3.70	4.04	12060	4004	Bearing	3.70
7	12070	3.15	5.25	3.47	5.20	187.85	249.99	3.14	3.15	12070	4004	Bearing	3.14
8	12080	1.45	5.02	2.15	3.28	329.85	251.11	2.14	1.45	12080	5005	Bearing	1.45
9	12090	1.62	6.32	2.47	4.60	242.81	102.06	2.52	1.62	12090	5005	Bearing	1.62
10	12100	3.16	8.61	3.79	7.20	1805.95	277.64	3.83	3.16	12100	5005	Bearing	3.16
11	12110	6.38	13.06	8.79	15.06	996.68	277.89	8.12	6.38	12110	5005	Bearing	6.38
12	12120	9.25	14.15	12.85	22.54	746.04	192.44	11.35	9.25	12120	5005	Bearing	9.25
13	12130	353.78	26.50	47.03	50.21	2452.78	868.59	139.36	353.78	12130	2001	Bearing	26.50

Table 2-98 Upper skin joint to rear spar, RF summary

Critical load case: 5005
Critical Bay/Panel id. Bay 8, Panel id. 12080
Critical RF: Joint is bearing critical **RF = 1.45**

Expanded details for critical, LC 5005, Bay 8/Panel Id 12080

Load Case: 5005		PESS Edge 3 Loading									
Ultimate Loads		Running Load (DFEM)				Running Load (DT)	Running Load Total			RF	Mode
PANEL ID	Span	Fy	Fxy	Mby	$Fx_{(Mby)}$	Resultant	Fx	Fxy	Fres		
[-]	a	N/mm		N mm/mm	N/mm	N/mm	N/mm				
12010	63.5	-0.2	-3.2		0.000	0.000	0.17	-3.161	3.166	8.45	Bearing
12020	61.2	-6.3	-13.4		0.000	0.000	6.32	-13.429	14.843	5.61	Bearing
12030	199.7	-2.7	-28.4		0.000	0.000	2.67	-28.368	28.494	2.98	Bearing
12040	199.7	0.1	-20.6		0.000	0.000	0.07	-20.637	20.637	3.71	Bearing
12050	143.9	-1.1	-15.4		0.000	0.000	1.11	-15.384	15.424	6.12	Bearing
12060	169.9	-1.3	-7.5		0.000	0.000	1.33	-7.529	7.645	4.04	Bearing
12070	124.8	-0.6	-11.4		0.000	0.000	0.56	-11.433	11.447	3.15	Bearing
12080	124.9	-3.0	-18.6		0.000	6.010	3.01	-18.577	24.830	1.45	Bearing
12090	174.8	0.0	-17.7		0.000	6.087	0.03	-17.707	23.793	1.62	Bearing
12100	183.4	-0.6	-11.6		0.000	0.000	0.59	-11.622	11.637	3.16	Bearing
12110	179.8	-0.6	-5.9		0.000	0.000	0.56	-5.855	5.881	6.38	Bearing
12120	124.1	-1.3	-3.7		0.000	0.000	1.26	-3.713	3.920	9.25	Bearing
12130	132.5	0.1	-0.1		0.000	0.000	0.07	-0.085	0.112	353.78	Bearing

Table 2-99 Upper main skin joint to rear spar, RF's for critical load case 5005

Worked Example for Panel 12080

Critical load case: 5005
Skin panel to spar joint is: PESS edge 3 see Figure 2-63
Length of edge 3: 124.8 mm

Edge total load Fy: -376.1 N End load from calc. file [206]
Edge running load Fy: 376.1/124.8 = 3.01 N./mm

Edge total load Fxy: 2320.1 N. Shear load from calc. file [206]
Edge running load Fxy: 2320.1/124.8 = 18.6 N./mm

Edge running load Diagonal Tension: = 6.01 N/mm

Edge resultant running load SQRT($3.01^2 + 18.6^2$) + 6.01 = 24.8 N./mm

Fastener details for the skin/cap from Figure 2-76
Fastener type: CR3224 C'sk head, bind fastener
Dia: 3.2mm
Number of fasteners along edge: 6
Fastener shear allow: 2565. N.
Bearing allow. in skins: 1765. N. 2024-T3, t= 1.7 mm
Bearing allow. in spar: 750. N. 2024-T42, t= 0.8 mm
Allowable flux = 6*750./124.8 = 36.0 N/mm

RF = Allowable flux/Applied flux
= 36.0/24.8 **RF = 1.45**

2.5.10 Aileron Box Lower Skin

This section documents the analysis of the aileron box lower skin. It provides summaries of analysis input data (geometry, materials etc.), load extraction, analysis and RF's. Where PESS analysis modules have not been used, analyses for critical cases are illustrated by worked examples.
The following strength and buckling checks are made:

- Strength under biaxial and shear loading (FEMAP post processing)
- Panel buckling (PESS)
- Permanent buckling at Limit Load (PESS)
- Post-buckling (PSM 5.3.5.6)
- Skin to front spar joints
- Skin to rear spar joints
- Skin to rib joints (see rib section 2.5.11.8)

The analysis is predominantly based on PESS. PESS skin entities are defined in Appendix K,Table 6-26.

The skins are an exception to the aileron global buckling policy:

Skin buckling > Limit Load permitted. (section 2.5.2)

The skin is bounded by the front and rear spars and is divided into panels by ribs. For weight saving purposes panel thickness varies; to accommodate countersunk fasteners increased thickness lands are used at joints. The skin is shown in Figure 2-69 and the division into panels/PESS groups in Table 2-83.

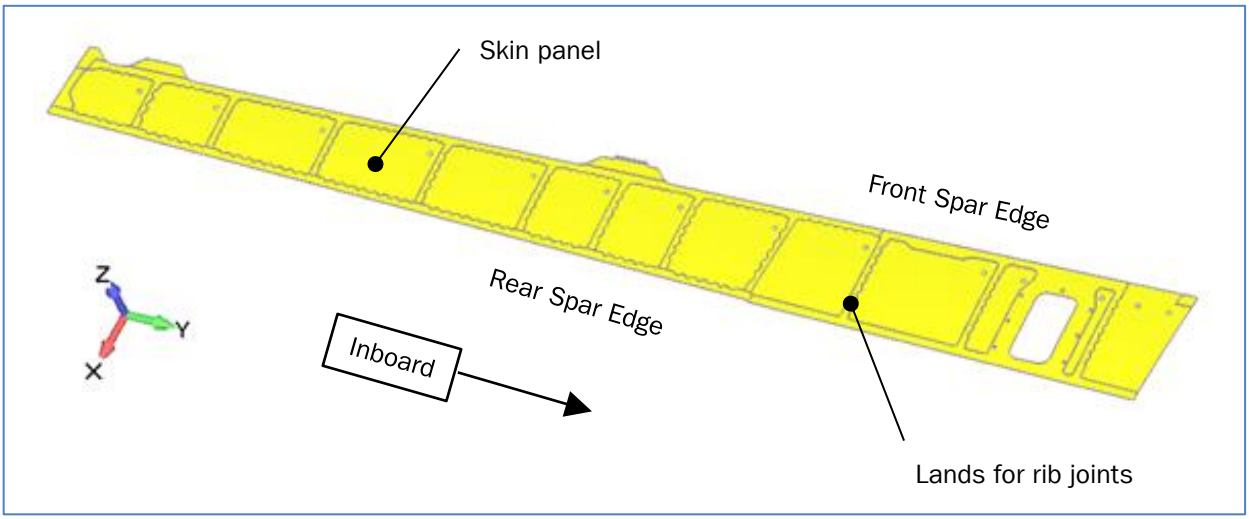

Figure 2-69 Aileron box lower skin (Part-5576024307/A)

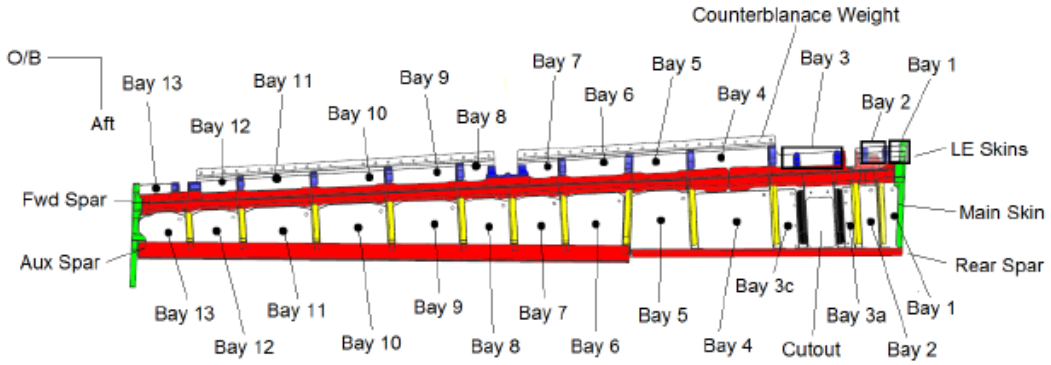

Each bay/panel has an associated FEMAP/PESS group. The group contains elements which represent the panel in DFEMs 2 to 7
The group names follow PESS rules. For example:

Bay 1 group name = *Uskin_box_PANEL_22010*
Bay 9 group name = *Uskin_box_PANEL_22090*
Bay 12 group name = *Uskin_box_PANEL_22120*

Figure 2-70 Aileron box lower skin bays and PESS groups

2.5.10.1 Calculation File, Geometry and Materials

The table below and Figure 2-69 & Figure 2-70 provide an overview of data for the analysis.

Part	Part No.	Calculation Files		Material
		Id	Geometry	
Lower Skin	5576024307/08	2	Table 6-13	2024 T3 sheet, B basis
		7	Table 2-104	

Table 2-100 Lower skin, overview of calculation files, geometry and materials

2.5.10.2 Load Case Applicability

Load cases applicable to the skins are given in Table 2-101. These are a subset of those described in section 2.3 and Table 2-12.

Load Case Applicability Table for Aileron Box						
Angle [°]	-25	-22	0	3	10	15
DFEM	10	20	30	40	50	60
Applicable Load Case Id's.	Aerodynamic + Wing Bending					
		2001	3002 3003	4004	5005	
	Flight Control System					
	None					
	Inertia					
			3053 3054			

Table 2-101 Load case applicability table for aileron box lower skin.

2.5.10.3 Load Extraction for Lower Skin.

Load extractions for both the upper and lower skins are similar. It is predominantly based on PESS with additional data from FEMAP data tables.
Load cases applicable to the upper skin are given in Table 2-101.
PESS load extraction details applicable to the main lower skins are:

PESS Panel data conversion = Element average (LRM020) used in panel analysis[34]
PESS Panel data conversion = FBD + SC (LRM010) used in joint analysis
DFEM results are ultimate, the safety factor for all load cases = 1.5
∴ PESS LL-Factor = 0.667 & UL-Factor = 1.00

Panel extracted load components and orientation are shown in Figure 2-71.

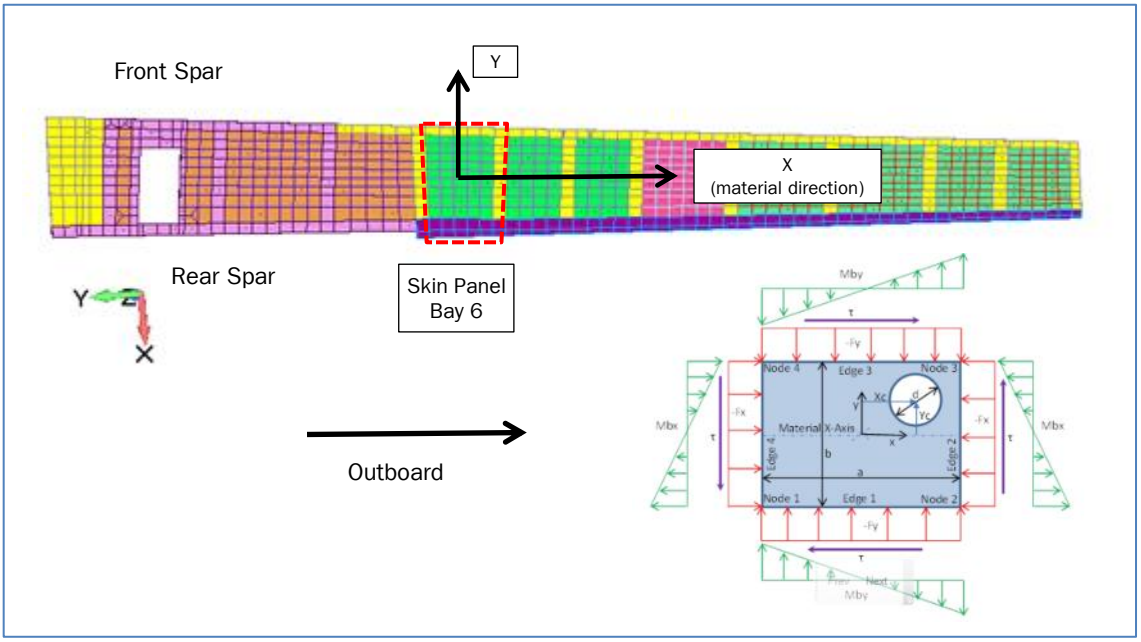

Figure 2-71 Lower main skin panel forces, key and orientation.

[34] Panels have curvature; therefore element average load extraction must be used.

2.5.10.4 Panel Strength under Biaxial Loading

Stress data is extracted/condensed from FEM [3] to [6] results via FEMAP data tables.
The summary method selected identifies elements with the max/min centre stress values for each of the load cases given in Table 2-101.
The "raw data tables" are then written to calculation file [2], worksheet: *FEMAP Skin*. From the "raw data" sheet the following RF summary tables are constructed.

- Tension strength: Maximum principal stress vs Ftu allowable.
- Compression strength: Minimum principal stress vs Fcy allowable.

If the critical stress occurs at a fastener row, net area effects have to be accounted for. A simple conservative approach will be employed using a minimum RF policy.
Assume the skin critical tension stress occurs at a row of fasteners with a 4D pitch.
Assume major principle stress is at right angles to the fastener row
Hence

$$f_{net} = f_{gross}*4/3 \quad = f_{FEM}*4/3$$

In addition to the above compression strength check, panel buckling checks are performed in the section 2.5.10.5 (follows this section).

Tension Strength

Panel ID	Maximum Principal Stress						
	Element Top Surface		Element Bot Surface		Allowable		RF
	Element Id.	Value MPa	Element Id.	Value MPa	Criteria	Value MPa	
2001	2711688	45.9	2711688	34.6			9.59
3002	2711634	140.5	2711634	157.6			2.79
3003	2711688	69.2	2711688	52.3			6.37
3054	2711634	2.9	2711664	3.6	Ftu	441.0	122.09
3055	2711899	31.5	2711920	29.8			13.99
4004	2711634	140.6	2711634	157.8			2.79
5005	2711679	122.1	2711634	135.2			3.26

Table 2-102 Lower skin, summary of tension (major principal) stress.

Critical tension load case	3002		
Critical ult. applied stress	Major principal	157.6 MPa	
Allowable stress	Ftu	441.0 MPa	2024-T3, B basis

RF = Ftu allow/Major applied 441./157.6 = 2.79 **RF = >2.00**

Net area minimum RF policy RF>1.33 Pass

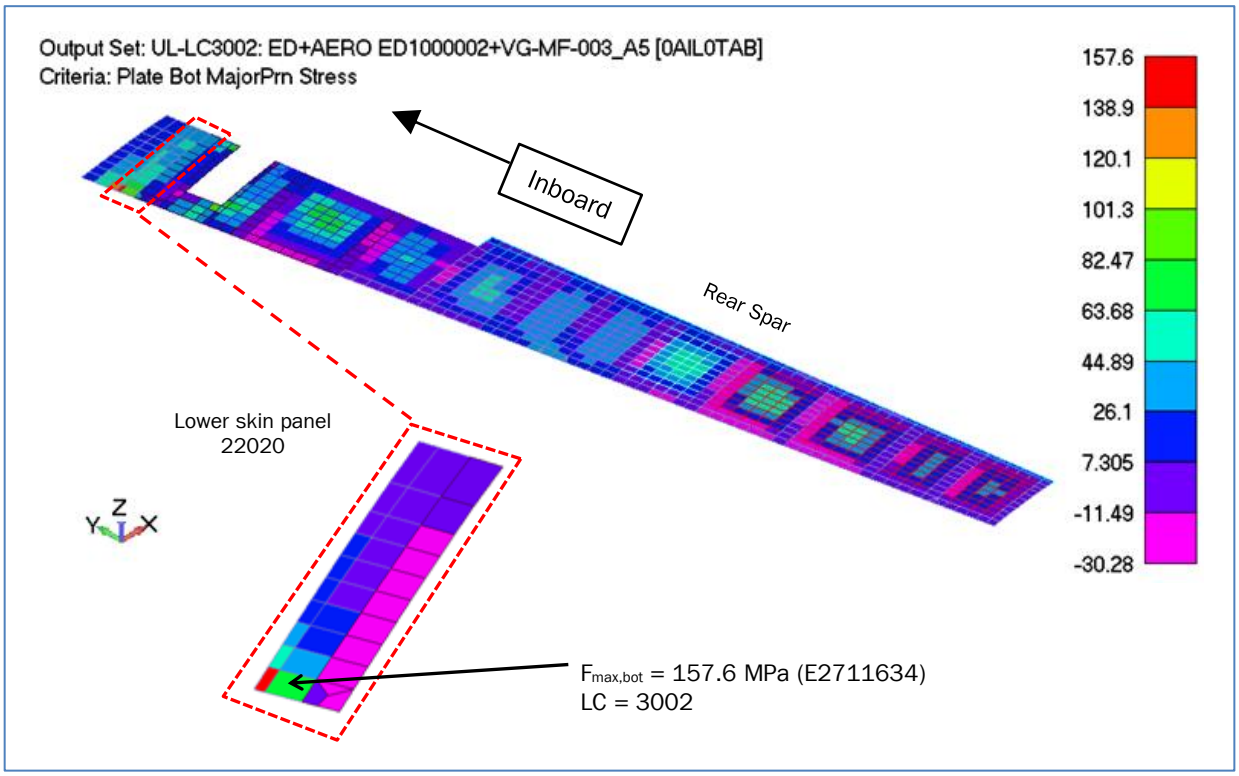

Figure 2-72 Lower skin, location of critical applied tension stress.

Compression Strength

Load ID	Maximum Principal Stress						
	Element Top Surface		Element Bot Surface		Allowable		RF
	Element Id.	Value MPa	Element Id.	Value MPa	Criteria	Value MPa	
2001	2711634	-73.2	2711634	-83.4			3.30
3002	2711688	-108.1	2711688	-81.9			2.55
3003	2711634	-102.3	2711634	-118.8			2.32
3054	2711681	-6.7	2711681	-5.7	Fcy	276.0	41.47
3055	2711679	-41.9	2711679	-27.7			6.59
4004	2711688	-108.8	2711688	-82.3			2.53
5005	2711688	-105.7	2711688	-79.4			2.61

Table 2-103 Lower skin, summary of compression (min principal) strength.

Critical compression load case	3003		
Critical Bay	2		
Critical ult. applied stress	Minor principal	-118.8 MPa	
Allowable stress	Fcy	276.0 MPa	2024-T3, B basis
RF = Fcy allow/Minor applied	276./118.8 = 2.32		**RF = >2.00**

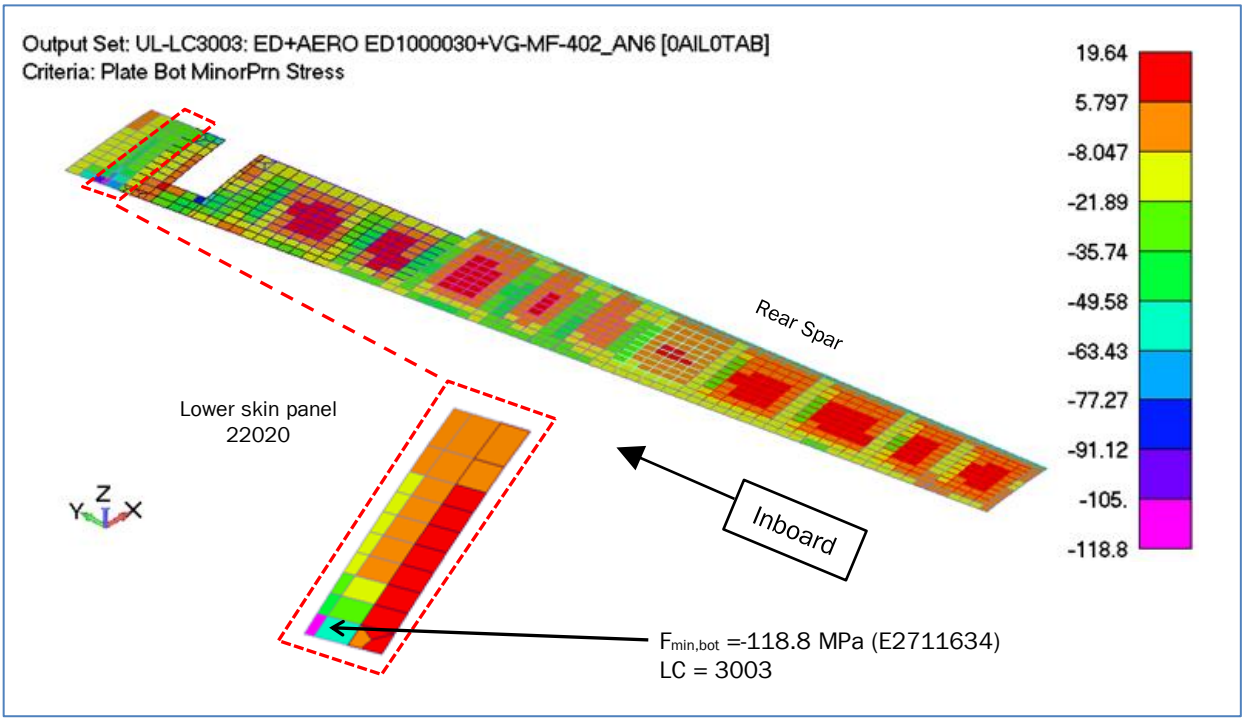

Figure 2-73 Lower skin, location of critical applied compression stress.

2.5.10.5 Panel Buckling Analysis

Panel buckling analysis is performed using PESS *Analysis Panel* module.

- All edges are considered as simple supports

A buckling RF summary for all skin panels can be found in Table 2-108.
The RF's presented do not include post buckling effects (where required).
All panel buckling RF's are > 1.5; therefore a post buckling analysis is not required.
The analysis exclusively uses PESS automated analysis. Only summary tables of input data, panel allowable and critical panel RF/load case are presented.

Summary of PESS Panel Geometry
Panel geometry is derived from DFEM skin panel groups and the PESS FE Data module. A summary from the PESS panel report is given in Table 2-87; no benefit from increased land thickness has been taken. Additional geometry used in the analysis (fastener types, land thickness) can be found in Appendix E, Table 6-13, under the heading *Lower Skin, box zone.*

Bay	PANEL ID	Panel Name	Type	Mat	Edge Constraint	Basic geometry			
						a	b	t	r
	[-]	[-]	[-]	[-]	[-]	[mm]	[mm]	[mm]	[mm]
1	22010	Lskin_box_PANEL	Curved	1	SSSS	63.66	190.06	1.20	2113.47
2	22020	Lskin_box_PANEL	Curved	1	SSSS	61.35	186.94	1.20	2085.00
3	22031	Lskin_box_PANEL	Curved	1	SSSS	40.75	184.93	1.10	2032.95
3	22032	Lskin_box_PANEL	Flat	1	SSSS	74.82	49.04	1.55	-
3	22033	Lskin_box_PANEL	Curved	1	SSSS	83.71	179.50	1.10	2067.15
4	22040	Lskin_box_PANEL	Curved	1	SSSS	199.41	173.91	1.10	2008.23
5	22050	.Lskin_box_PANEL	Curved	1	SSSS	143.25	167.68	1.10	1984.05
6	22060	.Lskin_box_PANEL	Curved	1	SSSS	169.57	193.39	1.00	1683.90
7	22070	.Lskin_box_PANEL	Curved	1	SSSS	124.74	185.19	1.00	1639.20
8	22080	.Lskin_box_PANEL	Curved	1	SSSS	124.74	178.74	1.00	1598.43
9	22090	.Lskin_box_PANEL	Curved	1	SSSS	174.64	171.00	0.90	1550.87
10	22100	.Lskin_box_PANEL	Curved	1	SSSS	183.15	161.75	0.80	1495.64
11	22110	.Lskin_box_PANEL	Curved	1	SSSS	179.62	152.38	0.80	1444.50
12	22120	.Lskin_box_PANEL	Curved	1	SSSS	129.73	144.38	0.80	1404.49
13	22130	.Lskin_box_PANEL	Curved	1	SSSS	132.43	137.81	0.80	1378.40

Table 2-104 Lower skin panel geometry (summary from PESS).

Summary of PESS Panel Buckling Allowables

The detail buckling check requested/performed PESS are shown in Table 2-105. All buckling RF's are relative limit load.

Method	FC	Definition	Code	LL	UL
PSM	Buckling	Shear	0001	☑	☐
PSM	Buckling	Comp	0002	☑	☐
PSM	Buckling	Bending	0003	☑	☐
PSM	Buckling	Shear + Comp	0004	☑	☐
PSM	Buckling	Shear + Bending	0005	☑	☐
PSM	Buckling	Comp + Bending	0006	☑	☐
PSM	Buckling	Shear + Comp + Bending	0007	☑	☐
PSM	Strength	Hole Stress	0101	☐	☐
PSM	Strength	Permanent Buckling	0108	☑	☐

Table 2-105 PESS panel buckling requests for lower skin panels.

Bay	PANEL ID	Panel Name	Type	Mat	Edge Constraint	Basic geometry			
						a	b	t	r
	[-]	[-]	[-]	[-]	[-]	[mm]	[mm]	[mm]	[mm]
1	22010	Lskin_box_PANEL	Curved	1	SSSS	63.66	190.06	1.20	2113.47
2	22020	Lskin_box_PANEL	Curved	1	SSSS	61.35	186.94	1.20	2085.00
3	22031	Lskin_box_PANEL	Curved	1	SSSS	40.75	184.93	1.10	2032.95
3	22032	Lskin_box_PANEL	Flat	1	SSSS	74.82	49.04	1.55	-
3	22033	Lskin_box_PANEL	Curved	1	SSSS	83.71	179.50	1.10	2067.15
4	22040	Lskin_box_PANEL	Curved	1	SSSS	199.41	173.91	1.10	2008.23
5	22050	.Lskin_box_PANEL	Curved	1	SSSS	143.25	167.68	1.10	1984.05
6	22060	.Lskin_box_PANEL	Curved	1	SSSS	169.57	193.39	1.00	1683.90
7	22070	.Lskin_box_PANEL	Curved	1	SSSS	124.74	185.19	1.00	1639.20
8	22080	.Lskin_box_PANEL	Curved	1	SSSS	124.74	178.74	1.00	1598.43
9	22090	.Lskin_box_PANEL	Curved	1	SSSS	174.64	171.00	0.90	1550.87
10	22100	.Lskin_box_PANEL	Curved	1	SSSS	183.15	161.75	0.80	1495.64
11	22110	.Lskin_box_PANEL	Curved	1	SSSS	179.62	152.38	0.80	1444.50
12	22120	.Lskin_box_PANEL	Curved	1	SSSS	129.73	144.38	0.80	1404.49
13	22130	.Lskin_box_PANEL	Curved	1	SSSS	132.43	137.81	0.80	1378.40

Table 2-106 Lower skin panel buckling parameters (summary from PESS).

Buckling RF Summary, All Panels/Load Cases

The buckling criteria for the LE lower skin is no buckling < limit load. This is indicated by a RF >1.0. For RF's > 1.5 no post buckling analysis is required.

Bay	PANEL ID [-]	LC ID [-]	Analysis type [-]	Load level [-]	RF [-]	Failure Mode	Buckling Criteria	Post Buckle Required
1	22010	3002	Shear + Comp	100% LL	25.05	LL Buckling	PASS	No
2	22020	3002	Shear + Comp	100% LL	4.60	LL Buckling	PASS	No
2	22020	4004	Shear + Comp	100% LL	4.60	LL Buckling	PASS	No
3	22031	4004	Shear + Comp	100% LL	6.42	LL Buckling	PASS	No
3	22032	5005	Shear + Comp	100% LL	6.01	LL Buckling	PASS	No
3	22033	4004	Permanent Buckli	100% LL	5.20	Strength	PASS	No
4	22040	3002	Shear + Comp	100% LL	2.02	LL Buckling	PASS	No
5	22050	3002	Shear + Comp	100% LL	2.64	LL Buckling	PASS	No
6	22060	3002	Shear + Comp	100% LL	3.27	LL Buckling	PASS	No
7	22070	3003	Shear + Comp	100% LL	3.31	LL Buckling	PASS	No
8	22080	3003	Shear + Comp	100% LL	3.11	LL Buckling	PASS	No
9	22090	3003	Shear + Comp	100% LL	3.44	LL Buckling	PASS	No
10	22100	3002	Shear + Comp	100% LL	1.70	LL Buckling	PASS	No
11	22110	3002	Shear + Comp	100% LL	1.71	LL Buckling	PASS	No
12	22120	3002	Shear + Comp	100% LL	3.25	LL Buckling	PASS	No
13	22130	2001	Shear + Comp	100% LL	24.84	LL Buckling	PASS	No

Table 2-107 PESS buckling analysis RF summary all lower skin panels

Critical elastic buckling case: 3002
Critical Bay/Pane Idl: Bay 10 – Panel Id 12100
Critical elastic buckling RF (relative to Limit) **RF = 1.70**

No panel buckles below ultimate load, no diagonal tension analysis required.

Expanded details for critical Bay 10 - panel Id 22100

Panel 22100 Loading

PANEL ID [-]	LC ID [-]	Fx [N/mm]	Fy [N/mm]	Fxy [N/mm]	Mx [Nmm/mm]	My [Nmm/mm]	LL factor [-]	UL factor [-]
22100	2001	1.42	-0.86	3.41	-	-	0.67	1.00
22100	3002	-8.31	0.55	-6.55	-	-	0.67	1.00
22100	3003	0.07	-0.71	4.11	-	-	0.67	1.00
22100	3053	0.53	-0.01	-0.14	-	-	0.67	1.00
22100	3054	0.11	-0.02	-0.26	-	-	0.67	1.00
22100	4004	-6.70	0.79	-6.68	-	-	0.67	1.00

Table 2-108 PESS loading for lower skin panel 12100 (summary from PESS).

Panel 22100 Buckling Results for Critical 3002

PANEL ID [-]	LC ID [-]	Analysis type [-]	Load level [-]	RF [-]
22100	3002	Shear	100% LL	4.11
22100	3002	Comp	100% LL	2.06
22100	3002	Bending	100% LL	NA
22100	3002	Shear + Comp	100% LL	1.70
22100	3002	Shear + Bending	100% LL	NA
22100	3002	Comp + Bending	100% LL	NA
22100	3002	Shear + Comp + Bending	100% LL	NA
22100	3002	Permanent Buckling	100% LL	8.15

Table 2-109 PESS RF for lower main skin panel/bay 10, critical LC 3002 (summary from PESS)

Critical buckling is shear + compression interaction.

2.5.10.6 Post Buckling of Lower Skin Panels

No analysis required; all panels buckle above ultimate loads. See Table 2-107.

2.5.10.7 Joint with Front spar

The lower main skin is attached to the front spar lower aft flange cap via a single row of blind fasteners. Skin lands at the front spar are shown in Figure 2-74. Joint geometry details and allowables are given in the Table 2-111.

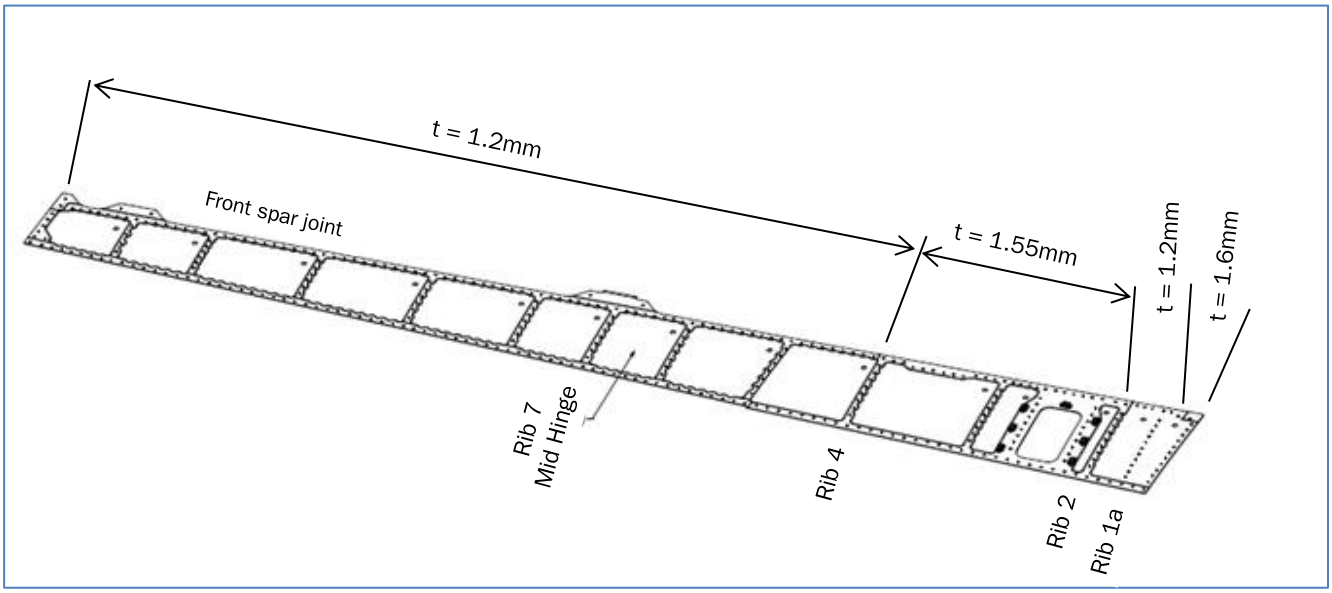

Figure 2-74 Lower main skin, details of land thickness at the front spar joint

Fastener and thickness data at the joint with the front spar is given in the Table 2-110

Joint to Front Spar Summary of Allowables

Bay	PANEL ID	Fastener Details				Shear Allow	Skin Bearing Allowable			Spar Bearing Allowable			Allowable Flux		
	[-]	Type	Dash No.	Dia	No	/Fastener	t_{land}	Mat_{skin}	/Fastener	tspar	Mat_{spar}	/Fastener	Shear	Bearing	Mode
				mm		N.	mm		N.	mm		N.	N/mm	N/mm	
1	22010	NAS1919M	4	3.2	3	2880	1.20	2024-T3	2166	1.70	2124-T851	2735	135.71	128.88	Bearing
2	22020	NAS1919M	4	3.2	3	2880	1.20	2024-T3	2166	1.70	2124-T851	2735	238.72	226.70	Bearing
3	22031	CR3224	4	3.2	2	2950	1.55	2024-T3	1628	1.70	2124-T851	1765	144.77	86.62	Bearing
3	22032	CR3224	4	3.2	5	2950	1.55	2024-T3	1628	1.70	2124-T851	1765	197.14	117.95	Bearing
3	22033	CR3224	4	3.2	4	2950	1.55	2024-T3	1628	1.70	2124-T851	1765	140.96	84.34	Bearing
4	22040	CR3224	4	3.2	11	2950	1.55	2024-T3	1628	1.20	2124-T851	1260	162.73	69.50	Bearing
5	22050	CR3224	4	3.2	8	2950	1.20	2024-T3	1260	1.10	2124-T851	1148	164.74	64.08	Bearing
6	22060	CR3224	4	3.2	9	2950	1.20	2024-T3	1260	1.00	2124-T851	1035	156.58	54.93	Bearing
7	22070	CR3224	4	3.2	7	2950	1.20	2024-T3	1260	1.20	2124-T851	1260	165.54	70.71	Bearing
8	22080	CR3224	4	3.2	7	2950	1.20	2024-T3	1260	1.20	2124-T851	1260	165.54	70.70	Bearing
9	22090	CR3224	4	3.2	10	2950	1.20	2024-T3	1260	1.00	2124-T851	1035	168.92	59.27	Bearing
10	22100	CR3224	4	3.2	10	2950	1.20	2024-T3	1260	1.00	2124-T851	1035	161.07	56.51	Bearing
11	22110	CR3224	4	3.2	10	2950	1.20	2024-T3	1260	1.00	2124-T851	1035	164.24	57.62	Bearing
12	22220	CR3224	4	3.2	7	2950	1.20	2024-T3	1260	1.00	2124-T851	1035	159.18	55.85	Bearing
13	22130	CR3224	4	3.2	7	2950	1.20	2024-T3	1260	1.00	2124-T851	1035	155.94	54.71	Bearing

Table 2-111 Lower main skin, details of fasteners, land thickness and allowables at the front spar joint.

Loading for the joint is extracted from the FEM' [3] to [6] via the PESS FE data module. Panel loads are exported from PESS as an Excel file[35]. Panel loads from this (intermediate) loading file are then imported to calculation file [2] and processed. Key points in this process are:

- PESS FE Data extraction with recovery method: FBD + SC[36]
- The edge loads are averages along each side.

[35] Calc files [201] to [208]
[36] EI average gives panel centre data NOT edge data.

Summary of RF's for the Lower Box Skin to Front Spar Joint

									Lower Skin - Front Spar Joint			
	PANEL ID	Lower Skin to F. Spar Ultimate Reserve Factor vs Load Case Id							PANEL ID	Critcal RF's		
Bay	[-]	2001	3002	3003	3053	3054	4004	5005	[-]	LC	Mode	RF
1	22010	3.52	1.75	2.33	103.62	115.28	1.73	2.01	22010	4004	Bearing	1.73
2	22020	3.05	1.77	2.32	47.37	44.60	1.76	2.07	22020	4004	Bearing	1.76
3	22031	3.14	1.50	2.36	35.68	36.35	1.64	1.99	22031	3002	Bearing	1.50
3	22032	3.06	1.64	2.05	58.62	49.23	1.50	1.47	22031	5005	Bearing	1.47
3	22033	13.13	4.50	8.23	45.08	46.93	4.48	4.34	22033	5005	Bearing	4.34
4	22040	11.94	5.04	7.29	116.46	138.37	4.83	4.55	22040	5005	Bearing	4.55
5	22050	9.40	3.53	6.38	132.84	127.44	3.51	3.45	22050	5005	Bearing	3.45
6	22060	7.53	2.49	4.64	84.68	113.72	2.53	2.44	22060	5005	Bearing	2.44
7	22070	8.00	2.61	4.56	128.12	70.27	2.66	2.50	22070	5005	Bearing	2.50
8	22080	16.66	15.64	17.26	96.86	66.44	13.34	14.15	22080	4004	Bearing	13.34
9	22090	21.23	32.39	28.45	341.01	188.04	23.70	24.59	22090	2001	Bearing	21.23
10	22100	18.48	12.06	20.08	936.65	305.05	11.61	11.14	22100	5005	Bearing	11.14
11	22110	18.93	9.41	27.25	738.94	188.91	9.54	9.92	22110	3002	Bearing	9.41
12	22120	12.66	4.79	20.44	350.33	228.18	5.20	5.26	22120	3002	Bearing	4.79
13	22130	35.34	16.59	79.35	1787.28	480.90	22.18	19.33	22130	3002	Bearing	16.59

Table 2-112 Upper main skin joint to front spar, RF summary

Critical load case: 5005
Critical Bay/Panel id. Bay 3, Panel id. 22032
Critical RF: Joint is bearing critical **RF = 1.47**

Expanded details for critical, LC 5005, Bay 1/Panel Id 22032

	Load Case: 5005		PESS Edge 3 Loading									
	Ultimate Loads		Running Load (PESS)				Running Load (DT)	Running Load Total				
	PANEL ID	Span	Fy	Fxy	Mby	$Fx_{(Mby)}$	Resultant	Fx	Fxy	Fres	RF	Mode
Bay	[-]	a	N/mm		N mm/mm	N/mm	N/mm	N/mm				
1	22010	63.7	48.0	15.9	-	0.00	0	48.0	15.9	50.6	2.01	Bearing
2	22020	36.2	65.2	-56.6	-	0.00	0	65.2	-56.6	86.3	2.07	Bearing
3	22031	40.8	-34.6	-20.3	-	0.00	0	-34.6	-20.3	40.1	1.99	Bearing
3	22032	74.8	1.3	-73.7	-	0.00	0	1.3	-73.7	73.7	1.47	Bearing
3	22033	83.7	-11.6	-13.6	-	0.00	0	-11.6	-13.6	17.9	4.34	Bearing
4	22040	199.4	-4.4	-14.6	-	0.00	0	-4.4	-14.6	15.3	4.55	Bearing
5	22050	143.3	-0.4	-18.5	-	0.00	0	-0.4	-18.5	18.5	3.45	Bearing
6	22060	169.6	4.0	-22.2	-	0.00	0	4.0	-22.2	22.5	2.44	Bearing
7	22070	124.7	12.0	-25.5	-	0.00	0	12.0	-25.5	28.2	2.5	Bearing
8	22080	124.7	-2.6	-4.3	-	0.00	0	-2.6	-4.3	5.0	14.15	Bearing
9	22090	174.6	0.4	-2.4	-	0.00	0	0.4	-2.4	2.4	24.59	Bearing
10	22100	183.2	0.2	-5.1	-	0.00	0	0.2	-5.1	5.1	11.14	Bearing
11	22110	179.6	2.3	-5.3	-	0.00	0	2.3	-5.3	5.8	9.92	Bearing
12	22120	129.7	0.5	-10.6	-	0.00	0	0.5	-10.6	10.6	5.26	Bearing
13	22130	132.4	-2.8	0.3	-	0.00	0	-2.8	0.3	2.8	19.33	Bearing

Table 2-113 Lower main skin joint to front spar, RF's for critical load case 5005

Worked Example for Bay 3 - Panel 22032

Critical load case:	5005	
Skin panel to spar joint is:	PESS edge 1	see Figure 2-71
Length of edge 1:	74.8 mm	
Edge total load Fy:	95.2 N	End load from calc. file [206]
Edge running load Fy:	95.2/74.8	= 1.27 N./mm
Edge total load Fxy:	5514 N	Shear load from calc. file [206]
Edge running load Fxy:	5514/74.8	= 73.7 N./mm
Edge running load Diagonal Tension:		= 0.0 N/mm
Edge resultant running load	SQRT($1.27^2 + 73.7^2$)	= 73.7 N./mm

Fastener details for the skin/cap from Table 2-111

Fastener:	CR3224-4	C'sk head, blind fastener
Dia:	3.2mm	
Number of fasteners along edge:	5	
Fastener shear allow:	2565. N.	
Bearing allow. in skin:	1628. N.	2024-T3, t= 1.55 mm
Bearing allow. in spar:	1765. N.	2124-T851, t= 1.70 mm
Allowable flux:	= 5*1628/74.8	= 108.8 N/mm

RF = Allowable flux/Applied flux

= 108.8/73.7 **RF = 1.47**

2.5.10.8 Joint with Rear Spar

The lower main skin is attached to the rear spar lower flange cap via a single row of blind fasteners. Skin lands at the front spar are shown in Figure 2-75. Joint geometry details and allowables are given in the Figure 2-93.

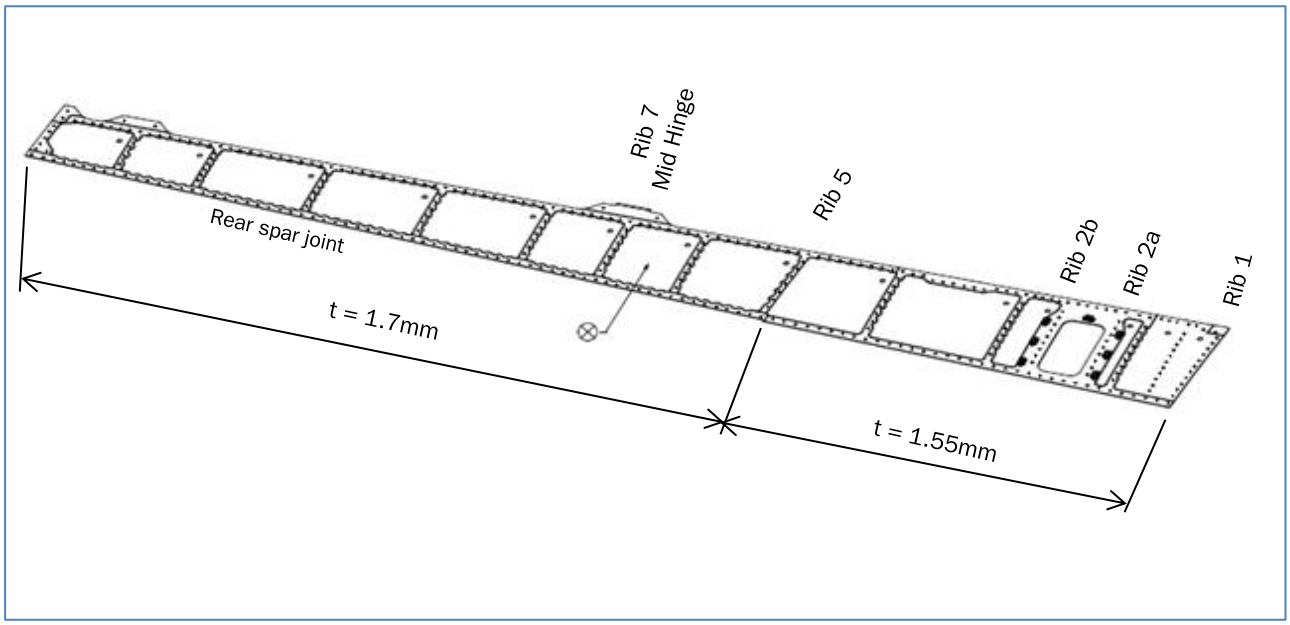

Figure 2-75 Lower main skin, details of land thickness at the rear spar joint

Fastener, thickness and allowable data at the joint with the rear spar is given in the Table 2-114

Joint to Rear Spar Summary of Allowables

	PANEL ID	Fastener Details				Shear Allow	Skin Bearing Allowable			Spar Bearing Allowable			Allowable Flux		
Bay	[-]	Type	Dash No.	Dia	No	/Fastener	t_{land}	Mat_{skin}	/Fastener	tspar	Mat_{spar}	/Fastener	Shear	Bearing	Mode
				mm		N.	mm		N.	mm		N.	N/mm	N/mm	
1	22010	CR3224	4	3.2	2	2565	1.50	2024-T3	1575	1.00	2024-T42	1130	80.59	35.50	Bearing
2	22020	CR3224	4	3.2	3	2565	1.50	2024-T3	1575	1.00	2024-T42	1130	212.62	93.66	Bearing
3	22031	CR3224	4	3.2	3	2565	1.50	2024-T3	1575	1.00	2024-T42	1130	188.83	83.18	Bearing
3	22033	CR3224	4	3.2	4	2565	1.50	2024-T3	1575	1.00	2024-T42	1130	122.57	53.99	Bearing
4	22040	CR3224	4	3.2	9	2565	1.50	2024-T3	1575	1.00	2024-T42	1130	115.77	51.00	Bearing
5	22050	CR3224	4	3.2	8	2565	1.50	2024-T3	1575	1.00	2024-T42	1130	143.25	63.10	Bearing
6	22060	CR3224	4	3.2	7	2565	1.70	2024-T3	1765	0.80	2024-T42	990	105.90	40.87	Bearing
7	22070	CR3224	4	3.2	6	2565	1.70	2024-T3	1765	0.80	2024-T42	990	123.39	47.62	Bearing
8	22080	CR3224	4	3.2	6	2565	1.70	2024-T3	1765	0.80	2024-T42	990	123.38	47.62	Bearing
9	22090	CR3224	4	3.2	9	2565	1.70	2024-T3	1765	0.80	2024-T42	990	132.20	51.02	Bearing
10	22100	CR3224	4	3.2	9	2565	1.70	2024-T3	1765	0.80	2024-T42	990	126.05	48.65	Bearing
11	22110	CR3224	4	3.2	9	2565	1.70	2024-T3	1765	0.80	2024-T42	990	128.53	49.60	Bearing
12	22220	CR3224	4	3.2	6	2565	1.70	2024-T3	1765	0.80	2024-T42	990	118.64	45.79	Bearing
13	22130	CR3224	4	3.2	7	2565	1.70	2024-T3	1765	0.80	2024-T42	990	135.60	52.33	Bearing

Table 2-115 Lower main skin, details of fasteners, land thickness and allowables at the rear spar joint.

Loading for the joint is extracted from the FEM [3] to [6] via the PESS FE data module. Panel loads are exported from PESS as an Excel file[37]. Panel loads from this (intermediate) loading file are then imported to calculation file [2] and processed. Key points in this process are:

- PESS FE Data extraction with recovery method: FBD + SC[38]
- The edge loads are averages along each side.

[37] Calc files [201] to [208]
[38] EI average gives panel centre data NOT edge data.

Summary of RF's for Lower Box Skin to Rear Spar Joint

									Lower Skin - Rear Spar Joint			
	PANEL ID	Reserve Factor vs Load Case Id							PANEL ID	Critcal RF's		
Bay	[-]	2001	3002	3003	3053	3054	4004	5005	[-]	LC	Mode	RF
1	22010	4.82	2.10	3.15	80.01	76.53	2.11	2.30	22010	3002	Bearing	2.10
2	22020	3.04	1.45	2.08	59.72	53.60	1.44	1.59	22020	4004	Bearing	1.44
3	22031	4.77	2.11	3.21	115.80	102.48	2.15	2.27	22031	3002	Bearing	2.11
3	22033	6.48	2.19	4.17	156.55	212.82	2.25	2.42	22033	3002	Bearing	2.19
4	22040	5.16	2.07	3.94	52.06	54.20	2.11	2.24	22040	3002	Bearing	2.07
5	22050	7.47	4.29	6.13	120.93	109.97	3.99	4.20	22050	4004	Bearing	3.99
6	22060	5.93	4.56	6.17	114.51	95.65	3.94	3.92	22060	5005	Bearing	3.92
7	22070	7.20	4.63	7.40	272.99	373.52	4.24	4.29	22070	4004	Bearing	4.24
8	22080	6.69	2.88	4.61	435.01	418.10	2.88	2.53	22080	5005	Bearing	2.53
9	22090	8.88	3.37	6.08	204.48	172.80	3.47	3.05	22090	5005	Bearing	3.05
10	22100	11.76	5.14	9.60	446.21	496.09	5.20	4.32	22100	5005	Bearing	4.32
11	22110	18.44	12.98	17.47	476.08	318.18	11.73	9.37	22110	5005	Bearing	9.37
12	22120	20.13	19.26	21.15	899.44	442.84	16.66	13.95	22120	5005	Bearing	13.95
13	22130	35.33	44.16	50.07	3745.01	3351.28	350.07	80.44	22130	2001	Bearing	35.33

Table 2-116 Lower skin joint to rear spar, RF summary

Critical load case:	4004	
Critical Bay/Panel id.	Bay 2, Panel id. 22020	
Critical RF:	Joint is bearing critical	**RF = 1.44**

Expanded details for critical, LC 4004, Bay 2/Panel Id 22020

Ultimate Load Case:		4004	PESS Edge 1 Loading								RF	Mode
			Running Load (PESS)				Running Load (DT)	Running Load Total				
Bay	PANEL ID [-]	Span a	Fy	Fxy	Mby	$Fx_{(Mby)}$	Resultant	Fx	Fxy	Fres		
			N/mm		N mm/mm	N/mm	N/mm	N/mm				
1	22010	63.7	-6.1	15.7	-	0.000	0	-6.1	15.7	16.796	2.11	Bearing
2	22020	36.2	-6.0	64.6	-	0.000	0	-6.0	64.6	64.862	1.44	Bearing
3	22031	40.8	-1.1	38.7	-	0.000	0	-1.1	38.7	38.687	2.15	Bearing
3	22033	83.7	-5.8	27.3	-	0.000	0	-5.8	27.3	27.963	2.25	Bearing
4	22040	199.4	-0.5	24.2	-	0.000	0	-0.5	24.2	24.155	2.11	Bearing
5	22050	143.3	-1.5	15.7	-	0.000	0	-1.5	15.7	15.814	3.99	Bearing
6	22060	169.6	-2.3	10.1	-	0.000	0	-2.3	10.1	10.359	3.94	Bearing
7	22070	124.7	-0.7	11.2	-	0.000	0	-0.7	11.2	11.222	4.24	Bearing
8	22080	124.7	-2.9	16.3	-	0.000	0	-2.9	16.3	16.524	2.88	Bearing
9	22090	174.6	-0.7	14.7	-	0.000	0	-0.7	14.7	14.691	3.47	Bearing
10	22100	183.2	-0.5	9.3	-	0.000	0	-0.5	9.3	9.342	5.20	Bearing
11	22110	179.6	-0.2	4.2	-	0.000	0	-0.2	4.2	4.226	11.73	Bearing
12	22120	129.7	-0.8	2.6	-	0.000	0	-0.8	2.6	2.748	16.66	Bearing
13	22130	132.4	-0.1	0.0	-	0.000	0	-0.1	0.0	0.149	350.07	Bearing

Table 2-117 Lower main skin joint to rear spar, RF's for critical load case 4004

Worked Example for Bay 2 - Panel 22020

Critical load case:	4004	
Skin panel to spar joint is:	PESS edge 1	see Figure 2-71
Length of edge 1:	36.2 mm	
Edge total load Fy:	-218.6 N.	End load from calc. file [206]
Edge running load Fy:	218.6/36.2	= 6.0 N./mm
Edge total load Fxy:	2337.4 N.	Shear load from calc. file [206]
Edge running load Fxy:	2337.4/36.2	= 64.6 N./mm
Edge running load Diagonal Tension:		= 0.0 N/mm
Edge resultant running load	SQRT($6.0^2 + 64.6^2$)	= 64.9 N./mm

Fastener details for the skin/cap from Table 2-111

Fastener:	CR3224	C'sk head, blind fastener
Dia.	= 3.2mm	
Number of fasteners along edge	= 3	
Fastener shear allow.	= 2565. N.	
Bearing allow. in skins	= 1575. N.	2024-T3, t= 1.5 mm
Bearing allow. in spar	= 1130. N.	2024-T42, t= 1.0 mm
Allowable flux	= 3*1130/36.2	= 93.7 N/mm

RF = Allowable flux/Applied flux

= 93.7/64.9 **RF = 1.44**

2.5.11 Aileron Box Ribs

The principal purpose of the aileron box ribs is to support and divide the upper and lower skins. Aileron box rib geometry and properties are dependent on their purpose. Three rib types are employed:

- End ribs
  Two ribs manufactured as machining's from 2124 T851 aluminium plate.
  The purpose of these ribs is to close the aileron (torque) box.
- Internal full height ribs
  Twelve ribs manufactured using a press formed process from 2024 T42 aluminium.
  The purpose of these ribs is to stabilize the aileron box by dividing it into panels with adequate buckling properties.
- Internal half height ribs
  Two ribs manufactured using a press formed process from 2024 T42 aluminium.
  The purpose of these ribs is to stabilize a cut-out in the lower skin.

Examples of the three rib types are shown in Figure 2-76; individual Id's and their associated PESS group Id are shown in Figure 2-77.

Analysis of the aileron box rib consists of the following strength and buckling checks:

- Web Strength under biaxial loading (FEMAP post processing)
- Stress around (un-flanged) web lightening holes. (PESS)
- Web buckling. (PESS)
- Flange loads due post-buckling of upper and lower skins (PSM 5.3)
- Local buckling and crippling of upper and lower flanges. (PESS)
- Inter-rivet buckling of rib to skin joints. (PESS)
- Strength of attachments to upper/lower skins and front/rear spars (PESS loading)

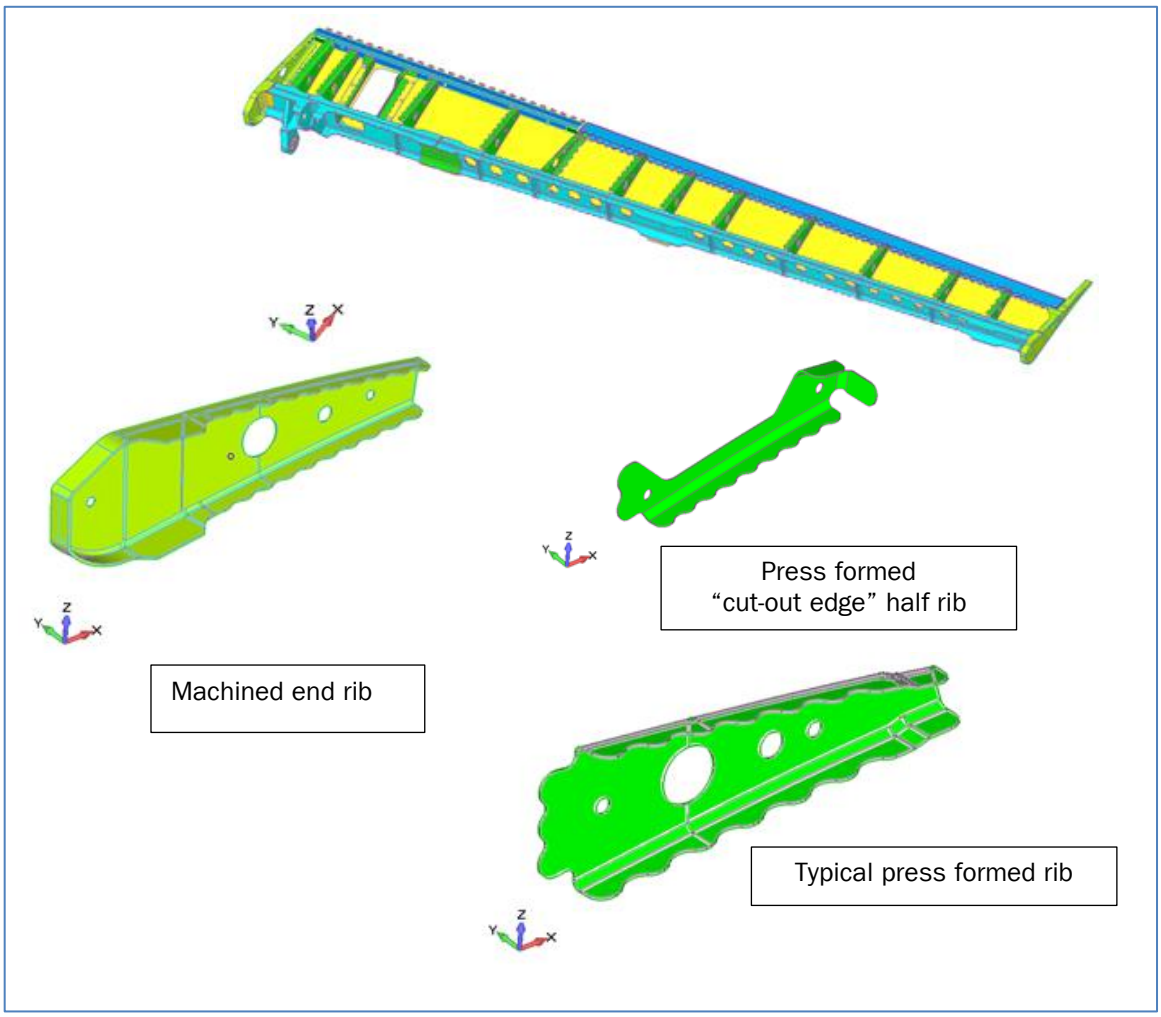

Figure 2-76 Typical aileron box ribs

2.5.11.1 Calculation File, Geometry and Materials

The table below provides an overview of analysis data

Part	Part	Calculation Files		Material
		Id	Geometry	
Rib1	557.60.24.321/22	[2] [7]	Table 6-14 Table 2-104	2124 T851 plate, B basis
Rib 1a	557.60.24.385/86			2024 T42 sheet, S Basis
Rib 2	557.60.24.325/26			
Rib 2a	557.60.24.351/52			
Rib 2b	557.60.24.353/54			
Rib 3	557.60.24.327/28			
Rib 4	557.60.24.329/30			
Rib 5	557.60.24.469/32			
Rib 6	557.60.24.333/34			
Rib 7	557.60.24.335/36			
Rib 8	557.60.24.337/38			
Rib 9	557.60.24.339/40			
Rib 10	557.60.24.341/42			
Rib 11	557.60.24.343/44			
Rib 12	557.60.24.345/46			
Rib 13	557.60.24.349/50			2124 T851 plate, B basis

Table 2-118 Aileron box ribs, overview of calculation files, geometry and materials

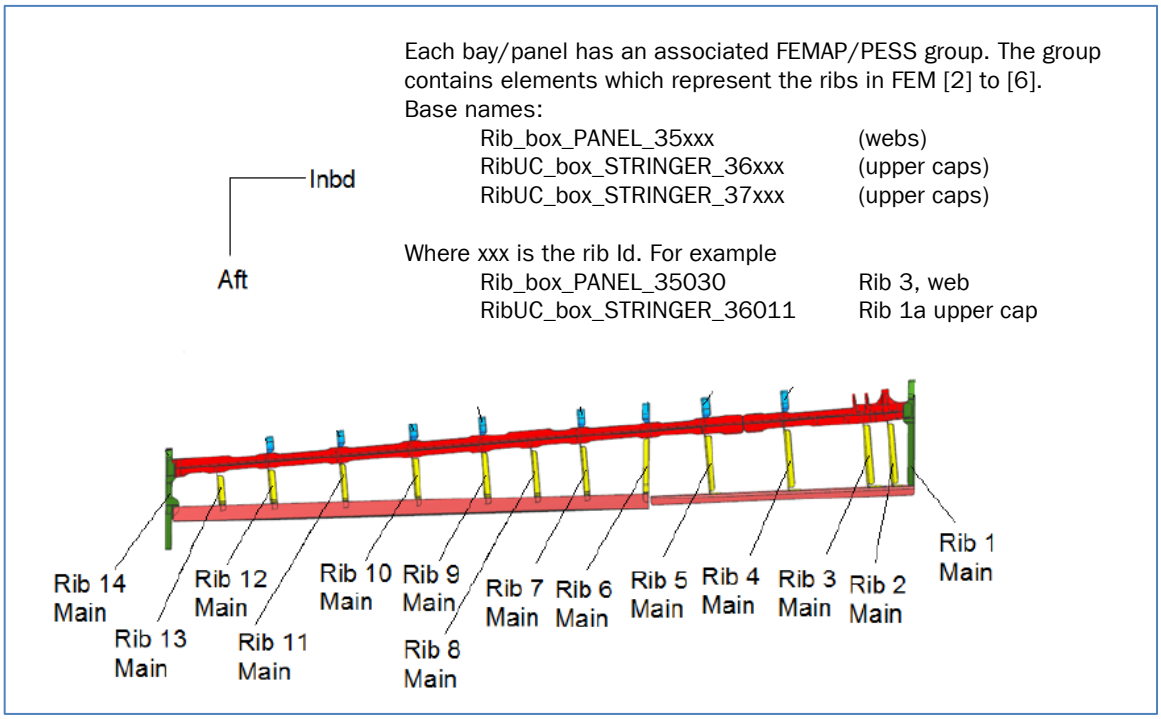

Figure 2-77 Aileron box ribs and PESS groups

Rib geometry and properties are defined by two methods, dependent on the analysis method used.

PESS analysis:	PESS FE Data module used extract dimensions etc. from DFEM's 20 to 50 See Table 2-124 to Table 2-131 (tables on following pages)
Excel/PSM analysis	Calculation file [2], worksheet: *Geometry.* Data is taken from the relevant part drawing or assembly. See Table 6-14 in Appendix [E]

Typically "small details" (fastener types, land thickness etc.) and ancillary information (plate thickness etc.) are defined in the Excel calculation file [2]
Some cross over and duplication of data occurs. For example PESS panel analysis requires lightening hole diameters to be manually defined. These are taken from the calculation file definition. The Excel/PSM analysis requires panel sizes; these are taken from PESS.

2.5.11.2 Load Case Applicability

Load cases applicable to the ribs are given in Table 2-119.These are a subset of those described in section 2.3 and Table 2-12.

Load Case Applicability Table for Aileron Box						
Angle [°]	-25	-22	0	3	10	15
DFEM	10	20	30	40	50	60
Applicable Load Case Id's.	Aerodynamic + Wing Bending					
		2001	3002 3003	4004	5005	
	Flight Control System					
	None					
	Inertia					
			3053 3054			

Table 2-119 Load case applicability table for aileron box ribs.

2.5.11.3 Load Extraction

Loading for the ribs is determined by extracting shell forces for webs and beam force for upper and lower flanges.
Load extraction from DFEM's [2] to [5] is implemented via the PESS FE Data module.
Details of the PESS load extraction processes are given in section 2.5.5. Details applicable to the ribs are:

PESS data conversion = Element average (LRM020)

The relationship between panel and PESS load extraction orientation is shown in Figure 2-78.

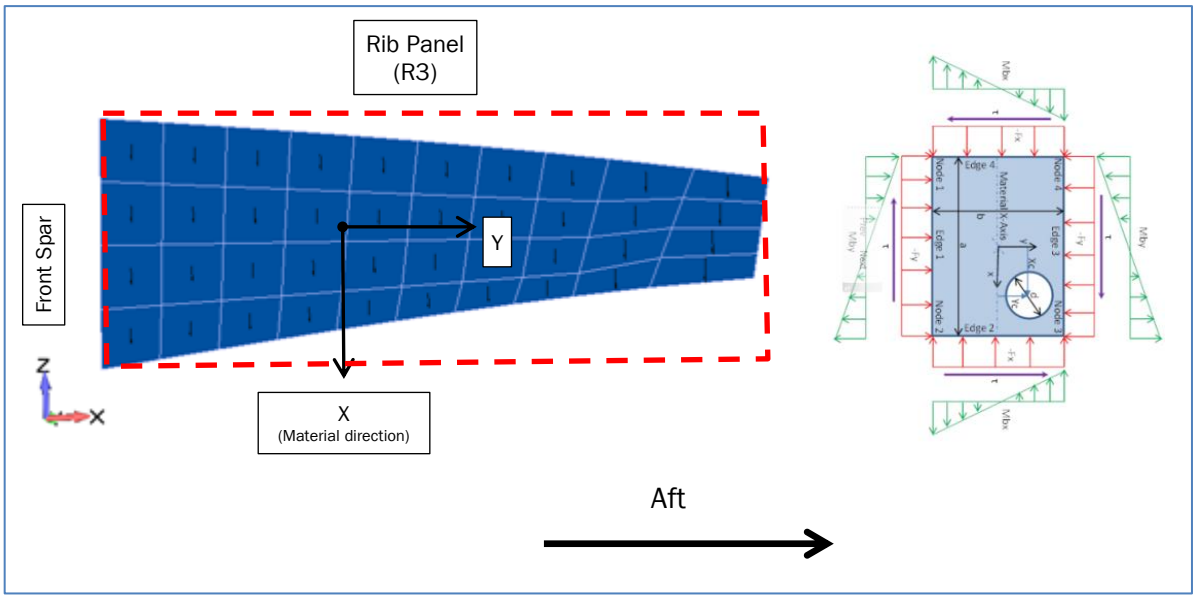

Figure 2-78 Rib panel forces key and orientation.

2.5.11.4 Rib Web Strength under Biaxial Loading

Stress data is extracted/condensed from FEM's [3] to [6] results via FEMAP data tables.
The FEMAP output summary method used identifies elements with the max/min centre stress values for each of the load cases given in Table 2-119.
The "raw data tables" are then written to calculation file [2], worksheet: *FEMAP Ribs*
From the "raw data" sheet the following RF summary tables are constructed.
RF criteria:

- Tension strength: Maximum principal stress vs Ftu allowable.
- Compression strength: Minimum principal stress vs Fcy allowable.

In addition to the above, web buckling and stress around lightening hole checks are performed in the section 2.5.11.5 (follows this section).

<u>Inboard M/C Rib 1</u>
Max/min stress from panel Id's: 35010

	Maximum Principal Stress							Minimum Principal Stress						
Load Case	Element Top Surface		Element Bot Surface		Allowable		RF	Element Top Surface		Element Bot Surface		Allowable		RF
	Element Id.	Value MPa	Element Id.	Value MPa	Criteria	Value MPa		Element Id.	Value MPa	Element Id.	Value MPa	Criteria	Value MPa	
2001	2714137	4.5	2714155	7.3			63.18	2714159	-14.5	2714159	-9.5			28.14
3002	2714165	33.6	2714155	30.3			13.75	2714150	-11.7	2714137	-30.3			13.42
3003	2714244	9.4	2714153	22.6			20.43	2714153	-24.4	2714159	-19.0			16.69
3054	2714146	4.5	2714138	5.0	Ftu	462.0	93.06	2714240	-3.3	2714151	-1.5	Fcy	407.0	123.70
3055	2714172	2.1	2714155	1.3			218.77	2714155	-2.4	2714172	-1.8			171.42
4004	2714159	24.5	2714159	28.2			16.40	2714244	-10.0	2714137	-21.4			19.01
5005	2714137	24.1	2714159	25.2			18.36	2714150	-9.1	2714137	-21.4			19.01

Table 2-120 Aileron box inboard end rib, web biaxial strength.

Critical tension load case	3002		
Critical ult. applied stress	Major principal	33.6 MPa	
Allowable stress	Ftu	462.0 MPa	2124-T851, B basis
RF = allow/applied	462./33.6 = 13.75		**RF = >2.00**

Critical compression load case	3002		
Critical ult. applied stress	Minor principal	-30.3 MPa	
Allowable stress	Fcy	407.0 MPa	2124-T851, B basis
RF = allow/applied	407./30.3 = 13.43		**RF = >2.00**

Outboard M/C Rib 13

Max/min stress from panel Id's: 35130

	Maximum Principal Stress							Minimum Principal Stress						
Load Case	Element Top Surface		Element Bot Surface		Allowable		RF	Element Top Surface		Element Bot Surface		Allowable		RF
	Element Id.	Value MPa	Element Id.	Value MPa	Criteria	Value MPa		Element Id.	Value MPa	Element Id.	Value MPa	Criteria	Value MPa	
2001	2714222	5.3	2714207	8.0			57.93	2714207	-8.1	2714223	-4.6			50.46
3002	2714207	23.9	2714206	23.2			19.35	2714206	-22.2	2714207	-24.3			16.76
3003	2714225	14.6	2714231	5.8			31.70	2714231	-4.6	2714206	-14.5			27.99
3054	2714226	0.2	2714228	0.2	Ftu	462.0	1934.02	2714177	-0.2	2714128	-0.2	Fcy	407.0	2281.39
3055	2714207	5.8	2714224	5.0			79.85	2714224	-4.8	2714207	-5.9			69.40
4004	2714210	20.6	2714206	17.9			22.45	2714206	-17.3	2714203	-20.8			19.52
5005	2714207	17.0	2714206	32.1			14.37	2714206	-30.5	2714191	-16.8			13.34

Table 2-121 Aileron box outboard end rib, web biaxial strength.

Critical tension load case	5005		
Critical ult. applied stress	Major principal	32.1 MPa	
Allowable stress	Ftu	462.0 MPa	2124-T851, B basis
RF = allow/applied	462./32.1 = 14.39		**RF = >2.00**

Critical compression load case	5005		
Critical ult. applied stress	Minor principal	-30.5 MPa	
Allowable stress	Fcy	407.0 MPa	2124-T851, B basis
RF = allow/applied	407./30.5 = 13.3		**RF = >2.00**

Full Height Formed Ribs

Ribs 1a, 2 & 3 to 12
Max/min stress from panel Id's: 35020, 35030, 35040, 35050, 35060, 35070, 35080, 35090, 35100, 35110, 35120.

	Maximum Principal Stress							Minimum Principal Stress						
Load Case	Element Top Surface		Element Bot Surface		Allowable		RF	Element Top Surface		Element Bot Surface		Allowable		RF
	Element Id.	Value MPa	Element Id.	Value MPa	Criteria	Value MPa		Element Id.	Value MPa	Element Id.	Value MPa	Criteria	Value MPa	
2001	2713818	33.7	2713818	37.7			11.31	2713806	-64.5	2713806	-66.9			4.22
3002	2713806	123.1	2713806	135.5			3.15	2713818	-61.4	2713818	-66.5			4.25
3003	2713818	47.0	2713818	51.1			8.35	2713806	-91.4	2713806	-100.9			2.80
3054	2713310	12.1	2713301	3.4	Ftu	427.0	35.32	2713301	-3.6	2713310	-12.6	Fcy	283.0	22.49
3055	2713342	13.2	2713342	14.0			30.59	2713518	-16.1	2713518	-17.0			16.68
4004	2713806	124.2	2713806	136.6			3.12	2713818	-62.0	2713818	-67.4			4.20
5005	2713806	108.5	2713806	117.2			3.64	2713818	-52.0	2713818	-56.8			4.98

Table 2-122 Aileron box full height formed ribs, web biaxial strength.

Critical tension load case	4004		
Critical Rib	Rib 1a		
Critical ult. applied stress	Major principal	136.6 MPa	
Allowable stress	Ftu	427.0 MPa	2024-T42, S basis
RF = allow/applied	427./136.6 = 3.12		**RF = >2.00**

Critical compression load case	3003		
Critical Rib	1a		
Critical ult. applied stress	Minor principal	-100.9 MPa	
Allowable stress	Fcy	283.0 MPa	2024-T42, S basis
RF = allow/applied	283./100.9 = 2.80		**RF = >2.00**

Half Height Formed Ribs
Ribs 2a & 2b
Max/min stress from panel Id's: 35021, 35022

	Maximum Principal Stress							Minimum Principal Stress						
Load Case	Element Top Surface		Element Bot Surface		Allowable		RF	Element Top Surface		Element Bot Surface		Allowable		RF
	Element Id.	Value MPa	Element Id.	Value MPa	Criteria	Value MPa		Element Id.	Value MPa	Element Id.	Value MPa	Criteria	Value MPa	
2001	2713245	36.4	2713245	31.3			11.72	2713283	-24.0	2713283	-28.7			11.80
3002	2713283	51.5	2713283	65.5			6.51	2713288	-85.4	2713293	-84.6			3.34
3003	2713245	53.4	2713245	45.7			7.99	2713283	-38.1	2713283	-39.7			7.43
3054	2713267	7.2	2713276	3.3	Ftu	427.0	59.59	2713264	-2.3	2713267	-6.7	Fcy	283.0	122.26
3055	2713245	12.5	2713276	31.8			13.42	2713267	-27.1	2713283	-13.4			21.16
4004	2713283	53.7	2713283	66.3			6.44	2713245	-80.4	2713293	-76.1			3.72
5005	2713283	52.9	2713283	64.8			6.59	2713245	-76.1	2713293	-73.9			3.82

Table 2-123 Aileron box half height formed ribs, web biaxial strength.

Critical tension load case	4004		
Critical ult. applied stress	Major principal	66.3 MPa	
Allowable stress	Ftu	427.0 MPa	2024-T42, S basis
RF = allow/applied	427./66.3 = 6.44		**RF = >2.00**

Critical compression load case	3002		
Critical ult. applied stress	Minor principal	-85.4 MPa	
Allowable stress	Fcy	283.0 MPa	2024-T42, S basis
RF = allow/applied	283./85.4 = 3.31		**RF = >2.00**

2.5.11.5 Web Buckling and Lightening Hole Strength

Summary tables from the PESS panel analysis are presented below.

- All edges are considered as simple supports.
- Buckling criteria: No buckling < Ultimate
- All buckling RF's are relative to ultimate.

The rib webs are of a trapezoid shape with multiple holes. The small web holes are for manufacturing purposes, the larger for weight optimisation. For the purposes of web buckling analysis an equivalent flat rectangular shape is assumed (by PESS) with a single central circular hole, whose dimensions are taken from the largest hole. A typical idealisation is shown in Figure 2-79. All edges are assumed to have simple supports.

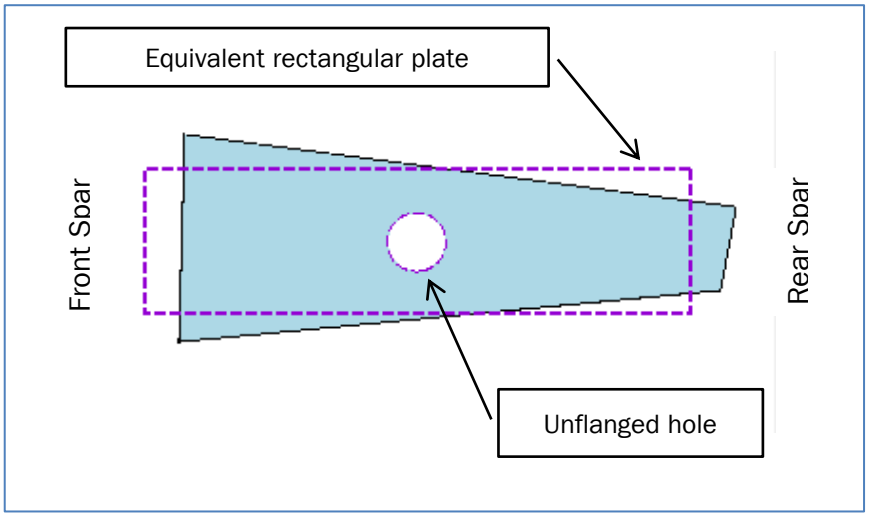

Figure 2-79 Typical web buckling idealisation (Rib 4 shown)

The aileron box essentially acts as a toque box. It is subject to some "beading as a beam" from wing enforced deformations. However from inspection of ref. [13] wing enforced displacements only, interface loads are small. Hence:

- Crushing (Brazier) loads resulting from curvature of the aileron box are assumed to be negligible.

Both the buckling and strength analysis is performed using PESS panel analysis module. As PESS is an approved software tool no detailed worked example will be provided, only summaries.

Summary of PESS Panel Geometry

PANEL ID	Panel Name	Type	Mat	Edge Constraint	Basic geometry a	b	t	r	Hole geometry x	y	D	Type	H	W
[-]	[-]	[-]	[-]	[-]	[mm]	[mm]	[mm]	[mm]	[mm]	[mm]	[mm]	[mm]	[mm]	[mm]
35010	Rib_main_PANEL_35010	Flat-Holes	1	SSSS	51.25	192.73	0.80	-	0.00	0.00	25.00	UnFlanged	-	-
35011	Rib_main_PANEL_35011	Flat-Holes	2	SSSS	50.44	189.75	1.60	-	0.00	0.00	21.00	UnFlanged	-	-
35020	Rib_main_PANEL_35020	Flat-Holes	2	SSSS	49.72	187.27	1.27	-	0.00	0.00	25.00	UnFlanged	-	-
35021	Rib_main_PANEL_35021	Flat	2	SSSF	31.34	186.13	1.27	-	-	-	-	-	-	-
35022	Rib_main_PANEL_35022	Flat	2	SSSF	30.84	183.13	1.27	-	-	-	-	-	-	-
35030	Rib_main_PANEL_35030	Flat-Holes	2	SSSS	47.39	179.31	1.00	-	0.00	0.00	18.00	UnFlanged	-	-
35040	Rib_main_PANEL_35040	Flat-Holes	2	SSSS	45.06	171.35	0.80	-	0.00	0.00	18.00	UnFlanged	-	-
35050	Rib_main_PANEL_3505	Flat-Holes	2	SSSS	40.50	196.42	0.80	-	0.00	0.00	18.00	UnFlanged	-	-
35060	Rib_main_PANEL_3506	Flat-Holes	2	SSSS	38.56	187.16	0.80	-	0.00	0.00	22.00	UnFlanged	-	-
35070	Rib_main_PANEL_3507	Flat-Holes	2	SSSS	37.25	180.74	1.00	-	0.00	0.00	20.00	UnFlanged	-	-
35080	Rib_main_PANEL_3508	Flat-Holes	2	SSSS	35.93	174.31	0.80	-	0.00	0.00	20.00	UnFlanged	-	-
35090	Rib_main_PANEL_3509	Flat-Holes	2	SSSS	34.08	165.31	0.63	-	0.00	0.00	20.00	UnFlanged	-	-
35100	Rib_main_PANEL_3510	Flat-Holes	2	SSSS	32.14	155.87	0.63	-	0.00	0.00	18.00	UnFlanged	-	-
35110	Rib_main_PANEL_3511	Flat-Holes	2	SSSS	30.23	146.61	0.63	-	0.00	0.00	18.00	UnFlanged	-	-
35120	Rib_main_PANEL_3512	Flat-Holes	2	SSSS	28.85	139.92	0.80	-	0.00	0.00	16.00	UnFlanged	-	-
35130	Rib_main_PANEL_35130	Flat-Holes	1	SSSS	28.68	117.04	0.80	-	0.00	0.00	16.00	UnFlanged	-	-

Material List	
1	AA2124 ¦ P ¦ T851 ¦ 38.11-50.80 ¦ B ¦ T=20
2	AA2024 ¦ FSP ¦ T42 ¦ 0.53-6.32 ¦ S ¦ T=20

Table 2-124 Rib web panel geometry (summary from PESS).

Summary of PESS Panel Buckling Allowables

PANEL ID	Standard allowables Ks	Fscr	Kc	Fccr	Kb	Fbcr	Pb	Hole allowables Ksh/Ks	kc	kb
[-]	[-]	[MPa]	[-]	[MPa]	[-]	[MPa]	[MPa]	[-]	[-]	[-]
35010	5.13	44.87	8.62	10.31	40.07	47.92	109.32	44.87	0.06	0.07
35011	5.13	150.80	8.62	41.76	40.07	194.06	148.58	150.80	0.07	0.08
35020	5.13	114.32	8.62	27.01	40.07	125.52	136.72	114.32	0.06	0.07
35021	-	-	-	-	-	-	-	-	-	-
35022	-	-	-	-	-	-	-	-	-	-
35030	5.13	98.42	8.62	18.27	40.07	84.89	124.20	98.42	0.05	0.06
35040	5.12	67.27	8.62	12.80	40.07	59.49	109.38	67.27	0.05	0.06
35050	5.04	75.36	8.62	9.74	40.07	45.28	118.29	75.36	0.03	0.04
35060	5.03	63.72	8.62	10.73	40.07	49.86	122.23	63.72	0.04	0.05
35070	5.04	115.24	8.62	17.98	40.07	83.55	139.04	115.24	0.04	0.05
35080	5.04	75.82	8.62	12.37	40.07	57.49	127.41	75.82	0.04	0.05
35090	5.04	48.63	8.62	8.53	40.07	39.64	112.41	48.63	0.05	0.05
35100	5.04	58.30	8.62	9.59	40.07	44.59	117.64	58.30	0.04	0.05
35110	5.04	60.51	8.62	10.84	40.07	50.39	122.58	60.51	0.05	0.05
35120	5.04	118.15	8.62	19.20	40.07	89.22	140.85	118.15	0.04	0.05
35130	5.09	120.03	8.62	27.44	40.07	127.52	141.50	120.03	0.06	0.07

Table 2-125 Rib web panel buckling allowables (summary from PESS).

Summary of PESS Panel Buckling and Lightening Hole Strength Critical RF's
The buckling criteria for the box ribs is no buckling < ultimate load.
This is indicated by a RF >1.0.

Rib	PANEL ID	Buckling RF			Post Buckle	Strength RF		
	[-]	LC	Type	RF	Required	LC	Type	RF
IB	35010	3002	Shear	26.98	No	3002	Hole Stress	34.88
1a	35011	4004	Shear	24.29	No	4004	Hole Stress	10.36
2	35020	4004	Shear + Comp	12.45	No	4004	Hole Stress	5.61
2a	35021	-	-	-	-	-	Hole Stress N/A	N/A
2b	35022	-	-	-	-	-	Hole Stress N/A	N/A
3	35030	5005	Shear + Comp	27.07	No	5005	Hole Stress	19.62
4	35040	3002	Shear + Comp	14.12	No	3002	Hole Stress	14.71
5	35050	3003	Shear + Comp	59.36	No	3002	Hole Stress	50.06
6	35060	4004	Shear + Comp	11.70	No	4004	Hole Stress	7.49
7	35070	4004	Shear + Comp	26.09	No	4004	Hole Stress	10.25
8	35080	4004	Shear + Comp	17.39	No	4004	Hole Stress	9.95
9	35090	4004	Shear + Comp	8.58	No	4004	Hole Stress	6.95
10	35100	5005	Shear + Comp	9.54	No	5005	Hole Stress	6.94
11	35110	5005	Shear + Comp	10.45	No	5005	Hole Stress	6.40
12	35120	4004	Shear + Comp	40.42	No	4004	Hole Stress	15.00
OB	35130	2001	Shear	89.62	No	2001	Hole Stress	33.94

Table 2-126 Rib web panel critical RF's.

Web buckling

Critical load case: 4004
Critical web panel: Rib 9 PESS panel 35090
Critical RF = 8.58 **RF = >2.00**
(no buckling below ultimate)

Lightening Hole Strength

Critical load case: 4004
Critical web panel: Rib 2 PESS panel 35020
Critical RF = 5.61 **RF = >2.00**

2.5.11.6 Strength & Stability of Upper and Lower Flanges

The flanges are analysed for local buckling and crippling ignoring any benefit of the skin land (conservative). The principal purpose of this is to demonstrate that the rib flange can support compression loads when the skin is in a post buckled state. A separate forced crippling check is performed in the skin panel diagonal tension analysis.

Summary of Upper Flange PESS Stiffener Geometry

Rib	Flange (STRINGER) ID	STRINGER Name [-]	Type [-]	Mat [-]	Cross-section properties Area [mm2]	Iyy [mm4]	Izz [mm4]	Skin Mat [-]	t [mm]	Fastener Type [-]	Pitch [mm]	Diameter [mm]
IB	36010	_box_STRINGER_36010	Flange	1	13.60	1.13	209.62	2	1.20	a	25.40	3.20
1a	36011	_box_STRINGER_36011	Flange	1	26.08	5.56	577.43	2	1.20	a	25.40	3.20
2	36020	_box_STRINGER_36020	Flange	1	19.63	2.76	372.99	2	1.20	a	25.40	3.20
3	36030	_box_STRINGER_36030	Flange	1	14.50	1.21	254.05	2	1.20	a	25.40	3.20
4	36040	_box_STRINGER_36040	Flange	1	10.72	0.57	160.41	2	1.20	a	25.40	3.20
5	36050	_box_STRINGER_36050	Flange	1	10.72	0.57	160.41	2	1.20	a	25.40	3.20
6	36060	_box_STRINGER_36060	Flange	1	10.80	0.58	164.03	2	1.20	a	25.40	3.20
7	36070	_box_STRINGER_36070	Flange	1	14.00	1.17	228.67	2	1.20	a	25.40	3.20
8	36080	_box_STRINGER_36080	Flange	1	11.20	0.60	182.93	2	1.20	a	25.40	3.20
9	36090	_box_STRINGER_36090	Flange	1	7.68	0.23	104.86	2	1.20	a	25.40	3.20
10	36100	_box_STRINGER_36100	Flange	1	7.68	0.23	104.86	2	1.20	a	25.40	3.20
11	36110	_box_STRINGER_36110	Flange	1	7.86	0.24	112.40	2	1.20	a	25.40	3.20
12	36120	_box_STRINGER_36120	Flange	1	10.48	0.56	149.87	2	1.20	a	25.40	3.20
OB	36131	_box_STRINGER_36131	Flange	1	13.60	1.13	209.62	2	1.20	a	25.40	3.20
OB	36132	_box_STRINGER_36132	Flange	1	13.60	1.13	209.62	2	1.20	a	25.40	3.20

Material List	
1	AA2024 ¦ FSP ¦ T42 ¦ 0.53-6.32 ¦ S ¦ T=20
2	AA2024 ¦ S ¦ T3 ¦ 0.52-3.27 ¦ B ¦ T=20
Fastener List	
a	Blind countersunk head rivet

Table 2-127 Rib upper flange geometry (summary from PESS).

Summary of Upper Flange PESS Stiffener Buckling & Crippling Allowables

Rib	Flange (STRINGER) ID	Local buckling stress BE1 [MPa]	BE2 [MPa]	BE3 [MPa]	BE4 [MPa]	BE5 [MPa]	BE6 [MPa]	BE7 [MPa]	Fcc [MPa]	IRB E1 [MPa]	E2 [MPa]
IB	36010	314.12	276.14	-	-	-	-	-	169.89	162.24	-
1a	36011	341.60	283.22	-	-	-	-	-	203.00	162.24	-
2	36020	339.03	278.92	-	-	-	-	-	198.92	162.24	-
3	36030	314.12	268.09	-	-	-	-	-	159.35	162.24	-
4	36040	291.26	265.92	-	-	-	-	-	138.09	162.24	-
5	36050	291.26	265.92	-	-	-	-	-	138.09	162.24	-
6	36060	291.26	264.93	-	-	-	-	-	137.32	162.24	-
7	36070	314.12	272.57	-	-	-	-	-	165.04	162.24	-
8	36080	291.26	259.91	-	-	-	-	-	133.62	162.24	-
9	36090	255.38	257.66	-	-	-	-	-	115.18	162.24	-
10	36100	255.38	257.66	-	-	-	-	-	115.18	162.24	-
11	36110	255.38	254.24	-	-	-	-	-	113.19	162.24	-
12	36120	291.26	268.89	-	-	-	-	-	141.10	162.24	-
OB	36131	314.12	276.14	-	-	-	-	-	169.89	162.24	-
OB	36132	314.12	276.14	-	-	-	-	-	169.89	162.24	-

Table 2-128 Rib upper cap instability allowables (summary from PESS).

Buckling codes:	BE1 to BE7:	Flange local buckling
	Fcc:	Flange crippling
	IRB:	Inter-rivet buckling of attached skin

Summary of Upper Flange Applied Crippling Stress

Rib	Flange (STRINGER) ID	Rib Upper Flange Crippling Stress vs Load Case [MPa]						
		2001	3002	3003	3053	3054	4004	5005
IB	36010	12.9	0.0	18.6	0.1	0.1	0.0	0.0
1a	36011	38.7	11.9	57.5	0.6	0.7	11.8	9.9
2	36020	5.8	11.2	9.9	0.6	0.6	10.9	10.1
3	36030	2.0	81.7	3.3	0.2	0.3	80.6	77.2
4	36040	28.4	18.5	42.6	0.1	0.1	18.6	18.2
5	36050	2.5	32.5	6.2	0.4	0.8	31.3	31.2
6	36060	0.0	10.5	4.9	0.8	0.9	8.6	7.9
7	36070	5.2	10.1	14.0	0.4	0.7	6.6	6.3
8	36080	0.3	13.1	9.8	1.0	1.3	13.0	13.0
9	36090	0.5	14.5	7.4	0.0	0.0	14.4	15.3
10	36100	0.1	16.6	5.6	0.8	1.0	15.5	16.7
11	36110	0.0	22.6	8.4	0.5	0.6	18.7	17.9
12	36120	0.0	18.8	10.4	0.2	0.2	15.5	13.8
OB	36131	2.3	9.5	9.2	0.4	0.6	7.4	7.1
OB	36132	0.0	10.0	4.3	0.0	0.3	8.0	7.7

Table 2-129 Rib upper flange applied crippling stress (summary from PESS).

Summary of Upper Flange PESS Buckling & Strength Critical RF's

Rib	Flange (STRINGER)	Ultimate Buckling RF			Post Buckle Required	Ultimate Strength RF		
		LC	Type	RF		LC	Type	RF
IB	36010	3002	F_IRB_AF_Mid	18.85	No	3003	STRENGTH_Mid	67.66
1a	36011	3002	F_IRB_AF_Mid	4.47	No	3003	STRENGTH_Mid	15.25
2	36020	3002	F_IRB_AF_Mid	7.15	No	3003	STRENGTH_Mid	20.47
3	36030	3055	F_CRIP_Mid	17.16	No	5005	STRENGTH_Mid	26.41
4	36040	3002	STRENGTH_Mid	17.97	No	3003	STRENGTH_Mid	31.45
5	36050	3002	F_CRIP_Mid	8.60	No	3003	STRENGTH_Mid	22.09
6	36060	3002	F_CRIP_Mid	21.43	No	3003	STRENGTH_Mid	41.48
7	36070	3002	F_IRB_AF_Mid	35.77	No	5005	STRENGTH_Mid	47.49
8	36080	3002	F_CRIP_Mid	37.90	No	5005	STRENGTH_Mid	60.08
9	36090	5005	F_CRIP_Mid	21.01	No	3003	STRENGTH_Mid	46.03
10	36100	5005	F_CRIP_Mid	17.02	No	3003	STRENGTH_Mid	59.18
11	36110	3002	F_CRIP_Mid	14.19	No	3003	STRENGTH_Mid	99.42
12	36120	3051	F_CRIP_Mid	80.18	No	3002	STRENGTH_Mid	78.86
OB	36131	5005	F_IRB_AF_Mid	95.65	No	3002	STRENGTH_Mid	127.72
OB	36132	3002	F_IRB_AF_Mid	15.29	No	2001	STRENGTH_Mid	30.68

Table 2-130 Rib upper flanges critical RF's.

Upper Cap Instability

Critical load case: 3002

Critical "Stringer": 36011 Upper cap rib 1a

Critical RF = 4.47 **RF = >2.00**

No buckling below ultimate

Upper Cap Strength

Critical load case: 3003

Critical "Stringer: 36011 Upper cap rib 1a

Critical RF = 15.25 **RF = >2.00**

Summary of Lower Flange PESS Stiffener Geometry

STRINGER ID [-]	STRINGER Name [-]	Type [-]	Mat [-]	Cross-section properties Area [mm2]	Iyy [mm4]	Izz [mm4]	Skin Mat [-]	t [mm]	Fastener Type [-]	Pitch [mm]	Diameter [mm]
37010	RibLC_box_STRINGER_37010	Flange	1	14.96	1.51	230.58	2	1.20	a	25.40	3.20
37011	RibLC_box_STRINGER_37011	Flange	1	26.08	5.56	577.43	2	1.20	a	25.40	3.20
37020	RibLC_box_STRINGER_37020	Flange	1	19.63	2.76	372.99	2	1.20	a	25.40	3.20
37021	RibLC_box_STRINGER_37021	Flange	1	19.30	2.59	371.67	2	1.20	a	25.40	3.20
37022	RibLC_box_STRINGER_37022	Flange	1	19.30	2.59	371.67	2	1.20	a	25.40	3.20
37030	RibLC_box_STRINGER_37030	Flange	1	10.72	0.57	160.41	2	1.20	a	25.40	3.20
37040	RibLC_box_STRINGER_37040	Flange	1	15.00	1.25	281.25	2	1.20	a	25.40	3.20
37050	RibLC_box_STRINGER_37050	Flange	1	10.72	0.57	160.41	2	1.20	a	25.40	3.20
37060	RibLC_box_STRINGER_37060	Flange	1	10.72	0.57	160.41	2	1.20	a	25.40	3.20
37070	RibLC_box_STRINGER_37070	Flange	1	14.00	1.17	228.67	2	1.20	a	25.40	3.20
37080	RibLC_box_STRINGER_37080	Flange	1	10.72	0.57	160.41	2	1.20	a	25.40	3.20
37090	RibLC_box_STRINGER_37090	Flange	1	7.68	0.23	104.86	2	1.20	a	25.40	3.20
37100	RibLC_box_STRINGER_37100	Flange	1	7.68	0.23	104.86	2	1.20	a	25.40	3.20
37110	RibLC_box_STRINGER_37110	Flange	1	7.86	0.24	112.40	2	1.20	a	25.40	3.20
37120	RibLC_box_STRINGER_37120	Flange	1	10.48	0.56	149.87	2	1.20	a	25.40	3.20
37131	RibLC_box_STRINGER_37131	Flange	1	13.60	1.13	209.62	2	1.20	a	25.40	3.20
37132	RibLC_box_STRINGER_37132	Flange	1	13.60	1.13	209.62	2	1.20	a	25.40	3.20
Material List											
1	AA2024 ¦ FSP ¦ T42 ¦ 0.53-6.32 ¦ S ¦ T=20										
2	AA2024 ¦ S ¦ T3 ¦ 0.52-3.27 ¦ B ¦ T=20										
Fastener List											
a	Blind countersunk head rivet										

Table 2-131 Rib lower flange geometry (summary from PESS).

Summary of Lower Flange PESS Stiffener Buckling & Crippling Allowables

Rib	Flange (STRINGER) ID	Local buckling stress BE1 [MPa]	BE2 [MPa]	BE3 [MPa]	BE4 [MPa]	BE5 [MPa]	BE6 [MPa]	BE7 [MPa]	Fcc [MPa]	IRB E1 [MPa]	E2 [MPa]
IB	37010	323.32	281.42	-	-	-	-	-	186.88	162.24	-
1a	37011	341.60	283.22	-	-	-	-	-	203.00	162.24	-
2	37020	339.03	278.92	-	-	-	-	-	198.92	162.24	-
2a	37021	336.86	276.69	-	-	-	-	-	193.05	162.24	-
2b	37022	336.86	276.69	-	-	-	-	-	193.05	162.24	-
3	37030	291.26	265.92	-	-	-	-	-	138.09	162.24	-
4	37040	314.12	263.57	-	-	-	-	-	154.04	162.24	-
5	37050	291.26	265.92	-	-	-	-	-	138.09	162.24	-
6	37060	291.26	265.92	-	-	-	-	-	138.09	162.24	-
7	37070	314.12	272.57	-	-	-	-	-	165.04	162.24	-
8	37080	291.26	265.92	-	-	-	-	-	138.09	162.24	-
9	37090	255.38	257.66	-	-	-	-	-	115.18	162.24	-
10	37100	255.38	257.66	-	-	-	-	-	115.18	162.24	-
11	37110	255.38	254.24	-	-	-	-	-	113.19	162.24	-
12	37120	291.26	268.89	-	-	-	-	-	141.10	162.24	-
OB	37131	314.12	276.14	-	-	-	-	-	169.89	162.24	-
OB	37132	314.12	276.14	-	-	-	-	-	169.89	162.24	-

Table 2-132 Rib lower cap instability allowables (summary from PESS)..

Buckling codes:	BE1 to BE7:	Flange local buckling
	Fcc:	Flange crippling
	IRB:	Inter-rivet buckling of attached skin

Summary of Lower Flange PESS Applied Crippling Stress

Rib	Flange (STRINGER) ID	Rib Lower Flange Crippling Stress vs Load Case [MPa]						
		2001	3002	3003	3053	3054	4004	5005
IB	37010	12.9	0.0	18.6	0.1	0.1	0.0	0.0
1a	37011	38.7	11.9	57.5	0.6	0.7	11.8	9.9
2	37020	5.8	11.2	9.9	0.6	0.6	10.9	10.1
2a	37021	2.0	81.7	3.3	0.2	0.3	80.6	77.2
2b	37022	28.4	18.5	42.6	0.1	0.1	18.6	18.2
3	37030	2.5	32.5	6.2	0.4	0.8	31.3	31.2
4	37040	0.0	10.5	4.9	0.8	0.9	8.6	7.9
5	37050	5.2	10.1	14.0	0.4	0.7	6.6	6.3
6	37060	0.3	13.1	9.8	1.0	1.3	13.0	13.0
7	37070	0.5	14.5	7.4	0.0	0.0	14.4	15.3
8	37080	0.1	16.6	5.6	0.8	1.0	15.5	16.7
9	37090	0.0	22.6	8.4	0.5	0.6	18.7	17.9
10	37100	0.0	18.8	10.4	0.2	0.2	15.5	13.8
11	37110	2.3	9.5	9.2	0.4	0.6	7.4	7.1
12	37120	0.0	10.0	4.3	0.0	0.3	8.0	7.7
OB	37131	1.9	9.5	2.7	0.0	0.0	6.9	6.8
OB	37132	8.6	36.4	15.5	0.4	0.5	23.3	23.0

Table 2-133 Rib lower flange applied crippling stress (summary from PESS).

Summary of Lower Flange PESS Buckling & Strength Critical RF's

Rib	Flange (STRINGER)	Buckling RF (PESS)			Buckle Criteria	Strength RF		
		LC	Type	RF		LC	Type	RF
IB	37010	3003	F_IRB_AF_Mid	8.70	PASS	4004	STRENGTH_Mid	16.71
1a	37011	3003	F_IRB_AF_Mid	2.82	PASS	4004	STRENGTH_Mid	5.55
2	37020	3002	F_IRB_AF_Mid	14.49	PASS	5005	STRENGTH_Mid	29.40
2a	37021	3002	F_IRB_AF_Mid	1.98	PASS	3003	STRENGTH_Mid	8.29
2b	37022	3003	F_IRB_AF_Mid	3.80	PASS	4004	STRENGTH_Mid	7.17
3	37030	2001	F_CRIP_Mid	4.24	PASS	2001	STRENGTH_Mid	28.91
4	37040	2001	F_CRIP_Mid	14.69	PASS	2001	STRENGTH_Mid	131.28
5	37050	3002	F_CRIP_Mid	9.86	PASS	5005	STRENGTH_Mid	57.38
6	37060	2001	F_CRIP_Mid	10.52	PASS	2001	STRENGTH_Mid	69.38
7	37070	5005	F_IRB_AF_Mid	10.61	PASS	2001	STRENGTH_Mid	65.88
8	37080	4004	F_CRIP_Mid	8.27	PASS	2001	STRENGTH_Mid	70.55
9	37090	2001	F_CRIP_Mid	5.10	PASS	2001	STRENGTH_Mid	82.69
10	37100	2001	F_CRIP_Mid	6.13	PASS	2001	STRENGTH_Mid	105.20
11	37110	2001	F_CRIP_Mid	11.97	PASS	2001	STRENGTH_Mid	123.78
12	37120	2001	F_CRIP_Mid	14.04	PASS	2001	STRENGTH_Mid	192.70
OB	37131	3002	F_IRB_AF_Mid	17.14	PASS	5005	STRENGTH_Mid	455.07
OB	37132	3002	F_IRB_AF_Mid	4.45	PASS	3002	STRENGTH_Mid	21.24

Table 2-134 Rib lower flanges critical RF's.

Lower Cap Instability

Critical load case: 3002

Critical flange Lower cap rib 2a PESS "stringer" Id. 37021

Critical RF = 1.98 **RF = 1.98**

No buckling below ultimate

Lower Cap Strength

Critical load case: 4004

Critical flange: Lower cap rib 1a PESS "stringer" Id. 37011

Critical RF = 5.55 **RF = >2.00**

2.5.11.7 Rib Flange to Upper Skin Joint

A single row of fasteners is used to join a rib to the upper skin. A typical arrangement is shown in Figure 2-80.

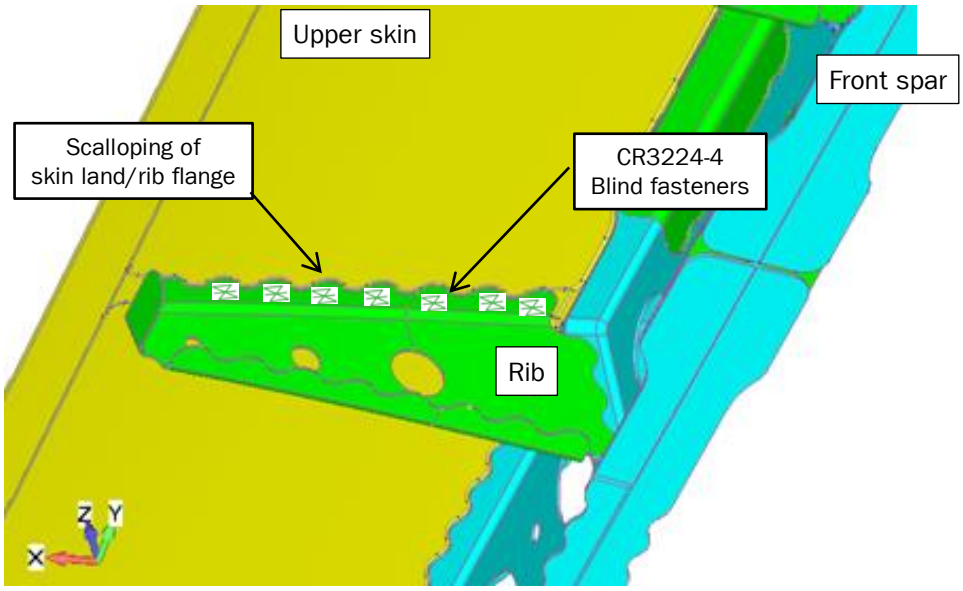

Figure 2-80 Typical rib upper flange to upper skin joint (rib 3 shown)

Geometry and Allowables

Joint details used by calculation file [2] are given in appendix E, Table 6-14. See under heading *Rib Upper Flange, Box zone*. Table 2-135 summarizes joint details and allowables.

Rib	PANEL ID [rib web]	Fastener Details				Shear Allow	Rib Bearing Allowable			Skin Bearing Allowable			Allowable Flux		
		Type	Dash No.	Dia	No	/Fastener	trib	Mat_{rib}	/Fastener	t_{land}	Mat_{skin}	/Fastener	Shear	Bearing	Mode
				mm		N.	mm		N.	mm		N.	N/mm	N/mm	
1	35010	CR3224	4	3.2	10	2565	1.00	2124-T851	1035	1.20	2024-T3	1260	131.9	64.8	Bearing
1a	35011	CR3224	4	3.2	11	2565	1.60	2024-T42	2100	1.20	2024-T3	1260	147.5	72.4	Bearing
2	35020	CR3224	4	3.2	9	2565	1.30	2024-T42	1870	1.30	2024-T3	1334	122.3	63.6	Bearing
3	35030	CR3224	4	3.2	8	2565	1.00	2024-T42	1530	1.30	2024-T3	1334	113.5	59.0	Bearing
4	35040	CR3224	4	3.2	8	2565	0.80	2024-T42	1260	1.20	2024-T3	1260	118.8	58.3	Bearing
5	35050	CR3224	4	3.2	8	2565	0.80	2024-T42	1260	1.20	2024-T3	1260	105.0	51.6	Bearing
6	35060	CR3224	4	3.2	8	2565	0.80	2024-T42	1260	1.20	2024-T3	1260	110.4	54.2	Bearing
7	35070	CR3224	4	3.2	8	2565	1.00	2024-T42	1530	1.20	2024-T3	1260	114.3	56.2	Bearing
8	35080	CR3224	4	3.2	8	2565	0.80	2024-T42	1260	1.20	2024-T3	1260	118.5	58.2	Bearing
9	35090	CR3224	4	3.2	7	2565	0.60	2024-T42	990	1.20	2024-T3	1260	109.4	53.7	Bearing
10	35100	CR3224	4	3.2	7	2565	0.60	2024-T42	990	1.20	2024-T3	1260	116.0	57.0	Bearing
11	35110	CR3224	4	3.2	6	2565	0.60	2024-T42	990	1.20	2024-T3	1260	105.7	51.9	Bearing
12	35120	CR3224	4	3.2	5	2565	0.80	2024-T42	1260	1.20	2024-T3	1260	92.3	45.3	Bearing
13	35130	CR3224	4	3.2	5	2565	1.00	2124-T851	1035	1.60	2024-T3	1680	111.2	72.8	Bearing

Table 2-135 Rib to upper skin joint details.

Load Extraction

The following primary assumption is made for determining fastener loading:

- Fastener loading flux is determined from rib web shear flux(s) (see Figure 2-81).

Fastener loading along the fastener line is extracted from a PESS Panel_LoadExtraction.xlsx file. A separate file has been generated for each aileron angle. These intermediate loading files are then imported into calculation file [2].
The calculation file collates all joint details, loading, allowables and generates a set of RF's.
PESS generates loading in a single (rib) coordinate system. The ribs are not rectangular panels; hence loading along edges has to be transformed to align with the fastener row see Figure 2-81.
A loading simplification has been assumed:

- Fastener "tension" is assumed to = 0.0 N.
- Fastener "shear" is assumed to be the load resultant

i.e. $Fxy_{fastener} = ([Fx_{PESS}]^2+[Fy_{PESS}]^2)^{0.5}$

The rib to skin fasteners are also subject to an additional load when the upper panels buckle at < ultimate load (but > limit load). The load increment due to diagonal tension is given in Table 2-138. This load increment is determined in the calculation file [2] by sheet: *U_Skin DT.*

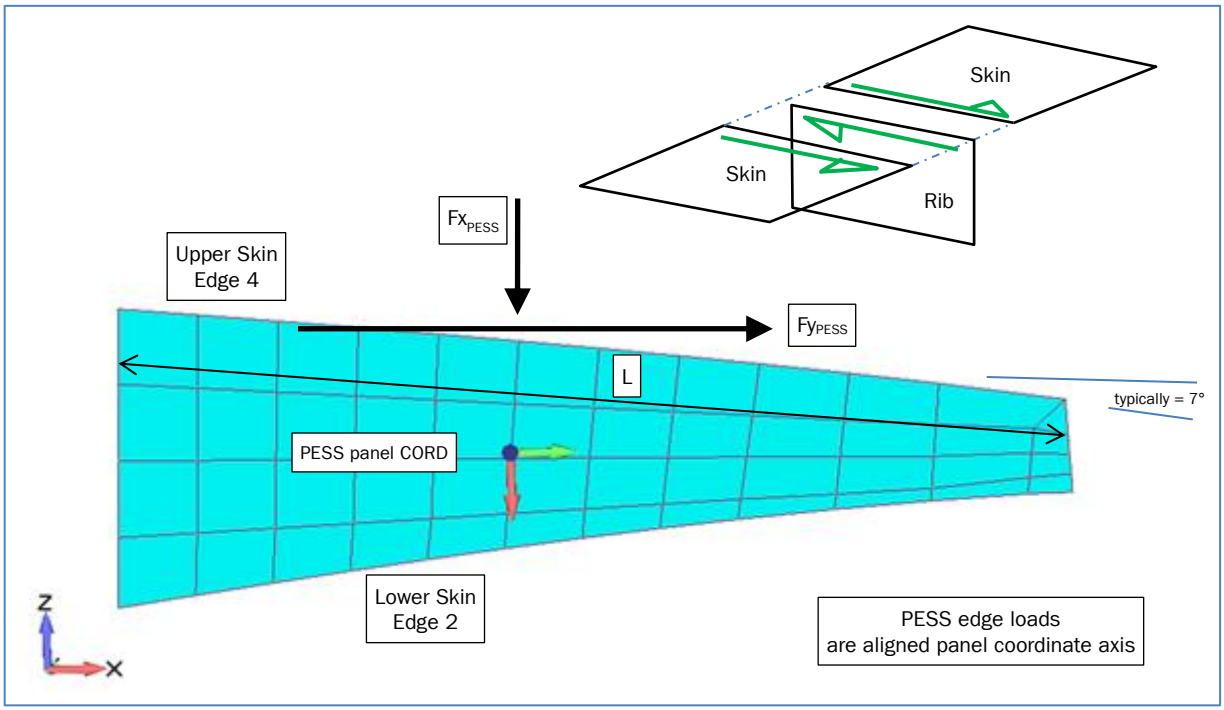

Figure 2-81 Relationship between rib web panel, edge loads and reaction in to skin.

The combination of load cases, number of ribs and each rib having four edges makes it infeasible to detailed loading tables in this part of the report. Condensed loading tables together with a worked example of the critical case follow.

Fastener Axial Load from Aerodynamic Pressure

- Axial fastener loading resulting from applied aerodynamic forces have been ignored.

This will be justified by examples, see Table 2-136.

Load Case	Panel	Panel Area mm2	Panel Ult. Load N.	Average Pressure Mpa	Periphery Fasteners >	Load /Fastener N.
2001	Upper Skin Panel 12030	37296	-19.5	-5.23E-04	36	-0.5
3002		37296	521.1	1.40E-02	36	14.5
3003		37296	-694.8	-1.86E-02	36	-19.3
4004		37296	437.55	1.17E-02	36	12.2
5005		37296	358.05	9.60E-03	36	9.9
2001	Lower Skin Panel 22040	34922	-58.5	-1.68E-03	36	-1.6
3002		34922	430.35	1.23E-02	36	12.0
3003		34922	358.65	1.03E-02	36	10.0
4004		34922	328.8	9.42E-03	36	9.1
5005		34922	285.9	8.19E-03	36	7.9

Table 2-136 Skin panel aerodynamic forces

Panel forces determined from FEM [1] using FEMAP *Sum Forces* tool.
Reference coordinate: C2710001 (aileron hinge coord)

Maximum axial force = 20. N. Negligible.

Summary of Reserve Factors: Upper Rib Flanges to Skin Panels

Upper rib - Upper skin Joint											
Rib	PANEL ID	Rib Upper Cap - Skin Joint Ult. Reserve Factor vs Load Case Id							Critcal RF's		
Id.	[-]	2001	3002	3003	3053	3054	4004	5005	LC	Mode	RF
1	35010	224.76	30.52	86.71	503.30	567.61	42.53	34.61	3002	Bearing	30.52
1a	35011	26.07	15.60	24.17	404.43	421.62	18.04	21.22	3002	Bearing	15.60
2	35020	11.50	6.95	8.57	136.46	108.74	6.55	8.23	4004	Bearing	6.55
3	35030	154.14	19.30	31.19	427.47	552.85	21.37	16.68	5005	Bearing	16.68
4	35040	58.22	20.51	28.08	206.02	230.65	23.61	37.20	3002	Bearing	20.51
5	35050	105.85	53.51	34.98	641.48	514.85	78.69	54.60	3003	Bearing	34.98
6	35060	27.30	15.66	19.76	254.76	162.73	13.89	16.97	4004	Bearing	13.89
7	35070	27.64	11.66	13.63	554.80	2047.57	10.73	3.34	5005	Bearing	3.34
8	35080	34.85	21.27	23.35	613.53	289.63	18.09	3.90	5005	Bearing	3.90
9	35090	32.94	22.62	19.69	1665.46	1203.65	19.31	3.63	5005	Bearing	3.63
10	35100	32.07	22.36	24.21	7582.98	2235.52	19.28	18.15	5005	Bearing	18.15
11	35110	28.67	20.57	34.11	1611.82	886.01	17.94	17.81	5005	Bearing	17.81
12	35120	27.63	24.12	49.84	5578.07	996.00	19.94	23.25	4004	Bearing	19.94
OB	35130	52.95	68.04	184.16	21994.63	3967.09	197.51	88.48	2001	Bearing	52.95

Table 2-137 Rib upper flange to skin joint RF summary.

Rib Flange to Upper skin Joint

Critical Load case = 5005

Critical Rib: R7 PESS "Stringer" Id: 35070

Joint Failure Mode = Fastener bearing.

Critical Ultimate RF **RF = >2.00**

Worked Example: Critical Rib Flange to Upper Skin Joint

From Table 2-137, critical combination is: Rib 7 / load case 5005

The PESS loading is aligned with the panel (rectangular) coordinate system. Fastener loading needs to be aligned with the fastener line. Simplify loading transformation to fastener line aligned as follows:

Fastener Tension/compression Fx is assumed to be negligible.

Fastener shear $Fxy = SQRT(Fx_{PESS}^2 + Fxy_{PESS}^2)$

Loading increment from diagonal tension is directly added to aligned PESS Fxy load.

Condensed loading tables; DFEM results + increment due to diagonal tension.

Load Case: 5005			PESS Edge 4 Loading										
Ultimate Loads			Total on Joint Edge		Aligned Running Load		U skin Panel ID		Running Load (DT)	Running Load Total		RF	Fastener
Rib	PANEL ID	Length	Fx	Fy	Fx	Fxy	IB	OB	Resultant	Fx	Fxy		Mode
	[rib]	mm	N.		N/mm				N/mm	N/mm			
1	35010	194.5	-107.8	-347.7	0.00	1.87	-	12010	0.00	0.0	1.9	34.61	Bearing
1a	35011	191.3	-234.3	-609.5	0.00	3.41	12010	12020	0.00	0.0	3.4	21.23	Bearing
2	35020	188.8	-11.8	1458.2	0.00	7.72	12020	12030	0.00	0.0	7.7	8.23	Bearing
3	35030	180.8	-181.1	-613.5	0.00	3.54	12030	12040	0.00	0.0	3.5	16.68	Bearing
4	35040	172.8	-74.0	260.6	0.00	1.57	12040	12050	0.00	0.0	1.6	37.20	Bearing
5	35050	195.4	-147.9	-110.5	0.00	0.94	12050	12060	0.00	0.0	0.9	54.61	Bearing
6	35060	185.9	-143.2	576.2	0.00	3.19	12060	12070	0.00	0.0	3.2	16.98	Bearing
7	35070	179.5	-119.9	846.5	0.00	4.76	12070	12080	12.02	0.0	16.8	3.35	Bearing
8	35080	173.1	-132.0	454.5	0.00	2.73	12080	12090	12.17	0.0	14.9	3.91	Bearing
9	35090	164.2	-123.5	411.0	0.00	2.61	12090	12100	12.17	0.0	14.8	3.63	Bearing
10	35100	154.8	-111.1	473.0	0.00	3.14	12100	12110	0.00	0.0	3.1	18.15	Bearing
11	35110	145.6	-100.9	412.3	0.00	2.92	12110	12120	0.00	0.0	2.9	17.81	Bearing
12	35120	138.9	-104.8	249.9	0.00	1.95	12120	12130	0.00	0.0	2.0	23.25	Bearing
13	35130	115.4	-88.0	-35.7	0.00	0.82	12130	-	0.00	0.0	0.8	88.48	Bearing

Table 2-138 Upper rib flange to upper skin joint loads.

The cord-wise length of the upper flange is (Panel 35070) = 179.5 mm

Total load on rib panel edge 4	Fx = 119.0 N.	Table 2-138
	Fy = 846.5 N .	Table 2-138

Align forces to panel edge 4.
Assume load at right angles to flange (fastener "tension") = 0.0
Assume load along flange (fastener "shear") = $F_{resultant}$

$$F_{resultant} = (Fx^2+Fy^2)^{0.5} = (119^2+846.5^2)^{0.5} = 855.0 \text{ N.}$$

Shear load on fasteners as a flux $Fxy = F_{resultant}/L$ = 855.0/119. = 4.76 N/mm

For load case 5005 upper skin panel 8, buckling at < ultimate has occurred.
Hence a diagonal tension load component must be added.
See section 2.5.9.6 for upper skin panel DT analysis.

The ribs are assumed to be equivalent of PSM 5.3.5.6 "uprights", however estimating equivalents for PSM 5.3.5.6 Eq. 20 & 21 is problematical. Therefore:

Assume rib to skin DT component is spar cap W_{cap}*2
Require a RF >2.0 to cover uncertainties.

The factor 2 is from the assumption the panel in the next bay is equally buckled.

The DT fastener load component is a sub component of W_{cap} (PSM5.3.5.6 Eq. 18)

DT component, wcap(DT) = fs*t*(0.414*k)

The rib forms the boundary between two panels 12070 & 12080. The maximum DT component from either panel will be added to the unbuckled fastener load.

Panel 12070 $f_{s,max(LC5005)}$ = 16.4 N./mm	k = 0.000 t = 1.0mm	w_{cap}(DT) = 0.0 N/mm
Panel 12080 $f_{s,max(LC5005)}$ = 26.1 N./mm	k = 0.557 t = 1.0mm	w_{cap}(DT) = 6.01 N/mm

Total load on the fastener row = unbuckled component + DT component

Applied fastener flux Fxy = 4.76 + 6.01 + 6.01 = 16.9 N/mm

Fastener details for the rib flange/skin from Table 2-135, panel 35070 (rib 7):

Fastener type:	CR3224-4	C'sk head, blind fastener
Dia:	3.2mm	
Number of fasteners along edge:	8	
Length of rib flange:	179.5 mm	
Fastener shear allow:	2565. N.	
Bearing allow. in skins:	1260. N.	2024-T3, t= 1.2 mm
Bearing allow. in rib[39] flange:	1530. N.	2024-T42, t= 1.0 mm
Allowable flux:	= 8*1260/179.5	= 56.2 N/mm

Joint RF is allowable flux/applied flux = 56.2/16.9 **RF = >2.00**

[39] C'sk in skin, tail in rib. Therefore rib allowable is for equivalent protruding H'd (CR3223) value.

2.5.11.8 Rib Flange to Lower Skin Joint

A single row of fasteners is used to join a rib to the upper skin. A typical arrangement is shown in Figure 2-82.

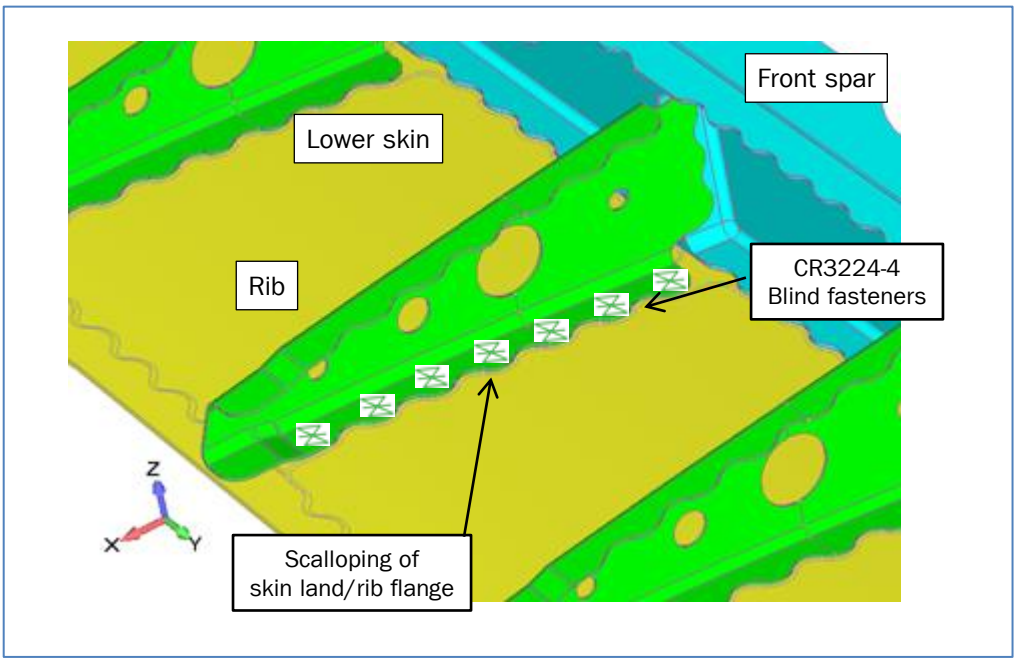

Figure 2-82 Typical rib lower flange to lower skin joint (rib 5 shown)

Geometry and Allowables

Joint details used by calculation file [2] are given in appendix E, Table 6-14 See under heading *Rib Lower Flange, Box zone*. Table 2-139 summarizes joint details and allowables.

Rib	PANEL ID [rib web]	Fastener Details				Shear Allow	Rib Bearing Allowable			Skin Bearing Allowable			Allowable Flux		
		Type	Dash No.	Dia	No	/Fastener	trib	Mat_{rib}	/Fastener	t_{land}	Mat_{skin}	/Fastener	Shear	Bearing	Mode
				mm		N.	mm		N.	mm		N.	N/mm	N/mm	
1	35010	CR3224	4	3.2	11	2565	1.10	2124-T851	1148	1.60	2024-T3	1680	147.8	96.8	Bearing
1a	35011	CR3224	4	3.2	11	2565	1.60	2024-T42	2100	1.20	2024-T3	1260	150.0	73.7	Bearing
2	35020	CR3224	4	3.2	9	2565	1.30	2024-T42	1870	1.50	2024-T3	1575	124.3	76.3	Bearing
2a	35021	CR3224	4	3.2	9	2565	1.30	2024-T42	1870	1.50	2024-T3	1575	129.8	79.7	Bearing
2b	35022	CR3224	4	3.2	9	2565	1.30	2024-T42	1870	1.50	2024-T3	1575	135.9	83.4	Bearing
3	35030	CR3224	4	3.2	8	2565	1.00	2024-T42	1530	1.50	2024-T3	1575	115.4	70.9	Bearing
4	35040	CR3224	4	3.2	8	2565	0.80	2024-T42	1260	1.50	2024-T3	1575	120.8	74.2	Bearing
5	35050	CR3224	4	3.2	8	2565	0.80	2024-T42	1260	1.20	2024-T3	1260	104.0	51.1	Bearing
6	35060	CR3224	4	3.2	8	2565	0.80	2024-T42	1260	1.20	2024-T3	1260	108.9	53.5	Bearing
7	35070	CR3224	4	3.2	8	2565	1.00	2024-T42	1530	1.20	2024-T3	1260	112.8	55.4	Bearing
8	35080	CR3224	4	3.2	8	2565	0.80	2024-T42	1260	1.20	2024-T3	1260	116.9	57.4	Bearing
9	35090	CR3224	4	3.2	7	2565	0.60	2024-T42	990	1.20	2024-T3	1260	107.9	53.0	Bearing
10	35100	CR3224	4	3.2	7	2565	0.60	2024-T42	990	1.20	2024-T3	1260	114.4	56.2	Bearing
11	35110	CR3224	4	3.2	6	2565	0.60	2024-T42	990	1.20	2024-T3	1260	104.2	51.2	Bearing
12	35120	CR3224	4	3.2	4	2565	0.80	2024-T42	1260	1.20	2024-T3	1260	72.8	35.8	Bearing
OB	35130	CR3224	4	3.2	5	2565	1.00	2124-T851	1035	1.60	2024-T3	1680	108.0	70.8	Bearing

Table 2-139 Rib to lower skin joint details

Load Extraction

The following primary assumption is made for determining fastener loading:

- Fastener loading flux is determined from rib web shear flux(s) (see Figure 2-81).

Fastener loading along the fastener line is extracted from a PESS Panel_LoadExtraction.xlsx file. A separate file has been generated for each aileron angle. These intermediate loading files are then imported into calculation file [2].
The calculation file collates all joint details, loading, allowables and generates a set of RF's.
PESS generates loading in a single (rib) coordinate system. The ribs are not rectangular panels; hence loading along edges has to be transformed to align with the fastener row see Figure 2-81.
A loading simplification has been assumed:

- Fastener "tension" is assumed to = 0.0 N.
- Fastener "shear" is assumed to be the load resultant

i.e. $Fxy_{fastener} = ([Fx_{PESS}]^2+[Fy_{PESS}]^2)^{0.5}$

The rib to skin fasteners are also subject to an additional load when the lower panels buckle at < ultimate load (but > limit load).

No lower skin panels buckle at < ultimate.

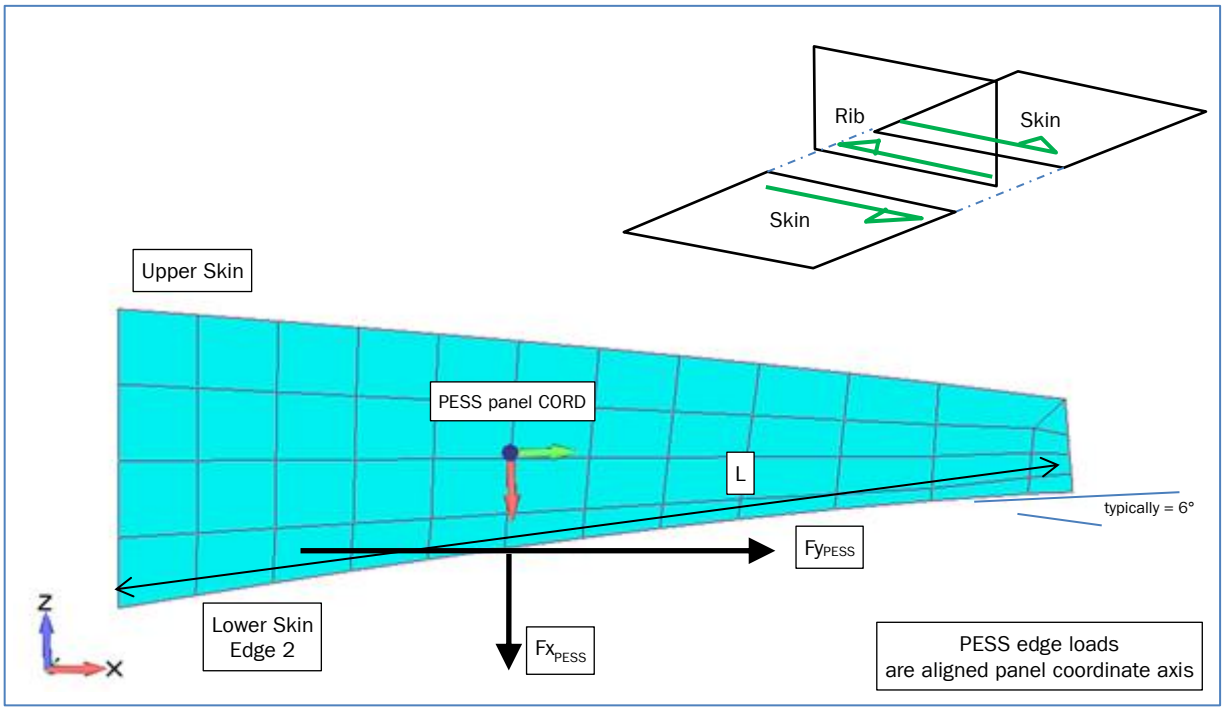

Figure 2-83 Relationship between rib web panel, edge loads and reaction in to skin.

The combination of load cases, number of ribs and each rib having four edges makes it infeasible to detailed loading tables in this report. Condensed loading tables together with a worked example of the critical case follow.

Summary of Reserve Factors: Lower Rib Flanges to Skin Panels

Lower rib - Lower skin Joint											
Rib	PANEL ID	Reserve Factor vs Load Case Id							Critcal RF's		
	[-]	2001	3002	3003	3053	3054	4004	5005	LC	Mode	RF
1	35010	101.64	31.38	65.88	222.42	221.28	36.77	34.74	3002	Bearing	31.38
1a	35011	26.79	12.78	19.09	261.08	247.40	13.27	14.11	3002	Bearing	12.78
2	35020	11.30	6.12	7.57	163.60	137.53	5.92	7.12	4004	Bearing	5.92
2a	35021	27.18	11.98	19.15	2155.57	2282.56	12.31	12.92	3002	Bearing	11.98
2b	35022	21.99	8.22	14.60	254.17	218.75	8.43	9.05	3002	Bearing	8.22
3	35030	213.57	31.85	88.36	388.23	343.93	34.60	26.47	5005	Bearing	26.47
4	35040	71.58	18.10	38.37	335.93	348.41	22.21	28.48	3002	Bearing	18.10
5	35050	115.88	49.45	35.52	449.28	425.46	58.07	104.52	3003	Bearing	35.52
6	35060	28.29	13.88	22.64	263.04	378.55	12.94	16.44	4004	Bearing	12.94
7	35070	24.53	9.05	14.12	1529.54	280.79	8.70	9.37	4004	Bearing	8.70
8	35080	34.31	16.65	25.67	513.40	601.18	15.32	18.85	4004	Bearing	15.32
9	35090	30.34	15.20	22.09	617.48	553.78	14.42	16.01	4004	Bearing	14.42
10	35100	29.38	15.68	28.15	49881.26	3429.98	14.72	14.74	4004	Bearing	14.72
11	35110	27.63	16.87	40.41	1724.54	5232.74	15.41	16.00	4004	Bearing	15.41
12	35120	21.77	16.40	42.12	10507.70	2665.33	14.16	18.12	4004	Bearing	14.16
OB	35130	48.71	85.71	235.85	29195.47	2981.15	132.53	252.98	2001	Bearing	48.71

Table 2-140 Rib lower flange to skin joint RF summary

Rib Flange to Lower skin Joint

Critical Load Case: 4004

Critical Rib: R2 PESS “Stringer” Id: 35020

Joint Failure Mode: Fastener bearing.

Critical Ultimate RF = 5.92 **RF = >2.00**

Worked Example

See example for upper skin joint.

2.5.11.9 Rib to Front Spar Joints

Attachment of the main ribs to the front spar is discussed in this section. The critical joint is for rib 1a; this rib introduces flight control system forces in to the aileron box. A separate section deals exclusively with this rib. The arrangement of rib to front spar joints is shown in Figure 2-84.

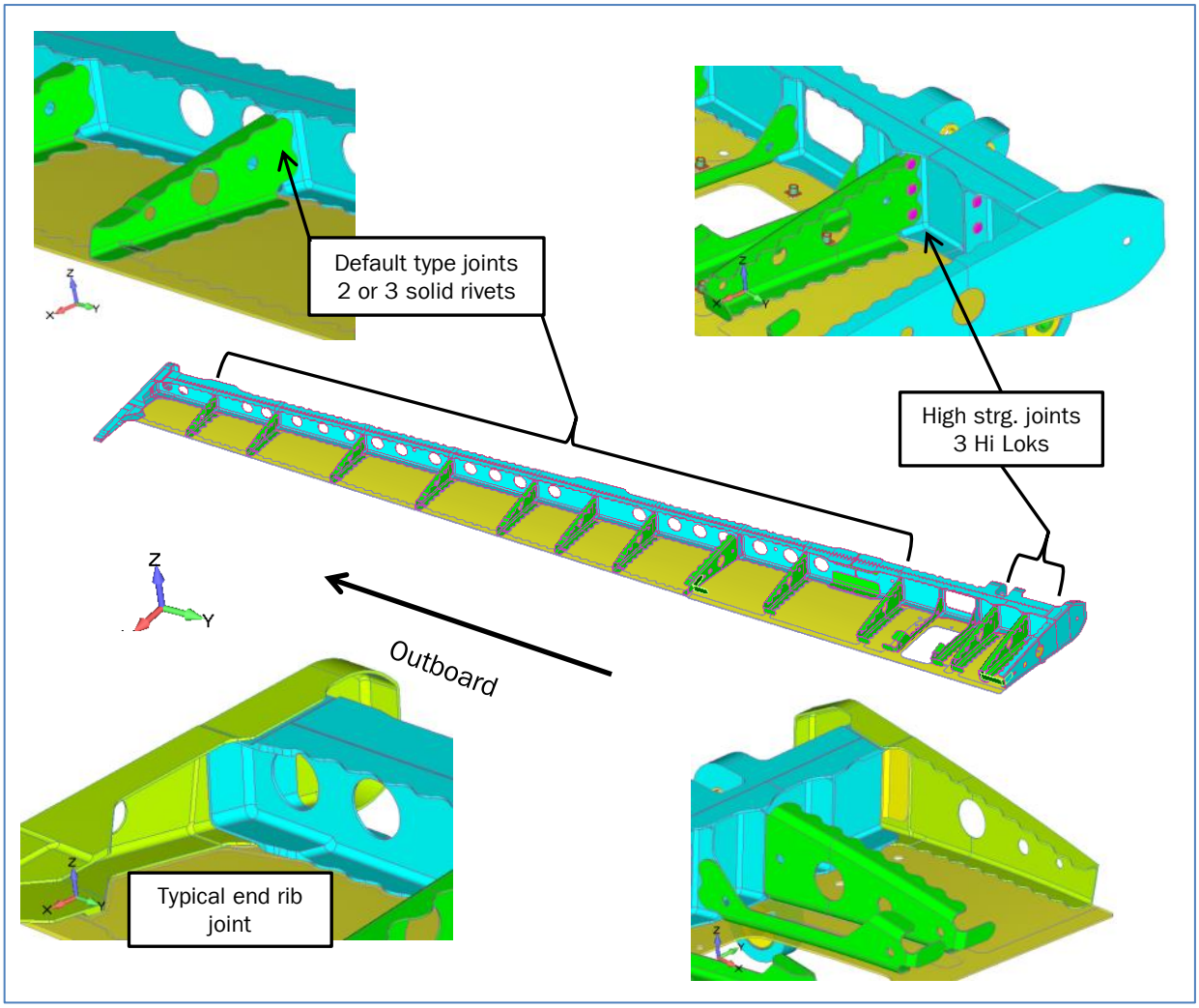

Figure 2-84 Arrangement of rib to front spar joints.

2.5.11.9.1 Rib 1a to Front spar Joint

This joint is responsible for diffusing FCS rod 9 loads into the aileron box; as such it is the most critical rib to front spar joint. For this joint alone a more detailed analysis method base on free-bodies has been employed. The joint (shown in Figure 2-85) can be decomposed into 3 elements/sub groups

Front spar upper cap to upper skin	Free-body: 2710113 Rib 1a - Fspar [upper skin]
Front spar stiffener to rib web	Free-body: 2710114 Rib 1a - Fspar [rib1a web]
Front spar stiffener to lower web	Free-body: 2710112 Rib 1a - Fspar [lower skin]

Essentially the use of three free-bodies (aligned to skin or web) replaces the classic bolt group stage of the joint analysis. For the upper and lower skin fasteners, the sub-group loading (shear and end load) is then simply divided by the number of effective fasteners and compared with the appropriate allowable. For the three web fasteners the sub group loading in addition the shear and end load has a moment component. The moment is distributed in to three fasteners by a classic bolt group approach.

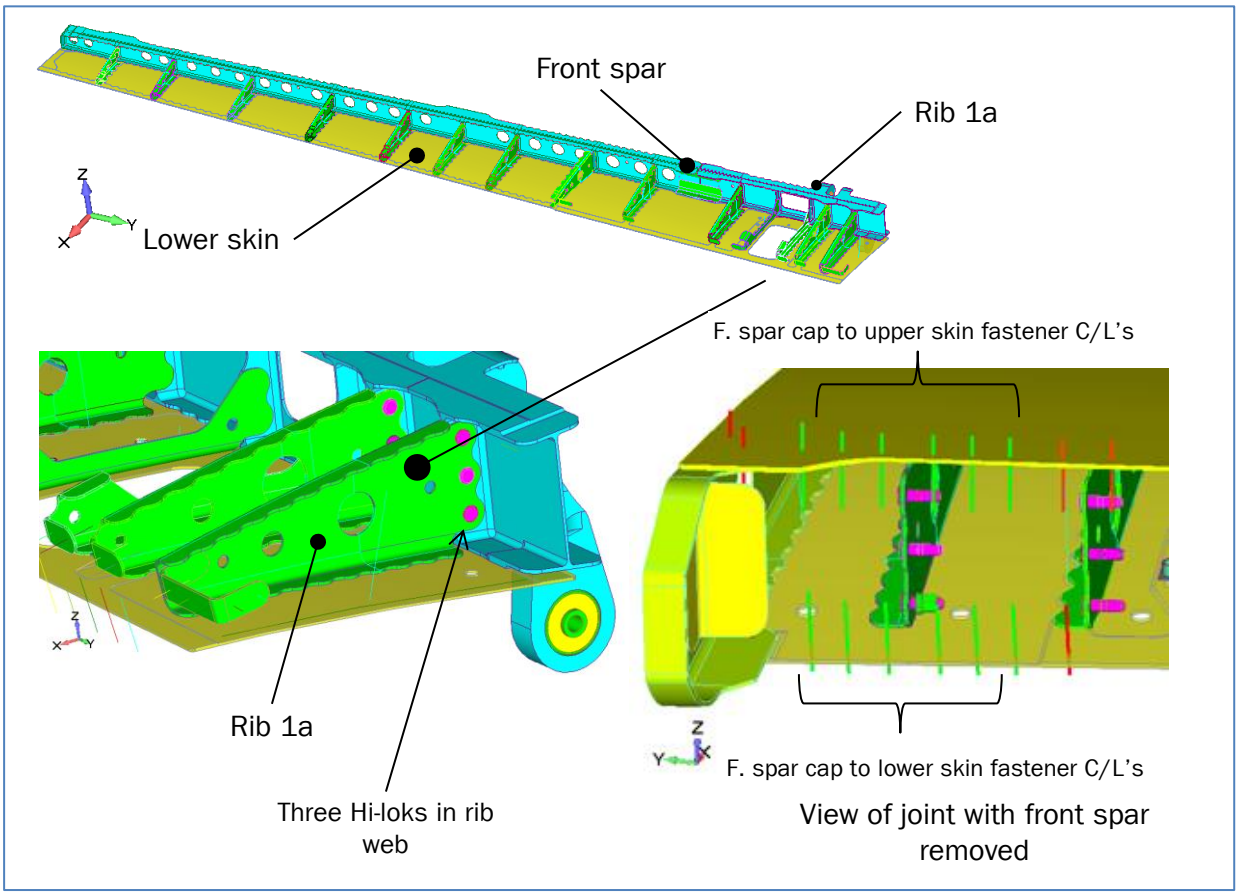

Figure 2-85 Rib 1a to front spar joint details

Joint Allowables

Fastener strength data has been taken fron ref. [4]. For skin/flange thickness values which do not match standard values, simple linear interpolation has been used. Joint fastener details and allowables are presented in Table **2-141**.

Rib	Part	Fastener Details					Shear Allow	Ultimate Allowables						Mode
								Rib Bearing			Spar or Skin Bearing			
		Type	Dash	Dia	h	No. in sub group		t_{rib}	Mat_{rib}	/Fastener	t_s	Mat_s	/Fastener	
				mm			N.	mm		N.	mm		N.	
1a	Up Skin	CR3224	4	3.20	69.3	6	2950				1.2	2024-T3	1260	Bearing
	Spar flg										1.7	2124-T851	1765	Bearing
	web	HLT412	5	4.15	38.2	3	8920	1.6	2024-T42	4760	2.0	2124-T851	6090	Bearing
	Spar flg	NAS1919M	4	3.20	69.3	6	2880				1.7	2124-T851	2735	Bearing
	Low skin										1.2	2024-T3	2166	Bearing

Table 2-141 Rib 1a to front spar joint, summary of fastener allowables.

Summary of Joint RFs

A summary of RF's for the support bracket to wing box joints is presented in Table 2-142. Following the RF summary further details of the critical free body loads for each sub group are presented.

Rib 1a Joint	Rib 1a to Front Spar Joint RF's vs Load Case									
	1081	2001	3002	3003	3053	3054	3084	4004	5005	6086
LC Safety Factor	1.0	1.5	1.5	1.5	1.5	1.5	1	1.5	1.5	1.0
Upper Skin Joint	2.46	2.14	1.21	1.61	13.35	13.18	1.67	1.23	1.47	1.09
Rib Web Joint	2.99	2.49	1.25	1.69	95.70	95.70	1.73	1.24	1.43	1.02
Lower skin Joint	2.83	2.38	1.30	1.73	51.66	51.66	1.78	1.29	1.50	1.07
Min RF =	2.46	2.14	1.21	1.61	13.35	13.18	1.67	1.23	1.43	1.02

Table 2-142 Rib 1a to front spar joint, summary of RF's.

Critical load case: 6086
Critical joint element rib web joint
Applied fastener load 4628. N.
Allowable fastener load 4760. N. Bearing critical
(Worked example page 227) **Critical RF = 1.02**

For FCS load cases (1081, 3084 & 6086) an aileron test has been carried out; hence a fitting factor is not applicable.Reference [25], ER-24-000338, Wing - Aileron Control Surface – Limit, issue 03
For all other case a fitting factor of 1.15 has been applied.

Critical Free-Body Loads and RF's

Three free bodies have been defined in the FEMAP database for FEM[2], each free-body has its own local coordinate defined aligned as appropriate for the joint element. Details are in Figure 2-86. the coordinate system are salved to the aileron hinge coordinate C2710001.
i.e. they translate and rotate as the aileron augular position changes.

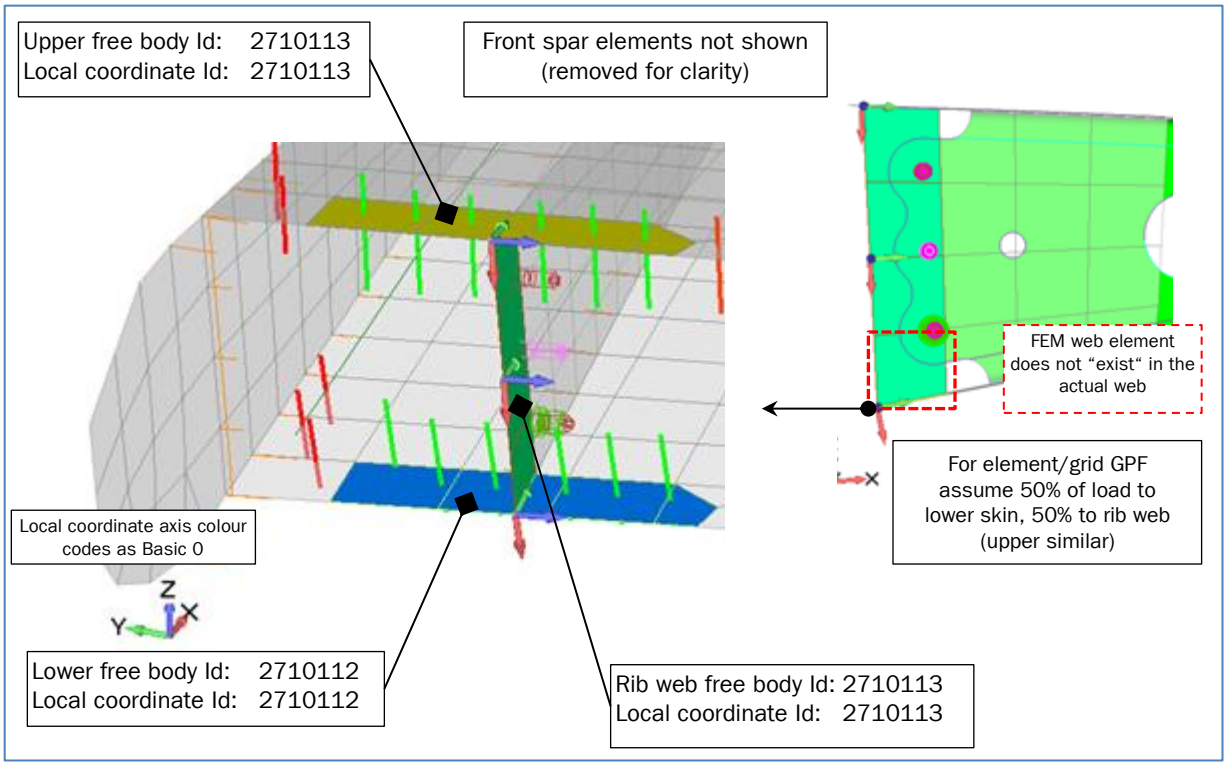

Figure 2-86 Rib 1a to front spar free bodies.

Division of Rib Web Corner GPF Loads Between the Skin and Rib Web

As can be seen in Figure 2-86, the rib web corner has a GPF from a web element/grid where no rib web fastener exists. This loading component will be manually divided between the skin free body and the rib web. The GP load and division in to the web and skin are presented in Table 2-143. These components are added in the appropriate colured table columns of Table 2-144**,** Table 2-145 and Table 2-146.

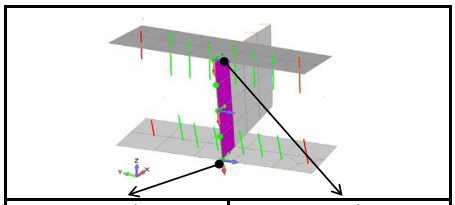

	Web E2713806/G2713826 Cord wise loading			Web E2713818/G2713822 Cord wise loading		
	% to rib	50%		% to rib	50%	
Load	% to skin	50%		% to skin	50%	
Case	Fy [N.]	to rib	to skin	Fy [N.]	to rib	to skin
2001	998	499	499	-212	-106	-106
3002	-1969	-985	-985	424	212	212
3003	1452	726	726	-326	-163	-163
4004	-1976	-988	-988	424	212	212
5005	-1710	-855	-855	359	180	180
3053	5.2	3	3	27	14	14
3054	-5.2	-3	-3	-27	-14	-14
1081	-962	-481	-481	199	100	100
3084	-1632	-816	-816	340	170	170
6086	2706	1353	1353	-553	-277	-277

Table 2-143 Rib 1a to front spar, rib web redistribution loads

Upper Skin / Spar Joint

Results from free body 2710113 for all joint relevant ultimate load (Table 2-136) cases are presented in Table 2-144.

Freebody Name:	Rib 1a - Fspar [upper skin]
Freebody Id.	2710113
Coordinate Id.	2710113
Origin:	C2710113 [0. ,0., 0.]
Elements	2710744 2710769 2710743 2710742 2710741
Grids	2713793 2713792 2713822 2713791 2713790

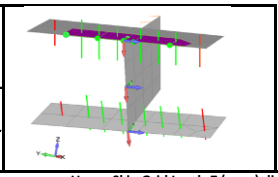

Load	Upper Skin Grid Loads Y (cord) direction [N.]									Upper Skin Grid Loads Z (span) direction [N.]							
Case	G2713793	G2713792	G2713822		G2713791	G2713790	Σ	ΣIB	ΣOB	G2713793	G2713792	G2713822	G2713791	G2713790	Σ	ΣIB	ΣOB
2001	-149	-361	-558	-106	-395	-344	-1913	-842	-1071	-23	19	-39	-539	-533	-1115	-24	-1092
3002	246	607	994	212	757	742	3558	1456	2102	69	-12	61	848	810	1776	88	1689
3003	-181	-471	-752	-163	-607	-645	-2819	-1110	-1710	-36	38	-28	-560	-525	-1111	-12	-1099
4004	245	624	997	212	772	779	3629	1474	2156	53	-43	43	784	745	1582	32	1551
5005	206	519	835	180	662	698	3100	1232	1867	54	-28	40	620	584	1270	46	1224
3053	17	20	6.8	13.5	24	79	160	47	113	-20	-50	-53	-87	-105	-315	-96.5	-219
3054	-17	-20	-6.8	13.5	-24	-79	-133	-34	-100	20	50	53	87	105	315	96.5	219
1081	148	346	540	100	378	327	1838.5	814	1025	30.3	-0.5	51	557	554.5	1192	55.3	1137
3084	220	557	848	170	656	673	3124	1286	1838	25	-61	27	658	633	1282	-23	1305
6086	-339	-890	-1332	-106	-1092	-1223	-4982	-1948	-3034	-43	118	-31	-826	-778	-1560	59.5	-1620
	<<<<< IB Grids		C/L			OB Grids >>>>>				<<<<< IB Grids		C/L		OB Grids >>>>>			

Table 2-144 Rib 1a to front spar, upper joint sub group, ultimate free body loading.

The "blue" column of figures indicates additional loading from the web (Table 2-143) is included.

The critical load case is: 6086

Load Component	No. Fast	Load	/Fast	Resultant		Units
IB End load =	3	-1948	649	IB	650	N.
OB End load =	3	-3034	1011	OB	1146	N.
IB Panel shear =	3	60	20			
OB Panel shear =	3	-1620	-540			

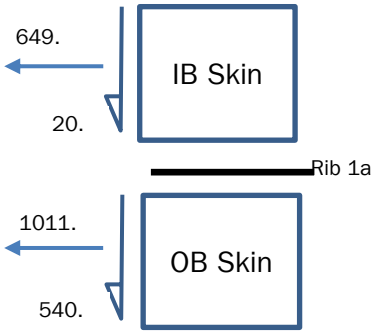

For the critical OB side:

Resultant fastener load = SQRT(540.^{2} + 1011.^{2}) = 1146. N

The fastener is	CR3224-4	C'sk blind	
Dia.	= 3.2 mm		
Fastener shear	= 2950. N.		
Bearing in skin	= 1260. N.	2024 T3	t_{skin}= 1.2 mm
Bearing in spar	= 1765. N.	2185 T851	t_{skin}= 1.7 mm
Minimum allowable	= 1260. N.	Bearing critical	

RF = allow/(fitting factor * applied) = 1260/(1146) **RF = 1.09**

Rib Web / Spar Joint

Results from free body 2710112 for all joint relevant ultimate load (Table 2-136) cases are presented in Table 2-145.

Freebody Name:	Rib 1a - Fspar [web]
Freebody Id.	2710112
Coordinate Id.	2710112
Origin:	C2710112 [0. ,0., 0.]
Elements	2713818 2713814 2713806 27113806
Grids	2713822 2713818 2713819 2713820 2713826
h [mm]	36.6 18.5 0.0 18.5 35.7

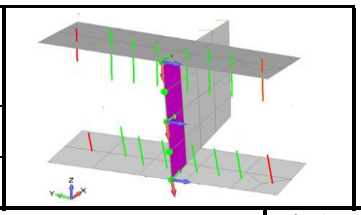

Load Case	Rib Web Loading [N.]										Joint Summation [N. & N. mm]		
	G2713822		G2713818		G2713819		G2713820		G2713826		About C2710112		
	Fx	Fy	Fx	Fy	Fx	Fy	Fx	Fy	Fx	Fy	F'x (vert)	F'y (cord)	M'z
2001	194	-106	302	-1034	-43	-580	-489	1194	-292	499	-328	-27	62912
3002	-331	212	-519	1880	148	1046	1061	-2390	591	-985	950	-236.5	-121901
3003	248	-163	417	-1409	-65	-767	-743	1788	-428	726	-571	175	91029
4004	-336	212	-544	1881	121	1035	1051	-2423	589	-988	881	-283	-122655
5005	-284	179.5	-465	1580	106	862	926	-2113	510	-855	793	-346.5	-105414
3053	12	13.5	-0.9	28	-0.7	19	0.3	13	-1.4	2.6	9	76	-679
3054	-12	-13.5	0.9	-28	0.7	-19	-0.3	-13	1.4	-2.6	-9	-76	679
1081	-190	99.5	-290	993	44	556	469	-1145	283	-481	316	22.5	-60366
3084	-296	170	-493	1572	55	849	826	-2011	477	-816	569	-236	-101639
6086	469	-276.5	818	-2476	-72	-1306	-1404	3412	-789	1353	-978	706.5	167350

Table 2-145 Rib 1a to front spar, rib web joint sub group, ultimate free body loading.

The "blue" & "orange" columns of figures indicates additional loading from the web (Table 2-143) is included.

The critical load case is: 6086

The three fasteners in the sub-group are symmetrical about the centre fastener.
Height between outer fasteners = 38.2 mm

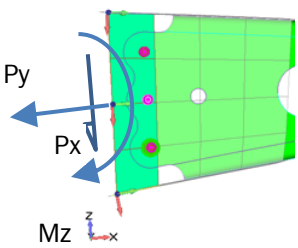

Hence

Px = F'x/3	= -978/3	= 326. N.	Shear component
Py = F'y/3	= 706.5/3	= 236. N.	End load component
Py' = M'z/(h/2)	= 167350/(38.2)	= 4381. N.	Moment component

Resultant fastener load = SQRT(326.^{2} + (236.+4381.)^2) = 4628. N

The fastener is	HLT412-5-4	P'rod Hi-Lok	
Dia.	= 4.15 mm		
Fastener shear	= 8920. N.		
Bearing in rib web	= 4760. N.	2024 T42	t_{skin}= 1.6 mm
Bearing in spar	= 6090. N.	2185 T851	t_{skin}= 2.0 mm
Minimum allowable	= 4760. N.	Bearing critical	

RF = allow/(fitting factor * applied) = 4760/(4628) **RF = 1.02**

Lower Skin / Spar Joint

Results from free body 2710112 for all joint relevant ultimate load (Table 2-136) cases are presented in Table 2-146.

Freebody Name:	Rib 1a - Fspar [lower skin]
Freebody Id.	2710112
Coordinate Id.	2710112
Origin:	C2710112 [0. ,0., 0.]
Elements	2711638 2711615 2711634 2711630 2711663
Grids	2713808 2713806 2713826 2713807 2713805

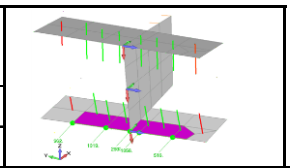

Load Case	Upper Skin Grid Loads Y (cord) direction [N.]									Upper Skin Grid Loads Z (span) direction [N.]							
	G2713808	G2713806	G2713826		G2713807	G2713805	Σ	ΣIB	ΣOB	G2713808	G2713806	G2713826	G2713807	G2713805	Σ	ΣIB	ΣOB
2001	177	653	1516	499	732	307	3884	1838	2047	-45	-140	30	572	606	1023	-170	1193
3002	-362	-1319	-2933	985	-1356	-516	-5502	-2655	-2846	78	271	5	-976	-1042	-1664	352	-2016
3003	271	1011	2177	726	1023	437	5645	2734	2912	-69	-213	0.5	698	740	1157	-282	1438
4004	-360	-1335	-2946	988	-1385	-575	-5613	-2674	-2939	94	302	16	-916	-974	-1478	404	-1882
5005	-304	-1139	-2530	-855	-1211	-533	-6572	-3136	-3437	85	268	3.8	-722	-767	-1132	355	-1487
3053	-12	-12	-3	3	32	49	57	-24	81	-13	-15	7.8	-31	-48	-99	-24	-75
3054	12	12	3	-3	-32	-49	-57	24	-81	13	15	-7.8	31	48	99	24	75
1081	-169	-627	-1457	481	-711	-296	-2779	-1284	-1495	44	132	-38	-556	-585	-1003	157	-1160
3084	-292	-1110	-2435	816	-1183	-558	-4762	-2212	-2551	100	294	46	-696	-729	-985	417	-1402
6086	459	1815	3997	1353	2012	1049	10685	4949	5736	-193	-527	-25	920	955	1130	-733	1863
	<<<<< IB Grids		C/L		OB Grids >>>>>					<<<<< IB Grids		C/L	OB Grids >>>>>				

Table 2-146 Rib 1a to front spar, lower joint sub group, ultimate free body loading.

The "grey" column of figures indicates additional loading from the web (Table 2-143) is included.

The critical load case is: 6086

Ult Load /Fastener	No. Fast	Load	/Fast	Resultant		Units
IB End load =	3	4949	1650	IB	1668	N.
OB End load =	3	5736	1912	OB	2010	N.
IB Panel shear =	3	-733	244			
OB Panel shear =	3	1863	621			

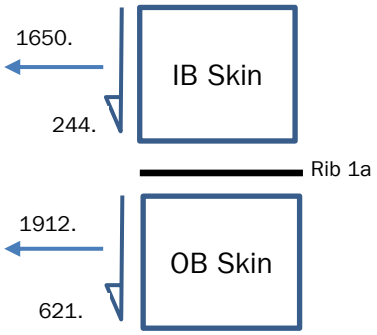

For the critical OB side:

Resultant fastener load = SQRT(1912.^{2} + 621.^{2}) = 2010. N

The fastener is NAS1919M-4 P'rod blind

Dia.	= 3.2 mm		
Fastener shear	= 2880. N.		
Bearing in skin	= 2166. N.	2024 T3	t_{skin}= 1.2 mm
Bearing in spar	= 2735. N.	2185 T851	t_{skin}= 1.7 mm
Minimum allowable	= 2166. N.	Bearing critical	

RF = allow/(fitting factor * applied) = 2166/(2010) **RF = 1.07**

2.5.11.9.2 Rib 2 to 12 Front Spar Joints

With the exception of rib 1a (see previous section) the joint analysis is based on loading extracted from PESS panel/groups. A typical rib web PESS panel and definition of edge loads is shown in Figure 2-88. The actual rib web to front spar joint is a simple two or three fastener bolt group, see Figure 2-87.

Joint Allowables

Fastener strength data has been taken from ref. [4]. Joint fastener details and allowables are presented in Table 2-147 and typical arrangements in Figure 2-87.

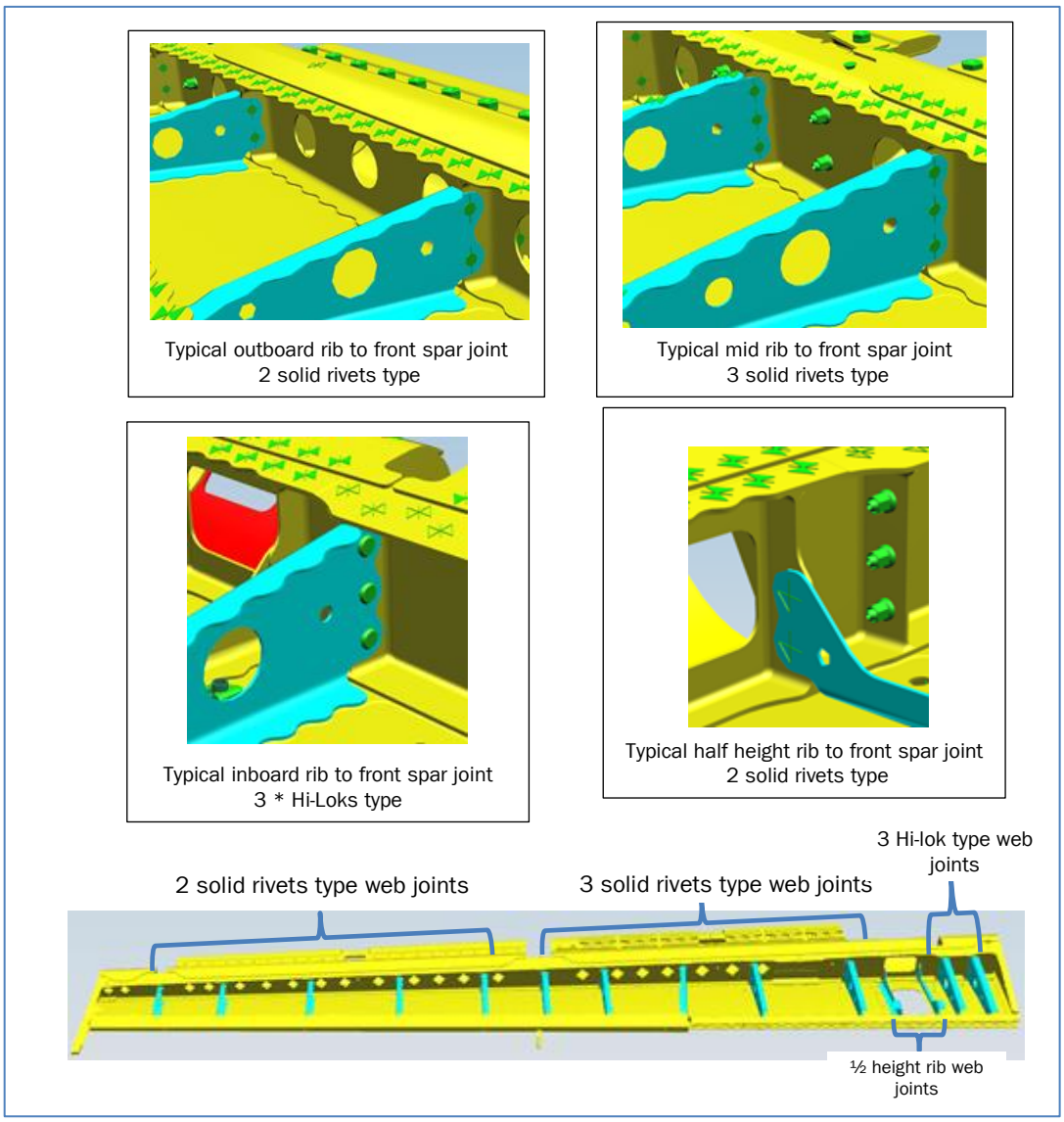

Figure 2-87 Typical rib to front spar joints.

Rib	Web Fasteners					Shear	Rib Web Bearing			Spar Stiffener Bearing		
	Type	Dash	Dia	Height	No.	Allow	t_{rib}	Mat_{rib}	/Fastener	t_{spar}	Mat_{spar}	/Fastener
			mm			N.	mm		N.	mm		N.
1a	HLT412	5	4.15	38.2	3	8920	1.6	2024-T42	4760	2.0	2124-T851	6090
2	HLT412	5	4.15	36.8	3	8920	1.3	2024-T42	4085	1.3	2124-T851	4490
2a	MS20470AD	5	4.0	16.8	2	2651	1.3	2024-T42	Shear Crt	1.3	2124-T851	Shear Crt
2b	MS20470AD	5	4.0	16.8	2	2651	1.3	2024-T42	Shear Crt	1.3	2124-T851	Shear Crt
3	MS20470AD	4	3.2	36.7	3	1730	1.0	2024-T42	1700	1.0	2124-T851	1700
4	MS20470AD	4	3.2	34.1	3	1730	0.8	2024-T42	1640	1.0	2124-T851	1700
5	MS20470AD	4	3.2	28.0	3	1730	0.8	2024-T42	1640	1.0	2124-T851	1700
6	MS20470AD	4	3.2	29.8	3	1730	0.8	2024-T42	1640	1.0	2124-T851	1700
7	MS20470AD	4	3.2	27.4	3	1730	1.0	2024-T42	1700	1.0	2124-T851	1700
8	MS20470AD	4	3.2	25.3	2	1730	0.8	2024-T42	1640	1.0	2124-T851	1700
9	MS20470AD	4	3.2	20.7	2	1730	0.6	2024-T42	1364	1.0	2124-T851	1700
10	MS20470AD	4	3.2	20.0	2	1730	0.6	2024-T42	1364	1.0	2124-T851	1700
11	MS20470AD	4	3.2	14.9	2	1730	0.6	2024-T42	1364	1.0	2124-T851	1700
12	MS20470AD	4	3.2	13.9	2	1730	0.8	2024-T42	1640	1.0	2124-T851	1700

Table 2-147 Rib to front spar joints, summary of fastener allowables.

Derivation of Fastener Loads from Panel Edge Loads

Fastener loads are determined using the PESS panel FE data module with LRM010 method selected. The Excel loading files this module outputs, present:

A (single) panel centre load vector [Fx, Fy, Fxy]; averaged from all panel element/grids.
A set of panel edge loads derived from the panel free-body (it creates).

The loading for the rib to spar joint is taken from panel edge 1 loading data. See Figure 2-88.

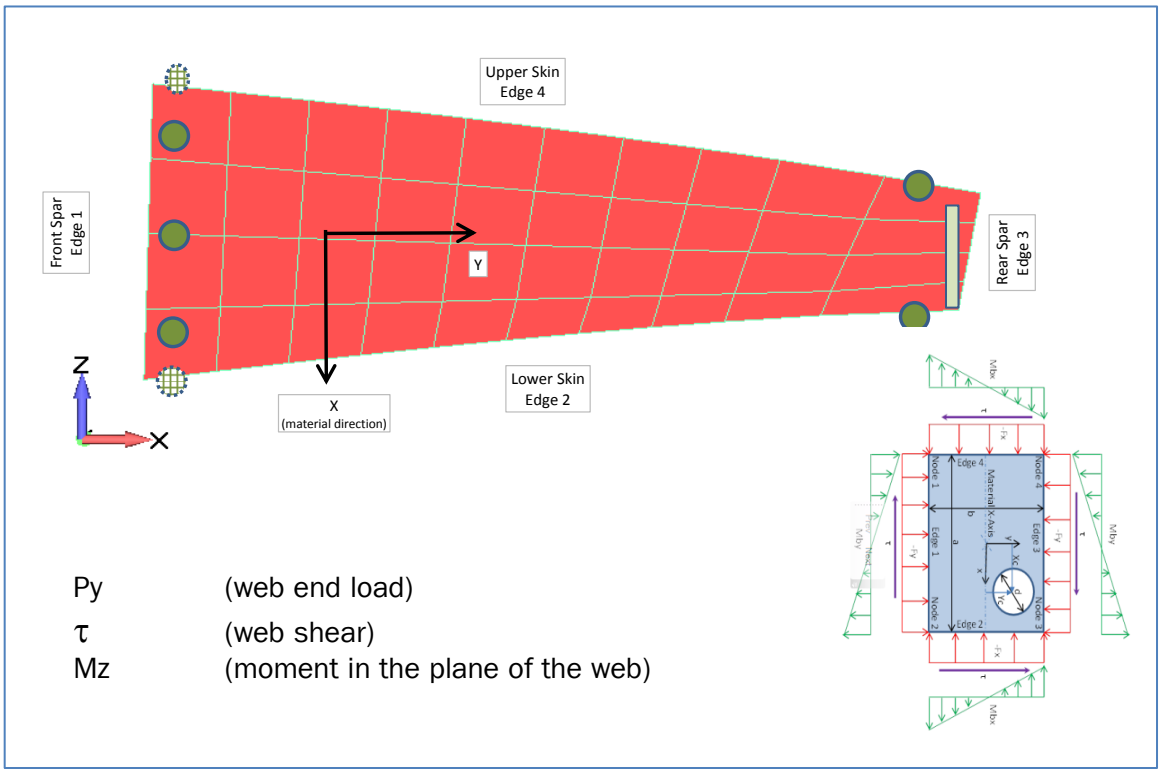

Figure 2-88 Typical PESS panel for rib webs and definition of edge loads.

The rib to front spar joint can have a significant Mz component in addition to "web" shear. The method used takes this in to account when calculating fastener loads from global joint loads.

The panel fasteners loads are determined from PESS edge components as follows:

h = height between outer fasteners

Py_{fast} = ABS(Fy_{edge1}/No of fasteners) + ABS(Mz/h)

Px_{fast} = τ_{edge1}/No of fasteners

P_{fast} = SQRT(Px_{fast}^2 + Py_{fast}^2)

Summary of Rib to Front Spar Joint RFs

A summary of RF's for the aileron box rib to front spar joints is presented in Table 2-148. Following the RF summary .

Rib	PANEL ID	Rib to Front Spar Reserve Factor vs Load Case Id							Min	Load
	[-]	2001	3002	3003	3053	3054	4004	5005	RF	Case
2	**35020**	41.24	12.33	13.14	399.11	414.47	11.62	12.11	11.62	4004
2a	**35021**	8.30	3.46	5.51	365.07	298.52	3.49	3.66	3.46	3002
2b	**35022**	7.11	3.23	4.84	118.70	107.32	3.15	3.23	3.15	4004
3	**35030**	6.62	3.48	6.48	348.29	98.34	3.42	3.32	3.32	5005
4	**35040**	33.74	8.55	55.55	47.87	52.38	10.53	9.86	8.55	3002
5	**35050**	45.52	9.39	13.43	85.43	106.94	10.46	13.69	9.39	3002
6	**35060**	69.70	12.41	24.55	60.62	55.49	15.07	16.28	12.41	3002
7	**35070**	21.01	2.85	11.70	148.50	78.91	3.28	2.88	2.85	3002
8	**35080**	70.52	7.06	36.66	88.54	62.50	8.66	7.70	7.06	3002
9	**35090**	77.93	6.81	27.18	124.19	100.51	8.68	7.63	6.81	3002
10	**35100**	48.95	8.27	22.30	739.45	412.07	10.66	9.36	8.27	3002
11	**35110**	20.68	7.02	17.33	198.99	130.04	7.98	7.51	7.02	3002
12	**35120**	133.19	8.35	100.46	1460.83	251.03	11.01	9.62	8.35	3002

Table 2-148 Rib 2 to 12, front spar joint, summary of RF's.

Critical rib: Rib 7
Critical load case 3002
Critical RF **RF = >2.0**

Expanded details for critical rib 7 and load case 3002 follow

An Excel table in Calc file [2] is used to process panel edge date and determine fastener loads as described at the beginning of this section. The processed data is present in Table 2-149.

Rib	PESS	Applied Ultimate Joint Load			Fastener Loading				Allowable*		RF	Mode
	Id	Fx	Fy	Mz	Px	Py	$Py_{(M)}$	P_{fast}	Shear	Bearing		
		N.		N. mm	N.				N.			
1a	**35011**	776.0	-484.7	-166366	259	-162	-4355	4524	8920	4760	[1]	Bearing
2	**35020**	682.6	507.0	-2642	228	169	-72	331	8920	4085	12.33	Bearing
2a	**35021**	308.5	717.2	-4861	154	359	-289	666	2305	Shear Crt	3.46	Shear
2b	**35022**	-100.4	-593.6	6989	-50	-297	416	715	2305	Shear Crt	3.23	Shear
3	**35030**	259.7	260.5	14477	87	87	394	489	1730	1700	3.48	Bearing
4	**35040**	410.1	168.0	2679	137	56	79	192	1730	1640	8.55	Bearing
5	**35050**	291.4	192.8	-2263	97	64	-81	175	1730	1640	9.39	Bearing
6	**35060**	377.2	91.3	-304	126	30	-10	132	1730	1640	12.41	Bearing
7	**35070**	334.4	257.3	13703	111	86	500	596	1730	1700	2.85	Bearing
8	**35080**	327.5	117.4	2685	164	59	106	232	1730	1640	7.06	Bearing
9	**35090**	315.1	156.6	943	158	78	46	200	1730	1364	6.81	Bearing
10	**35100**	289.7	144.5	134	145	72	7	165	1730	1364	8.27	Bearing
11	**35110**	247.5	76.4	-1665	124	38	-112	194	1730	1364	7.02	Bearing
12	**35120**	222.9	30.9	2031	111	15	146	196	1730	1640	8.35	Bearing

Table 2-149 Rib to front spar joint loads for load case 3002

The critical RF for rib 7 is presented below as a worked example. All loads are ultimate
For rib 7, height (h) between outer fasteners is 27.4 mm (from Table 2-147)

Fx	= 334.4 N.	(rib webend load)
Fy	= 257.3 N.	(rib web shear load)
Mz	= 13703 N. mm	(moment in plane of web)

Py_{fast} = ABS(Fy_{edge1}/No of fasteners) + ABS(Mz/h)
= 257.3/3 + 13703./27.4 = 585.9 N.

Px_{fast} = Fx_{edge1}/No of fasteners = 334.4/3 = 111.4 N.

P_{fast} = SQRT(Px_{fast}^2 + Py_{fast}^2) = SQRT(111.4^2 + 585.9^2) = 596.4 N

From Table 2-147, fastener details and allowables are:

The fastener type is	MS20470AD-4	P'rod solid rivet	
Dia.	= 3.2 mm		
Fastener shear	= 1730. N.		
Bearing in rib web	= 1700. N.	2024 T42	t_{skin}= 1.0 mm
Bearing in spar	= 1700. N.	2185 T851	t_{skin}= 1.0 mm
Minimum allowable	= 1700. N.	Bearing critical	

RF = allow/applied = 1700/596.4 = 2.85 **RF = >2.00**

2.5.11.10 Rib Joints to Rear Spar

The rear spar is divided into two parts, inboard and outboard. The inboard spar part provides a support for mounting the trim tab piano hinge. The outboard part provides a support for the CFRP trailing edge segments. This split also influences the type of rib to rear spar joint; in particular the rib web to spar web shear connection. Loading is higher for the inboard portion.

- Inboard shear connection via shear clips.
- Outboard no direct shear connection.

The arrangement of rear spar and ribs is shown in Figure 2-90.

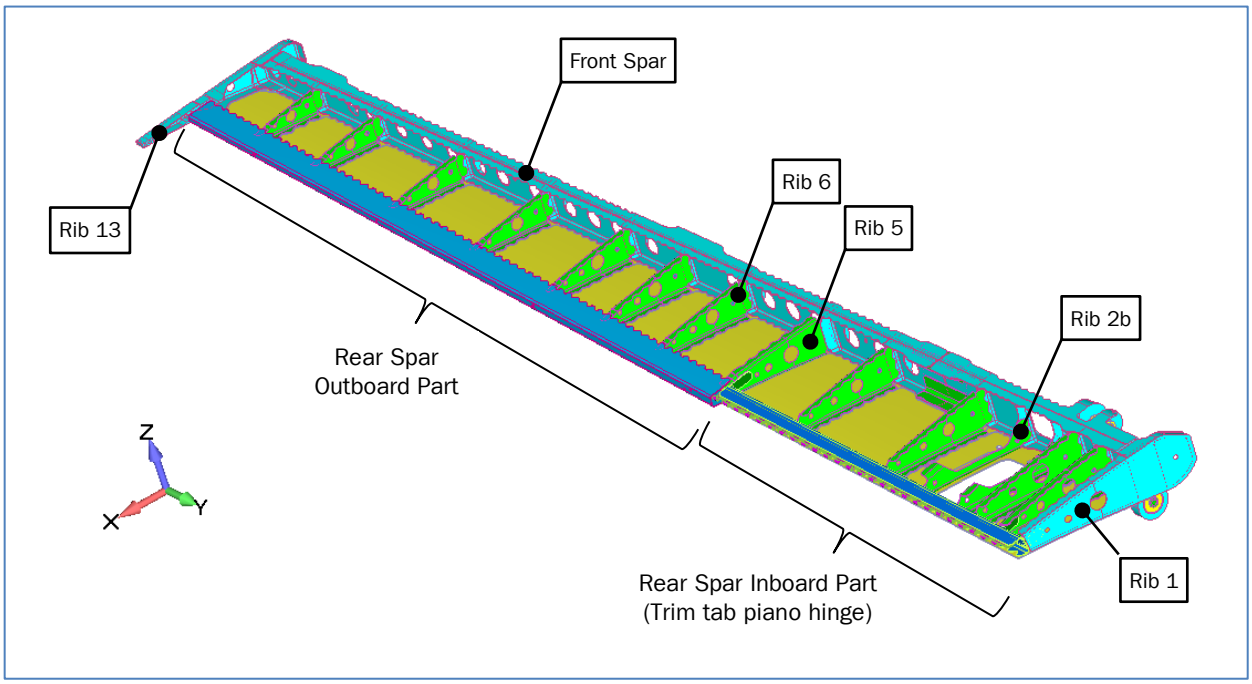

Figure 2-89 Rib to rear spar joints

A RF summary for Rib to Rear Spar Joint

Rib	PANEL ID [-]	Active LC 4004	Rib to Rear Spar Reserve Factor vs Load Case Id							Min RF	Load Case
			2001	3002	3003	3053	3054	4004	5005		
1	35010	13	31.56	11.97	23.83	65.60	63.86	13.38	12.02	11.97	3002
1a	35011	1.84	3.96	1.90	2.29	165.15	164.49	1.84	2.07	1.84	4004
2	35020	1.69	3.12	1.75	2.20	42.51	32.66	1.69	1.96	1.69	4004
2a	35021	3.75	15.74	2.97	9.69	117.81	285.35	3.75	3.06	2.97	3002
2b	35022	1.66	3.80	1.78	2.01	48.08	49.53	1.66	2.08	1.66	4004
3	35030	3.10	11.05	3.04	7.98	173.76	126.05	3.10	3.19	3.04	3002
4	35040	40.27	92.82	52.37	18.03	121.55	106.98	40.27	81.91	18.03	3003
5	35050	4.66	7.98	5.13	6.39	114.65	76.70	4.66	5.08	4.66	4004

Table 2-150 Rib to rear spar joint, inboard part summary of RF's.

Rib	PANEL ID [-]	Rib to Rear Spar Reserve Factor vs Load Case Id							Min RF	Load Case
		2001	3002	3003	3053	3054	4004	5005		
6	35060	>2	>2	>2	>2	>2	>2	>2	>2.0	All
7	35070	>2	>2	>2	>2	>2	>2	>2	>2.0	All
8	35080	>2	>2	>2	>2	>2	>2	>2	>2.0	All
9	35090	>2	>2	>2	>2	>2	>2	>2	>2.0	All
10	35100	>2	>2	>2	>2	>2	>2	>2	>2.0	All
11	35110	>2	>2	>2	>2	>2	>2	>2	>2.0	All
12	35120	>2	>2	>2	>2	>2	>2	>2	>2.0	All

Table 2-151 Rib to rear spar joint, outboard part summary of RF's.

Joint analysis details are given in the following sections 2.5.11.10.1 & 2.5.11.10.2.

2.5.11.10.1 Rib to Inboard Rear Spar Joint

The rib to rear spar joint is primarily subject to a shear force and moment, see Figure 2-90. Joint loads are determined from PESS load extraction from the FEM [2] to These forces/moments are transferred into the spar as follows:

- Rib shear force
  By a standard two fastener shear clip, see Figure 2-92
  For ribs 2 to 4 the clip is integral with the rib web
  For ribs 1, 1a and 5, a separate clip is utilised.
- Rib moment
  Differential fastener shear from rib flanges into the upper and lower skins, see Figure 2-92. The end pair of fastener transfer 100% of the moment.

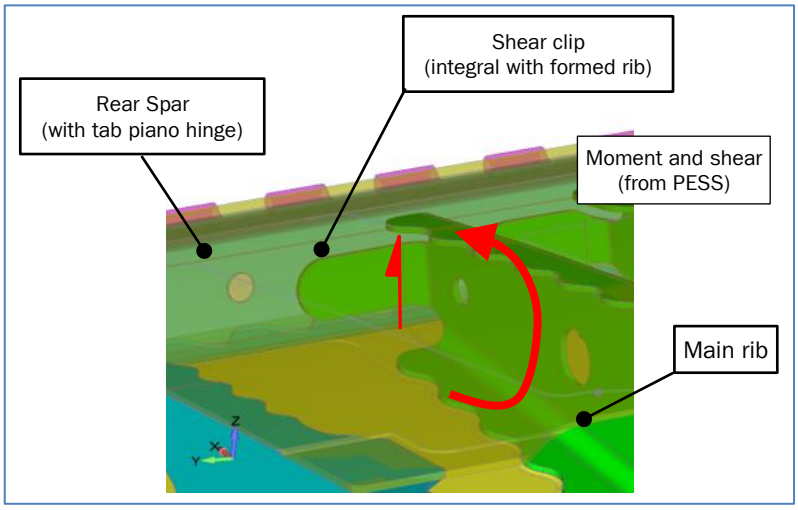

Figure 2-90 Typical rear spar joint loading (rib 2 shown)

Joint Allowables

Fastener strength data has been taken from ref. [4]. Joint fastener details and allowables are presented in Table 2-152 & Table 2-153. Typical arrangements for the inboard rear spar zone are shown in Figure 2-92.

Rib	PESS Panel Id		Fastener Details					Shear Allow	Rib Bearing			Skin Bearing		
			Type	Dash	Dia	Height	No.		t_{rib}	Mat_{rib}	/Fastener	t_{skin}	Mat_{sskin}	/Fastener
					mm			N.	mm		N.	mm		N.
1	35010	Upper	CR3224	4	3.2		1	2950	0.8	2124-T851	825	1.20	2024-T3	1260
		Web	S Clip T1			29								
		Lower	CR3224	4	3.2		1	2950	0.8	2124-T851	825	1.20	2024-T3	1260
1a	35011	Upper	CR3224	4	3.2		1	2950	1.6	2024-T42	1515	1.20	2024-T3	1260
		Web	S Clip T2			28.6								
		Lower	CR3224	4	3.2		1	2950	1.6	2024-T42	1515	1.20	2024-T3	1260
2		Upper	CR3224	4	3.2		1	2950	1.3	2024-T42	1193	1.35	2024-T3	1402
	35020	Web	S Clip T2			29.5								
		Lower	CR3224	4	3.2		1	2950	1.3	2024-T42	1193	1.55	2024-T3	1627.5
2a	35021	Web	S Clip T2			29.3			1.3	2024-T42				
		L Skin	CR3224	4	3.2		1	2950	1.3	2024-T42	1193	1.55	2024-T3	1627.5
2b	35022	Web	S Clip T2			28.7			1.3	2024-T42				
		L Skin	CR3224	4	3.2		1	2950	1.3	2024-T42	1193	1.55	2024-T3	1627.5
3		U Skin	CR3224	4	3.2		1	2950	1.0	2024-T42	930	1.35	2024-T3	1402
	35030	Web	S Clip T2			27.9								
		L Skin	CR3224	4	3.2		1	2950	1.0	2024-T42	930	1.55	2024-T3	1627.5
4		U Skin	CR3224	4	3.2		1	2950	0.8	2024-T42	750	1.25	2024-T3	1297
	35040	Web	S Clip T2			26.5								
		L Skin	CR3224	4	3.2		1	2950	0.8	2024-T42	750	1.55	2024-T3	1627.5
5		U Spar	CR3224	4	3.2		1	2950	0.8	2024-T42	750	0.80	2024-T3	825
	35050	Web	S Clip T1			22.5								
		L Spar	CR3224	4	3.2		1	2950	0.8	2024-T42	750	0.80	2024-T3	825

Table 2-152 Rib flange to skin fastener allowables (inboard rear spar zone)

Rib	Shear Clip							Fastener Details			Allowable	
	Type	Mat*	e	Pitch	t_{clip}	t_{Rspar}	t_{min}	Type	Dash	Dia	Shear	Bearing
			mm							mm	N.	
1	S Clip T1	2024-T42	10.2	16.5	1.30	1.00	1.00	MS20470AD	4	3.2	1730	1700
1a	S Clip T2	2024-T42	10.3	12.8	1.30	1.00	1.00	MS20470AD	4	3.2	1730	1700
2	S Clip T2	2024-T42	9.65	12.9	1.30	1.00	1.00	MS20470AD	4	3.2	1730	1700
2a	S Clip T2	2024-T42	9.15	12.9	1.30	1.00	1.00	MS20470AD	4	3.2	1730	1700
2b	S Clip T2	2024-T42	10.1	12.8	1.30	1.00	1.00	MS20470AD	4	3.2	1730	1700
3	S Clip T2	2024-T42	8.5	12.8	1.00	1.00	1.00	MS20470AD	4	3.2	1730	1700
4	S Clip T2	2024-T42	8.4	12.8	0.80	1.00	0.80	MS20470AD	4	3.2	1730	1640
5	S Clip T1	2024-T42	11.5	16.0	1.00	1.00	1.00	MS20470AD	4	3.2	1730	1700

Table 2-153 Rib flange to skin fastener allowables (inboard rear spar zone)

Derivation of Fastener Loads from Panel Edge Loads

The loading for the rib to spar joint is taken from PESS panel edge 3 data. See Figure 2-91.

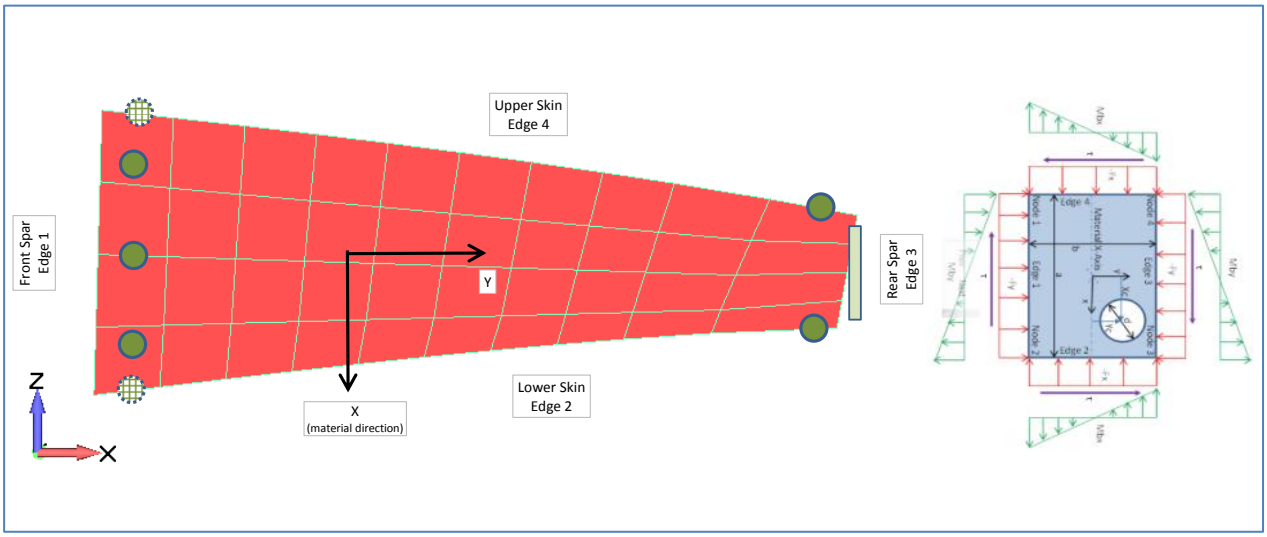

Figure 2-91 Typical PESS panel for rib webs and definition of edge loads.

Shear clip fastener loads

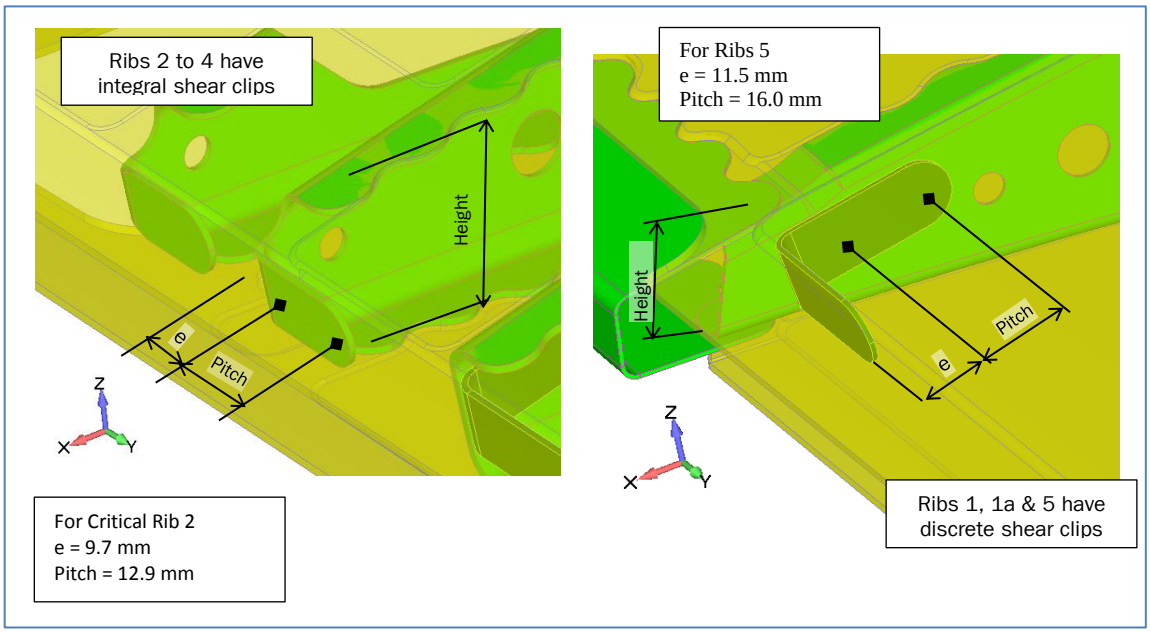

Figure 2-92 Rib to rear spar joint dimensions (inboard part)

A simple analysis method is employed. The key point is at the corner the clip moment is zero. At the centre between the two clip fasteners

$$Fv = Fx_{[PESS]}$$
$$M = Fv * (e+pitch/2)$$

From simple statics

$$P_{fast1} = Fv + M/pitch \qquad \& \; P_{fast2} = Fv - M/pitch$$

Summary of Rib 1 to 5 Joint with Rear Inboard Spar RFs

A summary of RF's for the aileron box rib to inboard rear spar joints is presented in Table 2-154. Following the RF summary a worked example is presented for the critical rib/load case.

Rib	PANEL ID	Active LC	Rib to Rear Spar Reserve Factor vs Load Case Id							Min	Load
	[-]	4004	2001	3002	3003	3053	3054	4004	5005	RF	Case
1	35010	12	27.44	10.41	20.72	57.04	55.53	11.63	10.46	10.41	3002
1a	35011	1.60	3.44	1.65	1.99	143.61	164.49	1.60	1.80	1.60	4004
2	35020	1.47	2.71	1.52	1.91	36.97	28.40	1.47	1.70	1.47	4004
2a	35021	3.26	13.69	2.59	8.91	102.44	248.13	3.26	2.66	2.59	3002
2b	35022	1.44	3.31	1.55	1.75	41.81	43.07	1.44	1.81	1.44	4004
3	35030	2.70	9.61	2.64	6.94	151.09	109.61	2.70	2.77	2.64	3002
4	35040	40.27	80.71	52.37	15.67	121.55	106.98	40.27	71.23	15.67	3003
5	35050	4.05	6.94	4.46	5.56	99.70	66.69	4.05	4.42	4.05	4004

Table 2-154 Rib 1 to 5, rear spar joint, summary of RF's.

Critical rib: Rib 2b
Critical load case 4004
Critical applied fastener load 1024. N.
Allowable fastener load 1700. N. Bearing critical
Critical RF (worked example page 240) **RF = 1.44**
RF includes a 1.15 fitting factor

Further details for critical rib 2b and load case follows.
An Excel table in Calc file [2] is used to process panel edge date and determine fastener loads as described at the beginning of this section. The processed data is present in Table 2-149.

Rib	PESS	Applied Ult Edge 3 Joint Load			Flange Fastener Loading			RF	Clip Fastener Loading			RF	Mode
	Id	Fx	Fy	Mz	Py	$Py_{(M)}$	P_{fast}		Fv	Pm	P_{fast}		
		N.	N.	N. mm	N.	N.	N. mm						
1	35010	78.4	29.2	148.9	14.6	5.1	19.7	36.36	39	88	127	11.63	Bearing
1a	35011	-511.8	102.7	215.7	51.4	7.5	58.9	12.18	-256	-668	924	1.60	Bearing
2	35020	-575.8	49.3	-1314.7	24.6	-44.6	69.2	10.37	-288	-719	1006	1.47	Bearing
2a	35021	-265.4	303.6	550.5	151.8	18.8	170.6	6.42	-133	-321	454	3.26	Bearing
2b	35022	572.3	-444.5	-1909.4	-222.2	-66.5	288.8	3.59	286	738	1024	1.44	Bearing
3	35030	329.5	-96.1	986.9	-48.0	35.4	83.4	12.44	165	384	548	2.70	Bearing
4	35040	8.2	-30.5	89.8	-15.2	3.4	18.6	55.70	4	9	14	105.11	Bearing
5	35050	-212.4	11.4	-83.6	5.7	-3.7	9.4	109.94	-106	-259	365	4.05	Bearing

Table 2-155 Rib 1 to 5, rear spar joint loading and RF's for load case 4004

The critical RF for rib 2b is presented below as a worked example. All loads are ultimate
For rib 2b, height (h) between outer fasteners is 27.4 mm (from Table 2-147)
Fx = 572.3 N (rib web shear load)
Fy = 444.5 N. (rib to r spar load)
Mz = 1909.4 N. mm (moment in plane of web)

Upper and Lower Rib Flange Fastener Loads
Height (h) between web flanges = 28.7 mm
Py = Fy/2 = 444.5/2 = 222.2 N.
$Py_{(m)}$ = Mz/h = 1909.4/29.3 = 66.5 N.
P_{fast} = Py + $Py_{(m)}$ = 222.2 + 66.5 = 288.8 N

From Table 2-152, fastener details and allowables are:
The fastener type is CR3224-4 C'sk blind rivet
Dia. = 3.2 mm
Fastener shear = 2950. N.
Bearing in rib flange = 1193. N. 2024 T42 t_{skin}= 1.3 mm
Bearing in skin = 1628. N. 2027 T3 t_{skin}= 1.55 mm
Minimum allowable = 1193. N. Bearing critical

RF = allow/applied = 1193/(1.15*288.8) = 3.59 **RF = >2.0**

RF includes a 1.15 fitting factor

Shear Clip Fastener Loads

For rib 2b e = 10.1 mm
pitch = 12.8 mm

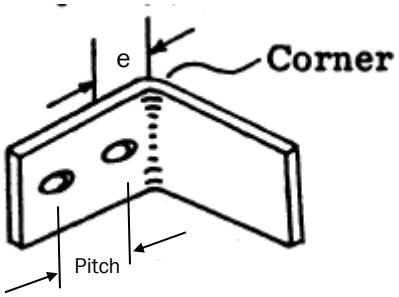

Fv	= Fx	= 572.3/2	= 286. N.
$Py_{(m)}$	= Fx*(e+pitch/2)/pitch	= 572.3*(10.1+12.8/2)/12.8	= 738 N.
P_{fast}	= Fv + $P_{(m)}$	= 286 + 738.	= 1024. N

From Table 2-152, fastener details and allowables are:

The fastener type is	MS20470AD-4	C'sk blind rivet	
Dia.	= 3.2 mm		
Fastener shear	= 1730. N.		
Minimum thickness	= 1.0 mm	R. spar = 1.0, Clip = 1.30mm	
Bearing in minimum t	= 1628. N.	2024 T42	t_{min}= 1.0mm
Minimum allowable	= 1700. N.	Bearing critical	

RF = allow/applied = 1700/(1.15*1024) **RF = 1.44**

RF includes a 1.15 fitting factor

2.5.11.10.2 Rib to Outboard Rear Spar Joints

The split between in & outboard parts of the rear spar is shown in Figure 2-89. For outboard ribs 6 to 13, the arrangement of spar joints is shown in Figure 2-93. Joint fastener details and allowables are given in Table 2-156.

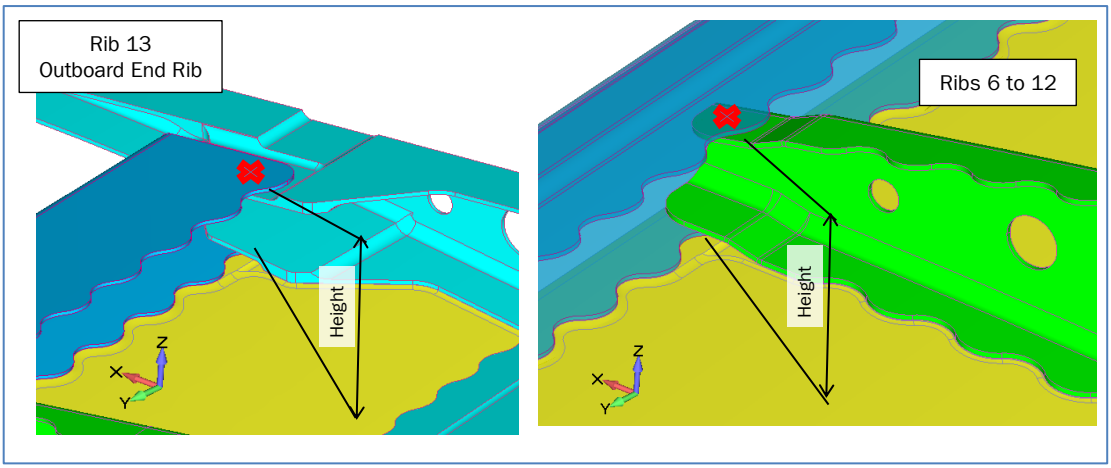

Figure 2-93 Rib to rear spar joint dimensions

Rib	Location	Fastener Details					Shear Allow	Rib Bearing			Skin or Spar Bearing		
		Type	Dash	Dia	Height	No.		t_{rib}	Mat_{rib}	/Fastener	t_{spar}	Mat_{spar}	/Fastener
				mm			N.	mm		N.	mm		N.
6	U Spar	CR3224	4	3.2		1	2950	0.8	2024-T42	1260	0.80	2024-T42	750
	Web	No shear clip or attachments			18.8								
	L Spar	CR3224	4	3.2		1	2950	0.8	2024-T42	1260	0.80	2024-T42	750
7	U Spar	CR3224	4	3.2		1	2950	1.0	2024-T42	1530	0.80	2024-T42	750
	Web	No shear clip or attachments			18.2								
	L Spar	CR3224	4	3.2		1	2950	1.0	2024-T42	1530	0.80	2024-T42	750
8	U Spar	CR3224	4	3.2		1	2950	0.8	2024-T42	1260	0.80	2024-T42	750
	Web	No shear clip or attachments			17.6								
	L Spar	CR3224	4	3.2		1	2950	0.8	2024-T42	1260	0.80	2024-T42	750
9	U Spar	CR3224	4	3.2		1	2950	0.6	2024-T42	990	0.80	2024-T42	750
	Web	No shear clip or attachments			16.8								
	L Spar	CR3224	4	3.2		1	2950	0.6	2024-T42	990	0.80	2024-T42	750
10	U Spar	CR3224	4	3.2		1	2950	0.6	2024-T42	990	0.80	2024-T42	750
	Web	No shear clip or attachments			15.9								
	L Spar	CR3224	4	3.2		1	2950	0.6	2024-T42	990	0.80	2024-T42	750
11	U Spar	CR3224	4	3.2		1	2950	0.6	2024-T42	990	0.80	2024-T42	750
	Web	No shear clip or attachments			15.0								
	L Spar	CR3224	4	3.2		1	2950	0.6	2024-T42	990	0.80	2024-T42	750
12	U Spar	CR3224	4	3.2		1	2950	0.8	2024-T42	1260	0.80	2024-T42	750
	Web	No shear clip or attachments			14.3								
	L Spar	CR3224	4	3.2		1	2950	0.8	2024-T42	1260	0.80	2024-T42	750
13	U Spar	CR3224	4	3.2		1	2950	0.8	2024-T42	1260	0.80	2024-T42	750
	Web	No shear clip or attachments			14.3								
	L Spar	CR3224	4	3.2		1	2950	0.8	2024-T42	1260	0.80	2024-T42	750

Table 2-156 Rib to outboard rear spar fastener details and allowables.

Joint loads have been extracted using the PESS panel FE data module. This module produces loading for each rib edge; edge 3 represents the rib to rear spar joint for all main ribs. A typical rib mesh and PESS edge loading key is shown in Figure 2-94.

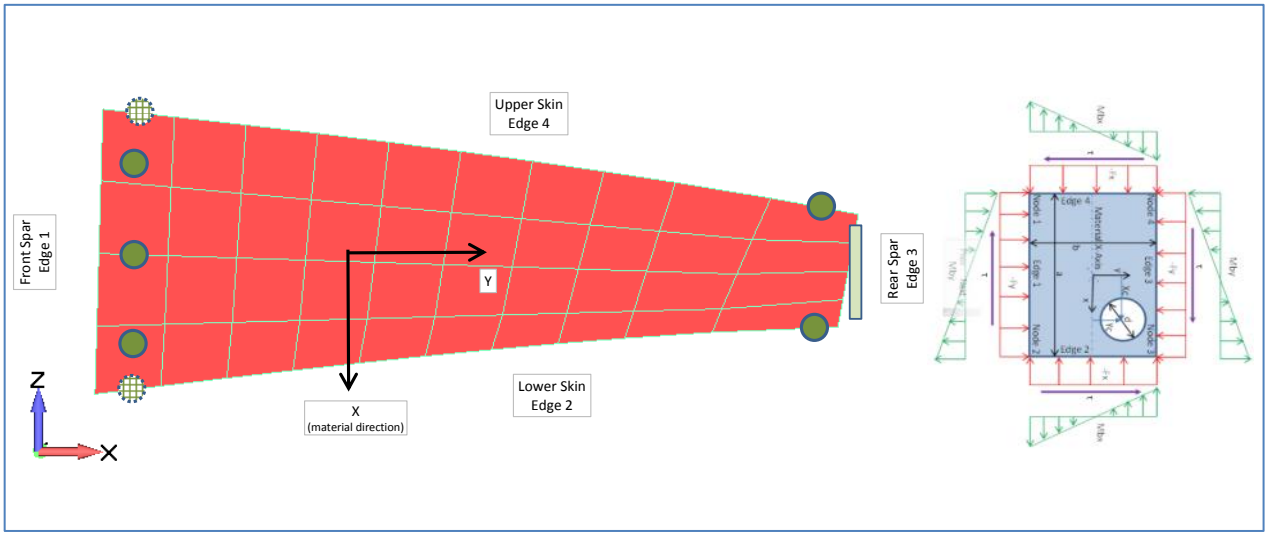

Figure 2-94 Rib mesh and definition of PESS panel loading definitions

A summary of joint loading and subsequent fastener loading is given in Table 2-157.
Shear loads are low <150 N; no direct shear load path exists. No shear joint analysis is provided, RF's are assumed to be >2.0.
The joint moment is reacted by differential shear in the upper and lower rib/spar flange end fasteners. The fastener shear load is simply the applied moment divided by the height between flanges. Joint loads are low; the presence of joggles has been ignored. All RF's for these fasteners are >2.0.

Rib	PESS Id	Applied Ultimate Joint Load			Fastener Loading				RF
		Px	Py	M	Px	Py	$Py_{(M)}$	P_{fast}	
		N.		N. mm	N.				
6	35060	-115.4	-14.6	5.7	[1]	-7.3	0.30	7.6	>2
7	35070	-149.8	-9.3	-84.7	[1]	-4.7	-4.66	9.3	>2
8	35080	-33.9	-18.2	71.6	[1]	-9.1	4.07	13.2	>2
9	35090	-19.2	-13.0	97.1	[1]	-6.5	5.78	12.3	>2
10	35100	-42.6	-10.0	67.9	[1]	-5.0	4.27	9.3	>2
11	35110	-78.8	-4.1	-1.1	[1]	-2.1	-0.07	2.1	>2
12	35120	-25.1	-3.5	15.6	[1]	-1.8	1.09	2.8	>2
13	35130	-41.0	-0.8	45.9	[1]	-0.4	3.21	3.6	>2
		From Edge 3 Panel Data							

Table 2-157 Rib to outboard rear spar joint, fastener loads and RF's.

2.5.12 Leading Edge (Mass Balance)

This section of the report documents the analysis of the leading edge assembly, see Figure 2-95. The assembly consists of:

- Upper and lower (LE) skins
- Mass balance weights for control of aileron CG position.
- A set of ribs supporting the skins and mass balance.

Summaries of analysis input data (geometry, materials etc.), load extraction, analysis and RF's are provided. Where PESS analysis modules have not been used, analyses for critical cases are illustrated by worked examples.
The LE assembly strength and buckling checks:

Upper & Lower Skins

- Strength under biaxial loading
- Panel buckling
- Skin to front spar caps joints
- Skin to balance weights joints

LE Ribs

- Strength of webs under biaxial loading
- Static strength of curved flanges
- Web buckling
- Rib web to front spar vertical stiffeners

Balance Weight

- Strength under biaxial loading

In addition to the 2D GFEM based aileron FEM's [3] to [6], an additional more detailed FEM [10] has been constructed. See Figure 2-96

The table below and Figure 2-95 & Figure 2-96 provides an overview of data for the analysis.

Part	Part No.	Calculation Files			Material
		Id	Geometry	FEM	
LE skin upper IB	557.60.24.425/26	9	Table 6-13 Table 2-104	3 & 6 10	2024 T42 sheet, S basis
LE skin upper OB	557.60.24.427/28				
LE skin lower IB	557.60.24.431/32				
LE skin lower OB	557.60.24.433/34				
LE rib 3	557.60.24.363/64	9	Table 6-21	3 & 6 10	2185 T851 plate, S basis
LE rib 4	557.60.24.365/66				
LE rib 5	557.60.24.367/68				
LE rib 6	557.60.24.369/70				
LE rib 8	557.60.24.373/74				
LE rib 9	557.60.24.375/76				
LE rib 10	557.60.24.377/78				
LE rib 11	557.60.24.379/80				
IB skin fwd mass	557.60.24.197/98 557.60.24.210	9	Table 6-20	10	Tungsten W93NICU Steel AISI321
IB skin aft mass	557.60.24.201/02 557.60.24.210 557.60.24.213				
OB skin fwd mass	557.60.24.199/200				
OB skin aft mass	557.60.24.203/04				

Table 2-158 LE balance mass, overview of calculation files, geometry and materials.

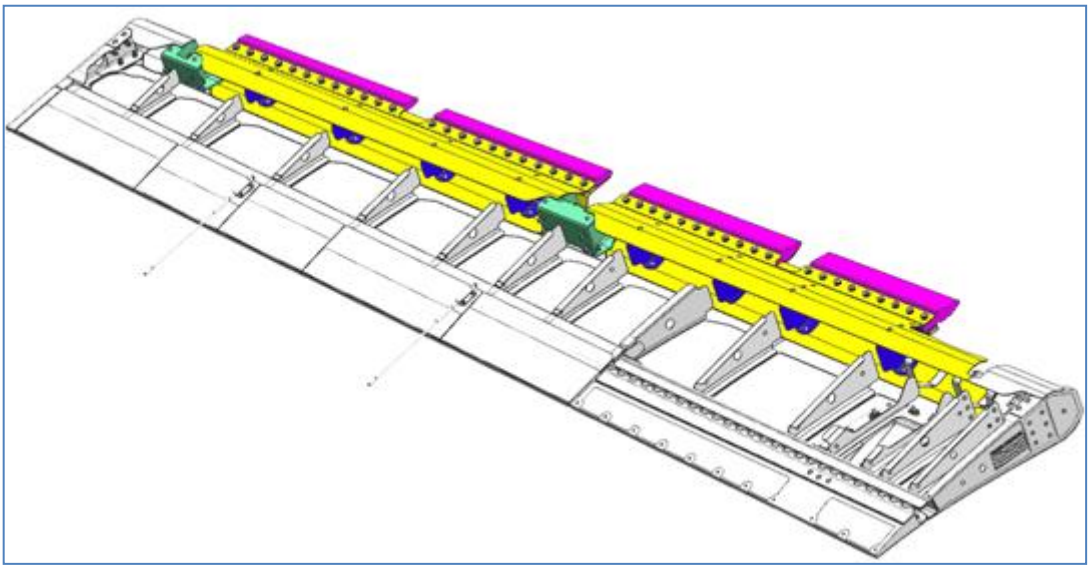

Figure 2-95 Leading edge assembly, skins, ribs and mass balance weight.

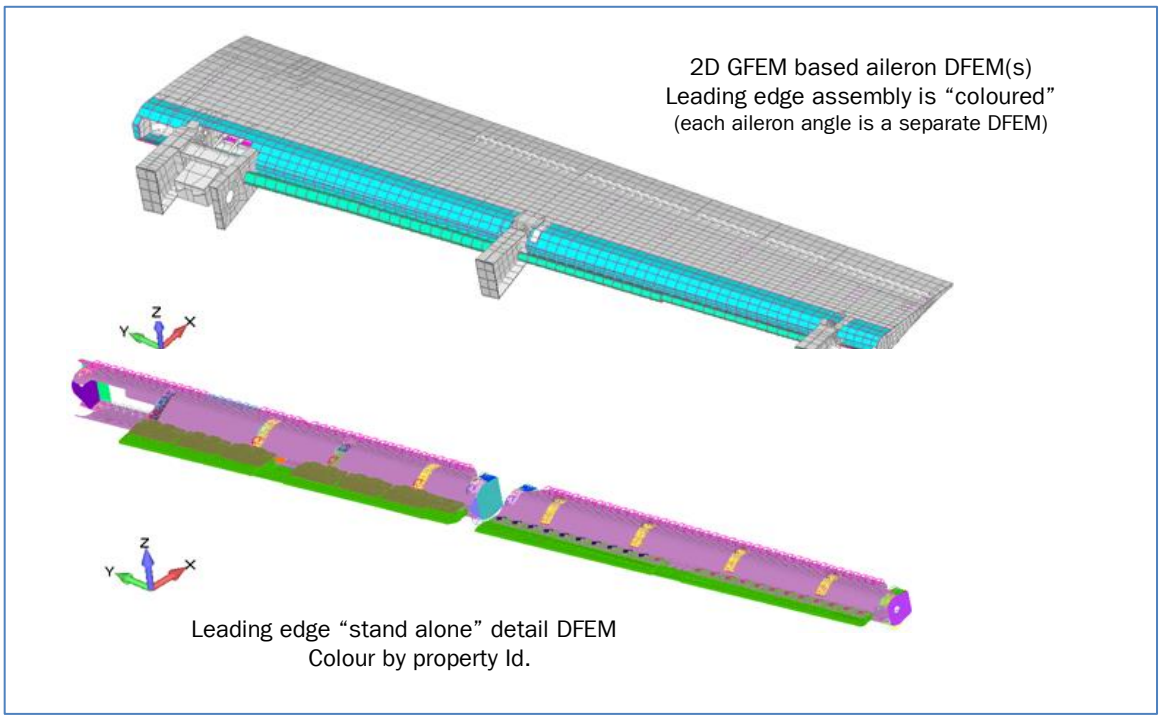

Figure 2-96 Leading edge assembly, overview of DFEMs

2.5.12.1 Load Case Applicability

Load cases applicable to the leading edge balance mass assembly are given in Table 2-159. These are a subset of those described in section 2.3 and Table 2-12.

Load Case Applicability Table for LE Balance Mass assembly						
Angle [°]	**-25**	**-22**	**0**	**3**	**10**	**15**
DFEM	**10**	**20**	**30**	**40**	**50**	**60**
Applicable Load Case Id's.	Aerodynamic + Wing Bending					
		2001	3002 3003	4004	5005	
	Flight Control System					
	None					
	Inertia					
			3051 3052			
			3053 3054			
			3055 3056			

Table 2-159 Load case applicability table for the LE balance mass assembly.

2.5.12.2 Leading Edge Upper Skin

The LE upper skin is divided into four parts:

Inboard	Part 5576024193	considered as a fairing
Hinges 1 to 2	Part 5576024425	supports balance weights
Hinges 2 to 3	Part 5576024427	supports balance weights
Outboard	Part 5576024429)	considered as a fairing

Fairing parts are uncoloured in Figure 2-95. Parts of the skin not directly connected to balance weights are considered as “fairings”.
The skin between hinge 1 the mid hinge is supported by five ribs and the skin between the mid hinge & outboard hinge by six ribs. The purpose of the ribs is to support and divide the skin into panels.

2.5.12.2.1 Geometry and Properties

The skins are press formed from 2024 T42 1.6mm sheet. Panel geometry is derived from PESS groups. PESS panel Id’s vs rib or bay locations are given in Table 2-160.

Fairing panels

Rib	R3-4	R4-5	R5-6
Bay	1	2	13
Panel id	11010	11020	11130

Mass balance support panels

Rib	R3-4	R4-5	R5-6	R6-H2	H2–R8	R8-9	R9-10	R10-11	R11-12
Bay	4	5	6	7	8	9	10	11	12
Panel id	11030	11040	11050	11060	11070	11080	11090	11100	11120

Table 2-160 LE Upper skin panels Id’s

2.5.12.2.2 Load Extraction for Upper Skin

Load extraction for both the upper and lower skins is similar. It is predominantly based on PESS with additional data from FEMAP data tables.
Load cases applicable to the upper skin are given in Table 2-159.
PESS load extraction details applicable to the LE upper skin are:

PESS Panel data conversion = Element average (LRM020) used in panel analysis[40]
PESS Panel data conversion = FBD + SC (LRM010) used in joint analysis

DFEM results are ultimate, the safety factor for all load cases = 1.5
∴ PESS LL-Factor = 0.667 & UL-Factor = 1.00

The relationship between panel and PESS load extraction orientation is shown in Figure 2-97

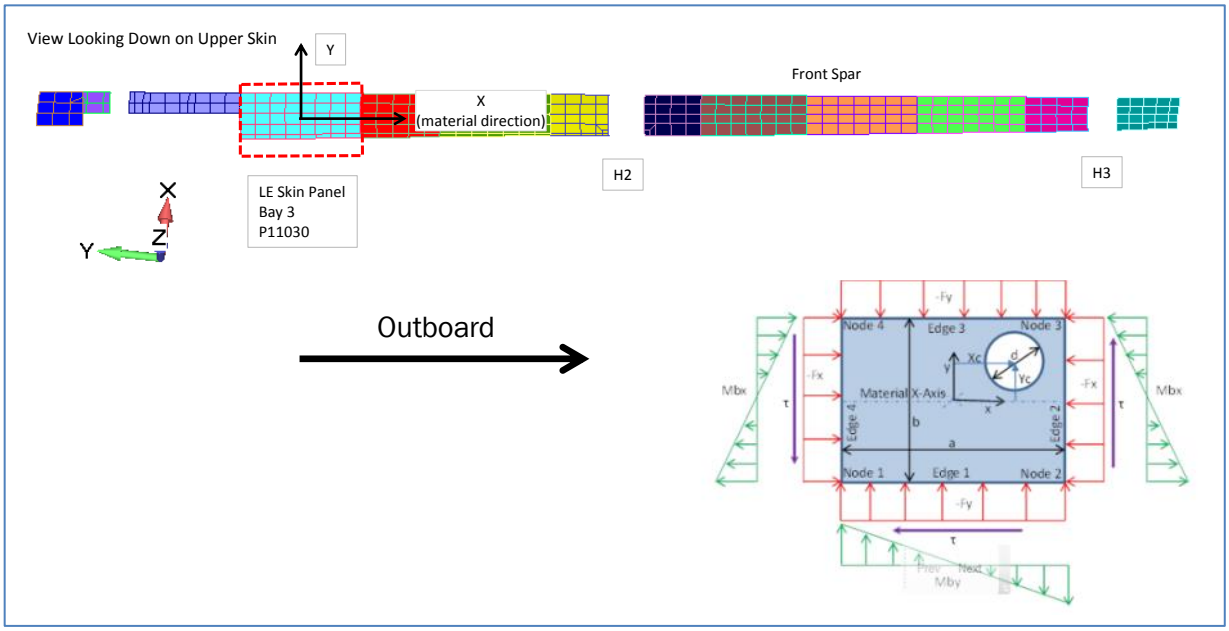

Figure 2-97 LE upper skin panel forces, key and orientation.

[40] Panels have curvature; therefore element average load extraction must be used.

2.5.12.2.3 Skin Panel Strength under Biaxial Loading

Stress data is extracted/condensed from aileron assembly FEM's [3] to [6] and the LE balance mass assembly FEM [10]. FEM [10] is focused on accurately capturing the behaviour of the balance mass assembly under inertia loading. It utilizes a much finer mesh when compared to the aileron assembly models [3] to [6].
The FE data is imported in to calculation file [9] via FEMAP data tables.
The FEMAP output summary method selected identifies elements with the max/min centre stress values for each of the load cases given in Table 2-159.
The "raw data tables" are then written to calculation file [9], worksheet: *FEMAP Skin1*.
From the "raw data" sheet the following RF summary tables are constructed.
RF criteria:

- Tension strength: Maximum principal stress vs Ftu allowable.
- Compression strength: Minimum principal stress vs Fcy allowable.

In addition to the above biaxial strength checks, panel buckling checks are performed in section 2.5.12.2.4 (follows this section).

<u>LE Upper Skin "Fairing" Panels</u>

	Maximum Principal Stress							Minimum Principal Stress						
Load Case	Element Top Surface		Element Bot Surface		Allowable		RF	Element Top Surface		Element Bot Surface		Allowable		RF
	Element Id.	Value MPa	Element Id.	Value MPa	Criteria	Value MPa		Element Id.	Value MPa	Element Id.	Value MPa	Criteria	Value MPa	
2001	2713237	24.4	2712527	27.7			15.43	2712527	-41.4	2712526	-10.1			6.84
3002	2712521	64.4	2712543	29.7			6.62	2712544	-30.1	2712521	-45.9			6.15
3003	2713237	27.9	2712521	31.2			13.68	2712521	-44.0	2712531	-20.0			6.43
3054	2712515	21.7	2712520	56.2	Ftu	427.0	7.60	2712520	-36.2	2712545	-52.7	Fcy	283.0	5.37
3055	2713237	29.0	2712537	16.7			14.71	2713239	-23.0	2712543	-11.4			12.32
4004	2712521	61.3	2712543	29.1			6.96	2712544	-28.3	2712521	-44.1			6.42
5005	2712521	47.9	2712543	29.0			8.92	2713237	-29.0	2712521	-35.3			8.00

Table 2-161 LE upper skin "fairing" panels, biaxial strength.

Not critical **RF = >2.00**

LE Upper Skin Panels Supporting Balance Masses

	Maximum Principal Stress							Minimum Principal Stress						
Load	Element Top Surface		Element Bot Surface		Allowable			Element Top Surface		Element Bot Surface		Allowable		
Case	Element Id.	Value MPa	Element Id.	Value MPa	Criteria	Value MPa	RF	Element Id.	Value MPa	Element Id.	Value MPa	Criteria	Value MPa	RF
2001	2712632	18.3	2713234	14.2			23.33	2712771	-8.9	2712651	-8.7			31.71
3002	2713234	42.8	2712651	40.5			9.96	2712632	-60.4	2713234	-69.4			4.07
3003	2712632	36.7	2712632	23.1			11.64	2712565	-16.4	2712554	-29.7			9.52
3054	2713212	4.4	2713219	2.8	Ftu	427.0	97.76	2712557	-11.2	2712549	-9.5	Fcy	283.0	25.28
3055	2713234	30.3	2712588	20.0			14.09	2712662	-32.3	2713234	-42.0			6.74
4004	2713234	38.7	2712651	37.4			11.03	2712632	-59.0	2713234	-63.4			4.46
5005	2713234	30.8	2712651	33.3			12.84	2712632	-74.9	2713234	-52.7			3.78

Table 2-162 LE upper skin mass balance support panels, biaxial strength, FEM[3] to [6]

	Maximum Principal Stress							Minimum Principal Stress						
Load	Element Top Surface		Element Bot Surface		Allowable			Element Top Surface		Element Bot Surface		Allowable		
Case	Element Id.	Value MPa	Element Id.	Value MPa	Criteria	Value MPa	RF	Element Id.	Value MPa	Element Id.	Value MPa	Criteria	Value MPa	RF
3051	21301	14.7	21296	19.8			21.51	21306	-12.4	21929	-9.5			22.82
3052	21306	12.4	21929	9.5			34.44	21301	-14.7	21296	-19.8			14.26
3053	23568	8.0	24557	9.5	Ftu	427.0	45.05	23585	-10.0	24229	-10.4	Fcy	283.0	27.28
3054	23585	10.0	24229	10.4			41.16	23568	-8.0	24557	-9.5			29.86
3055	23586	132.4	24246	50.2			3.22	24246	-55.9	23586	-134.4			2.10
3056	24246	55.9	23586	134.4			3.17	23586	-132.4	24246	-50.2			2.13

Table 2-163 LE upper skin mass balance support panels, biaxial strength, FEM[10]

Critical tension load case	3056		
Critical Bay	4		
Critical ult. applied stress	Major principal	134.4 MPa	FEM [10]
Allowable stress	Ftu	427.0 MPa	2024-T42, S basis
RF = allow/applied	427./134.4 = 3.17		**RF = >2.00**

Critical compression load case:	3055		
Critical Bay:	4		
Critical ult. applied stress	Minor principal	-134.4 MPa	FEM [10]
Allowable stress	Fcy	283.0 MPa	2024-T42, S basis
RF = allow/applied	283./134.4 = 2.10		**RF = >2.00**

2.5.12.2.4 Skin Panel Buckling Analysis

Panel buckling analysis is performed using PESS *Analysis Panel* module.

- All edges are considered as simple supports.
- Buckling criteria: No buckling < Ultimate
- All buckling RF's are relative to ultimate.

A buckling RF summary for all LE upper skin panels can be found in Table 2-166.
A summary of the buckling analysis for critical bay 7 /panel 11070 is given below; however as PESS is an approved software tool no detailed worked example will be provided. Full details for all panels and load cases can be found in calculation file [9], worksheets: *U_Skin Analysis & PESS Skins.*

<u>Summary of PESS Panel Geometry</u>
Panel geometry is derived from FEM skin panel groups and the PESS FE Data module. A summary of geometry from the PESS panel report for the skin is given in Table 2-164.
Additional geometry used by calculation file [9] (fastener types, land thickness) can be found in Appendix G Table 6-20 and Table 6-21.

Bay	PANEL ID [-]	Panel Name [-]	Type [-]	Mat [-]	Edge Constraint [-]	Basic geometry a [mm]	b [mm]	t [mm]	r [mm]
1	11010	Non structural							
2	11020	Non structural							
3	11030	Non structural							
4	11040	Uskin_LE_PANEL_	Curved	1	SSSS	200.00	68.00	1.60	82.90
5	11050	Uskin_LE_PANEL_	Curved	1	SSSS	133.00	66.00	1.60	78.30
6	11060	Uskin_LE_PANEL_	Curved	1	SSSS	181.00	64.00	1.60	73.10
7	11070	Uskin_LE_PANEL_	Curved	1	SSSS	96.00	62.00	1.60	70.20
8	11080	Uskin_LE_PANEL_	Curved	1	SSSS	93.00	62.00	1.60	58.30
9	11090	Uskin_LE_PANEL_	Curved	1	SSSS	175.00	61.00	1.60	56.30
10	11100	Uskin_LE_PANEL_	Curved	1	SSSS	183.00	59.00	1.60	53.10
11	11110	Uskin_LE_PANEL_	Curved	1	SSSS	180.00	57.00	1.60	50.00
12	11120	Uskin_LE_PANEL_	Curved	1	SSSS	104.00	55.00	1.60	47.70
13	11130	Non structural							

Table 2-164 LE upper skin panel geometry (summary from PESS).

Summary of PESS Panel Buckling Allowables

Bay	PANEL ID [-]	Standard allowables Ks [-]	Fscr [MPa]	Kc [-]	Fccr [MPa]	Kb [-]	Fbcr [MPa]	Pb [MPa]	Hole allowables Ksh/Ks [-]	kc [-]	kb [-]
1	11010	Non structural									
2	11020	Non structural									
3	11030	Non structural									
4	11040	11.74	151.89	14.10	270.97	-	-	151.98	-	-	-
5	11050	12.20	154.47	14.06	274.58	-	-	154.49	-	-	-
6	11060	11.83	155.26	14.16	278.76	-	-	155.26	-	-	-
7	11070	13.55	160.32	13.85	281.27	-	-	160.32	-	-	-
8	11080	15.07	162.95	16.44	291.13	-	-	162.95	-	-	-
9	11090	12.85	159.80	16.48	293.06	-	-	159.80	-	-	-
10	11100	12.72	161.20	16.36	296.31	-	-	161.20	-	-	-
11	11110	12.65	162.78	16.22	299.60	-	-	162.78	-	-	-
12	11120	13.38	165.88	15.87	302.22	-	-	165.88	-	-	-
13	11130	Non structural									

Table 2-165 LE upper skin panel buckling parameters (summary from PESS).

Buckling RF Summary, All Panels/Load Cases

The buckling criteria for the LE upper skins is no buckling < ultimate load.
This is indicated by a RF >1.0.

PANEL ID [-]	LC ID [-]	Analysis type [-]	Load level [-]	RF [-]	Failure Mode	Buckling Criteria	Post Buckle Required
11040	5005	Shear + Comp	100% UL	14.11	UL Buckling	PASS	No
11050	5005	Shear + Comp	100% UL	10.66	UL Buckling	PASS	No
11060	5005	Shear + Comp	100% UL	8.57	UL Buckling	PASS	No
11070	5005	Shear + Comp	100% UL	6.05	UL Buckling	PASS	No
11080	5005	Shear + Comp	100% UL	15.45	UL Buckling	PASS	No
11090	5005	Shear + Comp	100% UL	20.84	UL Buckling	PASS	No
11100	3052	Shear + Comp	100% UL	40.12	UL Buckling	PASS	No
11110	3056	Shear + Comp	100% UL	53.62	UL Buckling	PASS	No
11120	3052	Shear + Comp	100% UL	74.60	UL Buckling	PASS	No

Table 2-166 PESS buckling analysis RF summary all LE upper skin panels

Critical elastic buckling case: 5005
Critical Bay/Panel Id: Bay 7 – Panel Id 11070
Critical elastic buckling RF **RF = >2.00**

Expanded Details for Critical Panel 11070

Panel 11070 Loading

PANEL ID [-]	LC ID [-]	Fx [N/mm]	Fy [N/mm]	Fxy [N/mm]	Mx [Nmm/mm]	My [Nmm/mm]	LL factor [-]	UL factor [-]
11070	2001	6.61	3.19	10.58	-	-	0.67	1.00
11070	3002	-17.70	-8.98	-28.94	-	-	0.67	1.00
11070	3003	13.40	5.19	17.55	-	-	0.67	1.00
11070	3051	10.24	1.77	6.11	-	-	0.67	1.00
11070	3052	-10.24	-1.77	-6.11	-	-	0.67	1.00
11070	3053	3.18	0.05	1.11	-	-	0.67	1.00
11070	3054	-3.18	-0.05	-1.11	-	-	0.67	1.00
11070	3055	-9.08	-6.15	-9.10	-	-	0.67	1.00
11070	3056	9.08	6.15	9.10	-	-	0.67	1.00
11070	4004	-18.07	-8.98	-29.03	-	-	0.67	1.00
11070	5005	-27.97	-9.94	-33.42	-	-	0.67	1.00

Table 2-167 PESS loading for LE upper skin panel 11070 (summary from PESS).

Panel 11070 Buckling Results (critical LC5005)

PANEL ID [-]	LC ID [-]	Analysis type [-]	Load level [-]	RF [-]
11070	5005	Shear	100% UL	7.68
11070	5005	Comp	100% UL	16.09
11070	5005	Bending	100% UL	NA
11070	5005	Shear + Comp	100% UL	6.06
11070	5005	Shear + Bending	100% UL	NA
11070	5005	Comp + Bending	100% UL	NA
11070	5005	Shear + Comp + Bending	100% UL	NA

Table 2-168 PESS RF for LE upper skin panel/bay 7, critical LC5005 (summary from PESS)

Critical buckling is shear + compression interaction.

2.5.12.2.5 Upper Skin Joint to Front Spar

The LE upper skins are attached to the front spar via a single row of blind fasteners, the joint arrangement is shown in Figure 2-98.

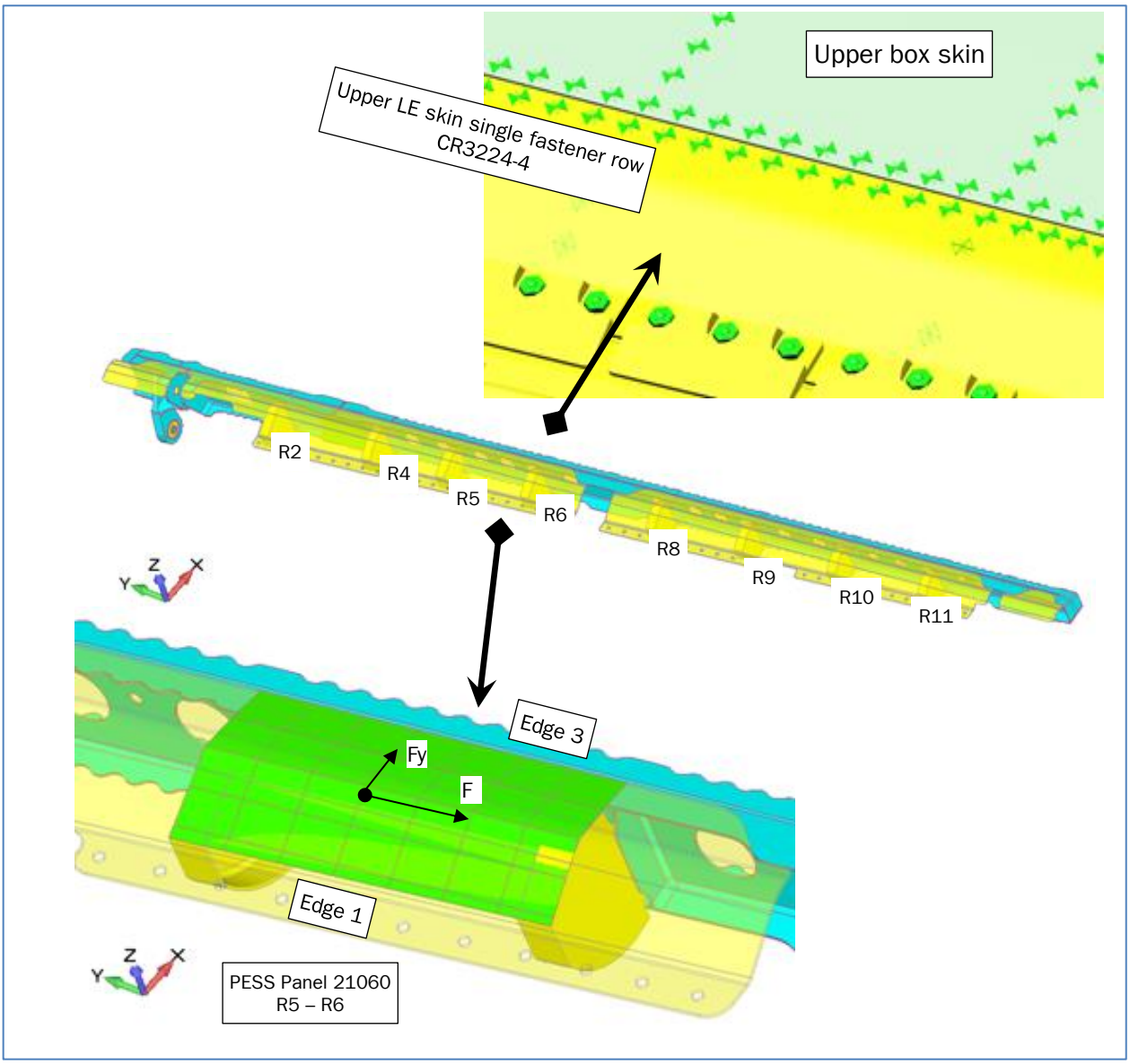

Figure 2-98 LE upper skin to front spar joint.

The approach taken is to use bay average loading

Joint Geometry and Allowables

Joint details used by calculation file [9] are given in appendix G. See under sub-heading Front Spar to LE upper skin joint. Table 2-169 summarizes joint details and allowables.

LE Bay	PANEL ID	Fastener Details				Shear Allow	Skin Bearing Allowable			Spar Bearing Allowable			Mode
	[-]	Type	Dash No.	Dia	No. off	/Fastener	tskin	Mat_{skin}	/Fastener	tspar	Mat_{spar}	/Fastener	
				mm		N.	mm		N.	mm		N.	
1	11010	CR3224	4	3.2	2	2950	1.60	2024-T42	1515	3.00	2124-T851	2550	Bearing
2	11020	CR3224	4	3.2	2	2950	1.60	2024-T42	1515	1.60	2124-T851	1680	Bearing
3	11030	CR3224	4	3.2	10	2950	1.60	2024-T42	1515	1.70	2124-T851	1765	Bearing
4	11040	CR3224	4	3.2	11	2950	1.60	2024-T42	1515	1.20	2124-T851	1260	Bearing
5	11050	CR3224	4	3.2	8	2950	1.60	2024-T42	1515	1.10	2124-T851	1148	Bearing
6	11060	CR3224	4	3.2	9	2950	1.60	2024-T42	1515	1.00	2124-T851	1035	Bearing
7	11070	CR3224	4	3.2	4	2950	1.60	2024-T42	1515	1.20	2124-T851	1260	Bearing
8	11080	CR3224	4	3.2	4	2950	1.60	2024-T42	1515	1.20	2124-T851	1260	Bearing
9	11090	CR3224	4	3.2	10	2950	1.60	2024-T42	1515	1.00	2124-T851	1035	Bearing
10	11100	CR3224	4	3.2	10	2950	1.60	2024-T42	1515	1.00	2124-T851	1035	Bearing
11	11110	CR3224	4	3.2	10	2950	1.60	2024-T42	1515	1.00	2124-T851	1035	Bearing
12	11120	CR3224	4	3.2	5	2950	1.60	2024-T42	1515	1.00	2124-T851	1035	Bearing
13	11130	CR3224	4	3.2	4	2950	1.60	2024-T42	1515	1.00	2124-T851	1035	Bearing

Table 2-169 LE Upper skin to front spar joint details.

Load Extraction

A set of PESS panel groups have been created to represent the upper LE skin. From these groups a set of intermediate PESS loading files have been generated using the PESS FE data module.

- PESS FE data module *Recovery Method:* *FBD+SC*

The joint lies along edge 3 of the PESS panel see Figure 2-98. Loading for this edge is used to determine joint fastener loads. Calculation file [9] extracts “raw” PESS data from the intermediary load files [217] to [219] and generates a table with joint/load case specific content, see Table 2-171.

Summary of Reserve Factors: LE Upper Skin to Front Spar Joint

The analysis for this joint can be found in calculation file [9]. The RF summary from this file is presented in Table 2-170.

LE Bay	PANEL ID	LE Skin to Front Spar Joint Reserve Factor vs Load Case Id										
	[-]	2001	3002	3003	3051	3052	3053	3054	3055	3056	4004	5005
4	11040	9.71	3.27	5.88	21.46	21.46	44.92	44.92	19.46	19.46	3.37	3.63
5	11050	6.95	2.85	4.75	25.08	25.08	52.04	52.04	39.79	39.79	2.82	2.92
6	11060	5.47	2.53	3.95	58.02	58.02	115.80	115.80	28.09	28.09	2.42	2.38
7	11070	6.29	3.07	4.10	19.24	19.24	70.66	70.66	7.05	7.05	2.87	2.52
8	11080	12.61	5.46	15.29	24.44	24.44	81.41	81.41	13.10	13.10	5.63	6.35
9	11090	9.46	4.50	8.96	44.98	44.98	156.70	156.70	51.42	51.42	4.48	4.17
10	11100	9.88	5.31	11.84	39.58	39.58	455.13	455.13	107.43	107.43	5.23	4.59
11	11110	15.74	13.74	28.85	22.03	22.03	1106.49	1106.49	40.86	40.86	11.88	9.74
12	11120	26.24	19.95	56.77	13.94	13.94	377.61	377.61	27.87	27.87	26.56	32.98

Table 2-170 LE Upper skin to front spar joint RF summary.

Critical Load case = 5005
Critical LE Bay = 6, PESS rib Panel Id. 11060
Joint Failure Mode = Fastener bearing.
Critical RF **= >2.00**

Worked Example: LE upper skin to front spar joint, Bay 6, LC5005

Expanded details for critical LC 5005, Bay 6 / Panel Id. 11060
Bays 1 to 3 & 13 are considered as non-structural.

Active LC: 5005 Ultimate Loads			PESS Edge 3 Loading					LE Upper Skin to Front Spar Joint		
			Total on Joint Edge		Fastener Loading			Fastener allow	RF	Mode
LE Bay	PANEL ID	Span "a"	Fx	Fy	Px	Py	Pres			
	[-]	mm	N					N.		
1	11010	74.0	Non structural						N/A	
2	11020	61.0	Non structural						N/A	
3	11030	200.0	Non structural						N/A	
4	11040	200.0	-3605.3	1242.3	-327.8	112.9	346.7	1260.0	3.63	Bearing
5	11050	133.0	-3129.1	271.8	-391.1	34.0	392.6	1147.5	2.92	Bearing
6	11060	181.0	-3902.8	-148.2	-433.6	-16.5	434.0	1035.0	2.38	Bearing
7	11070	96.0	-1470.8	-1344.8	-367.7	-336.2	498.2	1260.0	2.52	Bearing
8	11080	93.0	-755.8	241.1	-188.9	60.3	198.3	1260.0	6.35	Bearing
9	11090	175.0	-2476.9	135.5	-247.7	13.5	248.1	1035.0	4.17	Bearing
10	11100	183.0	-2249.8	100.7	-225.0	10.1	225.2	1035.0	4.59	Bearing
11	11110	180.0	-1030.9	-257.3	-103.1	-25.7	106.2	1035.0	9.74	Bearing
12	11120	104.0	72.8	-139.0	14.6	-27.8	31.4	1035.0	32.98	Bearing
13	11130	103.0	Non structural						N/A	

Table 2-171 LE upper skin to front spar joint, applied loads, fastener loads and RF (LC3002)

From Table 2-171, edge 3 loading is

Joint load for bay 6 / LC5005	Fx =	-3902.8 N.	End load
	Fy =	148.2N.	Shear load

An average fastener load for the bay is calculated from dividing the applied load by the number of fasteners.
Bay 6 has 9 span wise fasteners in a single row (Table 2-169).

Fastener load	Px	= Fx / No. of fasteners	= -3902.8/9	= 433.6 N.
	Py	= Fy / No. of fasteners	= 148.2/9	= 16.5 N.
	Pres	$= (Px^2+Py^2)^{0.5}$	$= (433.6^2+16.5^2)^{0.5}$	= 434. N.

From Table 2-169, fastener details and allowables are:

The fastener type is	CR3224-4	P'rod solid rivet	
Dia.	= 3.2 mm		
Fastener shear	= 2950. N.		
Bearing in rib web	= 1515. N.	2024 T42	t_{web}= 1.6 mm
Bearing in F. spar	= 1035. N.	2185 T851	t_{skin}= 1.0 mm
Minimum allowable	= 1035. N.	Bearing critical	

RF = Fastener allow / fastener applied = 1035./434. **RF = >2.00**

2.5.12.3 Leading Edge Lower Skin

The LE lower skin is divided into four parts:

Inboard	part 5576024195	considered as a fairing
Hinges 1 to 2	part 5576024431	supports balance weights
Hinges 2 to 3	part 5576024433	supports balance weights
Outboard	part 5576024435	considered as a fairing

Fairing parts are uncoloured in Figure 2-95. Parts of the skin not directly connected balance weights are also considered as “fairings”.
The skin between H1 & 2 is supported by five ribs and skin between H2 & H3 by six ribs. The purpose of the ribs is to support and divide the skin into panels.

2.5.12.3.1 Geometry and Properties

The skins are press formed from 2024 T42 1.6mm sheet. Panel geometry is derived from PESS groups; PESS panel Id’s are:

Fairing panels

Rib	R3-4	R4-5	R5-6
Bay	1	2	13
Panel id	21010	21020	21130

Mass balance supports

Rib	R3-4	R4-5	R5-6	R6-H2	H2–R8	R8-9	R9-10	R10-11	R11-12
Bay	4	5	6	7	8	9	10	11	12
Panel id	21030	21040	21050	21060	21070	21080	21090	21100	21120

Table 2-172 LE Lower skin panels

2.5.12.3.2 Load Extraction for Lower Skin

Load extraction for both the upper and lower skins is similar. It is predominantly based on PESS with additional data from FEMAP data tables.
Load cases applicable to the upper skin are given in
PESS load extraction details applicable to the LE upper skin are:

PESS Panel data conversion = Element average (LRM020) used in panel analysis[41]
PESS Panel data conversion = FBD + SC (LRM010) used in joint analysis

DFEM results are ultimate, the safety factor for all load cases = 1.5
∴ PESS LL-Factor = 0.667 & UL-Factor = 1.00

The relationship between panel and PESS load extraction orientation is shown in Figure 2-97

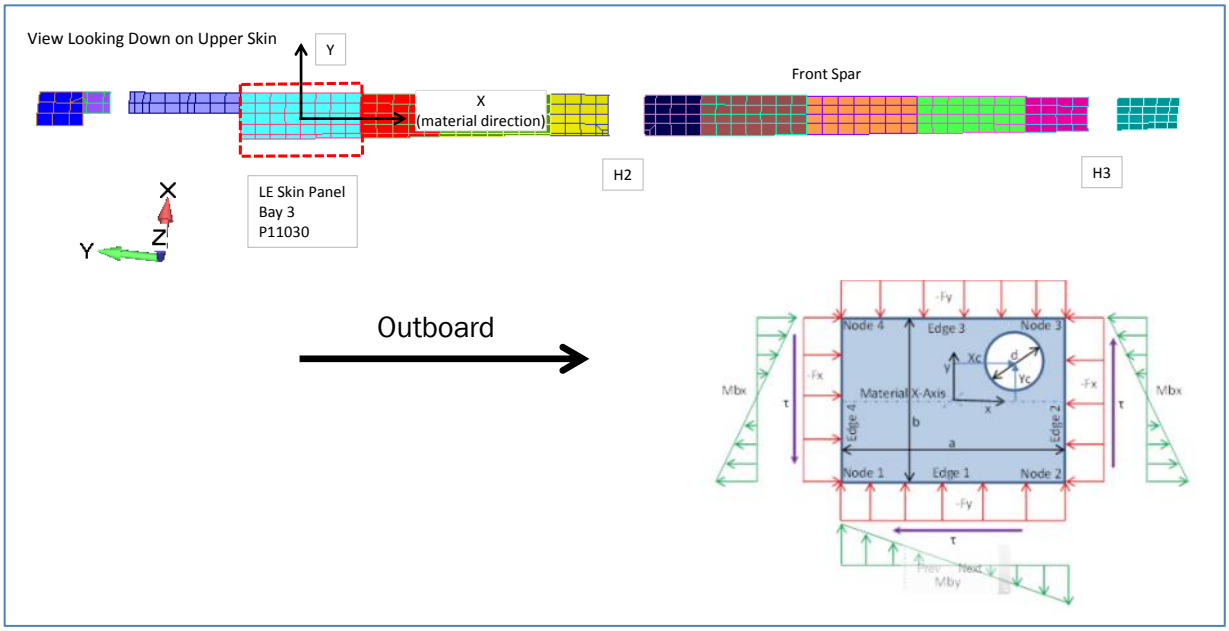

Figure 2-99 LE upper skin panel forces, key and orientation.

[41] Panels have curvature; therefore element average load extraction must be used.

2.5.12.3.3 Skin Panel Strength under Biaxial Loading

Stress data is extracted/condensed from aileron assembly FEM's [3] to [6] and the LE balance mass assembly FEM [10]. FEM [10] is focused on accurately capturing the behaviour of the balance mass assembly under inertia loading. It utilizes a much finer mesh when compared to the aileron assembly models [3] to [6].
The FE data is imported in to calculation file [9] via FEMAP data tables.
The "raw data tables" are then written to calculation file [2], worksheet: *FEMAP Ribs*
From the "raw data" sheet the following RF summary tables are constructed.
RF criteria:

- Tension strength: Maximum principal stress vs Ftu allowable.
- Compression strength: Minimum principal stress vs Fcy allowable.

In addition to the above, web buckling and stress around lightening hole checks are performed in the section 2.5.11.5 (follows this section).

In addition to the above, panel buckling checks are performed in the section (following section).

LE Lower Skin "Fairing" Panels (see table Table 2-160)

	Maximum Principal Stress							Minimum Principal Stress						
Load Case	Element Top Surface		Element Bot Surface		Allowable		RF	Element Top Surface		Element Bot Surface		Allowable		RF
	Element Id.	Value MPa	Element Id.	Value MPa	Criteria	Value MPa		Element Id.	Value MPa	Element Id.	Value MPa	Criteria	Value MPa	
2001	2712826	41.3	2714503	62.6			6.82	2712821	-25.7	2712826	-20.6			11.01
3002	2712821	45.1	2712826	37.2			9.46	2712826	-74.8	2712824	-61.9			3.78
3003	2712826	54.6	2712506	40.0			7.81	2712811	-32.1	2712822	-32.8			8.62
3054	2712822	8.9	2712815	27.0	Ftu	427.0	15.79	2712815	-14.6	2712836	-28.6	Fcy	283.0	9.90
3055	2712829	10.9	2712835	5.1			39.33	2712832	-22.9	2712836	-10.5			12.34
4004	2712811	19.8	2712826	36.2			11.78	2712820	-87.6	2712824	-62.2			3.23
5005	2712821	39.5	2712826	30.1			10.81	2712826	-61.6	2712824	-55.4			4.59

Table 2-173 LE lower skin "fairing" panels, biaxial strength.

Not critical **RF = >2.0**

LE Lower Skin Mass Balance Support Panels (see table Table 2-160)

	Maximum Principal Stress							Minimum Principal Stress						
Load Case	Element Top Surface		Element Bot Surface		Allowable		RF	Element Top Surface		Element Bot Surface		Allowable		RF
	Element Id.	Value MPa	Element Id.	Value MPa	Criteria	Value MPa		Element Id.	Value MPa	Element Id.	Value MPa	Criteria	Value MPa	
2001	2712857	9.3	2712943	11.1			38.53	2712942	-18.7	2712942	-18.1			15.13
3002	2712943	75.3	2712942	68.8			5.66	2712849	-32.7	2712943	-59.6			4.74
3003	2712967	16.8	2712943	17.8			24.01	2712942	-49.7	2712942	-47.7			5.69
3054	2712886	1.8	2712943	1.7	Ftu	427.0	231.73	2712942	-6.8	2712942	-5.9	Fcy	283.0	41.44
3055	2712942	43.0	2712942	38.3			9.93	2712884	-26.4	2712943	-24.1			10.73
4004	2712942	70.0	2712942	66.1			6.09	2712849	-31.4	2712943	-54.2			5.22
5005	2712942	83.7	2712942	76.7			5.10	2712849	-30.4	2712943	-44.8			6.31

Table 2-174 LE lower skin mass balance support panels, biaxial strength, FEM [3] to [6]

	Maximum Principal Stress							Minimum Principal Stress						
Load Case	Element Top Surface		Element Bot Surface		Allowable		RF	Element Top Surface		Element Bot Surface		Allowable		RF
	Element Id.	Value MPa	Element Id.	Value MPa	Criteria	Value MPa		Element Id.	Value MPa	Element Id.	Value MPa	Criteria	Value MPa	
3051	41961	13.7	40789	17.0			25.14	40789	-12.1	43105	-10.6			23.44
3052	40789	12.1	43105	10.6			35.37	41961	-13.7	40789	-17.0			16.66
3053	43928	6.5	43928	8.6	Ftu	427.0	49.88	41961	-7.5	43904	-9.3	Fcy	283.0	30.33
3054	41961	7.5	43904	9.3			45.77	43928	-6.5	43928	-8.6			33.06
3055	44406	60.4	40942	135.2			3.15	40487	-130.7	41295	-54.8			2.16
3056	40487	130.7	41295	54.8			3.26	44406	-60.4	40942	-135.2			2.09

Table 2-175 LE lower skin mass balance support panels, biaxial strength, FEM [10]

Critical tension load case	3055		
Critical Bay	7		
Critical ult. applied stress	Major principal	135.2 MPa	FEM [10]
Allowable stress	Ftu	427.0 MPa	2024-T42, S basis
RF = allow/applied	427./135.2 = 3.15		**RF = >2.00**

Critical compression load case	3056		
Critical Bay	4		
Critical ult. applied stress	Minor principal	-135.2 MPa	FEM [10]
Allowable stress	Fcy	283.0 MPa	2024-T42, S basis
RF = allow/applied	283./135.2 = 2.09		**RF = >2.00**

2.5.12.3.4 Skin Panel Buckling Analysis

Panel buckling analysis is performed using PESS *Analysis Panel* module.

- All edges are considered as simple supports.
- Buckling criteria: No buckling < Ultimate
- All buckling RF's are relative to ultimate.

A buckling RF summary for all LE lower skin panels can be found in Table 2-179.
A summary of the buckling analysis for critical bay 5 /panel 21050 is given below; however as PESS is an approved software tool no detailed worked example will be provided. Full details for all panels and load cases can be found in calculation file [9], worksheets: *L_Skin Analysis & PESS Skins.*

Summary of PESS Panel Geometry
Panel geometry is derived from FEM skin panel groups and the PESS FE Data module. A summary of geometry from the PESS panel report for the skin is given in Table 2-176.
Additional geometry used by calculation file [9] (fastener types, land thickness) can be found in Appendix G Table 6-20 and Table 6-21.

Bay	PANEL ID [-]	Panel Name [-]	Type [-]	Mat [-]	Edge Constraint [-]	Basic geometry a [mm]	b [mm]	t [mm]	r [mm]
1	21010	Non structural							
2	21020	Non structural							
3	21030	Non structural							
4	21040	Lskin_LE_PANEL_	Curved	1	SSSS	200.00	65.00	1.60	62.20
5	21050	Lskin_LE_PANEL_	Curved	1	SSSS	134.00	63.00	1.60	60.70
6	21060	Lskin_LE_PANEL_	Curved	1	SSSS	181.00	62.00	1.60	59.30
7	21070	Lskin_LE_PANEL_	Curved	1	SSSS	100.00	61.00	1.60	50.70
8	21080	Lskin_LE_PANEL_	Curved	1	SSSS	100.00	59.00	1.60	56.70
9	21090	Lskin_LE_PANEL_	Curved	1	SSSS	175.00	57.00	1.60	56.00
10	21100	Lskin_LE_PANEL_	Curved	1	SSSS	183.00	55.00	1.60	54.90
11	21110	Lskin_LE_PANEL_	Curved	1	SSSS	180.00	53.00	1.60	54.00
12	21120	Lskin_LE_PANEL_	Curved	1	SSSS	104.00	52.00	1.60	53.30
13	21130	Non structural							

Table 2-176 LE lower skin panel geometry (summary from PESS).

Summary of PESS Panel Buckling Allowables
The detail buckling check requested/performed by PESS are shown in Table 2-177. All buckling RF's are relative ultimate load.

Method	FC	Definition	Code	LL	UL
PSM	Buckling	Shear	0001	☐	☑
PSM	Buckling	Comp	0002	☐	☑
PSM	Buckling	Bending	0003	☐	☑
PSM	Buckling	Shear + Comp	0004	☐	☑
PSM	Buckling	Shear + Bending	0005	☐	☑
PSM	Buckling	Comp + Bending	0006	☐	☑
PSM	Buckling	Shear + Comp + Bending	0007	☐	☑
PSM	Strength	Hole Stress	0101	☐	☐
PSM	Strength	Permanent Buckling	0108	☐	☐

Table 2-177 PESS panel buckling requests for LE lower skin panels.

Bay	PANEL ID [-]	Standard allowables Ks [-]	Fscr [MPa]	Kc [-]	Fccr [MPa]	Kb [-]	Fbcr [MPa]	Pb [MPa]	Hole allowables Ksh/Ks [-]	kc [-]	kb [-]
1	21010	Non structural									
2	21020	Non structural									
3	21030	Non structural									
4	21040	12.95	156.79	16.90	287.34	-	-	156.79	-	-	-
5	21050	13.11	158.70	16.32	288.90	-	-	158.70	-	-	-
6	21060	12.70	158.70	16.19	290.26	-	-	158.70	-	-	-
7	21070	15.42	164.30	18.21	298.52	-	-	164.30	-	-	-
8	21080	13.85	163.31	15.41	293.05	-	-	163.31	-	-	-
9	21090	11.96	161.39	14.62	293.96	-	-	161.39	-	-	-
10	21100	11.58	162.35	13.94	295.23	-	-	162.35	-	-	-
11	21110	11.22	163.40	13.22	296.42	-	-	163.40	-	-	-
12	21120	11.65	165.24	12.93	297.28	-	-	165.24	-	-	-
13	21130	Non structural									

Table 2-178 LE lower skin panel buckling parameters (summary from PESS).

Buckling RF Summary, All Panels/Load Cases

The buckling criteria for the LE upper skins is no buckling < ultimate load. This is indicated by a RF >1.0.

PANEL ID [-]	LC ID [-]	Analysis type [-]	Load level [-]	RF [-]	Failure Mode	Buckling Criteria	Post Buckle Required
21040	3002	Shear + Comp	100% UL	9.61	UL Buckling	PASS	No
21050	3002	Shear + Comp	100% UL	8.35	UL Buckling	PASS	No
21060	3002	Shear + Comp	100% UL	9.54	UL Buckling	PASS	No
21070	3003	Shear + Comp	100% UL	10.45	UL Buckling	PASS	No
21080	3056	Shear + Comp	100% UL	18.70	UL Buckling	PASS	No
21090	3003	Shear + Comp	100% UL	23.51	UL Buckling	PASS	No
21100	3002	Shear + Comp	100% UL	15.25	UL Buckling	PASS	No
21110	3002	Shear + Comp	100% UL	16.27	UL Buckling	PASS	No
21120	3002	Shear + Comp	100% UL	40.05	UL Buckling	PASS	No

Table 2-179 PESS buckling analysis RF summary all LE lower skin panels

Critical elastic buckling case: 3002
Critical Bay/Panel Id: Bay 5 – Panel Id 21050
Critical elastic buckling RF **RF = >2.00**

Expanded Details for Critical Panel 21070

Panel 21070 Loading

PANEL ID [-]	LC ID [-]	Fx [N/mm]	Fy [N/mm]	Fxy [N/mm]	Mx [Nmm/mm]	My [Nmm/mm]	LL factor [-]	UL factor [-]
21070	2001	-5.57	-3.08	9.07	-	-	0.67	1.00
21070	3002	19.22	9.67	-26.60	-	-	0.67	1.00
21070	3003	-19.44	-6.48	19.05	-	-	0.67	1.00
21070	3051	11.01	1.85	-6.14	-	-	0.67	1.00
21070	3052	-11.01	-1.85	6.14	-	-	0.67	1.00
21070	3053	3.67	0.36	-1.62	-	-	0.67	1.00
21070	3054	-3.67	-0.36	1.62	-	-	0.67	1.00
21070	3055	10.63	5.83	-9.56	-	-	0.67	1.00
21070	3056	-10.63	-5.83	9.56	-	-	0.67	1.00
21070	4004	19.03	9.53	-26.44	-	-	0.67	1.00
21070	5005	28.33	10.30	-30.06	-	-	0.67	1.00

Table 2-180 PESS loading for LE lower skin panel 21050 (summary from PESS).

Panel 21050 Buckling Results (critical LC3002)

PANEL ID [-]	LC ID [-]	Analysis type [-]	Load level [-]	RF [-]
21050	3002	Shear	100% UL	11.26
21050	3002	Comp	100% UL	18.59
21050	3002	Bending	100% UL	NA
21050	3002	Shear + Comp	100% UL	8.36
21050	3002	Shear + Bending	100% UL	NA
21050	3002	Comp + Bending	100% UL	NA
21050	3002	Shear + Comp + Bending	100% UL	NA

Table 2-181 PESS RF for LE lower skin panel/bay 5, critical LC3002 (summary from PESS)

Critical buckling is shear + compression interaction.

2.5.12.3.5 Lower Skin Joint to Front Spar

The LE lower skins are joined to the front spar via a single row of blind fasteners, the joint arrangement is shown in Figure 2-100.

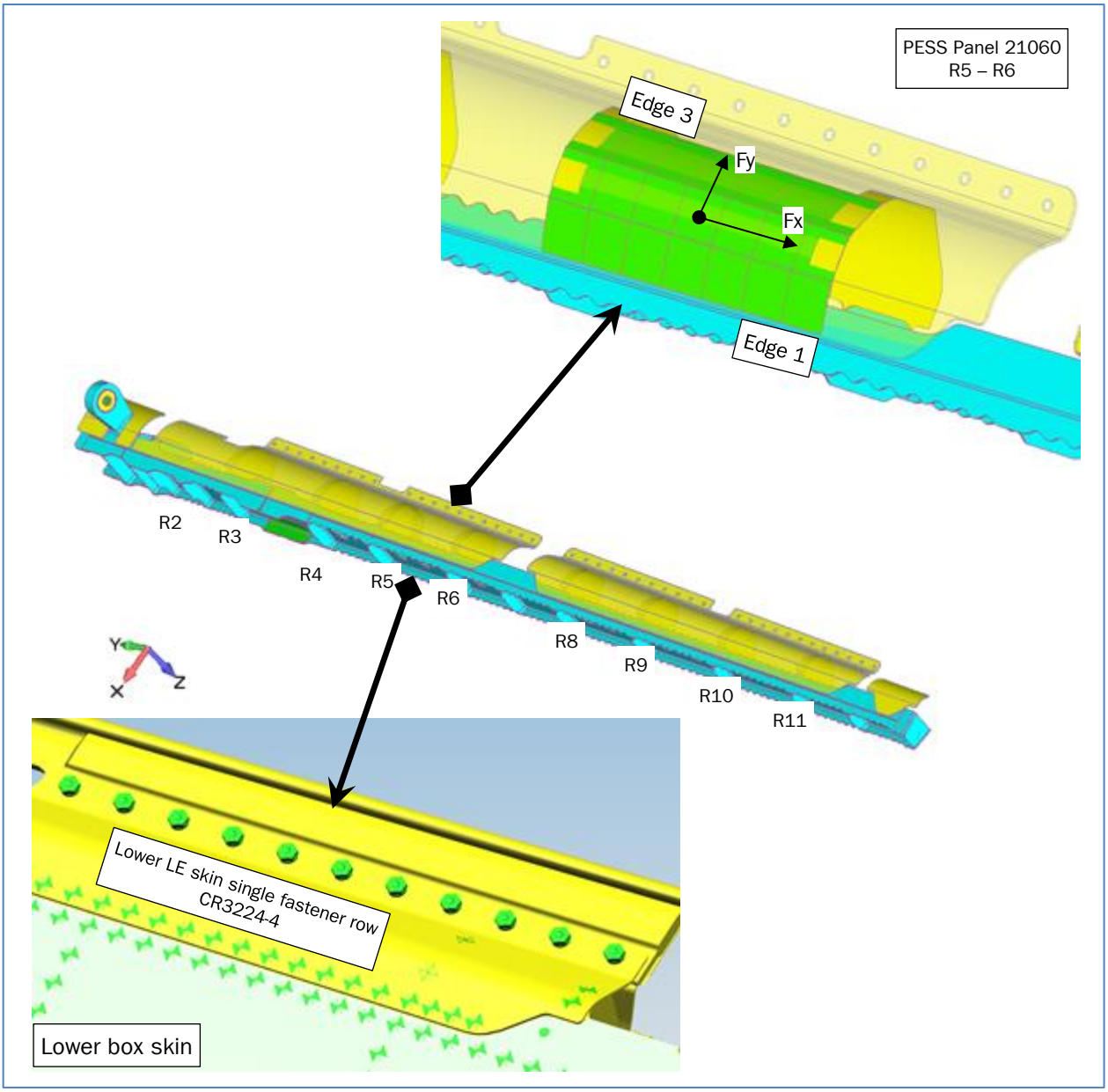

Figure 2-100 LE upper skin to front spar joint.

The approach taken is to use bay average loading

Joint Geometry and Allowables

Joint details used by calculation file [9] are given in appendix G. See under sub-heading Front Spar to LE lower skin joint. Table 2-192 summarizes joint details and allowables.

LE Rib	PANEL ID [-]	Fastener Details				Shear Allow	Skin Bearing Allowable			Spar Bearing Allowable			Mode
		Type	Dash No.	Dia	No	/Fastener	tskin	Mat_{skin}	/Fastener	tspar	Mat_{spar}	/Fastener	
				mm		N.	mm		N.	mm		N.	
1	21010	CR3224	4	3.2	2	2950	1.60	2024-T42	1515	3.00	2124-T851	2550	Bearing
2	21020	CR3224	4	3.2	2	2950	1.60	2024-T42	1515	1.60	2124-T851	1680	Bearing
3	21030	CR3224	4	3.2	10	2950	1.60	2024-T42	1515	1.70	2124-T851	1765	Bearing
4	21040	CR3224	4	3.2	11	2950	1.60	2024-T42	1515	1.20	2124-T851	1260	Bearing
5	21050	CR3224	4	3.2	8	2950	1.60	2024-T42	1515	1.10	2124-T851	1148	Bearing
6	21060	CR3224	4	3.2	9	2950	1.60	2024-T42	1515	1.00	2124-T851	1035	Bearing
7	21070	CR3224	4	3.2	4	2950	1.60	2024-T42	1515	1.20	2124-T851	1260	Bearing
8	21080	CR3224	4	3.2	4	2950	1.60	2024-T42	1515	1.20	2124-T851	1260	Bearing
9	21090	CR3224	4	3.2	10	2950	1.60	2024-T42	1515	1.00	2124-T851	1035	Bearing
10	21100	CR3224	4	3.2	10	2950	1.60	2024-T42	1515	1.00	2124-T851	1035	Bearing
11	21110	CR3224	4	3.2	10	2950	1.60	2024-T42	1515	1.00	2124-T851	1035	Bearing
12	21120	CR3224	4	3.2	5	2950	1.60	2024-T42	1515	1.00	2124-T851	1035	Bearing
13	21130	CR3224	4	3.2	4	2950	1.60	2024-T42	1515	1.00	2124-T851	1035	Bearing

Table 2-182 LE Lower skin to front spar joint details.

Load Extraction

A set of PESS panel groups have been created to represent the upper LE skin. From these groups a set of intermediate PESS loading files have been generated using the PESS FE data module.

- PESS FE data module *Recovery Method: FBD+SC*

The joint lies along edge 3 of the PESS panel see Figure 2-100. Loading for this edge is used to determine joint fastener loads. Calculation file [9] extracts “raw” PESS data from the intermediary load files [217] to [219] and generates a table with joint/load case specific content. An example for the critical case is given in Table 2-183.

Active LC: 5005 Ultimate Loads			PESS Edge 3 Loading					LE Lower Skin to Front Spar Joint		
			Total on Joint Edge		Fastener Loading			Fastener allow	RF	Failure Mode
LE Bay	PANEL ID [-]	Span "a" mm	Fx	Fy	Px	Py	Pres			
			N					N.		
1	21010								N/A	
2	21020								N/A	
3	21030								N/A	
4	21040	200.0	-4589.6	-62.7	-417.2	-5.7	417.3	1260.0	3.01	Bearing
5	21050	134.0	-3392.8	102.0	-424.1	12.8	424.3	1147.5	2.70	Bearing
6	21060	181.0	-5267.9	317.2	-585.3	35.2	586.4	1035.0	1.76	Bearing
7	21070	100.0	-2945.4	607.9	-736.3	152.0	751.9	1260.0	1.67	Bearing
8	21080	100.0	-400.7	-96.5	-100.2	-24.1	103.0	1260.0	12.22	Bearing
9	21090	175.0	-686.2	103.9	-68.6	10.4	69.4	1035.0	14.91	Bearing
10	21100	183.0	-1154.9	25.0	-115.5	2.5	115.5	1035.0	8.95	Bearing
11	21110	180.0	-1458.7	19.4	-145.9	1.9	145.9	1035.0	7.09	Bearing
12	21120	104.0	-592.4	367.7	-118.5	73.5	139.5	1035.0	7.42	Bearing
13	21130								N/A	

Table 2-183 LE lower skin to front spar joint, applied & fastener loads.

Summary of Reserve Factors: LE lower Skin to Front Spar Joint

The analysis for this joint can be found in calculation file [9], sheet: *L Skin Analysis*. The RF summary from this file is presented in Table 2-184.

LE Bay	PANEL ID	Reserve Factor vs Load Case Id										
	[-]	2001	3002	3003	3051	3052	3053	3054	3055	3056	4004	5005
4	21040	7.92	3.22	5.02	34.27	34.27	34.94	34.94	16.94	16.94	3.12	3.01
5	21050	7.58	2.80	4.72	59.51	59.51	135.31	135.31	23.12	23.12	2.78	2.70
6	21060	5.78	1.76	3.26	49.75	49.75	134.91	134.91	5.78	5.78	1.81	1.76
7	21070	5.77	1.74	2.79	9.56	9.56	38.92	38.92	4.67	4.67	1.79	1.67
8	21080	11.52	25.95	26.18	11.22	11.22	43.42	43.42	7.65	7.65	15.23	12.22
9	21090	13.64	18.64	23.22	418.31	418.31	115.79	115.79	9.84	9.84	13.68	14.91
10	21100	12.67	9.75	18.78	45.31	45.31	245.61	245.61	20.71	20.71	8.81	8.95
11	21110	13.66	6.86	21.98	46.19	46.19	157.83	157.83	45.17	45.17	7.05	7.09
12	21120	18.92	7.41	24.92	25.50	25.50	406.02	406.02	18.29	18.29	8.17	7.42

Table 2-184 LE lower skin to front spar joint RF summary.

Critical Load case	5005
Critical LE Bay	7, PESS rib Panel Id. 21070
Joint Failure Mode	Fastener bearing.

Critical RF = 1.67

Expanded details for critical LC 5005, Bay 7 / Panel Id. 21070

Bays 1 to 3 & 13 are considered as non-structural.

Worked Example: LE lower skin to front spar joint, Bay 7, LC5005

From Table 2-183

Joint load for bay 7 / LC5005 Fx = -2945.4 N.
Fy = 607.9 N.

An average fastener load for the bay is calculated from dividing the applied load by the number of fasteners.

Bay 7 has 4 span wise fasteners in a single row (Table 2-182).

Fastener load	Px	= Fx / No. of fasteners	= 2945.4/4	= 736.3 N.
	Py	= Fy / No. of fasteners	= 607.9/4	= 152.0 N.
	Pres	$= (Px^2+Py^2)^{0.5}$	$= (736.3^2+152.^2)^{0.5}$	= 751.9 N.

From Table 2-182, fastener details and allowables are:

The fastener type is	CR3224-4	P'rod solid rivet	
Dia.	= 3.2 mm		
Fastener shear	= 2950. N.		
Bearing in rib web	= 1515. N.	2024 T42	t_{web}= 1.6 mm
Bearing in F. spar	= 1260. N.	2185 T851	t_{skin}= 1.2 mm
Minimum allowable	= 1260. N.	Bearing critical	

RF = Fastener allow / fastener applied = 1260./751.9 **RF = 1.67**

2.5.12.4 Leading Edge Ribs

The primary purpose of the leading edge assembly is to support the balance masses and provide an aero dynamic profile. As part of this assembly the aileron leading edge (LE) ribs support and divide the upper and lower LE skins. The LE ribs have no direct attachments with the balance masses. The mid and outboard hinges also act as ribs at their respective positions along the front spar.
A single type of LE rib is utilized; machined from 2124 T851 aluminium plate.

The arrangement of the LE ribs is shown in Figure 2-101.
The following strength and buckling checks are made:

- Web Strength under biaxial loading (FEMAP post processing)
- Stress around (un-flanged) web lightening holes. (PESS)
- Web buckling. (PESS)
- Flange loads due post-buckling of upper and lower skins (PSM 5.3)
- Local buckling and crippling of upper and lower flanges. (PESS)
- Inter-rivet buckling of rib to skin joints. (PESS)
- Strength of attachments to upper and lower skins (PESS loading)

Extensive use of PESS has been made for load extraction and analysis. For this part of the analysis only summaries of input data, loading and RF's are provided. Where PSM based analysis has been used, critical cases are illustrated by worked examples.

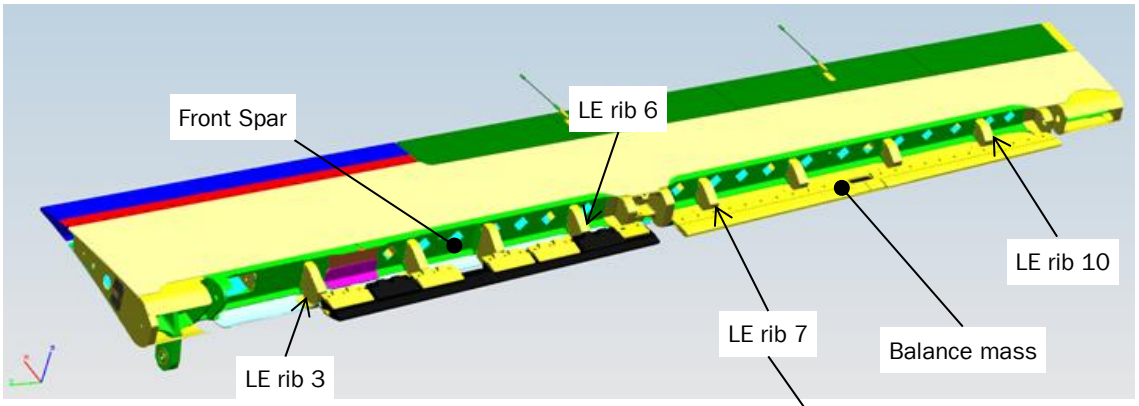

Rib to skin joints
Outboard ribs: 2* CR3224-5 blind rivets
Inboard ribs: 3* CR3224-5 blind rivets

Rib to front spar joints
Outboard ribs: 2* MS20470AD-4 solid rivets
Inboard ribs: 3* MS20470AD-4 solid rivets

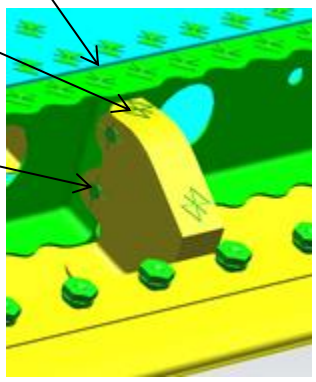

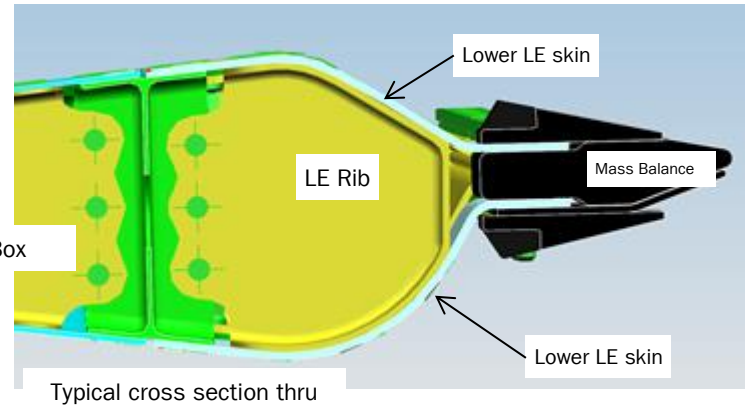

Typical cross section thru leading edge assembly

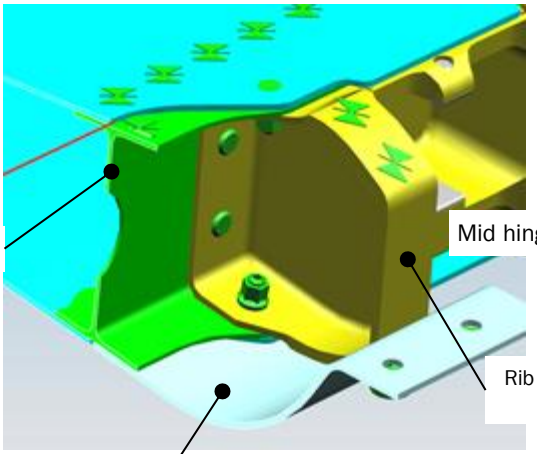

Figure 2-101 Assembly of LE ribs with front spar.

2.5.12.4.1 Rib Static Strength

Static strength is check using FEM element results. The LE is represented in two (dissimilar) FEM's. A coarse grid mesh of the LE is included in the general purpose aileron FEMs [3] to [6] and a fine mesh representation in a LE standalone model FEM [10], see Figure 2-102.
Stress data is extracted/condensed from both types of FEM results via FEMAP data tables.

FEMAP menu sequence: *List – Output – Summary to Data Table*

The summary method used identifies elements with the max/min centre stress values for each of the load cases given in Table 2-183.
The "raw data tables" are then written to calculation file 9, worksheet: *FEMAP Ribs*. From the "raw data" sheet the following RF summary tables are constructed.

- RF, Tension strength: Ultimate maximum principal stress vs Ftu allowable.
- RF, Compression strength: Ultimate minimum principal stress vs Fcy allowable.

In addition to the above, panel buckling checks are performed in the section 2.5.12.4.2.

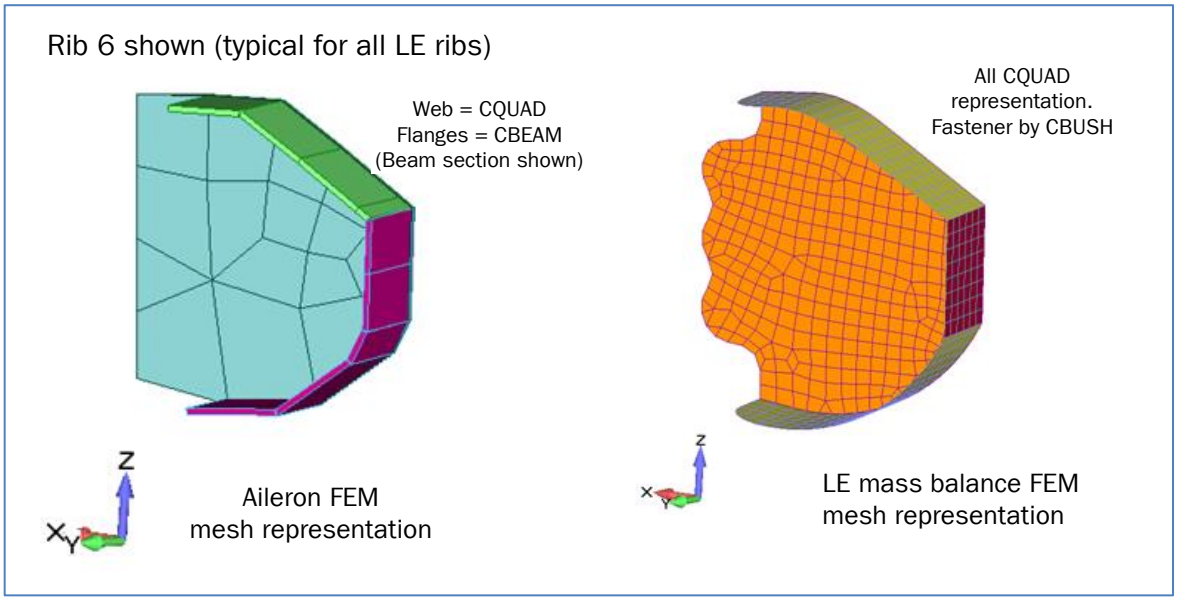

Figure 2-102 Comparison of rib mesh, aileron FEM [3 to 6] and LE balance assy FEM [10]

Static Strength: LE Ribs Web Stress
Element centre data
Failure criteria ultimate max/min principal stress vs ultimate allowable

	Maximum Principal Stress							Minimum Principal Stress						
Load Case	Element Top Surface		Element Bot Surface		Allowable		RF	Element Top Surface		Element Bot Surface		Allowable		RF
	Element Id.	Value MPa	Element Id.	Value MPa	Criteria	Value MPa		Element Id.	Value MPa	Element Id.	Value MPa	Criteria	Value MPa	
2001	2710550	14.1	2710550	15.0			31.17	2710553	-15.0	2710553	-15.1			27.90
3002	2710553	29.1	2710553	30.5			15.39	2710550	-27.5	2710550	-30.9			13.64
3003	2710550	19.8	2710550	21.6			21.69	2710553	-21.5	2710553	-22.5			18.67
3054	2710585	6.5	2710585	6.3	Ftu	469.0	72.69	2710567	-4.6	2710567	-4.1	Fcy	421.0	92.31
3055	2710583	39.1	2710583	51.3			9.14	2710611	-26.6	2710581	-29.6			14.19
4004	2710553	30.7	2710553	32.1			14.59	2710550	-28.9	2710550	-32.3			13.03
5005	2710553	32.1	2710553	33.7			13.93	2710550	-30.0	2710550	-33.5			12.55

Table 2-185 LE rib web, "aileron" FEM [3] to [6], biaxial strength.

	Maximum Principal Stress							Minimum Principal Stress						
Load Case	Element Top Surface		Element Bot Surface		Allowable		RF	Element Top Surface		Element Bot Surface		Allowable		RF
	Element Id.	Value MPa	Element Id.	Value MPa	Criteria	Value MPa		Element Id.	Value MPa	Element Id.	Value MPa	Criteria	Value MPa	
3051	4357	33.6	4357	32.1			13.96	5395	-21.4	5248	-15.6			19.68
3052	5395	21.4	5248	15.6			21.93	4357	-33.6	4357	-32.1			12.53
3053	3382	11.8	3382	11.9	Ftu	469.0	39.37	7348	-6.8	7348	-6.6	Fcy	421.0	62.04
3054	7348	6.8	7348	6.6			69.12	3382	-11.8	3382	-11.9			35.34
3055	3400	151.6	3400	142.4			3.09	3382	-186.2	3382	-184.4			2.26
3056	3382	186.2	3382	184.4			2.51	3400	-151.6	3400	-142.4			2.77

Table 2-186 LE rib web, "fine mesh" mass balance FEM [10], biaxial strength

Critical tension load case	3056	Inertia case	
Critical ult. applied stress	Major principal	186.2MPa	
Allowable stress	Ftu	469.0 MPa	2124-T851, B basis
RF = allow/applied	469./186.2 = 2.51		**RF = >2.00**

Critical compression load case	3055	Inertia case	
Critical LE rib	Rib 3		
Critical ult. applied stress	Minor principal	-186.2 MPa	
Allowable stress	Fcy	421.0 MPa	2124-T851, B basis
RF = allow/applied	421./186.2 = 2.26		**RF = >2.00**

Static Strength: LE Ribs Flanges, LE balance mass Fem [10]

Rib flanges are curved and hence the previously used simple tension/compression allowables have to be corrected[42]. Correction for flange curvature effects (tension & compression) is based on an efficiency factor (η_{cv}) from PSM 5.3.8.7 and is applied to the allowables.
Conservatively a single tension and a single compression allowable will be determined and applied to all ribs.

Tension allowable $= F_{tu} * \eta_{cv}$
Compression allowable $= F_{lb,flg} * \eta_{cv}$

where $F_{lb,flg}$ = Local flange buckling from PSM 5.3.4.2

The flange curvature efficiency factor method described in PSM 5.3.87 assumes a simple "I" or "C" section beam, free of attachment to skins. When a skin is attached to the flange under consideration, it restrains the flange from taking the assumed deformation see Figure 2-103. To account for the benefit from skin restraint the following has been used:

- Assume a symmetrical I section
- Assume the flange thickness $t = t_{flg} + t_{skin}$

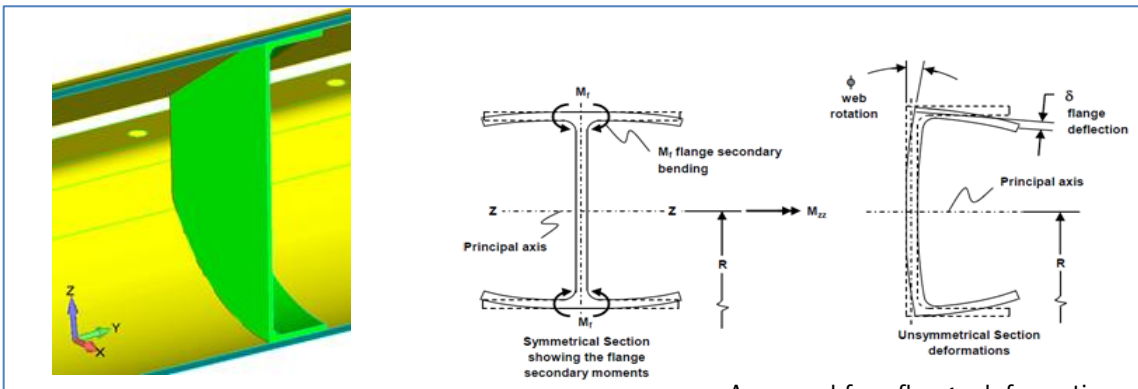

Assumed free flange deformation
(From PSM 5.3.8.7 Fig 5.3.8.7-6)

Actual flange deformation restrained by skin.
Skin curvature increases resistance to Mr bending

Figure 2-103 Flange deformation due to beam curvature

Following from above, curvature efficiency factors and local flange buckling are shown in a tabular (Table 2-187) manner below.

Rib	Geometry						Curved flange		Local Buckling		
	R	b	b_{flg}	t_{web}	t_{skin}	t_{flg}	$\frac{b_f^2}{t_f R_f}$	η_{cv}	$F_{lb,flg}$	$F_{lb,flg}*\eta_{cv}$	Cut off
	mm								MPa		
Rib 3	45	17	16.5	1.0	1.6	1.5	2.0	0.516	366.7	189.1	375.2
Rib 4	43	17	16.5	1.0	1.6	1.4	2.1	0.499	319.4	159.5	375.2
Rib 5	42	17	16.5	1.0	1.6	1.3	2.3	0.483	275.4	132.9	375.2
Rib 6	40	17	16.5	1.0	1.6	1.4	2.3	0.481	319.4	153.6	375.2
Rib 8	39	17	16.5	1.0	1.6	1.4	2.3	0.475	319.4	151.7	375.2
Rib 9	36	17	16.5	1.0	1.6	1.4	2.5	0.457	319.4	145.9	375.2
Rib 10	33	17	16.5	1.0	1.6	1.4	2.8	0.438	319.4	139.8	375.2
Rib 11	30	17	16.5	1.0	1.6	1.4	3.0	0.418	319.4	133.6	375.2

Table 2-187 LE rib flange strength corrections for curvature.

[42] Flange bending due to curvature is a secondary effect, not captures by a simple static FE analysis.

Inspection of Table 2-187, shows:

- Critical efficiency factor = 0.418
  Occurs for rib 11, this is used for all tension allowables.
- Critical corrected flange buckling allowable = 132.9 MPa
  Occurs for rib 5, this is used for all compression allowables

Applied stress values (envelope of all ribs) for the rib (CQUAD) flanges are extracted in the manner described at the beginning of the section and combined with the above allowables in Table 2-188.

	Maximum Principal Stress							Minimum Principal Stress						
Load Case	Element Top Surface		Element Bot Surface		Allowable		RF	Element Top Surface		Element Bot Surface		Allowable		RF
	Element Id.	Value MPa	Element Id.	Value MPa	Criteria	Value MPa		Element Id.	Value MPa	Element Id.	Value MPa	Criteria	Value MPa	
3051	7560	23.6	4592	24.7	$F_{tu}*\eta_{cv}$	196.2	7.93	4585	-19.1	4628	-27.4	$F_{lb,flg}*\eta_{cv}$	132.9	4.84
3052	4585	19.1	4628	27.4			7.15	7560	-23.6	4592	-24.7			5.37
3053	3653	5.9	3523	9.0			21.88	3503	-7.0	3689	-8.5			15.58
3054	3503	7.0	3689	8.5			23.00	3653	-5.9	3523	-9.0			14.82
3055	4451	87.6	5578	86.2			2.24	5614	-86.1	4469	-98.6			1.34
3056	5614	86.1	4469	98.6			1.99	4451	-87.6	5578	-86.2			1.51

Table 2-188 LE rib flanges, "fine mesh" mass balance FEM, static strength

Critical tension load case	3056	Inertia case	
Critical ult. applied stress	Major principal	98.6MPa	
Allowable stress	$Ftu*\eta_{cv}$	196.2 MPa	2124-T851, B basis
RF = allow/applied	196.2/98.6 =		**RF = 1.99**

Critical compression load case	3055	Inertia case	
Critical ult. applied stress	Minor principal	98.6 MPa	
Allowable stress	$F_{local\ buckling,flg}*\eta cv$	132.9 MPa	2124-T851, B basis
RF = allow/applied	132.9/98.6 =		**RF = 1.34**

2.5.12.4.2 LE Rib Web Buckling

The following buckling policy for the rib webs is implemented:

- No buckling below ultimate load. (section 2.5.2)
- All edges are assumed to have simple supports.

The rib webs are of a trapezoid form. For the purposes of web buckling analysis, an equivalent flat rectangular shape is assumed. Web a & b dimensions cannot automatically be taken from the equivalent FE PESS group; data has been manually entered. All relevant LE rib geometry can be found in Appendix G, Table 6-21. A geometry overview pertinent to buckling is also given in this section. A typical web idealisation is shown in Figure 2-104.

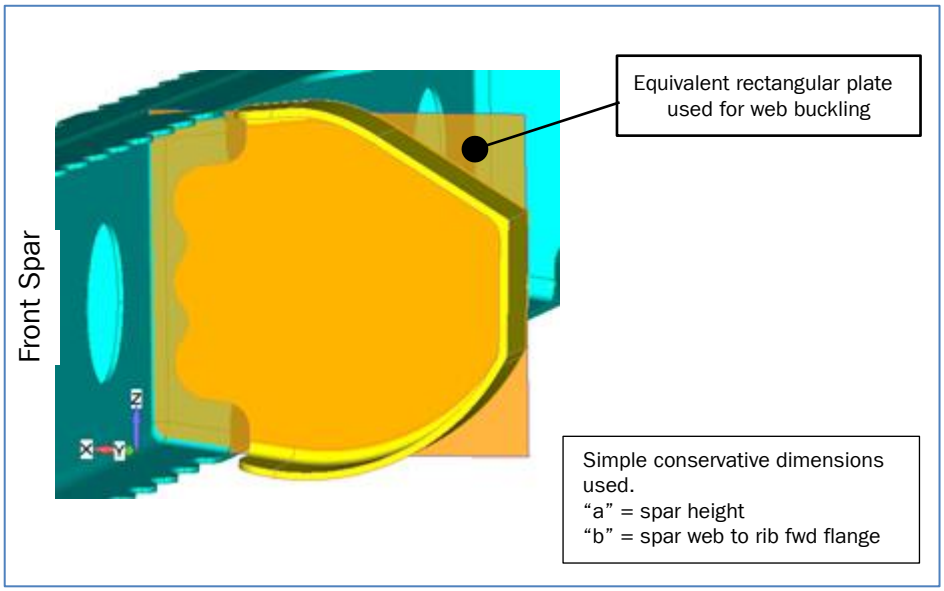

Figure 2-104 Typical web buckling idealisation (Rib 6 shown)

Buckling and analysis is performed using PESS panel analysis module. As PESS is an approved software tool no detailed worked example will be provided, only summaries.

<u>Summary of Web Panel Geoemetry</u>

Rib	PANEL ID [-]	Panel Name [-]	Type [-]	Mat [-]	Edge Constraint [-]	Basic geometry a [mm]	b [mm]	t [mm]	r [mm]
Rib 1	31010	Rib_LE_PANEL_31010	Flat	1	SSSS	75.00	81.00	0.80	-
Rib 3	31030	Rib_LE_PANEL_31030	Flat	1	SSSS	69.00	71.00	1.00	-
Rib 4	31040	Rib_LE_PANEL_31040	Flat	1	SSSS	69.00	74.00	1.00	-
Rib 5	31050	Rib_LE_PANEL_31050	Flat	1	SSSS	63.00	69.00	1.00	-
Rib 6	31060	Rib_LE_PANEL_31060	Flat	1	SSSS	59.00	66.00	1.00	-
Rib 8	31080	Rib_LE_PANEL_31080	Flat	1	SSSS	56.00	65.00	1.00	-
Rib 9	31090	Rib_LE_PANEL_31090	Flat	1	SSSS	53.00	65.00	1.00	-
Rib 10	31100	Rib_LE_PANEL_31100	Flat	1	SSSS	50.00	59.00	1.00	-
Rib 11	31110	Rib_LE_PANEL_31110	Flat	1	SSSS	47.00	57.00	1.00	-
Rib 13	31130	Rib_LE_PANEL_31130	Flat	1	SSSS	44.00	33.00	0.80	-

Material List	
1	AA2124 ¦ P ¦ T851 ¦ 25.40-38.10 ¦ B ¦ T=20

Table 2-189 LE rib web buckling geometry (summary from PESS).

Summary of Web Panel Buckling Coeffients

Rib	PANEL ID [-]	Standard allowables Ks [-]	Fscr [MPa]	Kc [-]	Fccr [MPa]	Kb [-]	Fbcr [MPa]	Pb [MPa]
Rib 1	31010	7.9	68.92	4.08	27.64	25.54	172.90	87.10
Rib 3	31030	8.23	132.74	4.06	55.88	26.13	355.59	142.19
Rib 4	31040	7.93	127.98	4.08	51.70	25.63	324.69	137.84
Rib 5	31050	7.80	150.84	4.10	59.72	25.35	361.70	158.59
Rib 6	31060	7.66	168.99	4.12	65.63	25.08	374.00	174.90
Rib 8	31080	7.45	181.52	4.16	68.34	24.73	375.78	185.98
Rib 9	31090	7.16	190.98	4.23	69.51	24.30	373.87	194.31
Rib 10	31100	7.36	202.14	4.18	83.38	24.60	388.74	204.16
Rib 11	31110	7.21	207.69	4.22	90.08	24.38	391.39	209.10
Rib 13	31130	6.78	215.10	4.36	177.92	23.73	407.83	215.89

Table 2-190 LE Rib web panel buckling allowables (summary from PESS).

Buckling RF Summary, All Panels/Load Cases

The buckling criteria for the LE web panels is no buckling < ultimate load.
This is indicated by a RF >1.0.

Rib	PANEL ID [-]	LC ID [-]	Analysis type [-]	Load level [-]	RF [-]	Failure Mode	Buckling Criteria
Rib 1	31010	3002	Shear + Comp	100% UL	9.64	UL Buckling	PASS
Rib 3	31030	3002	Shear + Comp	100% UL	5.10	UL Buckling	PASS
Rib 4	31040	3002	Shear + Comp	100% UL	22.69	UL Buckling	PASS
Rib 5	31050	3003	Shear + Comp	100% UL	196.07	UL Buckling	PASS
Rib 6	31060	3002	Shear + Comp	100% UL	18.42	UL Buckling	PASS
Rib 8	31080	3003	Shear + Comp	100% UL	92.64	UL Buckling	PASS
Rib 9	31090	3002	Shear + Comp	100% UL	157.41	UL Buckling	PASS
Rib 10	31100	3002	Shear + Comp	100% UL	702.71	UL Buckling	PASS
Rib 11	31110	3002	Shear + Comp	100% UL	17.76	UL Buckling	PASS
Rib 13	31130	3002	Shear + Comp	100% UL	606.36	UL Buckling	PASS

Table 2-191 LE Rib web buckling, critical RF's.

Web buckling

Critical load case: 3002
Critical web panel: Rib 3 PESS panel 31030
Critical RF = 5.10

RF = >2.00
(no buckling below ultimate)

2.5.12.4.3 Rib Joint to Front Spar

The LE ribs are joined to the front spar via 2 or 3 solid rivets, the joint arrangement is shown in Figure 2-105.

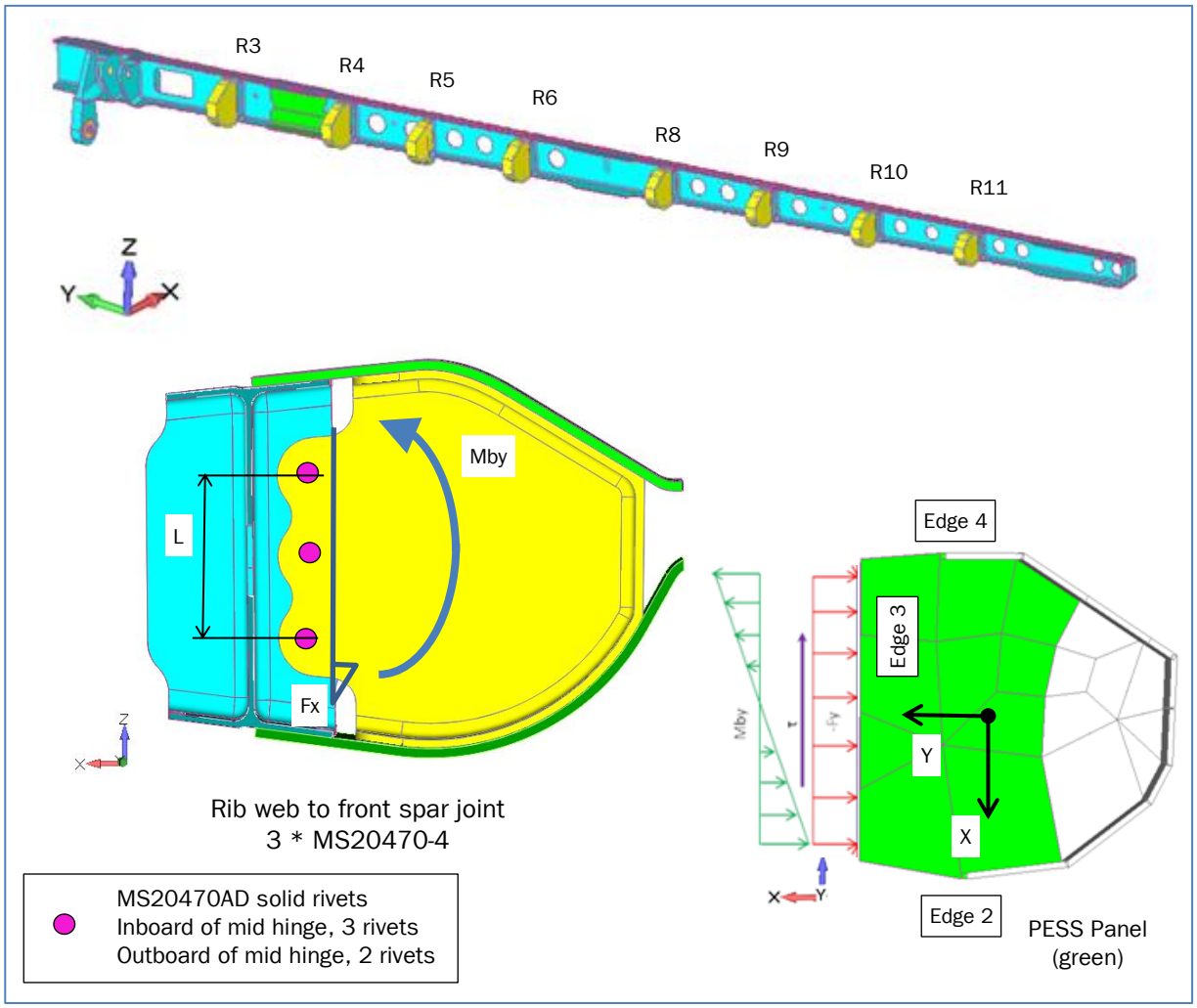

R3

Figure 2-105 LE Rib to front spar joint. (Rib 6 shown, typical for all others)

Geometry and Allowables

Joint details used by calculation file [9] are given in Appendix G, Table 6-21. See under heading *LE Rib to front spar vertical stiffener*.

Table 2-192 summarizes joint details and allowables.

LE Rib	PANEL ID [-]	Fastener Details				Shear Allow	Rib Bearing Allowable			Spar Bearing Allowable			Mode
		Type	Dash No.	Dia	No	/Fastener	tskin	Matrib	/Fastener	tspar	Mat_{spar}	/Fastener	
				mm		N.	mm		N.	mm		N.	
3	31030	MS20470AD	4	3.2	3	1730	1.00	2124-T851	1700	1.00	2124-T851	1700	Bearing
4	31040	MS20470AD	4	3.2	3	1730	1.00	2124-T851	1700	1.00	2124-T851	1700	Bearing
5	31050	MS20470AD	4	3.2	3	1730	1.00	2124-T851	1700	1.00	2124-T851	1700	Bearing
6	31060	MS20470AD	4	3.2	3	1730	1.00	2124-T851	1700	1.00	2124-T851	1700	Bearing
8	31080	MS20470AD	4	3.2	2	1730	1.00	2124-T851	1700	1.00	2124-T851	1700	Bearing
9	31090	MS20470AD	4	3.2	2	1730	1.00	2124-T851	1700	1.00	2124-T851	1700	Bearing
10	31100	MS20470AD	4	3.2	2	1730	1.00	2124-T851	1700	1.00	2124-T851	1700	Bearing
11	31110	MS20470AD	4	3.2	2	1730	1.00	2124-T851	1700	1.00	2124-T851	1700	Bearing

Table 2-192 LE Rib to front spar joint details.

Load Extraction

A set of PESS panel groups have been created to represent the rib webs. From these groups a set of intermediate PESS loading files have been generated using the PESS FE data module.

- PESS FE data module *Recovery Method:* *FBD+SC*

The joint lies along edge 3 of the PESS panel see Figure 2-105. Loading for this edge is used to determine joint fastener loads. Calculation file [9] extracts "raw" PESS data from the intermediary load files [217] to [220] and generates a table with joint/load case specific content. An example of the critical case is presented in Table 2-193.

Active Load Case: 5005 Ultimate Loads											Rib to Front Spar	
LE Rib	PANEL ID [-]	L	Loading from PESS Edge 3			Fastener Loading				Fastener Pallow	RF	Failure Mode
			Fx	Fy	Mby	Px	Py	$Py_{(Mby)}$	Pres			
		mm	N.			N.				N.		
3	31030	35.7	-1515.9	-189.5	-21859	-505.3	-63.2	-612.3	843.5	1700.0	1.75	Bearing
4	31040	32.3	-410.2	-77.0	-4304	-136.7	-25.7	-133.2	209.6	1700.0	7.05	Bearing
5	31050	30	8.3	-31.0	1218	2.8	-10.3	40.6	51.0	1700.0	28.98	Bearing
6	31060	27.5	-396.8	88.5	-1677	-132.3	29.5	-61.0	160.3	1700.0	9.22	Bearing
8	31080	22.8	-149.9	43.6	-3031	-75.0	21.8	-132.9	171.9	1700.0	8.59	Bearing
9	31090	19.8	112.8	-13.1	-243	56.4	-6.6	-12.3	59.5	1700.0	24.85	Bearing
10	31100	16.7	97.8	-52.5	729	48.9	-26.2	43.6	85.3	1700.0	17.33	Bearing
11	31110	17.2	-230.0	-25.4	2556	-115.0	-12.7	148.6	198.1	1700.0	7.46	Bearing

Table 2-193 LE Rib to front spar joint, applied loads, fastener loads and RF (LC5005)

Summary of Reserve Factors: LE Rib to Front Spar Joint

A summary of joint RF's for all panel and applicable load cases (Table 2-159) is presented below.

LE Rib	PANEL ID [-]	LE Rib to Front Spar Joint Reserve Factor vs Load Case Id										
		2001	3002	3003	3051	3052	3053	3054	3055	3056	4004	5005
3	31030	3.77	1.88	2.76	30.10	30.10	156.42	156.42	2.43	2.43	1.81	1.75
4	31040	25.94	6.56	19.43	49.31	49.31	38.50	38.50	5.56	5.56	7.65	7.05
5	31050	129.24	15.58	40.27	41.74	41.74	148.98	148.98	6.32	6.32	17.18	28.98
6	31060	31.07	14.56	18.28	43.27	43.27	24.98	24.98	8.16	8.16	13.64	9.22
8	31080	39.44	13.43	18.46	11.70	11.70	84.48	84.48	21.23	21.23	14.05	8.59
9	31090	54.65	17.40	54.32	53.54	53.54	63.85	63.85	15.31	15.31	22.97	24.85
10	31100	42.24	11.96	159.11	137.70	137.70	348.45	348.45	13.52	13.52	13.80	17.33
11	31110	14.64	7.12	26.47	70.91	70.91	103.08	103.08	8.75	8.75	7.35	7.46

Table 2-194 LE Rib to front spar joint RF summary.

Critical Load case	5005
Critical LE Rib	Rib 3, PESS rib Panel Id. 31030
Joint Failure Mode	Fastener bearing.

Critical RF = 1.75

RF includes a 1.15 fitting factor

Worked Example: LE Rib to front spar joint: Rib 3, LC5005
From Table 2-193.

Joint applied load for rib 3 / LC5005	Fx =	-1515.9 N.
	Fy =	-189.5 N.
	Mby =	-21859. N. mm

Fastener loads are calculated by a simple classic bolt group approach.
At LE rib 3, three fasteners are used (centre fastener is assumed at the midpoint)

Distance between extreme fasteners L = 35.7 mm

Fastener load	Px = Fx / No. of fasteners	1515.9/3	= 505.3 N.
	Py = Fy / No. of fasteners	189.5/3	= 63.2 N.
	$Py_{(Mby)}$ = Mby / L	21859/35.7	= 612.3 N.

Fastener resultant is given by

$$(Px^2+(Py+ Py_{(Mby)})^2)^{0.5} = (505.3^2+(63.2.+ 612.3)^2)^{0.5} = 843.6 \text{ N.}$$

From Table 2-192, fastener details and allowables are:

The fastener type is	MS20470AD-4	P'rod solid rivet	
Dia.	= 3.2 mm		
Fastener shear	= 1730. N.		
Bearing in rib web	= 1700. N.	2124 T851	t_{web}= 1.0 mm
Bearing in F. spar	= 1700. N.	2185 T851	t_{skin}= 1.0 mm
Minimum allowable	= 1700. N.	Bearing critical	

RF = Fastener allow / fastener applied = 1700./(1.15*843.6) **RF = 1.75**
RF includes a 1.15 fitting factor

2.5.12.5 Mass Balances

The objective of the mass balance weights is to move the aileron CG forward of the hinge line. They form an integral part of the leading edge assembly (they provide a boundary support for the skin panels). The arrangement of mass balances is shown in Figure 2-106 and Figure 2-107.
The balance weights and joints with the LE skin are substantiated using a standalone detail FEM [10], a brief description is given in section 2.4.2.
The loading for the detail FEM [10] is inertia cases alone, other loads cases (ED + Aero) are covered using the aileron installation FEM's [3] to [6].

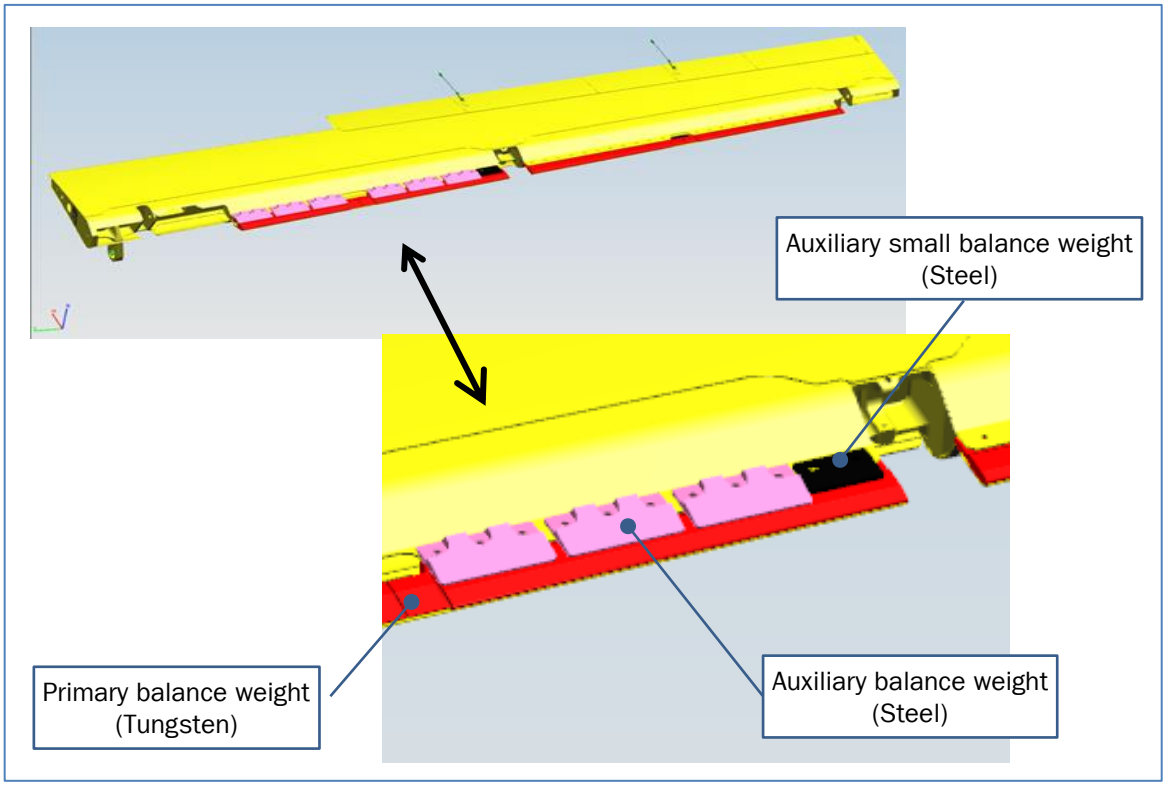

Figure 2-106 LE mass balance weights

2.5.12.5.1 Static Strength of Balance Masses

Static Strength: LE primary (tungsten) balance weights
Applied stress: Element centre data
Material: Tungsten, W93NICU for properties see Table 6-9
Failure criteria ultimate max/min principal stress vs ultimate allowable

	Maximum Principal Stress					Minimum Principal Stress				
Load Case	Solid Centre		Allowable		RF	Element Top Surface		Allowable		RF
	Element Id.	Value MPa	Criteria	Value MPa		Element Id.	Value MPa	Criteria	Value MPa	
3051	114186	3.9	Ftu	600.0	153.48	121626	-3.4	Ftu	600.0	177.94
3052	121626	3.4			177.94	114186	-3.9			153.48
3053	117983	4.5			134.56	117878	-5.6			107.30
3054	117878	5.6			107.30	117983	-4.5			134.56
3055	141000	23.6			25.39	141040	-26.3			22.82
3056	141040	26.3			22.82	141000	-23.6			25.39

Table 2-195 LE primary (tungsten) balance weights, static strength.

Not critical **RF = >2.0**

Static Strength: LE auxiliary (steel) balance weights
Applied stress: Element centre data
Material: Steel, AISI321 for properties see Table 6-8
Failure criteria ultimate max/min principal stress vs ultimate allowable

	Maximum Principal Stress					Minimum Principal Stress				
Load Case	Solid Centre		Allowable		RF	Element Top Surface		Allowable		RF
	Element Id.	Value MPa	Criteria	Value MPa		Element Id.	Value MPa	Criteria	Value MPa	
3051	219380	1.6	Fty	152.0	379.57	229026	-1.5	Fty	152.0	408.53
3052	229026	1.5			408.53	219380	-1.6			379.57
3053	215920	2.6			232.99	215415	-3.1			194.69
3054	215415	3.1			194.69	215920	-2.6			232.99
3055	224911	8.5			70.94	224807	-6.0			100.24
3056	224807	6.0			100.24	224911	-8.5			70.94

Table 2-196 LE auxiliary (steel) balance weights, static strength.

	Maximum Principal Stress					Minimum Principal Stress				
Load Case	Solid Centre		Allowable		RF	Element Top Surface		Allowable		RF
	Element Id.	Value MPa	Criteria	Value MPa		Element Id.	Value MPa	Criteria	Value MPa	
3051	232257	0.8	Fty	152.0	776.03	232265	-0.6	Fty	152.0	975.04
3052	232265	0.6			975.04	232257	-0.8			776.03
3053	232257	0.5			1223.87	234764	-0.5			1144.57
3054	234764	0.5			1144.57	232257	-0.5			1223.87
3055	234640	2.6			235.07	232257	-2.8			210.59
3056	232257	2.8			210.59	234640	-2.6			235.07

Table 2-197 LE small auxiliary (steel) balance weights, static strength.

Not critical **RF = >2.0**

For AISI321 Ftu/Fty is greater than 1.5.
To (conservatively) cover both limit and ultimate RF's. An ultimate allowable = Fty has been used.

2.5.12.5.2 Attachments to Upper and Lower Skins

The arrangement and idealization of the mass balance weight joints is shown in Figure 2-107. At attachment positions a single bolt connects the main & aux balance masses with the leading edge skins. Loading is extracted via two sets of CBUSH elements representing the upper and lower LE skins. The PBUSH translational and rotational stiffness has been set to “rigid” (1.0E9). Bolt loading considers translational forces alone. It is assumed that due to clamp up of the joint, bending components are critical at the skin kink – edge of mass balance see Figure 2-107. This effect can be seen in Figure 2-107. A summary of RF’s is presented in Table 2-201.
The following checks for the joint are presented

Attachment joint balance masses to LE upper and lower skins
Bending strength of LE upper and lower skin at hard point edge/ skin kink
see Figure 2-107.

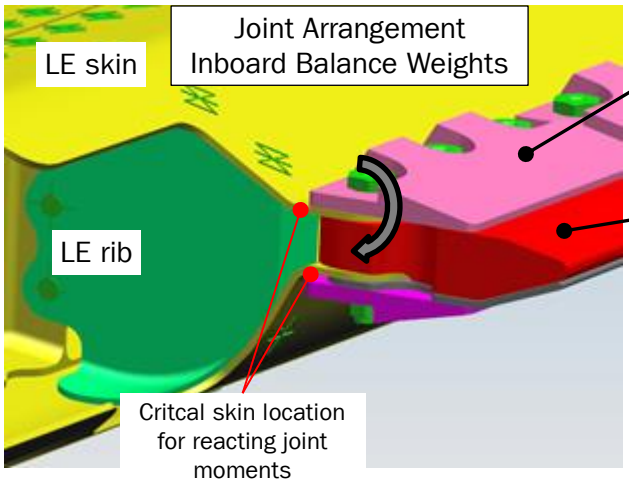

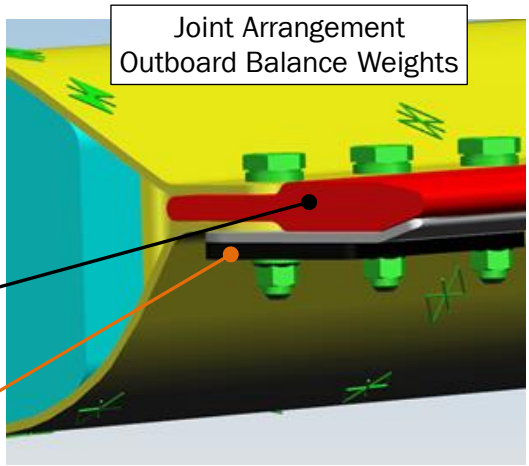

Bolts: NAS6603
Bolts: Steel 4340
Bolt dia.: 4.8 mm
Nut: MS21042L3
Nut: Reduced Hd.

FEM [10] Joint
Joint represented by three RBE2 elements.
Interconnect by two CBUSH
CBUSH stiffness = "rigid"

Joint Element & Grid Id's
Joint Node = 901 to 944

Upper skin RBE = 701 to 743
Upper skin CBUSH = 751 to 793 (joint forces)
Balance weights RBE = 901 to 943
Lower skin RBE = 801 to 843
Lower skin CBUSH = 801 to 843 (joint forces)

Bolt Mass element = 601 to 643

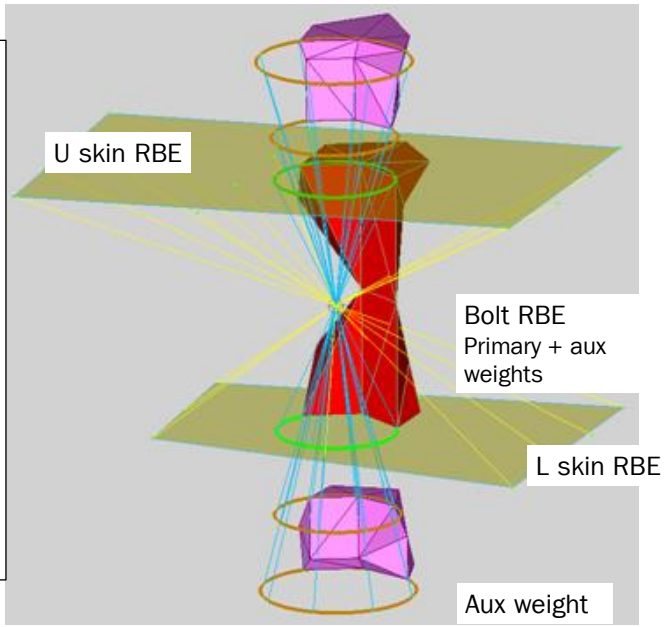

Figure 2-107 LE mass balance weights, joint to LE skins.

Joint Allowables

Fastener strength data has been taken from ref. [4]. For skin/flange thickness values which do not match standard sheet values, simple linear interpolation has been used. Joint fastener details and allowables are presented in Table 2-198.

Skin	Fastener Details		Shear Allow	Skin Bearing Allowable				Balance Weight Allowable			Mode
	Type	Dia	/Fastener	tskin	Mat_{skin}	Fbru	/Fastener	t	Mat	/Fastener	
		mm	N.	mm		MPa	N.	mm		N.	
Upper	NAS6603	4.8	11654	1.60	2024-T42	848	6513	Not critical part of joint			Bearing
Lower				1.60	2024-T42	848	6513	Not critical part of joint			Bearing

Table 2-198 LE mass balance joint, summary of fastener allowables.

Loading

The critical cases for the mass balance attachments are

Inertia, 36g +Z (up)
Inertia, 36g -Z (down)

Joint Loading for the Critical Load Case

Fastener loading has been extracted from FEM [9]. Each fastener is represented by a CBUSH (Figure 2-107). Element orientation is such that:

CBUSH X & Y forces are “shear”
CBUSH Z forces axial.

Joint loads are assumed to be transferred by fastener shear alone. This assumption is enforced in FEM [9] by using a PBUSH axial stiffness of the 10. N./ mm.

Joint loading and associated RF’s for the upper and lower skin critical cases are presented in Table 2-199 & Table 2-200.

Balance Mass	CBUSH Id	Joint Weights to Upper Skin				CBUSH Id	Joint Weights to Lower Skin			
		$P_{res(max)}$	Allow	RF	Mode		$P_{res(max)}$	Allow	RF	Mode
		N.					N.			
FWD Skin FWD Mass	751	180.4	6512.6	31.40	Bearing	851	175.5	6512.6	32.27	Bearing
	752	231.7	6512.6	24.44	Bearing	852	243.9	6512.6	23.22	Bearing
	753	181.3	6512.6	31.23	Bearing	853	221.0	6512.6	25.62	Bearing
	754	113.8	6512.6	49.77	Bearing	854	141.6	6512.6	39.99	Bearing
	755	102.0	6512.6	55.50	Bearing	855	110.7	6512.6	51.16	Bearing
	756	97.7	6512.6	57.99	Bearing	856	131.4	6512.6	43.10	Bearing
	757	177.1	6512.6	31.98	Bearing	857	200.9	6512.6	28.19	Bearing
	758	209.5	6512.6	27.03	Bearing	858	140.4	6512.6	40.34	Bearing
	759	195.8	6512.6	28.92	Bearing	859	223.4	6512.6	25.35	Bearing
FWD Skin AFT Mass	760	145.2	6512.6	39.02	Bearing	860	153.8	6512.6	36.81	Bearing
	761	190.2	6512.6	29.77	Bearing	861	135.8	6512.6	41.69	Bearing
	762	154.2	6512.6	36.73	Bearing	862	187.8	6512.6	30.16	Bearing
	763	99.7	6512.6	56.78	Bearing	863	92.9	6512.6	60.93	Bearing
	764	94.4	6512.6	60.02	Bearing	864	93.4	6512.6	60.62	Bearing
	765	86.2	6512.6	65.71	Bearing	865	120.9	6512.6	46.83	Bearing
	766	169.7	6512.6	33.38	Bearing	866	260.7	6512.6	21.72	Bearing
	767	112.7	6512.6	50.27	Bearing	867	155.0	6512.6	36.54	Bearing
	768	61.1	6512.6	92.71	Bearing	868	121.3	6512.6	46.70	Bearing
	769	113.2	6512.6	50.03	Bearing	869	128.0	6512.6	44.23	Bearing

Table 2-199 LE balance mass upper skin joint, fastener (CBUSH) loading and RF’s for inertia case 3055,

Balance Mass	CBUSH Id	Joint Weights to Upper Skin				CBUSH Id	Joint Weights to Lower Skin			
		$P_{res(max)}$	Allow	RF	Mode		$P_{res(max)}$	Allow	RF	Mode
		N.					N.			
AFT Skin FWD Mass	770	293.8	6512.6	19.28	Bearing	870	145.7	6512.6	38.86	Bearing
	771	143.2	6512.6	39.55	Bearing	871	60.6	6512.6	93.49	Bearing
	772	88.9	6512.6	63.70	Bearing	872	76.4	6512.6	74.17	Bearing
	773	69.0	6512.6	82.07	Bearing	873	64.8	6512.6	87.34	Bearing
	774	116.8	6512.6	48.47	Bearing	874	163.2	6512.6	34.70	Bearing
	775	86.9	6512.6	65.17	Bearing	875	125.8	6512.6	45.02	Bearing
	776	97.1	6512.6	58.33	Bearing	876	98.1	6512.6	57.73	Bearing
	777	59.6	6512.6	94.94	Bearing	877	57.4	6512.6	98.61	Bearing
	778	53.4	6512.6	105.99	Bearing	878	76.9	6512.6	73.60	Bearing
	779	68.5	6512.6	82.67	Bearing	879	53.9	6512.6	105.10	Bearing
	780	111.5	6512.6	50.77	Bearing	880	133.6	6512.6	42.40	Bearing
	781	95.4	6512.6	59.35	Bearing	881	140.1	6512.6	40.43	Bearing
	782	56.0	6512.6	101.14	Bearing	882	62.6	6512.6	90.49	Bearing
AFT Skin AFT Mass	783	34.2	6512.6	165.82	Bearing	883	34.6	6512.6	163.45	Bearing
	784	86.4	6512.6	65.52	Bearing	884	85.9	6512.6	65.93	Bearing
	785	62.5	6512.6	90.61	Bearing	885	96.4	6512.6	58.74	Bearing
	786	45.3	6512.6	125.11	Bearing	886	47.5	6512.6	119.12	Bearing
	787	45.1	6512.6	125.66	Bearing	887	40.1	6512.6	141.21	Bearing
	788	53.8	6512.6	105.18	Bearing	888	70.6	6512.6	80.25	Bearing
	789	45.2	6512.6	125.41	Bearing	889	74.3	6512.6	76.24	Bearing
	790	55.1	6512.6	102.84	Bearing	890	39.2	6512.6	144.56	Bearing
	791	30.3	6512.6	186.97	Bearing	891	54.8	6512.6	103.34	Bearing
	792	45.1	6512.6	125.63	Bearing	892	51.0	6512.6	110.96	Bearing
	793	86.2	6512.6	65.68	Bearing	893	64.3	6512.6	88.05	Bearing

Table 2-200 LE balance mass lower skin joint, fastener (CBUSH) loading and RF's or inertia case 3055

Location	Mass balance Joint Reserve Factors vs Load Case Id					
	Inertia					
	3051	3052	3053	3054	3055	3056
LE Upper skin	>2.00	>2.00	>2.00	>2.00	>2.00	>2.00
LE Lower Skin	>2.00	>2.00	>2.00	>2.00	>2.00	>2.00

Table 2-201 Summary of LE mass balance joint RF's.

Critical case = 3055, Inertia, 36g +Z (up/down).
From Table 2-200 Critical RF (19.28) is associated with CBUSH 770 (LE lower skin)

Fastener ultimate loads for CBUSH 770: Shear resultant force = 293.8 N.

Fastener details for the skin/flange from Table 2-198.

Fastener NAS6603, Dia. = 4.8 mm, Hex head.
Fastener shear allow = 11654. N.
Bearing in skin = 6513. N. (2024 T3, t = 1.6 mm)

Joint allow is minimum of shear and bearing = 6513. N. Bearing critical

RF = Allowable/(Fitting Factor*Applied)
= 6513/(1.15*293.8) = 19.27 **RF = >2.00**

Bending Strength of LE Skins at Hard Point Edge - Skin Kink.

As can be seen in Figure 2-10, a potential weak point in the design of the LE skins to mass balance joint is at the skin kink. Results from the FEM [10] will be used to justify this feature.
FEM [10] is a standalone model whose only loading is inertia loads from the balance masses
For wing bending and aero load cases see also section 2.5.12.2.3
Skin element ultimate stress levels are presented in Table 2-202 and Figure 2-108.

	Maximum Principal Stress							Minimum Principal Stress						
Load Case	Element Top Surface		Element Bot Surface		Allowable		RF	Element Top Surface		Element Bot Surface		Allowable		RF
	Element Id.	Value MPa	Element Id.	Value MPa	Criteria	Value MPa		Element Id.	Value MPa	Element Id.	Value MPa	Criteria	Value MPa	
3051	21301	14.7	21296	19.8	Ftu	427.0	21.51	21306	-12.4	21929	-9.5	Fcy	283.0	22.82
3052	21306	12.4	21929	9.5			34.44	21301	-14.7	21296	-19.8			14.26
3053	23568	8.0	24557	9.5			45.05	23585	-10.0	24229	-10.4			27.28
3054	23585	10.0	24229	10.4			41.16	23568	-8.0	24557	-9.5			29.86
3055	23586	132.4	24246	50.2			3.22	24246	-55.9	23586	-134.4			2.10
3056	24246	55.9	23586	134.4			3.17	23586	-132.4	24246	-50.2			2.13

Table 2-202 LE upper skin mass balance support panels, ultimate biaxial strength. FEM [10]

Critical load case	5055 & 5056	Inertia, 36g ±Z (up/down)
Critical ultimate stress level	± 134.4 MPa	Major/minor principal stress
Location of critical stress	See Figure 2-108	
Alloweable tensile stress	427.0 MPa	Ftu
Allowable compression stress	283.0 MPa	Fcu = Fcy Conservative cutoff used.

Not critical RF = 283/134.4= 2.10 **RF = >2.0**

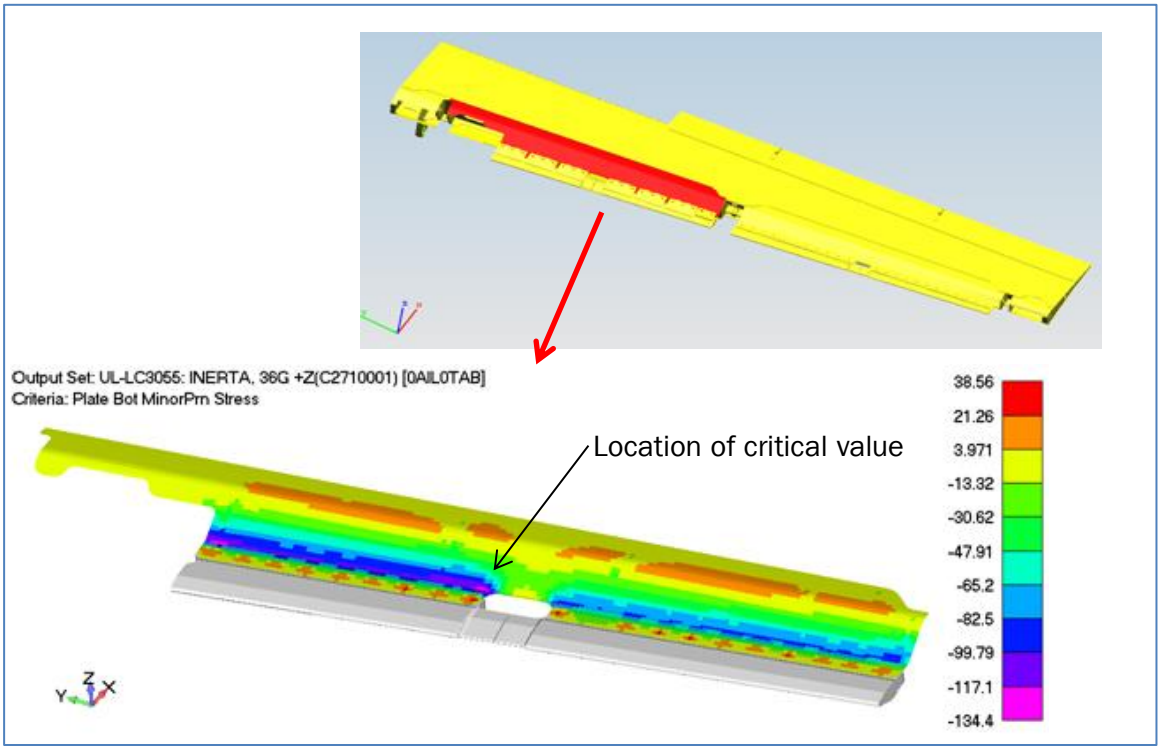

Figure 2-108 LE upper skin to mass balance joint, ultimate stress plot of critical value

Upper Skin Stress Levels at Joint with Mass Balances.
Fine Mesh FEM[10] Results. Inertia load cases alone.
Lower skin element ultimate stress levels are presented in Table 2-203 and Figure 2-109.
For wing bending and aero load cases see section 2.5.12.3.3.

	Maximum Principal Stress							Minimum Principal Stress						
Load Case	Element Top Surface		Element Bot Surface		Allowable		RF	Element Top Surface		Element Bot Surface		Allowable		RF
	Element Id.	Value MPa	Element Id.	Value MPa	Criteria	Value MPa		Element Id.	Value MPa	Element Id.	Value MPa	Criteria	Value MPa	
3051	41961	13.7	40789	17.0	Ftu	427.0	25.14	40789	-12.1	43105	-10.6	Fcy	283.0	23.44
3052	40789	12.1	43105	10.6			35.37	41961	-13.7	40789	-17.0			16.66
3053	43928	6.5	43928	8.6			49.88	41961	-7.5	43904	-9.3			30.33
3054	41961	7.5	43904	9.3			45.77	43928	-6.5	43928	-8.6			33.06
3055	44406	60.4	40942	135.2			3.15	40487	-130.7	41295	-54.8			2.16
3056	40487	130.7	41295	54.8			3.26	44406	-60.4	40942	-135.2			2.09

Table 2-203 LE upper skin mass balance support panels, ultimate biaxial strength.

Critical load case	5055 & 5056	Inertia, 36g ±Z (up/down)
Critical ultimate stress level	± 135.2 MPa	Major/minor principal stress
Location of critical stress	See Figure 2-109	
Allowable tensile stress	427.0 MPa	Ftu
Allowable compression stress	283.0 MPa	Fcu = Fcy Conservative cutoff used.

RF = 283/135.2= 2.09 **RF = >2.00**

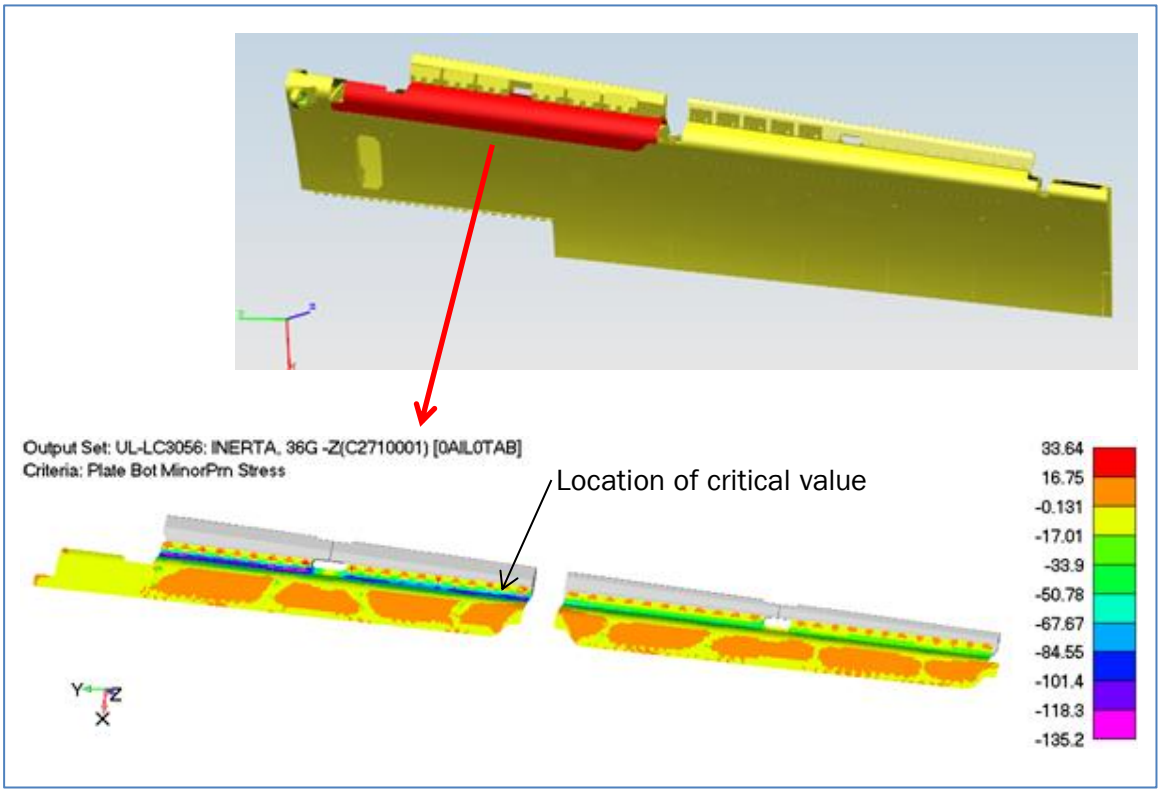

Figure 2-109 LE lower skin to mass balance joint, ultimate stress plot of critical value

Upper and Lower Skin Buckling at Joint with Mass Balances

In addition to the PESS based skin and rib panel buckling presented in sections 2.5.12.2.4 & 2.5.12.3.4, FEM [10] has been run with a linear buckling solution. Boundary conditions and loading are as the static strength checks; i.e. extracted eigenvalues are relative to ultimate loads.
A summary is presented below and the mode shapes in Figure 2-158 to

Buckling criteria: No buckling at < Ultimate Loads

Load Case		Eigenvalue	RF
3051	Inertia, 18g +X	9.98	>2.00
3052	Inertia, 18g -X	5.48	>2.00
3053	Inertia, 18g +Y]	24.91	>2.00
3054	Inertia, 18g -Y	13.11	>2.00
3055	Inertia, 36g +Z	1.82	1.82
3056	Inertia, 36g –Z	1.65	1.65

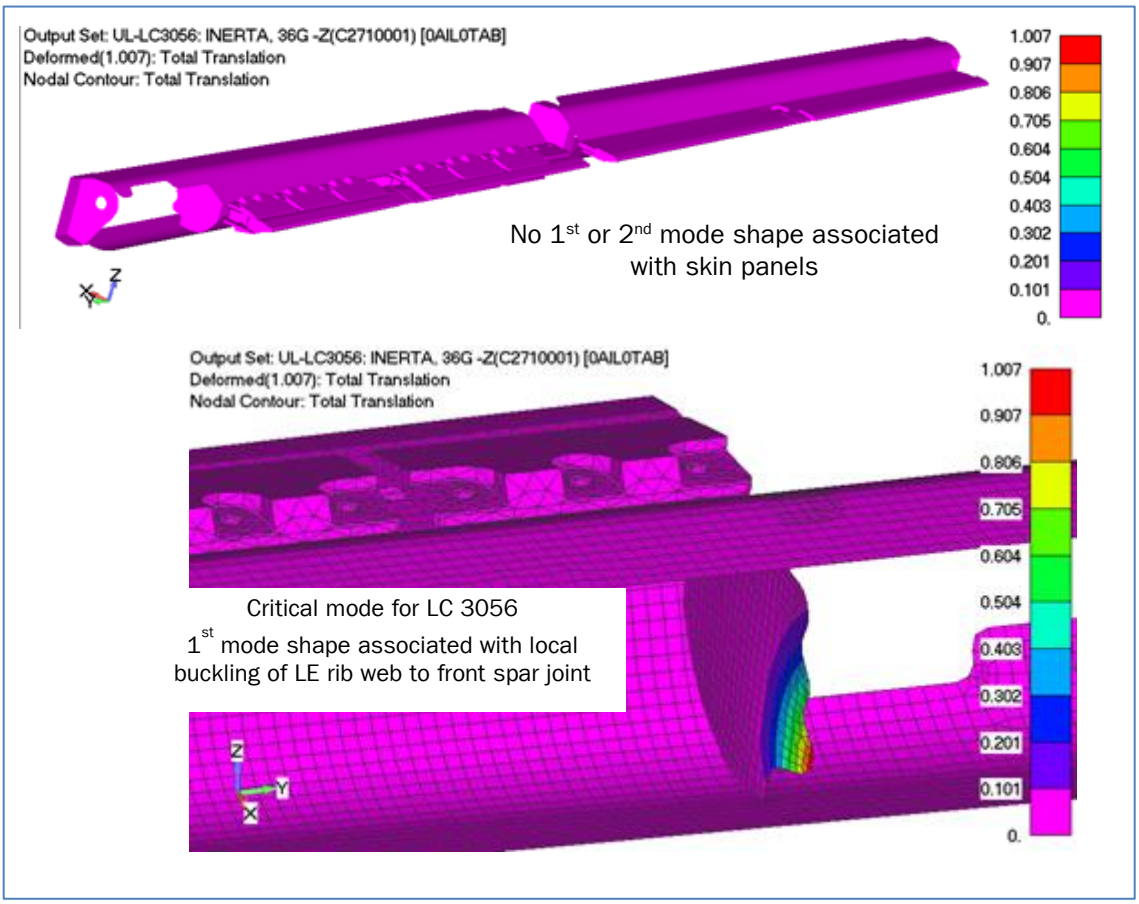

Figure 2-110 LE mass balance assy, linear buckling 1st mode, critical inertia case 3056

2.5.13 Trailing Edge

The trailing edge of the aileron is made of 5 composite panels.

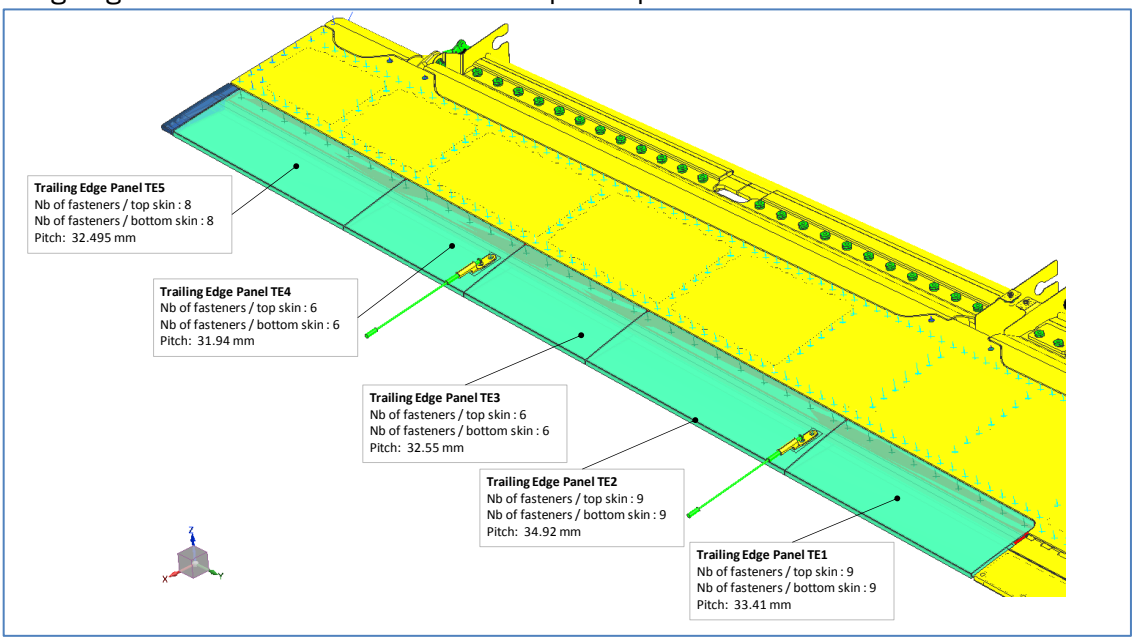

Figure 2-111: Aileron trailing edge panels

Each composite panel is attached on the top and bottom side to the metallic U-Channel. Following figure presents the detail of the TE panels' installation.

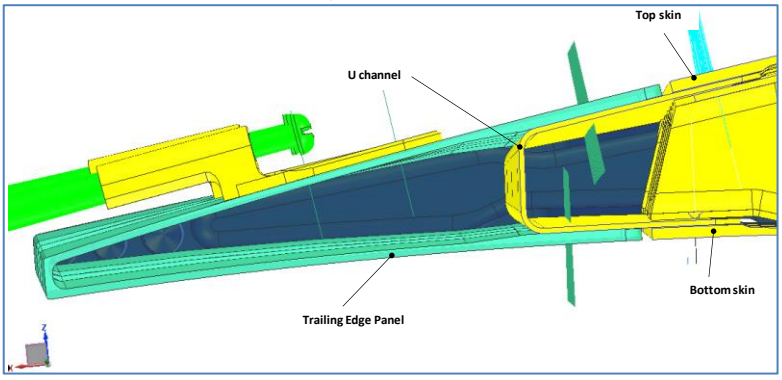

Figure 2-112: TE panels' installation

Design is very similar between the 5 TE panels. The figure below presents the design information which is the most relevant for the analysis of the part.

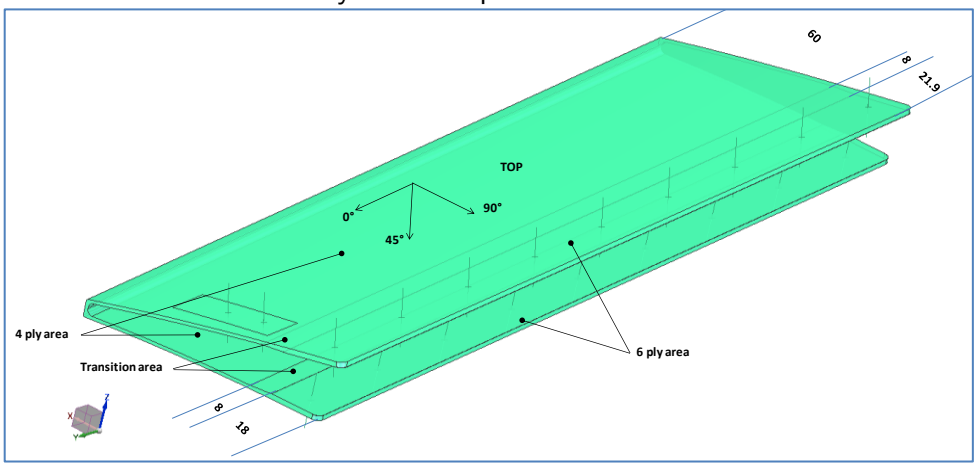

Figure 2-113: TE panels design information

The laminate used for the composite Trailing Edge Panels is 8552/AS4 AGP280.
Material properties (stiffness and strength) are provided in §2.2.2.

The trailing edge of the aileron contains two different main layups as per Figure 2-113 :
- 6 ply layup : -45/0/45/45/0/-45
- 4 ply layup : -45/0/0/-45

Thickness per ply: 0.27 mm

Details about the attachment of the TE panels to the aileron are given in the table below:

TE Panel	Fastener number	Fastener type	Pitch [mm]
TE1	9(TOP); 9(BOT)	NAS1921	33.41
TE2	9(TOP); 9(BOT)	NAS1921	34.92
TE3	6(TOP); 6(BOT)	NAS1921	32.55
TE4	6(TOP); 6(BOT)	NAS1921	31.944
TE5	8(TOP); 8(BOT)	NAS1921	32.495

Table 2-204: TE attachment fasteners

Analysis of the TE panels combined FEM results and analytical hand calculations.
The material coordinate system (MCID) is used to post process the required results in the shell elements and it is defined in the picture below:

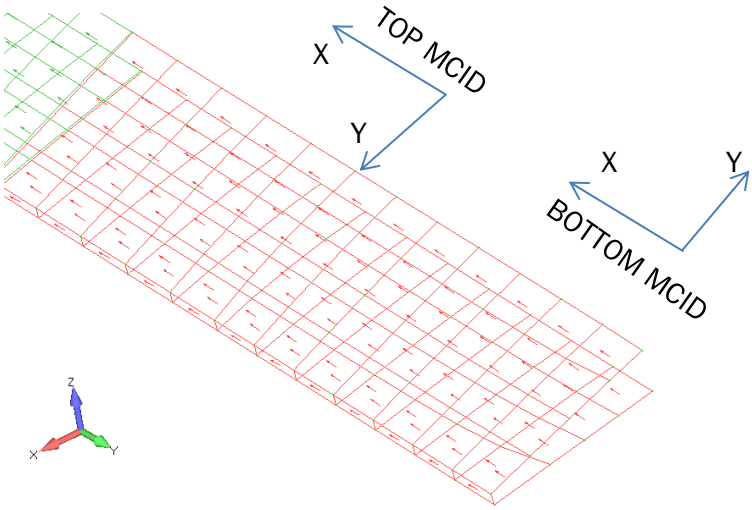

Figure 2-114: X direction of material coordinate system

All running loads and load directions used in the analysis of the trailing edge are referred with regards to the material coordinate system.

2.5.13.1 Analysis method for the TE area

Following criteria will be covered in the splice area analysis for Ultimate Load Levels (if not specified differently):

- TE Panel bearing analysis
- TE Panel bearing/bypass analysis
- TE Panel inter-rivet buckling
- U-channel bearing analysis
- U-channel inter-rivet buckling of the flange (at Limit)
- Fastener shear analysis

Following criteria will be covered in the typical area of the TE panels for Ultimate Load Levels:

- Tsai-WU criteria

2.5.13.1.1 Joint between the TE panels and the U-channel

This chapter presents the load components which are acting in the area where the TE panels are fastened to the U-channel.

Aerodynamic pressure effect
The effect of the pressure loading on the TE fastener loads is quantified via Nxy and Ny tensor post processed in the first row of CQUAD elements of the TE panel at the connection with the U channel (top and bottom).

Iso-elongation loads
Longitudinal loads in the fasteners are derived from the assumption that the TE composite panels follow the deformation of the aft metallic channel flange.
For this purpose the axial loads in the CBEAM elements, modelling the flange of the rear channel are used.

$$F_{TE_iso_elon} = F_{FEM_flange} * A_{TE} * \frac{E_{TE}}{A_{uchan} * E_{uchan}}$$

A_{TE} represents the effective area from the TE capable to react the load. 6 ply area and transition area are considered to be part of the effective width (see Figure 2-113 and §2.5.13.2.5).

A_{uchan} represents the effective area of the U-channel considered for this calculation. As calculation is considered for top and bottom locations, the Auchan represents half of the total effective area to be considered. Following figure presents the total effective area considered for the calculation.

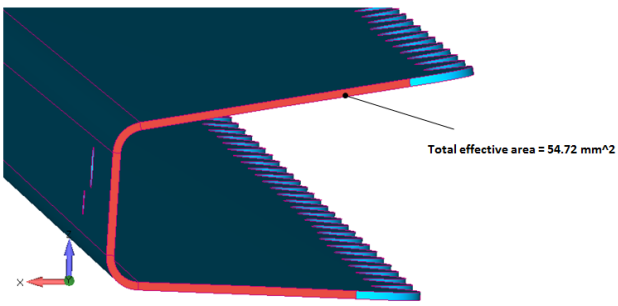

Figure 2-115: U-channel effective area

Moreover, as a conservative assumption it will be considered that this load is reacted by a fastener alone. Usually, this effect is distributed between the 3-4 end fasteners of a metallic-composite splice with regards to the splice stiffness distribution.

Thermal loads
Thermal loads are derived by hand analysis and added to the mechanical one when necessary.
Most critical thermal gradient is used (corresponds to a temperature of -55deg C);
Resulting loads will be combined to the mechanical loads using a conservative sign convention approach which maximizes the load magnitude.

2.5.13.1.2 Typical area of the TE panels (other than splice area)

Aileron FEM will be used to obtain Nx, Ny, Nxy, Mx, My, Mxy (in material coordinate system) under mechanical loading.
Thermal loads calculated at the splice level will be used to increase the FEM Nx running loads.

All the above will be used in the Tsai-WU criteria together with the minimum TE panel thickness.
Conservatively, the worst sign combination of the running loads will be considered.

2.5.13.2 Analysis of the splice area between the U-channel and the TE panels

The splice area between the TE panels and the U-channel will be analysed as per §2.5.13.1.1.

2.5.13.2.1 Aerodynamic pressure effect

Aerodynamic pressure effect on the faster loads from the TE panel to U-channel splice area is evaluated via Nxy and Ny running loads.
Following tables present the maximum load per fastener which could be achieved due to the mentioned load components.

Load case	TE Panel	Max Nxy	Min Nxy	Fastener Pitch	Max abs load from shear
		[N/mm]	[N/mm]	[mm]	[N]
2001	TE1	0.61	-0.09	33.41	20.40
	TE2	0.53	-0.08	34.92	18.42
	TE3	0.38	-0.20	32.55	12.36
	TE4	0.40	-0.23	31.944	12.72
	TE5	0.24	-0.23	32.495	7.95
3002	TE1	1.07	-3.91	33.41	130.77
	TE2	0.96	-2.94	34.92	102.64
	TE3	1.39	-1.95	32.55	63.46
	TE4	1.33	-1.89	31.944	60.27
	TE5	1.25	-1.35	32.495	43.93
3003	TE1	1.91	-1.41	33.41	63.65
	TE2	1.78	-1.13	34.92	62.19
	TE3	0.92	-0.91	32.55	29.93
	TE4	0.76	-0.62	31.944	24.22
	TE5	0.32	-0.37	32.495	12.15
4004	TE1	0.88	-3.13	33.41	104.42
	TE2	0.71	-2.43	34.92	84.95
	TE3	1.09	-1.68	32.55	54.80
	TE4	1.05	-1.63	31.944	52.21
	TE5	1.00	-1.04	32.495	33.74
5005	TE1	1.03	-3.47	33.41	116.10
	TE2	0.87	-3.70652	34.92	129.43
	TE3	1.02	-1.36	32.55	44.37
	TE4	1.07	-1.28	31.944	40.76
	TE5	0.97	-0.99	32.495	32.05

Table 2-205: Fastener Loads generated by Nxy running loads – Ultimate Level

Load case	TE Panel	Max Ny	Min Ny	Fastener Pitch	Max abs load from Ny
		[N/mm]	[N/mm]	[mm]	[N]
2001	TE1	0.41	-0.63	33.41	20.91
	TE2	0.56	-0.58	34.92	20.24
	TE3	0.49	-0.48	32.55	16.08
	TE4	0.43	-0.52	31.944	16.77
	TE5	0.43	-0.35	32.495	13.94
3002	TE1	4.11	-4.30	33.41	143.83
	TE2	4.25	-2.89	34.92	148.49
	TE3	3.07	-2.99	32.55	99.77
	TE4	2.93	-2.32	31.944	93.68
	TE5	2.10	-2.59	32.495	84.18
3003	TE1	2.73	-2.88	33.41	96.16
	TE2	3.34	-2.82	34.92	116.73
	TE3	2.82	-2.57	32.55	91.69
	TE4	2.10	-2.21	31.944	70.47
	TE5	1.31	-1.47	32.495	47.92
4004	TE1	3.29	-3.50	33.41	116.88
	TE2	3.39	-2.46	34.92	118.44
	TE3	2.42	-2.35	32.55	78.70
	TE4	2.29	-1.71	31.944	73.03
	TE5	1.40	-1.78	32.495	57.84
5005	TE1	3.88	-3.87	33.41	129.65
	TE2	5.45	-3.22	34.92	190.24
	TE3	3.11	-4.00	32.55	130.15
	TE4	3.09	-3.24	31.944	103.54
	TE5	2.41	-2.85	32.495	92.55

Table 2-206: Fastener Loads generated by Ny running loads – Ultimate Level

2.5.13.2.2 Iso-elongation loads

Following tables present the maximum load per fastener which could be achieved due to the iso-elongation between the U-channel and the TE panel.

Load case	TE Panel	Max Axial Uchan Flange	Min Axial Uchan Flange	A_{TE}	E_{TE}	A_{flange} U-channel	E_{uchan}	Max abs load Iso-displacement
		[N]	[N]	[mm^2]	[Mpa]	[mm^2]	[Mpa]	[N]
2001	TE1	33.15	-59.19	46.28	38470	27.36	72400	53.2
	TE2	39.38	-70.61	46.28	38470	27.36	72400	63.5
	TE3	28.01	-20.05	46.28	38470	27.36	72400	25.2
	TE4	39.69	-31.56	46.28	38470	27.36	72400	35.7
	TE5	20.31	-19.48	46.28	38470	27.36	72400	18.3
3002	TE1	236.97	-4.77	46.28	38470	27.36	72400	213.0
	TE2	311.69	-57.14	46.28	38470	27.36	72400	280.1
	TE3	232.10	-180.26	46.28	38470	27.36	72400	208.6
	TE4	248.00	-211.93	46.28	38470	27.36	72400	222.9
	TE5	139.97	-99.00	46.28	38470	27.36	72400	125.8
3003	TE1	191.08	-82.99	46.28	38470	27.36	72400	171.74
	TE2	205.35	-107.78	46.28	38470	27.36	72400	184.56
	TE3	111.50	14.62	46.28	38470	27.36	72400	100.22
	TE4	70.52	-9.54	46.28	38470	27.36	72400	63.38
	TE5	36.22	-18.60	46.28	38470	27.36	72400	32.55
4004	TE1	218.73	0.93	46.28	38470	27.36	72400	196.58
	TE2	280.17	-41.69	46.28	38470	27.36	72400	251.80
	TE3	167.41	-152.06	46.28	38470	27.36	72400	150.46
	TE4	190.22	-181.06	46.28	38470	27.36	72400	170.96
	TE5	108.03	-85.54	46.28	38470	27.36	72400	97.10
5005	TE1	353.72	-3.45	46.28	38470	27.36	72400	317.91
	TE2	426.38	-39.13	46.28	38470	27.36	72400	383.21
	TE3	208.44	-104.71	46.28	38470	27.36	72400	187.33
	TE4	238.40	-163.13	46.28	38470	27.36	72400	214.26
	TE5	126.64	-73.14	46.28	38470	27.36	72400	113.82

Table 2-207: Fastener Loads from iso-elongation – Ultimate Level

2.5.13.2.3 Total fastener loads (including thermal)

Following tables present the total maximum load per fastener which could be achieved due to the pressure effects, iso-elongation between the U-channel - TE pane, and thermal effects.
Loads are given at Ultimate Load level.

Load case	TE Panel	Fx (isoelong)	Fx (Nxy)	Fy (Ny)	Fx (thermal)	F shear fastener Resultant
		[N]	[N]	[N]	[N]	[N]
2001_thenv	TE1	53.2	20.4	20.9	551.4	625.3
	TE2	63.5	18.4	20.2	561.9	644.1
	TE3	25.2	12.4	16.1	492.2	530.0
	TE4	35.7	12.7	16.8	487	535.7
	TE5	18.3	8.0	13.9	534.6	561.0
3002_thenv	TE1	213.0	130.8	143.8	551.4	906.6
	TE2	280.1	102.6	148.5	561.9	956.3
	TE3	208.6	63.5	99.8	492.2	770.7
	TE4	222.9	60.3	93.7	487	775.8
	TE5	125.8	43.9	84.2	534.6	709.3
3003_thenv	TE1	171.7	63.6	96.2	551.4	792.6
	TE2	184.6	62.2	116.7	561.9	817.0
	TE3	100.2	29.9	91.7	492.2	629.1
	TE4	63.4	24.2	70.5	487	578.9
	TE5	32.6	12.1	47.9	534.6	581.3
4004_thenv	TE1	196.6	104.4	116.9	551.4	860.4
	TE2	251.8	85.0	118.4	561.9	906.4
	TE3	150.5	54.8	78.7	492.2	701.9
	TE4	171.0	52.2	73.0	487	713.9
	TE5	97.1	33.7	57.8	534.6	667.9
5005_thenv	TE1	317.9	116.1	129.6	551.4	993.9
	TE2	383.2	129.4	190.2	561.9	1091.2
	TE3	187.3	44.4	130.1	492.2	735.5
	TE4	214.3	40.8	103.5	487	749.2
	TE5	113.8	32.1	92.6	534.6	686.7

Table 2-208: Total shear fastener loads including thermal – Ultimate Level

2.5.13.2.4 RF Summary tables – Splice area

Detailed RF Summary tables are presented in this chapter for the splice area between the TE panel and the U-channel.

Following table contains the Ultimate Load Reserve Factors and associated analysis data for the TE Panel bearing, U-channel bearing and the fastener shear.

Load cases represent a combination between the indicated mechanical load and the maximum thermal gradient (-55 deg C load case); “thenv” suffix symbolises a thermal envelope load case.

Load case	TE Panel	F shear Fastener Resultant	TE panel thickness	Fastener diameter	TE panel Bearing stress	TE Bearing allowable	RF TE panel bearing	U-channel flange thickness	U-channel flange bearing allowable	RF U-channel flange bearing	Fastener shear allowable	RF TE panels to U-channel fastener shear
		[N]	[mm]	[mm]	[Mpa]	[Mpa]		[mm]	[N]		[N]	
2001_thenv	TE1	625	1.62	3.2	120.6	351	2.90	0.8	1390	2.22	2880	4.60
	TE2	644	1.62	3.2	124.2	351	2.82	0.8	1390	2.15	2880	4.47
	TE3	530	1.62	3.2	102.2	351	3.43	0.8	1390	2.62	2880	5.43
	TE4	536	1.62	3.2	103.3	351	3.39	0.8	1390	2.59	2880	5.37
	TE5	561	1.62	3.2	108.2	351	3.24	0.8	1390	2.47	2880	5.13
3002_thenv	TE1	907	1.62	3.2	174.9	351	2.00	0.8	1390	1.53	2880	3.17
	TE2	956	1.62	3.2	184.5	351	1.90	0.8	1390	1.45	2880	3.01
	TE3	771	1.62	3.2	148.7	351	2.36	0.8	1390	1.80	2880	3.73
	TE4	776	1.62	3.2	149.7	351	2.34	0.8	1390	1.79	2880	3.71
	TE5	709	1.62	3.2	136.8	351	2.56	0.8	1390	1.95	2880	4.06
3003_thenv	TE1	793	1.62	3.2	152.9	351	2.29	0.8	1390	1.75	2880	3.63
	TE2	817	1.62	3.2	157.6	351	2.22	0.8	1390	1.70	2880	3.52
	TE3	629	1.62	3.2	121.3	351	2.89	0.8	1390	2.20	2880	4.57
	TE4	579	1.62	3.2	111.7	351	3.14	0.8	1390	2.40	2880	4.97
	TE5	581	1.62	3.2	112.1	351	3.13	0.8	1390	2.39	2880	4.95
4004_thenv	TE1	860	1.62	3.2	166.0	351	2.11	0.8	1390	1.61	2880	3.34
	TE2	906	1.62	3.2	174.9	351	2.00	0.8	1390	1.53	2880	3.17
	TE3	702	1.62	3.2	135.4	351	2.59	0.8	1390	1.98	2880	4.10
	TE4	714	1.62	3.2	137.7	351	2.54	0.8	1390	1.94	2880	4.03
	TE5	668	1.62	3.2	128.8	351	2.72	0.8	1390	2.08	2880	4.31
5005_thenv	TE1	994	1.62	3.2	191.7	351	1.83	0.8	1390	1.39	2880	2.89
	TE2	1091	1.62	3.2	210.5	351	**1.66**	0.8	1390	**1.27**	2880	**2.63**
	TE3	736	1.62	3.2	141.9	351	2.47	0.8	1390	1.88	2880	3.91
	TE4	749	1.62	3.2	144.5	351	2.42	0.8	1390	1.85	2880	3.84
	TE5	687	1.62	3.2	132.5	351	2.64	0.8	1390	2.02	2880	4.19

Table 2-209: RF summary table: Bearing of TE panel and U channel; Fastener shear – Ultimate loads

Following table contains the Reserve Factors and associated analysis data for the inter-river buckling analysis of the U-channel flange; As per Ref.[20], this analysis will be carried out at Limit Load Level.

Load case	TE Panel	Effective width	U-channel flange thickness	Fastener pitch	Mechanical load X-direction	Thermal load	Total load X-direction	Stress in U-channel flange	Allowable inter rivet stress	RF
		[mm]	[mm]	[mm]	[N]	[N]	[N]	[Mpa]	[Mpa]	
2001_thenv	TE1	25	0.8	33.41	49.06	1125.1	1174.14	58.71	84.63	1.44
	TE2	25	0.8	34.92	54.59	1138.7	1193.24	59.66	77.47	1.29
	TE3	25	0.8	32.55	25.02	821.4	846.37	42.32	89.16	2.10
	TE4	25	0.8	31.944	32.26	813.8	846.04	42.30	92.57	2.18
	TE5	25	0.8	32.495	17.47	1045.2	1062.63	53.13	89.46	1.68
3002_thenv	TE1	25	0.8	33.41	229.16	1125.1	1354.24	67.71	84.63	1.24
	TE2	25	0.8	34.92	255.19	1138.7	1393.84	69.69	77.47	1.11
	TE3	25	0.8	32.55	181.38	821.4	1002.73	50.14	89.16	1.77
	TE4	25	0.8	31.944	188.77	813.8	1002.55	50.13	92.57	1.84
	TE5	25	0.8	32.495	113.15	1045.2	1158.31	57.92	89.46	1.54
3003_thenv	TE1	25	0.8	33.41	156.92	1125.1	1282.00	64.10	84.63	1.32
	TE2	25	0.8	34.92	164.50	1138.7	1303.15	65.16	77.47	1.18
	TE3	25	0.8	32.55	86.76	821.4	908.11	45.41	89.16	1.96
	TE4	25	0.8	31.944	58.40	813.8	872.18	43.61	92.57	2.12
	TE5	25	0.8	32.495	29.80	1045.2	1074.96	53.75	89.46	1.66
4004_thenv	TE1	25	0.8	33.41	200.67	1125.1	1325.75	66.29	84.63	1.27
	TE2	25	0.8	34.92	224.50	1138.7	1363.15	68.16	77.47	1.13
	TE3	25	0.8	32.55	136.84	821.4	958.19	47.91	89.16	1.86
	TE4	25	0.8	31.944	148.78	813.8	962.56	48.13	92.57	1.92
	TE5	25	0.8	32.495	87.22	1045.2	1132.38	56.62	89.46	1.58
5005_thenv	TE1	25	0.8	33.41	289.34	1125.1	1414.42	70.72	84.63	1.19
	TE2	25	0.8	34.92	341.76	1138.7	1480.41	74.02	77.47	**1.04**
	TE3	25	0.8	32.55	154.47	821.4	975.82	48.79	89.16	1.82
	TE4	25	0.8	31.944	170.01	813.8	983.79	49.19	92.57	1.88
	TE5	25	0.8	32.495	97.25	1045.2	1142.41	57.12	89.46	1.56

Table 2-210: RF summary table: Inter-rivet buckling of the U-channel flange – Limit Loads

In the event of an inter-rivet buckling of the metallic U-channel, thermal loads will be greatly reduced.
Following table contains the Reserve Factors and associated analysis data for the inter-river buckling analysis of the TE panel; this analysis will be carried out at Ultimate Load Level.

Load case	TE Panel	Effective width	TE panel thickness	Fastener pitch	Mechanical load X-direction	Thermal load	Total load X-direction	Stress in TE panel	Allowable inter rivet stress	RF
		[mm]	[mm]	[mm]	[N]	[N]	[N]	[Mpa]	[Mpa]	
2001_thenv	TE1	16	1.62	33.41	73.59	1125.1	1198.67	46.25	90.45	1.95
	TE2	16	1.62	34.92	81.88	1138.7	1220.53	47.09	82.79	1.75
	TE3	16	1.62	32.55	37.53	821.4	858.88	33.14	95.29	2.87
	TE4	16	1.62	31.944	48.39	813.8	862.17	33.26	98.94	2.97
	TE5	16	1.62	32.495	26.21	1045.2	1071.37	41.33	95.61	2.31
3002_thenv	TE1	16	1.62	33.41	343.74	1125.1	1468.82	56.67	90.45	1.59
	TE2	16	1.62	34.92	382.78	1138.7	1521.43	58.70	82.79	1.41
	TE3	16	1.62	32.55	272.07	821.4	1093.42	42.18	95.29	2.25
	TE4	16	1.62	31.944	283.16	813.8	1096.94	42.32	98.94	2.33
	TE5	16	1.62	32.495	169.72	1045.2	1214.88	46.87	95.61	2.03
3003_thenv	TE1	16	1.62	33.41	235.38	1125.1	1360.46	52.49	90.45	1.72
	TE2	16	1.62	34.92	246.75	1138.7	1385.40	53.45	82.79	1.54
	TE3	16	1.62	32.55	130.15	821.4	951.50	36.71	95.29	2.59
	TE4	16	1.62	31.944	87.60	813.8	901.38	34.78	98.94	2.84
	TE5	16	1.62	32.495	44.70	1045.2	1089.86	42.05	95.61	2.27
4004_thenv	TE1	16	1.62	33.41	301.01	1125.1	1426.09	55.02	90.45	1.64
	TE2	16	1.62	34.92	336.75	1138.7	1475.40	56.92	82.79	1.45
	TE3	16	1.62	32.55	205.26	821.4	1026.61	39.61	95.29	2.40
	TE4	16	1.62	31.944	223.17	813.8	1036.95	40.01	98.94	2.47
	TE5	16	1.62	32.495	130.84	1045.2	1176.00	45.37	95.61	2.10
5005_thenv	TE1	16	1.62	33.41	434.01	1125.1	1559.09	60.15	90.45	1.50
	TE2	16	1.62	34.92	512.64	1138.7	1651.29	63.71	82.79	**1.29**
	TE3	16	1.62	32.55	231.70	821.4	1053.05	40.63	95.29	2.34
	TE4	16	1.62	31.944	255.02	813.8	1068.80	41.23	98.94	2.39
	TE5	16	1.62	32.495	145.87	1045.2	1191.03	45.95	95.61	2.08

Table 2-211: RF summary table: Inter-rivet buckling of the TE panel splice area – Ultimate Loads

Following table contains the Reserve Factors and associated analysis data for the bearing - bypass analysis of the TE panel; this analysis will be carried out at Ultimate Load Level.
A conservative approach was adopted in applying simultaneously at the same location the maximum bypass load and the maximum fastener load.

Load case	TE Panel	Max Nx	Min Nx	Max abs Nx	Total thermal load at the middle of the joint	Effective width (min 6 ply area)	TE thickness	Bypass stress	Bearing stress	RF Compression	RF Tension
		[N/mm]	[N/mm]	[N/mm]	[N]	[mm]	[mm]	[Mpa]	[Mpa]		
2001_thenv	TE1	0.45	-0.54	0.54	1125.1	18	1.62	38.92	120.6	2.32	2.22
	TE2	0.55	-0.66	0.66	1138.7	18	1.62	39.45	124.2	2.26	2.16
	TE3	0.54	-0.20	0.54	821.4	18	1.62	28.50	102.2	2.82	2.71
	TE4	0.69	-0.33	0.69	813.8	18	1.62	28.33	103.3	2.79	2.69
	TE5	0.36	-0.18	0.36	1045.2	18	1.62	36.06	108.2	2.57	2.46
3002_thenv	TE1	3.22	-0.22	3.22	1125.1	18	1.62	40.57	174.9	1.70	1.64
	TE2	3.04	-1.93	3.04	1138.7	18	1.62	40.92	184.5	1.62	1.57
	TE3	2.46	-3.37	3.37	821.4	18	1.62	30.25	148.7	2.03	1.97
	TE4	2.63	-3.68	3.68	813.8	18	1.62	30.18	149.7	2.02	1.96
	TE5	1.18	-1.81	1.81	1045.2	18	1.62	36.96	136.8	2.11	2.03
3003_thenv	TE1	2.69	-1.57	2.69	1125.1	18	1.62	40.25	152.9	1.90	1.83
	TE2	3.30	-1.52	3.30	1138.7	18	1.62	41.08	157.6	1.85	1.78
	TE3	1.26	-0.85	1.26	821.4	18	1.62	28.95	121.3	2.43	2.35
	TE4	0.68	-0.61	0.68	813.8	18	1.62	28.33	111.7	2.62	2.53
	TE5	0.35	-0.20	0.35	1045.2	18	1.62	36.06	112.1	2.50	2.39
4004_thenv	TE1	2.29	-0.39	2.29	1125.1	18	1.62	40.00	166.0	1.78	1.71
	TE2	2.58	-1.46	2.58	1138.7	18	1.62	40.64	174.9	1.70	1.64
	TE3	1.77	-2.82	2.82	821.4	18	1.62	29.91	135.4	2.21	2.14
	TE4	2.01	-3.11	3.11	813.8	18	1.62	29.82	137.7	2.18	2.11
	TE5	0.87	-1.42	1.42	1045.2	18	1.62	36.72	128.8	2.22	2.14
5005_thenv	TE1	3.52	-0.47	3.52	1125.1	18	1.62	40.76	191.7	1.57	1.52
	TE2	4.51	-1.50	4.51	1138.7	18	1.62	41.83	210.5	**1.44**	**1.40**
	TE3	2.29	-2.24	2.29	821.4	18	1.62	29.58	141.9	2.12	2.06
	TE4	2.26	-2.85	2.85	813.8	18	1.62	29.67	144.5	2.09	2.03
	TE5	0.96	-1.45	1.45	1045.2	18	1.62	36.74	132.5	2.17	2.09

Table 2-212: RF summary table: Bearing/Bypass interaction for TE panel – Ultimate Loads

2.5.13.2.5 Detailed analysis of the most critical location

Critical location: Trailing Edge Panel TE2 (see Figure 2-111)

Critical mechanical load case: 5005

Critical thermal load case: max gradient is considered (load case 7093 - –55deg). Use of positive/negative signs on the results covers other thermal configurations.

FEM data:
Axial loads in the U-channel flanges (modelled by CBEAM elements) are presented below; Max and min values are recorded and could be verified against values from Table 2-207.
Max absolute axial load: 426.38 N

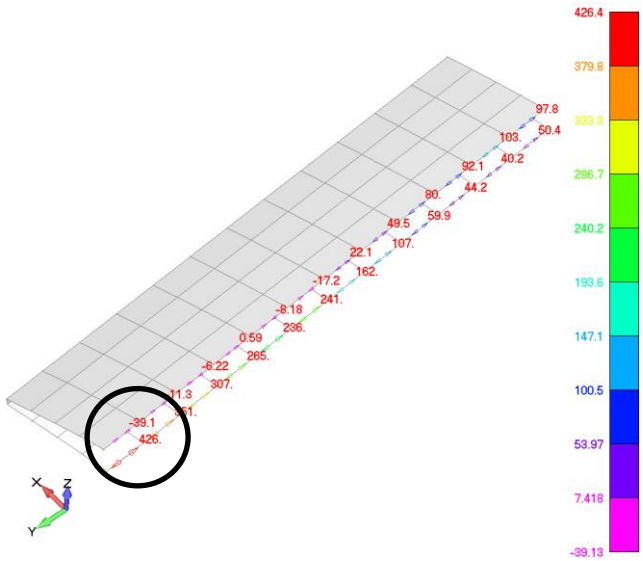

Figure 2-116: Axial load in U-channel flanges – FEM results – Ultimate Load

Ny running loads (in MCID) in the row of elements corresponding to the splice between the TE panels and the U-channel are presented below; Max and min values are recorded and could be verified against values from Table 2-207.

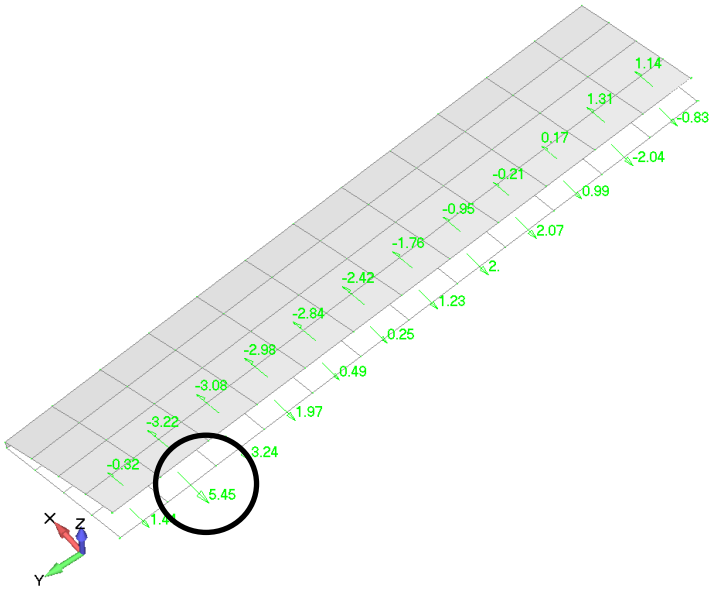

Figure 2-117: Ny running loads in the TE – FEM results – Ultimate Load

Nxy running loads (in MCID) in the row of elements corresponding to the splice between the TE panels and the U-channel are presented below; Max and min values are recorded and could be verified against values fromTable 2-207.

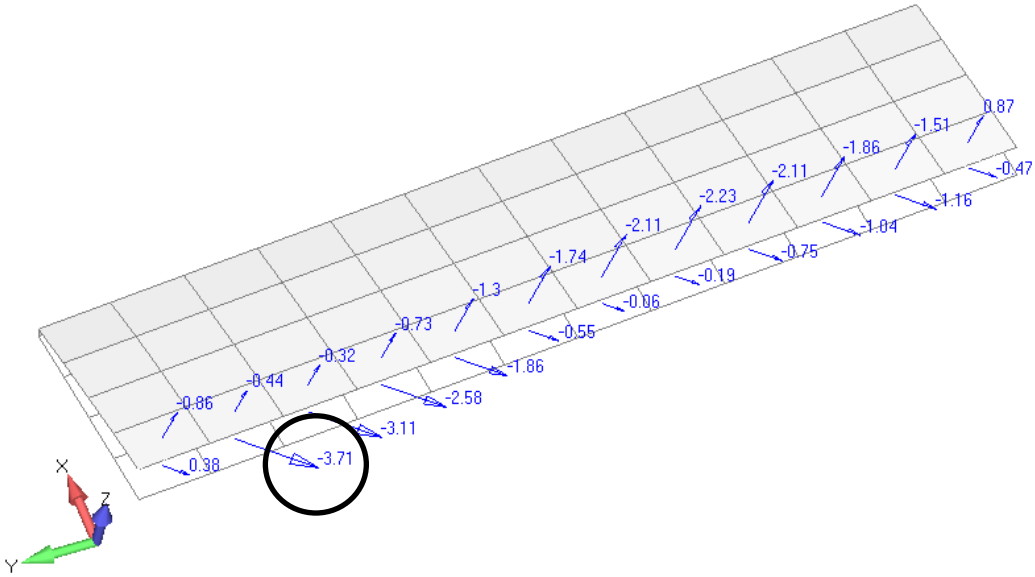

Figure 2-118: Nxy running loads in the TE – FEM results – Ultimate Load

Nx running loads (in MCID) in the row of elements corresponding to the splice between the TE panels and the U-channel are presented below; Max and min values are recorded and could be verified against values from Table 2-211.

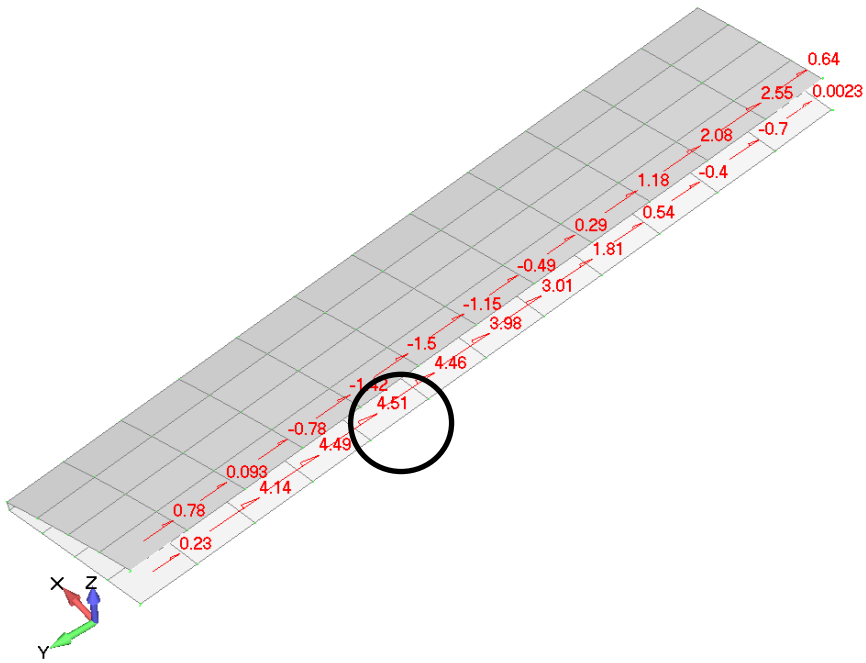

Figure 2-119: Nx running loads in the TE – FEM results – Ultimate Load

Iso-elongation loads

Geometrical and material properties

U-channel Modulus (Al) $E_{uchan} := 72.4 \cdot GPa$

U-channel flange thickness $t_{uchan} := 0.8 \cdot mm$

U-channel Effective Area
(upper flange + half of the web) $A_{uchan} := 27.36mm^2$

TE Effective Area
(6 ply area + transition area) $A_{TE} := (21.9 \cdot 6 \cdot 0.27 + 8 \cdot 5 \cdot 0.27) \cdot mm^2$ $A_{TE} = 46.278 \cdot mm^2$

TE panel modulus 6ply area (CFRP) $E_{TE} := 38.47 \cdot GPa$

Input loads

Max absolute flange FEM load $F_{FEM_flange} := 426.38N$

Iso-elongation load calculation (X dir of MCID)

$$F_{TE_iso_elong} := F_{FEM_flange} \cdot A_{TE} \cdot \frac{E_{TE}}{A_{uchan} \cdot E_{uchan}} \qquad F_{TE_iso_elong} = 383.21\,N$$

Thermal loads

Geometrical and material properties

U-channel Modulus (Al) $E_{uchan} := 72.4 \cdot GPa$

U-channel flange thickness $t_{uchan} := 0.8 \cdot mm$

U-channel Effective Area (upper flange + half of the web) $A_{uchan} := 27.36mm^2$

U-channel CTE (Al) $\alpha_{uchan} := 23 \cdot \mu s \cdot K^{-1}$

TE panel modulus 6ply area (CFRP) $E_{TE} := 38.47 \cdot GPa$

TE panel thickness (averaged within the effective width considered) $t_{TE} := \frac{21.9 \cdot 6 \cdot 0.27mm + 8 \cdot 5 \cdot 0.27mm}{21.9 + 8}$ $t_{TE} = 1.548\,mm$

TE Effective Area (6 ply area + transition area) $A_{TE} := (21.9 \cdot 6 \cdot 0.27 + 8 \cdot 5 \cdot 0.27) \cdot mm^2$ $A_{TE} = 46.278 \cdot mm^2$

TE panel CTE (CFRP) $\alpha_{TE} := 2.88 \mu s \cdot K^{-1}$

Fastener Diameter $D_{fast} := 3.2 \cdot mm$

Fastener Modulus (Al) $E_{fast} := 71GPa$

Inter Bolt distance $d_p := 34.92mm$

Number of bolts $N_{bolts} := 9$

Max Thermal Gradient $\Delta T := 75 \cdot K$

Bolt Flexibilites (as per the Huth formula)

$$C_H(t_a, t_b, d, n, E_a, E_b, E_f, PType, BType) := \left| \begin{array}{l} b \leftarrow \left| \begin{array}{ll} 3.0 & \text{if } PType = \text{"Metal"} \\ 4.2 & \text{if } PType = \text{"CFRP"} \end{array} \right. \\ a \leftarrow \left| \begin{array}{ll} \frac{2}{3} & \text{if } BType = \text{"Bolt"} \\ \frac{2}{5} & \text{if } BType = \text{"Rivet"} \end{array} \right. \\ \left(\frac{t_a + t_b}{2 \cdot d}\right)^a \cdot \frac{b}{n} \cdot \left(\frac{1}{t_a \cdot E_a} + \frac{1}{n \cdot t_b \cdot E_b} + \frac{1}{2 \cdot t_a \cdot E_f} + \frac{1}{2 \cdot n \cdot t_b \cdot E_f}\right) \end{array} \right.$$

Total Stiffness $C_{fast} := C_H(t_{uchan}, t_{TE}, D_{fast}, 1, E_{uchan}, E_{TE}, E_{fast}, \text{"CFRP"}, \text{"Rivet"})$ $C_{fast} = 1.3 \times 10^{-7} \cdot m \cdot N^{-1}$

$K_{fast} := C_{fast}^{-1}$ $K_{fast} = 7.5001 \times 10^{6} \cdot N \cdot m^{-1}$

Number of Plate Sections $N_s := N_{bolts} - 1$

Populating Compliance Matrix Rows $i := 1 .. N_{bolts}$

$j := 1 .. N_{bolts}$

$$As_{i,j} := \begin{cases} \dfrac{d_p}{A_{uchan} \cdot E_{uchan}} + \dfrac{d_p}{A_{TE} \cdot E_{TE}} & \text{if } j \le i - 1 \\ \dfrac{d_p}{A_{uchan} \cdot E_{uchan}} + \dfrac{d_p}{A_{TE} \cdot E_{TE}} + \dfrac{1}{K_{fast}} & \text{if } j = i \\ -\dfrac{1}{K_{fast}} & \text{if } j = i + 1 \\ 0 & \text{if } j > i + 1 \\ \dfrac{1}{K_{fast}} & \text{if } i = N_{bolts} \end{cases}$$

Populating Load Matrix Rows

$$Bs_i := \begin{cases} d_p \cdot (\alpha_{TE} - \alpha_{uchan}) \cdot \Delta T & \text{if } i \le N_{bolts} - 1 \\ 0 & \text{if } i = N_{bolts} \end{cases}$$

In-plane Thermal Loads $S_{th} := As^{-1} \cdot Bs$

$S_{th}^T = (-561.9 \quad -323.7 \quad -175.9 \quad -77.2 \quad 0.0 \quad 77.2 \quad 175.9 \quad 323.7 \quad 561.9) \cdot N$

$S_{th_max} := \max(S_{th})$ $S_{th_max} = 561.94 \cdot N$

Maximum bypass load $F_{th_bypass} := \left| S_{th_1} + S_{th_2} + S_{th_3} + S_{th_4} \right|$ $F_{th_bypass} = 1138.65 \cdot N$

Calculation of total fastener loads

Geometrical properties

Fastener pitch $p := 34.92mm$

Input loads (Ultimate Level)

Ny max absolute running load $N_y := 5.45 \frac{N}{mm}$

Nxy max absolute running load $N_{xy} := 3.706 \frac{N}{mm}$

Iso-elongation load (X dir of MCID) $F_{TE_iso_elong} = 383.21\,N$

Maximum thermal load (X dir of MCID) $F_{th} := 561.9N$

Total fastener shear load calculation (Ultimate Level)

$F_{x_mech_UL} := N_{xy} \cdot p + F_{TE_iso_elong}$ $F_{x_mech_UL} = 512.63\,N$

$F_{x_shear_UL} := F_{x_mech_UL} + F_{th}$ $F_{x_shear_UL} = 1074.53\,N$

$F_{y_shear_UL} := N_y \cdot p$ $F_{y_shear_UL} = 190.31\,N$

$F_{tot_shear_UL} := \sqrt{F_{x_shear_UL}^2 + F_{y_shear_UL}^2}$ $F_{tot_shear_UL} = 1091.25\,N$

Calculation of Bearing and Fastener Shear Reserve Factors (RF)

Geometrical and material properties

TE bearing allowable $F_{bu_TE} := 351MPa$

TE thickness in the splice area $t_{TE} := 6 \cdot 0.27mm$ $t_{TE} = 1.62\,mm$

Fastener diamater $d_{fast} := 3.2mm$

U-channel bearing allowable (CR3223 allowable considered for the tail of the NAS1921) $F_{bu_uchan} := 1390N$

Fastener shear allowable (NAS1921M allowable considered for NAS1921) $F_{fast_sh} := 2880N$

Fastener shear RF

$$RF_{fast_sh} := \frac{F_{fast_sh}}{F_{tot_shear_UL}}$$

$$\boxed{RF_{fast_sh} = 2.639}$$

Bearing of the U-channel RF

$$RF_{bear_uchan} := \frac{F_{bu_uchan}}{F_{tot_shear_UL}}$$

$$\boxed{RF_{bear_uchan} = 1.274}$$

Bearing of the Trailing Edge panel RF

$$RF_{bear_TE} := \frac{F_{bu_TE}}{\frac{F_{tot_shear_UL}}{t_{TE} \cdot d_{fast}}}$$

$$\boxed{RF_{bear_TE} = 1.667}$$

Calculation of Inter rivet buckling Reserve Factors (RF)

Following conservative assumptions are made:

- maximum thermal gradient generates compression on the analysed part

- maximum mechanical loads are combined with the maximum thermal load in the part to be analysed. Maximum thermal load is obtained at the middle of the splice under a thermal load and equals to the summation of thermal loads on the fasteners at the right or left of the splice. The value of this load is identified as F.bypass_th in the thermal load calculation section.

Geometrical and material properties

U-channel Modulus (Al)	$E_{c_uchan} := 73.8 \cdot GPa$
U-channel flange thickness	$t_{uchan} = 0.8\,mm$
U-channel flange width	$w_{uchan} := 25mm$
TE panel thickness	$t_{TE} = 1.62\,mm$
*TE panel width for inter rivet buckling (a 5*fast diameter wffective width is considered)*	$w_{TE} := 5 \cdot 3.2mm$
Fastener pitch	$p = 34.92\,mm$

Interrivet buckling allowables

For the U-channel flange a fixity factor of 2 is used as the protruding tail of the rivet is on that side.

For the TE panel a fixity factor of 1 is used as the countersunk head of the rivet is on that side.

$$F_{all_ir_uchan} := 2 \cdot E_{c_uchan} \cdot \left(\frac{t_{uchan}}{p}\right)^2 \qquad F_{all_ir_uchan} = 77.467\,MPa$$

$$F_{all_ir_TE} := 1 \cdot E_{TE} \cdot \left(\frac{t_{TE}}{p}\right)^2 \qquad F_{all_ir_TE} = 82.795\,MPa$$

Total compressive load calculation (Limit Level)

Thermally induced compressive load at the middle of the splice $F_{th_bypass} := 1138.65N$

Ultimate to Limit factor $f := \frac{1}{1.5}$ $\quad f = 0.667$

$$F_{x_ir_mech_LL} := f\,N_{xy} \cdot p + f \cdot F_{TE_iso_elong} \qquad F_{x_ir_mech_LL} = 341.75\,N$$

$$F_{x_ir_LL} := F_{x_ir_mech_LL} + F_{th_bypass} \qquad F_{x_ir_LL} = 1480.4\,N$$

Total compressive load calculation (Ultimate Level)

Thermally induced compressive load at the middle of the splice $F_{th_bypass} = 1138.65\,N$

$F_{x_ir_mech_UL} := N_{xy} \cdot p + F_{TE_iso_elong}$ $F_{x_ir_mech_UL} = 512.63\,N$

$F_{x_ir_UL} := F_{x_ir_mech_UL} + F_{th_bypass}$ $F_{x_ir_UL} = 1651.28\,N$

Inter rivet buckling U-channel - RF calculation at Limit

Inter rivet buckling applied stress $F_{ir_uchan} := \frac{F_{x_ir_LL}}{t_{uchan} \cdot w_{uchan}}$ $F_{ir_uchan} = 74.02\,MPa$

$RF_{ir_uchan} := \frac{F_{all_ir_uchan}}{F_{ir_uchan}}$ $\boxed{RF_{ir_uchan} = 1.047}$

Inter rivet buckling TE panel - RF calculation at Ultimate

Inter rivet buckling applied stress $F_{ir_TE} := \frac{F_{x_ir_UL}}{t_{TE} \cdot w_{TE}}$ $F_{ir_TE} = 63.707\,MPa$

$RF_{ir_TE} := \frac{F_{all_ir_TE}}{F_{ir_TE}}$ $\boxed{RF_{ir_TE} = 1.2996}$

Calculation of bearing-bypass Reserve Factors (RF)

Bypass load is present only in the X direction of the MCID; It represents a summation between the existing FEM Nx running loads and the Nx running loads generated by the thermal loading.

Maximum bearing load(stress) has previously been calculated for the bearing analysis of the TE panel.

Bearing bypass interaction domain for 90/WET will be considered for all calculations.

Geometrical and material properties

TE panel width for bearing-bypass analysis (min width of the 6ply area between TOP and BOTTOM is considered) $w_{bb_TE} := 18mm$

Input loads (Ultimate Level)

Nx max absolute running load $N_x := 4.51 \frac{N}{mm}$

Bearing-bypass environment

Bearing stress on TE panel $F_{x_bu_TE} := \frac{F_{tot_shear_UL}}{t_{TE} \cdot d_{fast}}$ $F_{x_bu_TE} = 210.503\,MPa$

Bypass load $N_{x_bypass} := N_x + \frac{F_{th_bypass}}{w_{bb_TE}}$ $N_{x_bypass} = 67.768 \frac{N}{mm}$

Bypass stress $F_{x_bypass} := \frac{N_{x_bypass}}{t_{TE}}$ $F_{x_bypass} = 41.832\,MPa$

Positive and negative bypass running load will be considered in order to cover all thermal configurations.

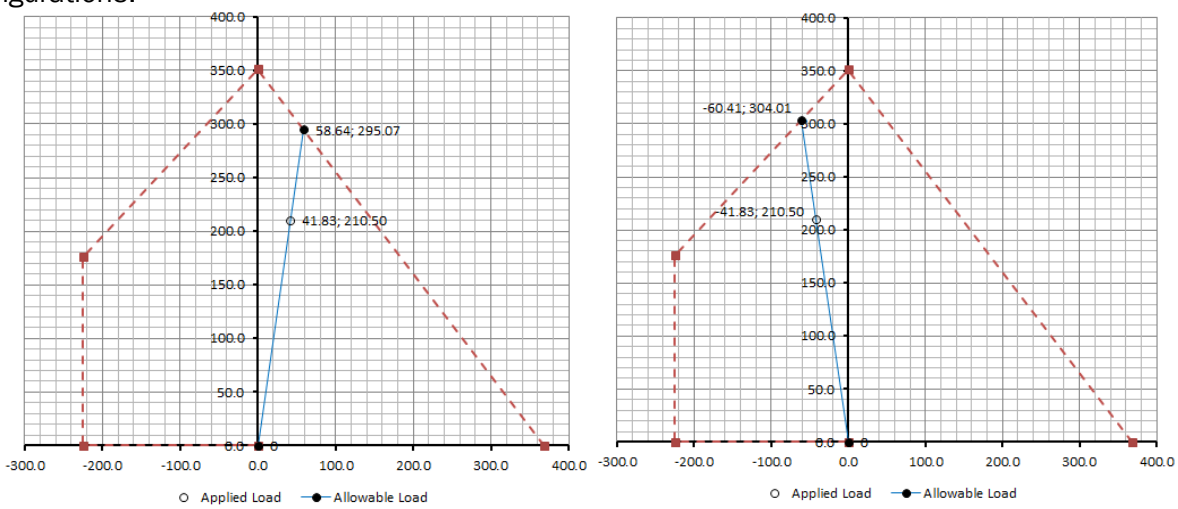

Figure 2-120: Bearing-bypass interaction for positive and negative bypass load

Based on the values from the charts, Bearing-bypass RF is calculated:

$$RF_{bb_positiv} := \frac{\sqrt{58.64^2 + 295.07^2}}{\sqrt{41.83^2 + 210.50^2}}$$

$$\boxed{RF_{bb_positiv} = 1.40}$$

$$RF_{bb_negativ} := \frac{\sqrt{304.01^2 + 60.41^2}}{\sqrt{41.83^2 + 210.50^2}}$$

$$\boxed{RF_{bb_negativ} = 1.44}$$

2.5.13.3 Analysis of the typical area of the TE panels (other than splice area)

Typical area of the TE panels is analysed by using the FEM results for Nx, Ny, Nxy, Mx, My, Mxy (in material coordinate system) under mechanical loading.
Thermal loads calculated at the splice level will be used to increase the FEM Nx running loads and will conservatively be considered to act also on the typical area.
All possible sign combinations of the absolute values of the running loads for above will be used to generate Tsai WU RF;
WET/90 allowables per ply will be used; BVID allowables will be considered.

		TE Panels running loads					
Load case	TE Panel	Max abs Nx (including thermal)	Max abs Ny	Max abs Nxy	Max abs Myy	Max abs Mxx	Max abs Mxy
		[N/mm]	[N/mm]	[N/mm]	[Nmm/mm]	[Nmm/mm]	[Nmm/mm]
2001_thenv	TE1	63.05	0.63	0.61	0.38	0.26	0.21
	TE2	63.92	0.58	0.53	0.39	0.27	0.25
	TE3	46.17	0.49	0.38	0.42	0.32	0.28
	TE4	45.90	0.52	0.40	0.44	0.34	0.29
	TE5	58.42	0.43	0.24	0.53	0.38	0.38
3002_thenv	TE1	65.72	4.30	3.91	2.94	2.05	1.54
	TE2	66.30	4.25	2.94	2.68	1.92	1.75
	TE3	49.00	3.07	1.95	2.63	2.00	1.81
	TE4	48.89	2.93	1.89	2.49	1.90	1.68
	TE5	59.87	2.59	1.35	2.23	1.60	1.57
3003_thenv	TE1	65.20	2.88	1.91	2.97	2.05	1.31
	TE2	66.56	3.34	1.78	3.21	2.19	1.95
	TE3	46.89	2.82	0.92	2.79	2.00	1.81
	TE4	45.89	2.21	0.76	2.29	1.65	1.43
	TE5	58.42	1.47	0.37	1.88	1.33	1.21
4004_thenv	TE1	64.80	3.50	3.13	2.33	1.62	1.21
	TE2	65.84	3.39	2.43	2.14	1.52	1.40
	TE3	48.45	2.42	1.68	2.10	1.59	1.44
	TE4	48.32	2.29	1.63	2.00	1.52	1.35
	TE5	59.49	1.78	1.04	1.82	1.30	1.28
5005_thenv	TE1	66.02	3.88	3.47	2.60	1.78	1.38
	TE2	67.77	5.45	3.71	2.66	1.81	1.35
	TE3	47.92	4.00	1.36	3.01	2.20	1.69
	TE4	48.06	3.24	1.28	2.97	2.19	1.67
	TE5	59.51	2.85	0.99	1.95	1.62	1.72

Table 2-213: Running loads used for the analysis of the TE panel typical area (Ultimate Loads)

Following table presents the Tsai Wu Reserve Factors calculated using ESACOMP; The sign configuration providing the lowest reserve factor for each panel s also provided.

		TE Panels running loads						RF Tsai-Wu
Load case	TE Panel	Max abs Nx (including thermal)	Max abs Ny	Max abs Nxy	Max abs Mxx	Max abs Myy	Max abs Mxy	
		[N/mm]	[N/mm]	[N/mm]	[Nmm/mm]	[Nmm/mm]	[Nmm/mm]	
2001_thenv	TE1	-63.05	0.63	0.61	0.26	-0.38	0.21	2.67
	TE2	-63.92	0.58	0.53	0.27	-0.39	0.25	2.63
	TE3	-46.17	0.49	0.38	0.32	-0.42	0.28	3.57
	TE4	-45.90	0.52	0.40	0.34	-0.44	0.29	3.58
	TE5	-58.42	0.43	0.24	0.38	-0.53	0.38	2.83
3002_thenv	TE1	-65.72	4.30	3.91	2.05	-2.94	1.54	2.03
	TE2	-66.30	4.25	2.94	1.92	-2.68	1.75	2.05
	TE3	-49.00	3.07	1.95	2.00	-2.63	1.81	2.58
	TE4	-48.89	2.93	1.89	1.90	-2.49	1.68	2.62
	TE5	-59.87	2.59	1.35	1.60	-2.23	1.57	2.32
3003_thenv	TE1	-65.20	2.88	1.91	2.05	-2.97	1.31	2.05
	TE2	-66.56	3.34	1.78	2.19	-3.21	1.95	**1.98**
	TE3	-46.89	2.82	0.92	2.00	-2.79	1.81	2.65
	TE4	-45.89	2.21	0.76	1.65	-2.29	1.43	2.84
	TE5	-58.42	1.47	0.37	1.33	-1.88	1.21	2.46
4004_thenv	TE1	-64.80	3.50	3.13	1.62	-2.33	1.21	2.16
	TE2	-65.84	3.39	2.43	1.52	-2.14	1.40	2.16
	TE3	-48.45	2.42	1.68	1.59	-2.10	1.44	2.76
	TE4	-48.32	2.29	1.63	1.52	-2.00	1.35	2.80
	TE5	-59.49	1.78	1.04	1.30	-1.82	1.28	2.43
5005_thenv	TE1	-66.02	3.88	3.47	1.78	-2.60	1.38	2.09
	TE2	-67.77	5.45	3.71	1.81	-2.66	1.35	2.02
	TE3	-47.92	4.00	1.36	2.20	-3.01	1.69	2.11
	TE4	-48.06	3.24	1.28	2.19	-2.97	1.67	2.54
	TE5	-59.51	2.85	0.99	1.62	-1.95	1.72	2.36

Table 2-214: Tsai WU Reserve factors for TE typical area

Remark:
Lowest ESACOMP RF is 1.9895; This is presented as 1.98, as per requirement from [1].
Detailed calculation from ESACOMP presented on the following page provides a RF of 1.99, as RF is rounded up by ESACOMP in the analysis printout mode.

2.5.13.3.1 Detailed analysis of the most critical location

Detailed analysis originating form ESACOMP is presented below:

Laminate FPF analysis

Laminate : 4plies_BVID_WET_P90
Modified : Mon Nov 28 09:30:01 2016

Lay-up : (-45a/0a/0a/-45a) h = 1.08 mm

Ply
a 8552/AS4 AGP280_4ply_allow_BVID_WET_P90

Load : 3003_thenv_TE2_35
Modified : Mon Dec 05 11:03:25 2016
Type : Forces and moments (Var.;E)

N_x = -66555.2 N/m M_x = 2.18533 Nm/m
N_y = 3342.86 N/m M_y = -3.20659 Nm/m
N_xy = 1780.88 N/m M_xy = 1.9492 Nm/m

Q_x = 0 N/m
Q_y = 0 N/m

Factor of safety : FoS^v = 1
Failure criterion : Tsai-Wu; Max strain; Von Mises; Out-of-plane shear; Out-of-plane shear; None
(UD; non-UD; homogeneous; honeyc. core; foam/other core; adhesive)
Failure crit. param. : Tsai-Wu F_12*=0
Stress/strain recovery : layer top/bottom

Laminate reserve factors

	FPF	Mode	FPF-only	Mode	Crit. layers	ILS	Crit. interf.
RF =	1.99	1c	1.99	1c	2(0°)	-	-

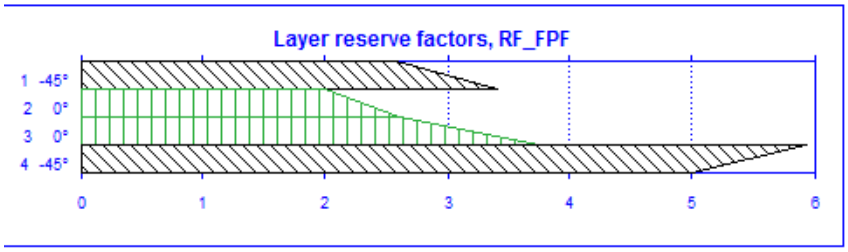

Layer reserve factors - FPF

Ply	theta °		RF	
1 a	-45	t	2. 2.57	s
		b	3.40	
2 a	0	t	1. 1.99	1c
		b	2.60	
3 a	0	t	3. 2.60	1c
		b	3.75	
4 a	-45	t	4. 5.94	1c
		b	5.00	

2.5.14 Trim Tab

This section documents the analysis of the trim tab assembly. Assembly components are listed below and shown in Figure 2-121 . Analysis for the control rods and actuator are not covered in this report, see report ref. ER 24-000627.
The trim tab assembly is analysed in calculation file [13]. The analysis is described in this section and illustrated with worked examples.
The following strength checks are performed:

Piano hinge	Lug and pin bending analysis
Actuator arms	Tang section strength, lug and pin bending analysis.
Strength and stability of machined body	Solid model (CTET10) FEM based approach

<u>Assembly Components</u>
The primary components of the trim tab assembly (shown in Figure 2-121) are:

Primary body,	Machined body, (shown in blue).	
Tab-side piano hinge	Mounted on the machined body	(shown in dark green)
Aileron side piano hinge	Mounted to the aileron rear spar	(shown in orange)
Flettner actuation & control	rods	(shown in yellow)
Lower cover panels	Mounted on the machined body	(shown in transparent pink)

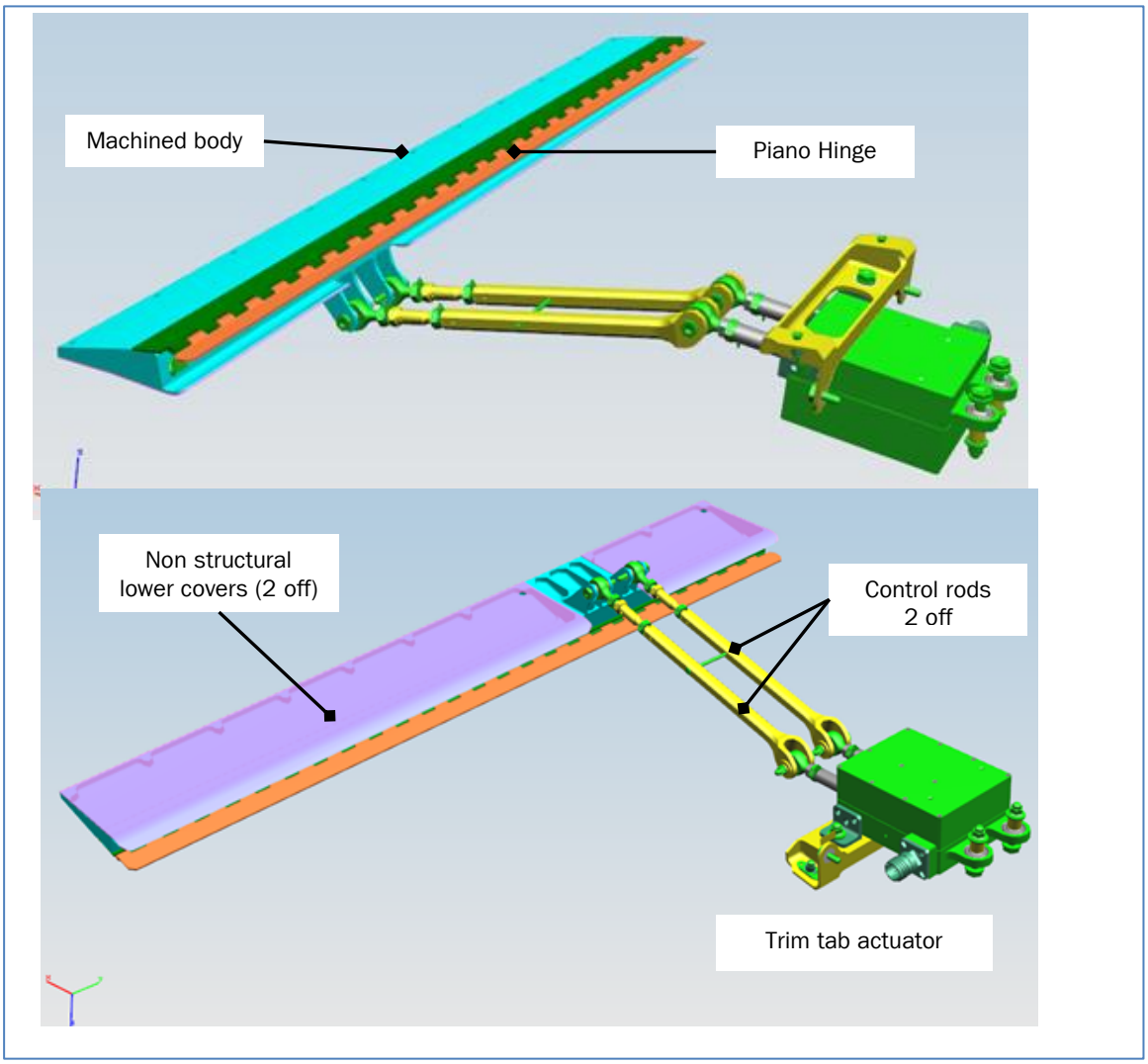

Figure 2-121 Trim tab assembly.

2.5.14.1 Calculation File, FEM, Geometry and Materials

The table below and Figure 2-61 & Figure 2-62 provide an overview of data for the analysis.

Part	Part No.	Calculation Files			Material
		Id	Geometry	FEM	
M/C Body	557.60.24309/10	13	Table 6-24	11	2124-T851, A basis
Hinge half	557.60.24.419/20	13	Table 6-24	11	7075-T73511
Hinge half	557.60.24.421/22				
Pin	557.60.24.099/100				17-7 PH cond C
Skin (fairing)	557.60.24.311/12	-	-	-	2024-T3 sheet
Skin (fairing)	557.60.24.319/20				

Table 2-215 Trim tab, overview of calculation files, geometry and materials

2.5.14.2 Load Case Applicability

Load cases applicable to the trim tab assembly are given in Table 2-216.These are a subset of those described in section 2.3 and Table 2-70.

Load Case Applicability Table for Trim Tab Assembly						
Angle [°]	-25	-22	0	3	10	15
DFEM	10	20	30	40	50	60
Applicable Load Case Id's.	Aerodynamic + Wing Bending					
		2001	3002 3003 3013	4004	5005 5015	
	Flight Control System					
	1541 1542 1543		3541 3542 3543			6541 6542 6543
	Inertia					
	None					

Table 2-216 Load case applicability table for trim tab assembly.

All the aileron load cases are applicable to the trim tab. However to simplify the analysis, the five cases have been down selected to two. The selected cases are those that give the maximum +ve and minimum –ve (piano) hinge moments.

Load Case	Report Id	Aileron Config	My*[N. mm]
RP-MT12-502-AN225	2001	-22 ail / 0tab	-600.
VG-MF-003_A5	3002	0ail/0tab	-2968.
VG-MF-402_AN6	3003	0ail / 0tab	9222.
RP-MT51-003-A066	4004	3ail / 0tab	-4136.
RP-MT12-202-A171	5005	10ail / 0tab	-8061.

Reference coordinate system: CFD model C2710005.

Critical +ve My case: 3003
Critical -ve My case: 5005

2.5.14.3 Trim Tab Machined Body

This section provides static strength substantiation for the trim tab. A simple overview of the trim tab assembly is shown in Figure 2-121.

M/C'd Body	Part No. 5576024309/10
	Class 2 part A basis allowables used.
	Aluminium , 2124-T851
	Plate thickness, 50.81 - 76.20

2.5.14.3.1.1 Trim Tab Body Section Stress Levels

Bracket body stress levels have been determined using a linear FE approach. A brief overview of the FEM [11] is given in section 2.4.3.
For the purposes of determining section/flange strength RF's the FEM is divided into four zones (FEMAP groups) see Figure 2-122.

Plain sections RF's for:

Surface stress	max principal vs Ftu
Surface stress	min principal vs. Ftu
Flange/web centre stress	max principal vs Ftu
Flange/web centre stress	min principal vs local buckling allowable

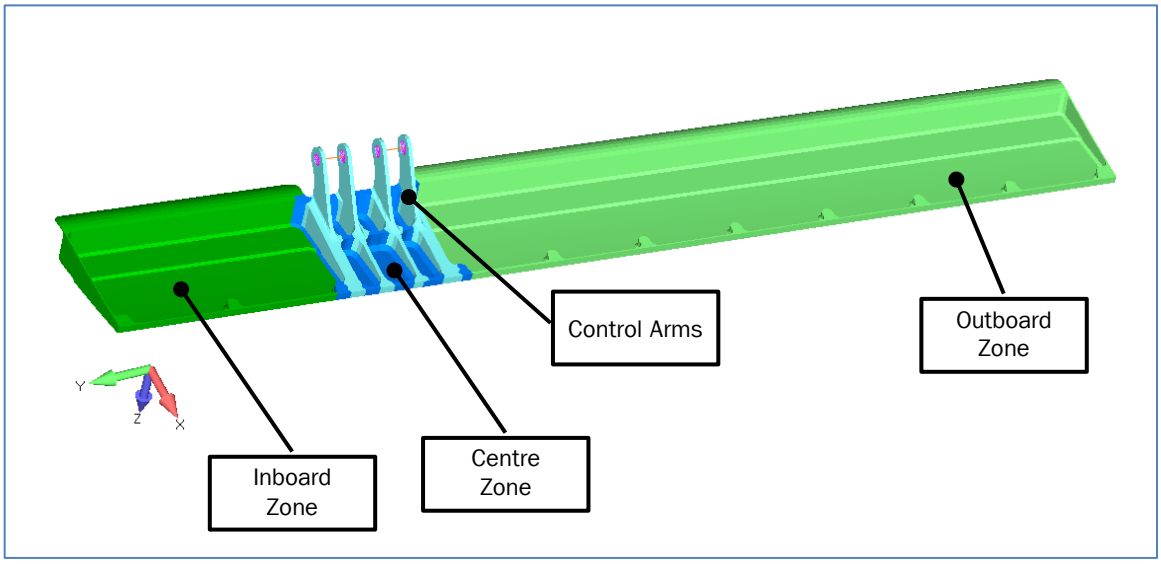

Figure 2-122 Trim tab body FEM "stress" zones.

Tension allowables
All applied tension stresses are compared against Ftu.

Ftu = 448 MPa 2124 T851 A basis

As the trim tab body has limited load path redundancy[43] , A basis strength allowables have been used.
Inherent in the design are "solid" block to thin skin transitions. For these Kt regions the ultimate peak FEM stress is corrected using a Neuber approach (see Appendix L).

Compression Allowables
The allowable for compression stresses is dependent on the location within the trim tab and if the location can be considered as a compact section. The critical flange is the aft "lip"

The maximum flange "b/t" = 5.2/0.8 = 6.5

b/t < 7.0[44] , therefore the flanges can be considered as a compact sections.
To supplement the above rational a FE linear buckling analysis has been performed on three critical load cases; results are presented in section 2.5.14.3.1.2.

[43] The control arms are an exception.
[44] PSM 5.34.3.1, Introduction

Strength Summary Tables

An overall summary of ultimate & limit strength RF's is presented in Table 2-217. Summaries of applied stress, allowables and RF's for individual "stress zones" follows in Table 2-222 to Table 2-225.

	ULTIMATE STRESS LEVELS							LIMIT STRESS LEVELS						
Load	Zone Minimum RF				Min of Min RF			Zone Minimum RF				Min of Min RF		
Case	Inboard	Centre	Lug Arms	Outboard	Value	Allow	Location	Inboard	Centre	Lug Arms	Outboard	Value	Allow	Location
1541	-	-	1.11	-	1.11	Fcu =Ftu	Lug Arms	-	-	1.11	-	1.11	Fty	Lug Arms
1542	-	-	5.49	-	5.49	Fcu =Ftu	Lug Arms	-	-	5.49	-	5.49	Fty	Lug Arms
1543	-	-	5.99	-	5.99	Ftu	Lug Arms	-	-	5.99	-	5.99	Fty	Lug Arms
3003	5.08	1.08	1.75	1.11	1.08	Fcu =Ftu	Centre	6.65	1.01	1.75	1.03	1.01	Fty	Centre
3013	7.68	1.17	2.62	1.18	1.17	Fcu =Ftu	Centre	6.69	1.01	2.62	1.04	1.01	Fty	Centre
3541	-	-	1.10	-	1.10	Fcu =Ftu	Lug Arms	-	-	1.10	-	1.10	Fty	Lug Arms
3542	-	-	5.09	-	5.09	Fcu =Ftu	Lug Arms	-	-	5.09	-	5.09	Fty	Lug Arms
3543	-	-	6.36	-	6.36	Ftu	Lug Arms	-	-	6.36	-	6.36	Fty	Lug Arms
5005	5.97	1.08	1.97	1.10	1.08	VM[Ftu]	Centre	7.80	1.05	1.97	1.19	1.05	Fty	Centre
5015	9.02	1.10	2.95	1.36	1.10	Ftu	Centre	7.86	1.05	2.95	1.20	1.05	Fty	Centre
6541	-	-	1.04	-	1.04	Ftu	Lug Arms	-	-	1.04	-	1.04	Fty	Lug Arms
6542	-	-	4.97	-	4.97	Fcu =Ftu	Lug Arms	-	-	4.97	-	4.97	Fty	Lug Arms
6543	-	-	6.63	-	6.63	Fcu =Ftu	Lug Arms	-	-	6.63	-	6.63	Fty	Lug Arms

Table 2-217 Summary of trim tab machined body strength RF's

Ultimate Strength RF

Critical Stress Zone: Lug arms stress zone see Table 2-224
Applied ultimate stress: 429. MPa
Allowable stress: Ftu 448. MPa "Kt" zone, Fcu = Ftu
Location: see Figure 2-125
Critical case: 6541 **Critical RF = 1.04**

Limit Strength RF

Critical Stress Zone: Centre stress zone see Table 2-219
Applied ultimate stress: 381.9 MPa von Mises with Neuber correction[45]
Allowable stress: 386. MPa Fty yield stress
Location: see Figure 2-141
Critical case: 3003 **Critical RF = 1.01**

Yielding in a localized zone due to a (high) Kt has occurred. This localized yielding is not detrimental to the operation of the trim tab.

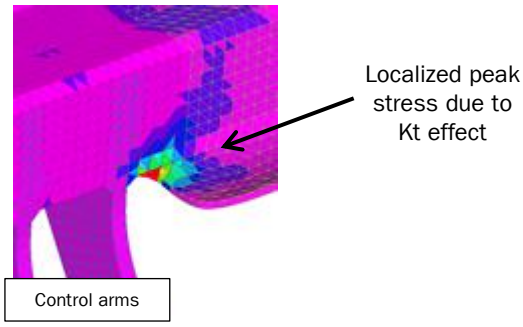

[45] See Appendix L for example

Limit Strength Summary Tables
For definition of stress zones see Figure 2-122
Inboard Stress Zone

Load Case	LIMIT STRESS LEVELS											
	Surface von Mises Stress (TRIA)						Interior Von-Mises Stress (CTET)					
	FEM	Neuber	Analysis	Allow		RF	FEM	Neuber	Analysis	Allow		RF
	MPa				MPa		MPa				MPa	
1541	-	-	-	-	-	-	-	-	-	-	-	-
1542	-	-	-	-	-	-	-	-	-	-	-	-
1543	-	-	-	-	-	-	-	-	-	-	-	-
3003	58.1	57.1	58.1	Fty	386.0	6.65	50.2	-	50.2	[Fty,Fcy]min	386.0	7.69
3013	57.7	57.1	57.7	Fty	386.0	6.69	50.3	-	50.3	[Fty,Fcy]min	386.0	7.68
3541	-	-	-	-	-	-	-	-	-	-	-	-
3542	-	-	-	-	-	-	-	-	-	-	-	-
3543	-	-	-	-	-	-	-	-	-	-	-	-
5005	49.5	49.3	49.5	Fty	386.0	7.80	42.8	-	42.8	[Fty,Fcy]min	386.0	9.01
5015	49.1	48.2	49.1	Fty	386.0	7.86	42.9	-	42.9	[Fty,Fcy]min	386.0	9.00
6541	-	-	-	-	-	-	-	-	-	-	-	-
6542	-	-	-	-	-	-	-	-	-	-	-	-
6543	-	-	-	-	-	-	-	-	-	-	-	-

Table 2-218 Summary of limit RF's for trim tab inboard stress zone.

Applied limit stress: 58.1 MPa von Mises
Allowable stress: 386. MPa compact section Fty
Location: as ultimate see Figure 2-123
Critical case: 3003 **Critical RF = > 2.00**

Centre Stress Zone
For definition of stress zones see Figure 2-122

Load Case	LIMIT STRESS LEVELS											
	Surface von Mises Stress (TRIA)						Interior Von-Mises Stress (CTET)					
	FEM	Neuber	Analysis	Allow		RF	FEM	Neuber	Analysis	Allow		RF
	MPa				MPa		MPa				MPa	
1541	-	-	-	-	-	-	-	-	-	-	-	-
1542	-	-	-	-	-	-	-	-	-	-	-	-
1543	-	-	-	-	-	-	-	-	-	-	-	-
3003	457.1	381.9	381.9	Fty	386.0	1.01	312.9	-	312.9	[Fty,Fcy]min	386.0	1.23
3013	462.0	383.0	383.0	Fty	386.0	1.01	317.1	-	317.1	[Fty,Fcy]min	386.0	1.22
3541	-	-	-	-	-	-	-	-	-	-	-	-
3542	-	-	-	-	-	-	-	-	-	-	-	-
3543	-	-	-	-	-	-	-	-	-	-	-	-
5005	406.0	366.2	366.2	Fty	386.0	1.05	277.7	-	277.7	[Fty,Fcy]min	386.0	1.39
5015	410.4	367.4	367.4	Fty	386.0	1.05	281.5	-	281.5	[Fty,Fcy]min	386.0	1.37
6541	-	-	-	-	-	-	-	-	-	-	-	-
6542	-	-	-	-	-	-	-	-	-	-	-	-
6543	-	-	-	-	-	-	-	-	-	-	-	-

Table 2-219 Summary of limit RF's for trim tab centre stress zone.

Applied limit stress: 381.9 MPa von Mises with Neuber correction[46]
Allowable stress: 386.0 MPa compact section Fty
Location: see Figure 2-124
Critical case: 3003 **Critical RF = 1.01**

Peak limit stress occurs at the same position as the peak ultimate stress. As can be observed in Figure 2-124, the critical zone is at a point where multiple fillet/blend radii occur. Plastification of this zone will not cause detrimental operation of the trim tab.

[46] See Appendix L for example

Lug Arms Stress Zone

Load Case	LIMIT STRESS LEVELS											
	Surface von Mises Stress (TRIA)						Interior Von-Mises Stress (CTET)					
	FEM	Neuber	Analysis	Allow		RF	FEM	Neuber	Analysis	Allow		RF
	MPa				MPa		MPa				MPa	
1541	405.4	366.2	366.2	Fty	386.0	999.00	354.7	-	3038.4	[Fty,Fcy]min	386.0	999.00
1542	57.9	57.1	57.9	Fty	386.0	999.00	50.7	-	434.1	[Fty,Fcy]min	386.0	999.00
1543	73.0	72.8	73.0	Fty	386.0	999.00	62.2	-	446.2	[Fty,Fcy]min	386.0	999.00
3003	165.5	164.6	165.5	Fty	386.0	6.65	153.1	-	50.2	[Fty,Fcy]min	386.0	7.69
3013	162.7	162.4	162.7	Fty	386.0	6.69	155.6	-	50.3	[Fty,Fcy]min	386.0	7.68
3541	432.8	375.2	375.2	Fty	386.0	999.00	370.0	-	3237.9	[Fty,Fcy]min	386.0	999.00
3542	61.8	61.6	61.8	Fty	386.0	999.00	52.9	-	462.6	[Fty,Fcy]min	386.0	999.00
3543	75.7	75.0	75.7	Fty	386.0	999.00	65.2	-	479.0	[Fty,Fcy]min	386.0	999.00
5005	147.4	146.7	147.4	Fty	386.0	7.80	135.9	-	42.8	[Fty,Fcy]min	386.0	9.01
5015	144.9	144.5	144.9	Fty	386.0	7.86	138.2	-	42.9	[Fty,Fcy]min	386.0	9.00
6541	437.7	376.3	376.3	Fty	386.0	999.00	370.8	-	3232.2	[Fty,Fcy]min	386.0	999.00
6542	62.5	61.6	62.5	Fty	386.0	999.00	53.0	-	461.7	[Fty,Fcy]min	386.0	999.00
6543	77.0	76.2	77.0	Fty	386.0	999.00	64.7	-	481.5	[Fty,Fcy]min	386.0	999.00

Table 2-220 Summary of limit RF's for trim tab lug arms stress zone.

Applied ultimate stress: 165.5 MPa von Mises
Allowable stress: 386. MPa compact section Fty
Location: as ultimate see Figure 2-125
Critical case: 3003 **Critical RF = > 2.00**

Outboard Stress Zone

Load Case	LIMIT STRESS LEVELS											
	Surface von Mises Stress (TRIA)						Interior Von-Mises Stress (CTET)					
	FEM	Neuber	Analysis	Allow		RF	FEM	Neuber	Analysis	Allow		RF
	MPa				MPa		MPa				MPa	
1541	-	-	-	-	-	-	-	-	-	-	-	-
1542	-	-	-	-	-	-	-	-	-	-	-	-
1543	-	-	-	-	-	-	-	-	-	-	-	-
3003	373.3	351.7	373.3	Fty	386.0	6.65	311.2	-	50.2	[Fty,Fcy]min	386.0	7.69
3013	371.7	351.7	371.7	Fty	386.0	6.69	309.5	-	50.3	[Fty,Fcy]min	386.0	7.68
3541	-	-	-	-	-	-	-	-	-	-	-	-
3542	-	-	-	-	-	-	-	-	-	-	-	-
3543	-	-	-	-	-	-	-	-	-	-	-	-
5005	324.3	319.2	324.3	Fty	386.0	7.80	270.6	-	42.8	[Fty,Fcy]min	386.0	9.01
5015	322.9	318.1	322.9	Fty	386.0	7.86	269.0	-	42.9	[Fty,Fcy]min	386.0	9.00
6541	-	-	-	-	-	-	-	-	-	-	-	-
6542	-	-	-	-	-	-	-	-	-	-	-	-
6543	-	-	-	-	-	-	-	-	-	-	-	-

Table 2-221 Summary of limit RF's for trim tab outboard stress zone.

Applied ultimate stress: 373.7 MPa von Mises
Allowable stress: 386.0. MPa compact section Fty
Location: as ultimate, see Figure 2-125
Critical case: 3003

Critical RF = > 2.00

Ultimate Strength Summary Tables
Inboard Stress Zone
For definition of stress zones see Figure 2-122

	ULTIMATE STRESS LEVELS																	
Load	Surface Max Pincipal Stress (TRIA)						Surface Min Pincipal Stress (TRIA)						Interior Von-Mises Stress (CTET)					
Case	FEM	Neuber	Analysis	Allow		RF	FEM	Neuber	Analysis	Allow		RF	FEM	Neuber	Analysis	Allow		RF
	MPa				MPa		MPa				MPa		MPa				MPa	
1541	-	-	-	-	-	-	-	-	-	-	-	-	-	-	-	-	-	-
1542	-	-	-	-	-	-	-	-	-	-	-	-	-	-	-	-	-	-
1543	-	-	-	-	-	-	-	-	-	-	-	-	-	-	-	-	-	-
3003	34.9	34.7	34.9	Ftu	448.0	12.85	-88.1	-87.4	-88.1	Fcu =Ftu	448.0	5.08	75.3	75.0	75.3	VM[Ftu]	448.0	5.95
3013	21.1	20.2	21.1	Ftu	448.0	21.28	-58.3	-58.2	-58.3	Fcu =Ftu	448.0	7.68	50.3	49.3	50.3	VM[Ftu]	448.0	8.91
3541	-	-	-	-	-	-	-	-	-	-	-	-	-	-	-	-	-	-
3542	-	-	-	-	-	-	-	-	-	-	-	-	-	-	-	-	-	-
3543	-	-	-	-	-	-	-	-	-	-	-	-	-	-	-	-	-	-
5005	75.1	75.0	75.1	Ftu	448.0	5.97	-30.3	-30.2	-30.3	Fcu =Ftu	448.0	14.79	64.3	63.8	64.3	VM[Ftu]	448.0	6.97
5015	49.7	49.3	49.7	Ftu	448.0	9.02	-18.2	-17.9	-18.2	Fcu =Ftu	448.0	24.61	42.9	42.6	42.9	VM[Ftu]	448.0	10.45
6541	-	-	-	-	-	-	-	-	-	-	-	-	-	-	-	-	-	-
6542	-	-	-	-	-	-	-	-	-	-	-	-	-	-	-	-	-	-
6543	-	-	-	-	-	-	-	-	-	-	-	-	-	-	-	-	-	-

Table 2-222 Summary of ultimate RF's for trim tab inboard stress zone.

Applied ultimate stress: = -88.1 MPa
Allowable stress: = 448. MPa compact section Fcu = Ftu
Location: see Figure 2-123
Critical case: 3003 **Critical RF = >2.00**

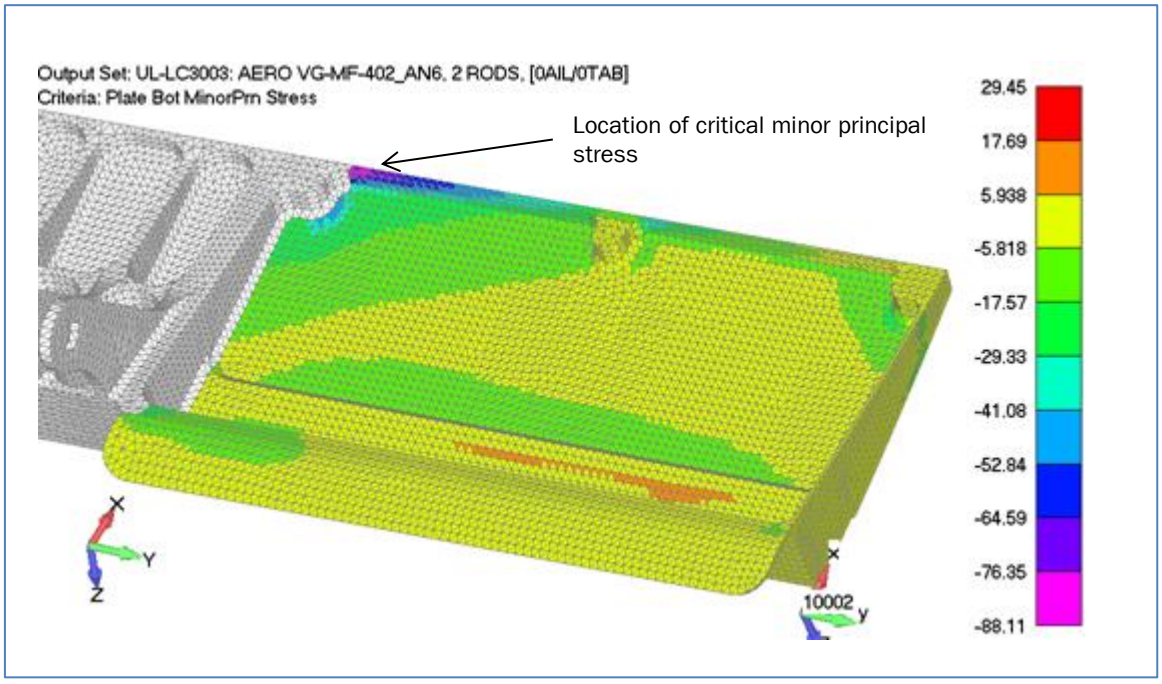

Figure 2-123 Trim tab inboard zone, surface ultimate stress levels: minor principal stress.

Centre Stress Zone

For definition of stress zones see Figure 2-122

Load Case	ULTIMATE STRESS LEVELS																	
	Surface Max Pincipal Stress (TRIA)						Surface Min Pincipal Stress (TRIA)						Interior Von-Mises Stress (CTET)					
	FEM	Neuber	Analysis	Allow		RF	FEM	Neuber	Analysis	Allow		RF	FEM	Neuber	Analysis	Allow		RF
	MPa				MPa		MPa				MPa		MPa				MPa	
1541	-	-	-	-	-	-	-	-	-	-	-	-	-	-	-	-	-	-
1542	-	-	-	-	-	-	-	-	-	-	-	-	-	-	-	-	-	-
1543	-	-	-	-	-	-	-	-	-	-	-	-	-	-	-	-	-	-
3003	412.7	374.1	412.7	Ftu	448.0	1.09	-678.7	-415.5	-415.5	Fcu =Ftu	448.0	1.08	469.3	389.8	389.8	VM[Ftu]	448.0	1.15
3013	281.5	281.1	281.5	Ftu	448.0	1.59	-458.7	-381.9	-381.9	Fcu =Ftu	448.0	1.17	317.1	314.7	317.1	VM[Ftu]	448.0	1.41
3541	-	-	-	-	-	-	-	-	-	-	-	-	-	-	-	-	-	-
3542	-	-	-	-	-	-	-	-	-	-	-	-	-	-	-	-	-	-
3543	-	-	-	-	-	-	-	-	-	-	-	-	-	-	-	-	-	-
5005	602.4	409.9	409.9	Ftu	448.0	1.09	-366.6	-348.3	-366.6	Fcu =Ftu	448.0	1.22	416.5	375.2	416.5	VM[Ftu]	448.0	1.08
5015	407.1	371.8	407.1	Ftu	448.0	1.10	-250.1	-249.8	-250.1	Fcu =Ftu	448.0	1.79	281.5	281.1	281.5	VM[Ftu]	448.0	1.59
6541	-	-	-	-	-	-	-	-	-	-	-	-	-	-	-	-	-	-
6542	-	-	-	-	-	-	-	-	-	-	-	-	-	-	-	-	-	-
6543	-	-	-	-	-	-	-	-	-	-	-	-	-	-	-	-	-	-

Table 2-223 Summary of ultimate RF's for trim tab centre stress zone.

Applied ultimate stress:	= -415.5 MPa	with Neuber correction[47]
Allowable stress:	= 448. MPa	compact section Fcu = Ftu
Location:	see Figure 2-124	
Critical case:	3003	**Critical RF = 1.08**

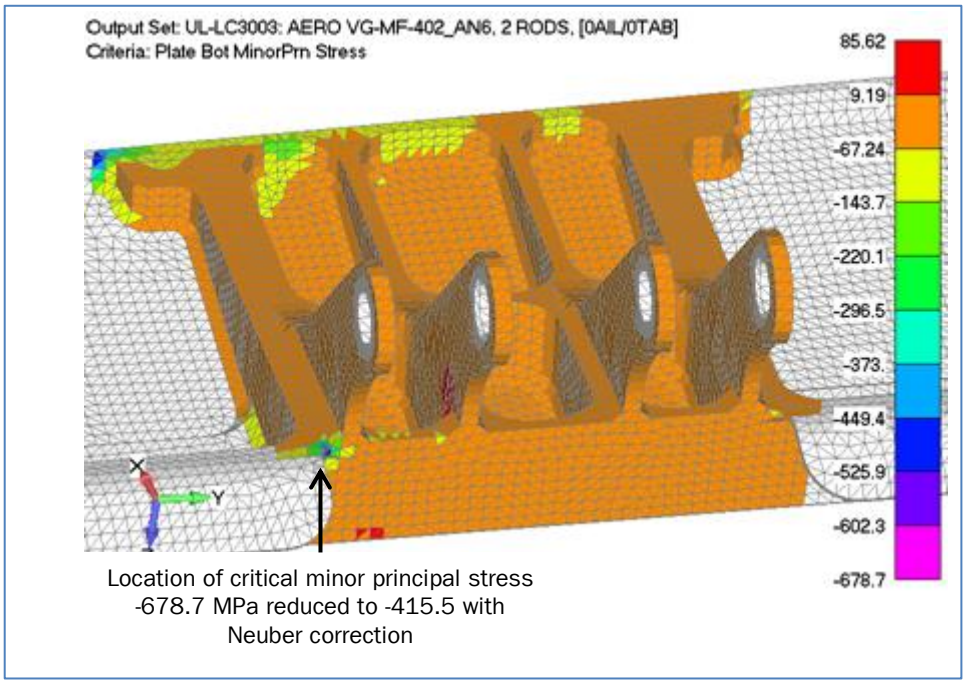

Figure 2-124 Trim tab centre zone, surface ultimate stress levels: minor principal stress.

[47] See Appendix L for example

Lug Arms Stress Zone

For definition of stress zones see Figure 2-122

Load Case	ULTIMATE STRESS LEVELS																	
	Surface Max Pincipal Stress (TRIA)						Surface Min Pincipal Stress (TRIA)						Interior Von-Mises Stress (CTET)					
	FEM	Neuber	Analysis	Allow		RF	FEM	Neuber	Analysis	Allow		RF	FEM	Neuber	Analysis	Allow		RF
		MPa			MPa			MPa			MPa			MPa			MPa	
1541	470.0	389.8	389.8	Ftu	448.0	1.15	-571.0	-402.1	-402.1	Fcu =Ftu	448.0	1.11	532.0	401.0	401.0	VM[Ftu]	448.0	1.12
1542	67.1	66.1	67.1	Ftu	448.0	6.67	-81.6	-80.6	-81.6	Fcu =Ftu	448.0	5.49	76.0	75.0	76.0	VM[Ftu]	448.0	5.89
1543	74.8	73.9	74.8	Ftu	448.0	5.99	-63.6	-62.7	-63.6	Fcu =Ftu	448.0	7.04	62.2	61.6	62.2	VM[Ftu]	448.0	7.21
3003	113.9	113.1	113.9	Ftu	448.0	3.93	-255.6	-255.4	-255.6	Fcu =Ftu	448.0	1.75	229.6	228.5	229.6	VM[Ftu]	448.0	1.95
3013	79.6	79.5	79.6	Ftu	448.0	5.63	-170.8	-170.2	-170.8	Fcu =Ftu	448.0	2.62	155.6	154.6	155.6	VM[Ftu]	448.0	2.88
3541	463.4	388.6	388.6	Ftu	448.0	1.15	-616.6	-408.8	-408.8	Fcu =Ftu	448.0	1.10	554.9	404.3	404.3	VM[Ftu]	448.0	1.11
3542	66.2	66.1	66.2	Ftu	448.0	6.77	-88.1	-87.4	-88.1	Fcu =Ftu	448.0	5.09	79.3	78.4	79.3	VM[Ftu]	448.0	5.65
3543	70.5	69.4	70.5	Ftu	448.0	6.36	-66.2	-66.1	-66.2	Fcu =Ftu	448.0	6.77	65.2	65.0	65.2	VM[Ftu]	448.0	6.87
5005	227.6	227.4	227.6	Ftu	448.0	1.97	-101.3	-100.8	-101.3	Fcu =Ftu	448.0	4.42	203.9	203.8	203.9	VM[Ftu]	448.0	2.20
5015	151.7	151.2	151.7	Ftu	448.0	2.95	-70.8	-70.6	-70.8	Fcu =Ftu	448.0	6.33	138.2	137.8	138.2	VM[Ftu]	448.0	3.24
6541	429.0	379.7	429.0	Ftu	448.0	1.04	-630.9	-409.9	-409.9	Fcu =Ftu	448.0	1.09	556.2	404.3	404.3	VM[Ftu]	448.0	1.11
6542	61.3	60.5	61.3	Ftu	448.0	7.31	-90.1	-89.6	-90.1	Fcu =Ftu	448.0	4.97	79.5	78.4	79.5	VM[Ftu]	448.0	5.64
6543	63.1	62.7	63.1	Ftu	448.0	7.10	-67.6	-67.2	-67.6	Fcu =Ftu	448.0	6.63	64.7	63.8	64.7	VM[Ftu]	448.0	6.92

Table 2-224 Summary of ultimate RF's for trim tab lug arms stress zone.

Applied ultimate stress:	429 MPa	with Neuber correction[48]
Allowable stress:	448. MPa	Tension, Ftu
Location:	see Figure 2-125	
Critical case:	6541	**Critical RF = 1.04**

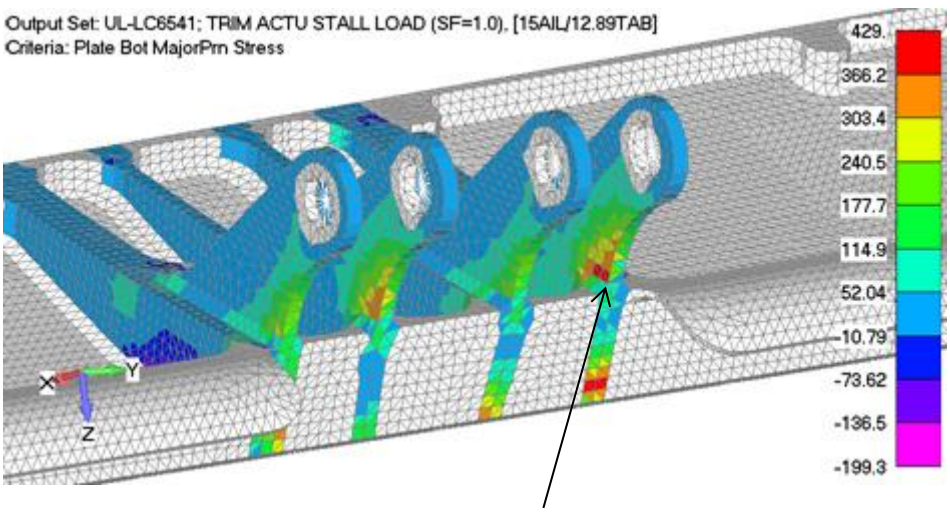

Location of critical max principal stress

Figure 2-125 Trim tab lug arms zone, surface ultimate stress levels: minor principal stress.

[48] See Appendix L for example

Outboard Stress Zone

For definition of stress zones see Figure 2-122

Load Case	ULTIMATE STRESS LEVELS																	
	Surface Max Pincipal Stress (TRIA)						Surface Min Pincipal Stress (TRIA)						Interior Von-Mises Stress (CTET)					
	FEM	Neuber	Analysis	Allow		RF	FEM	Neuber	Analysis	Allow		RF	FEM	Neuber	Analysis	Allow		RF
		MPa			MPa			MPa			MPa			MPa			MPa	
1541	-	-	-	-	-	-	-	-	-	-	-	-	-	-	-	-	-	-
1542	-	-	-	-	-	-	-	-	-	-	-	-	-	-	-	-	-	-
1543	-	-	-	-	-	-	-	-	-	-	-	-	-	-	-	-	-	-
3003	219.0	218.4	219.0	Ftu	448.0	2.05	-570.1	-402.1	-402.1	Fcu =Ftu	448.0	1.11	466.8	388.6	388.6	VM[Ftu]	448.0	1.15
3013	152.9	152.3	152.9	Ftu	448.0	2.93	-378.5	-355.0	-378.5	Fcu =Ftu	448.0	1.18	309.5	308.0	309.5	VM[Ftu]	448.0	1.45
3541	-	-	-	-	-	-	-	-	-	-	-	-	-	-	-	-	-	-
3542	-	-	-	-	-	-	-	-	-	-	-	-	-	-	-	-	-	-
3543	-	-	-	-	-	-	-	-	-	-	-	-	-	-	-	-	-	-
5005	495.3	394.2	394.2	Ftu	448.0	1.14	-194.2	-193.8	-194.2	Fcu =Ftu	448.0	2.31	405.8	371.8	405.8	VM[Ftu]	448.0	1.10
5015	328.8	325.9	328.8	Ftu	448.0	1.36	-135.6	-135.5	-135.6	Fcu =Ftu	448.0	3.30	269.0	268.8	269.0	VM[Ftu]	448.0	1.67
6541	-	-	-	-	-	-	-	-	-	-	-	-	-	-	-	-	-	-
6542	-	-	-	-	-	-	-	-	-	-	-	-	-	-	-	-	-	-
6543	-	-	-	-	-	-	-	-	-	-	-	-	-	-	-	-	-	-

Table 2-225 Summary of ultimate RF's for trim tab outboard stress zone.

Applied ultimate stress:	-402.1 MPa	with Neuber correction[49]
Allowable stress:	448. MPa	"Kt" zone, Fcu = Ftu
Location:	see Figure 2-125	
Critical case:	3003	
Comment	Critical position is where Neuber correction has been made.	

Critical RF = 1.11

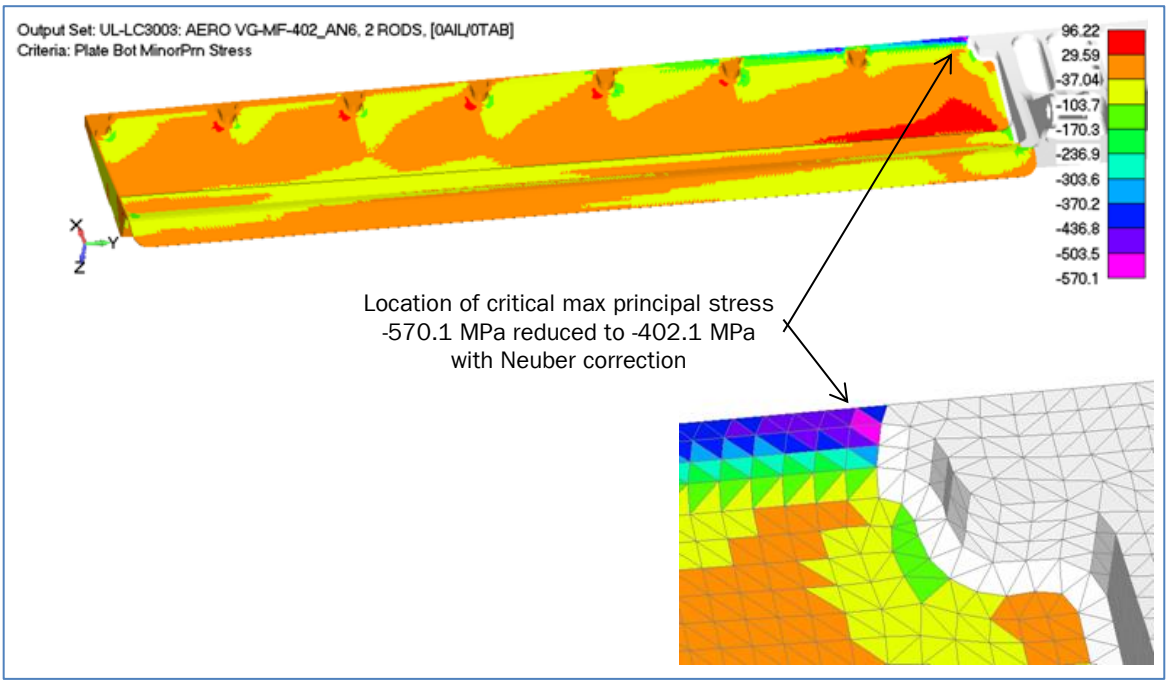

Figure 2-126 Trim tab outboard zone, surface ultimate stress levels: minor principal stress.

[49] See Appendix L for example

2.5.14.3.1.2 Trim Tab Body Body FE Linear Buckling Check

In addition to checking section compression stress levels; a FE linear buckling analysis has been performed. Boundary conditions and loading are as the static strength checks. I.e. extracted eigenvalues are relative to ultimate loads. From inspection of Table 2-222 to Table 2-225 , one critical load case with a high minor principal stress has been identified.
A summary is presented below and mode shapes in Figure 2-127 & Figure 2-127.

Buckling criteria: No buckling at < Ultimate Loads

FEM[11] primarily intended for static strength analysis. Mesh density combined with the use of CTET10 elements will result in over estimation of buckling eigenvalues. The analysis should be considered as a supplement/"safety check" of the local buckling allowable used in the previous section.

Load Case		Eigenvalue	RF
3003	ED1000002+VG-MF-003_A5 [0ail0tab]	1.2 (Figure 2 124)	1.20
3003	ED1000002+VG-MF-003_A5 [0ail0tab]	1.90 (Figure 2 125)	1.90

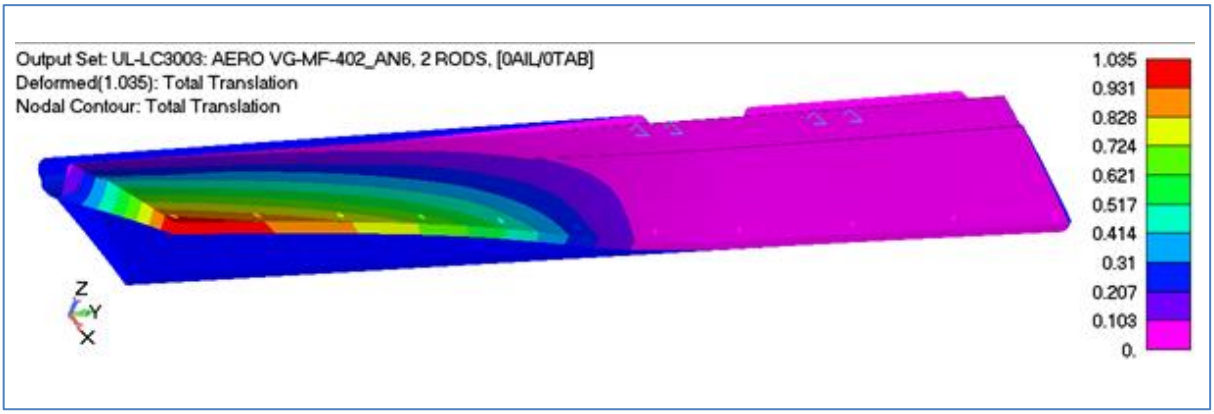

Figure 2-127 Trim tab body linear buckling 1st mode, critical ED + Aero case 3003.

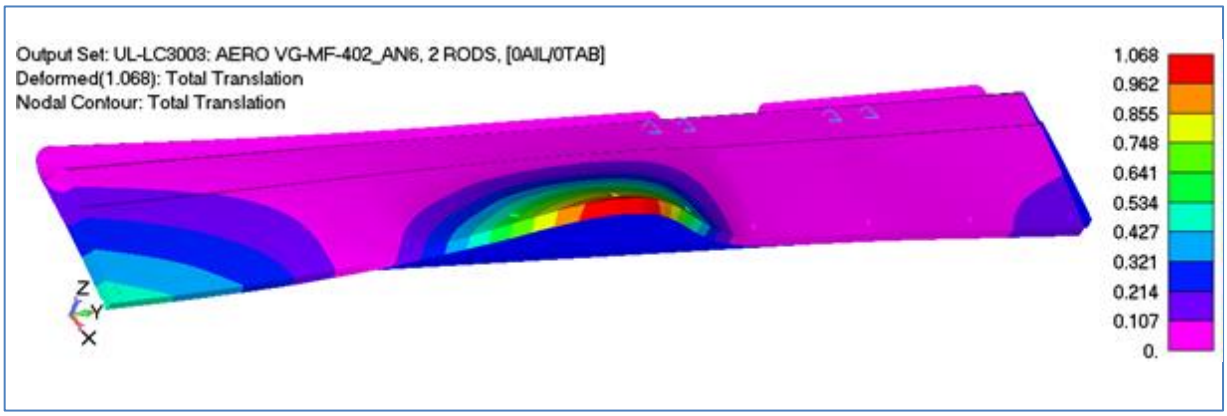

Figure 2-128 Trim tab body linear buckling 2nd mode, critical ED + Aero case 3003.

2.5.14.4 Trim Tab Control arms

The trim tab control arms are shown in Figure 2-129
The tab control arms are checked for the following:

- Arm to rod lug strength.
- Arm to rod pin strength.
- Arm section strength at root.

The control arms are subject to both intact and failsafe safe (one control rod failed) conditions. To simplify analysis of failed – un-failed load cases, A basis material properties have been used for all calculations/RF's.

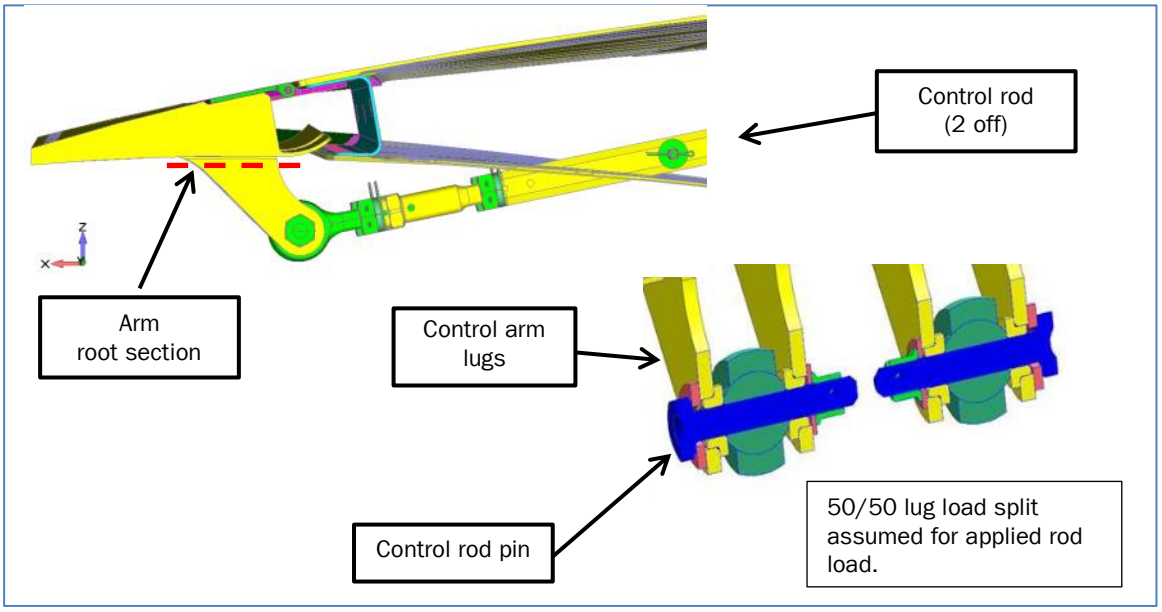

Figure 2-129 Arrangement of trim tab control arms and rods.

2.5.14.4.1 Lugs and Pins

The purpose of the tab control arm lugs is to transfer control rod loads into the tab body see Figure 2-71. The tab is controlled via two control rods and two lugs are employed for each rod. All four lugs have identical geometry.
To facilitate recovering lug loading from the DFEM a coordinate aligned to the lug axis has been created (CORD 1000); this coordinate system moves as the aileron and tab are rotated in to differing positions. Loading for the lugs is divided into two group

- Loading aerodynamic forces (aero surfaces loaded, control rods locked)
- Loading from the tab actuator (rods loaded, hinge locked)

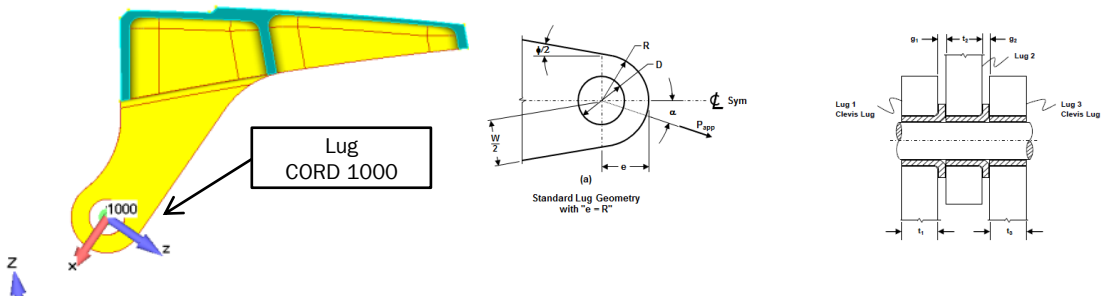

Lug Geometry	
D =	7.96 mm
DPO =	4.80 mm
t =	2.50 mm
e =	7.97 mm
R =	7.97 mm
W/2 =	7.97 mm
phi =	0.00 deg

Bush Geometry	
Di,bh =	4.82 mm
Do,bh =	7.96 mm

Pin Geometry	
Dia =	4.80 mm
t1 =	2.50 mm
g1 =	2.96 mm
t2 =	8.33 mm
g2 =	2.96 mm
t3 =	2.50 mm

Figure 2-130 Lug geometry and material details

The local coordinate system C1000 is defined in the “master” trim tab FEMAP FEM file [11]. It is linked to the trim tab coordinate C2710002, which in turn is linked to the aileron hinge coordinate C2710001. Therefore it will translate and rotate as the angular positions of both the tab and aileron change.

Lug analysis uses the PSM 5.3.11.4 Excel tool. This is an authorised/approved tool; hence no detailed worked example will be provided, only pertinent details.
The critical load case listed in the summary of reserve factors (Table 2-226) is 1541.

Summary of Lug Input – Output Data for Critical Case

Loading

Load Case	= 1541	Trim actuator stall load, 2 rods		
Safety Factor	= 1.50			
		Ult	Limit	
Axial Load	P_{ax} =	481.	321. N.	50/50 control rod load split
Transverse Load	P_{tr} =	1499..	999. N.	
Resultant Load	P_{app} =	1574.	1049. N	
Alpha =		72.2	72.2 deg.	

Lug RF Summary from PSM 5 3 11 4 01.xlsm

Failure mode	Applied [N.]	Allowable [N.]	RF
Tension strength ultimate , P_{tu}	1574.	5487.	3.03
Tension strength limit, P_{ty}	1049.	5200.	4.31
Lug net section tension strength limit, $P_{ty,ns}$	1049	7701.	6.38
Lug bearing strength limit, P_{bry}	1049	5506.	4.56
Bush bearing strength limit, P_{bry}	1049	21980.	18.22

Critical Case 1541
Failure mode Tension strength ultimate

RF = > 2.00
RF includes a Fitting Factor of 1.15

Worked Example for Critical Pin RF
For geometry see Figure 2-130
Calculate moment arms and section properties

$L_1 = \left\{\frac{t_1}{2} + g_1 + \frac{t_2}{4}\right\}$ = {2.50/2+2.96+8.33/4} = 6.29 mm Eq. 28

$L_2 = \left\{\frac{t_3}{2} + g_2 + \frac{t_2}{4}\right\}$ = {2.50/2+2.96+8.33/4} = 6.29 mm Eq. 29

$L_{s,1} = \left\{\frac{t_1}{2} + g_1\right\}$ = {2.50/2+2.96} = 4.21 mm

$L_{s,2} = \left\{\frac{t_3}{2} + g_2\right\}$ = {2.50/2+2.96} = 4.21 mm

$A = \frac{\pi \cdot D_{po}^2}{4}$ = Π*4.80^2/4 = 18.1 mm2 Eq. 49

$Z = \frac{\pi \cdot D_{po}^3}{32}$ = Π*4.80^3/32 = 10.9 mm3 Eq. 35

Calculate Pin Bending Moments and Shear Forces

Ultimate applied pin load = 3148 N.
Load case = 1541

$$M_{max,1} = \frac{(t_3 + 2g_2 + t_2)}{(t_1 + 2t_2 + t_3 + 2g_1 + 2g_2)} F L_1$$ Eq. 30

= (2.50+2*2.96+8.33)/(2.50+2*8.33+2.50+2*2.96+2*2.96)*3148*6.29 = 9896. N

$$M_{max,2} = \frac{(t_1 + 2g_1 + t_2)}{(t_1 + 2t_2 + t_3 + 2g_1 + 2g_2)} F L_2$$ Eq. 31

= (2.50+2*3+8.33)/(2.50+2*8.33++2*2.96+2*2.96)*3148*6.29 = 9896. N

M_{max} = 9896. N.

$$M_{s,1} = \frac{(t_3 + 2g_2 + t_2)}{(t_1 + 2t_2 + t_3 + 2g_1 + 2g_2)} F L_{s,1}$$ Eq. 41

= (2.50+2*2.96+8.33)/(2.50+2*8.33+2.50+2*2.96+2*2.96)*3148.*4.21 = 6618. N

$$M_{s,2} = \frac{(t_1 + 2g_1 + t_2)}{(t_1 + 2t_2 + t_3 + 2g_1 + 2g_2)} F L_{s,2}$$ Eq. 42

= (2.50+2*2.96+8.33)/(2.50+2*8.33+2.50+2*2.96+2*2.96)*3148*4.21 = 6618. N

M_{max} = 6618. N

$$F_{s,1} = \frac{(t_3 + 2g_2 + t_2)}{(t_1 + 2t_2 + t_3 + 2g_1 + 2g_2)} F$$ Eq. 45

= (2.50+2*2.96+8.33)/(2.50+2*8.33+2.50+2*2.96+2*2.96)*3148 = 1574. N.

$$F_{s,2} = \frac{(t_1 + 2g_1 + t_2)}{(t_1 + 2t_2 + t_3 + 2g_1 + 2g_2)} F$$ Eq. 46

= (2.50+2*2.96+8.33)/(2.50+2*8.33+2.50+2*2.96+2*2.96)*3148 = 1574. N.

Calculate Pin Stress Levels and RF's

With reference to PSM5.3.11.4-01 fig 12

At the position of maximum pin bending

Applied [MPa]	**Allowable [MPa]**	**RF**
$f_{b,max} = M_{max}/Z$ = 9896/10.9 = 911.	Ftu = 1103.	1103/(1.15*911) = 1.05

No plastic bending used.

At the position of maximum shear with bending

Applied [MPa]	**Allowable [MPa]**	**RF**
$f_{b,s} = M_s/Z$ = 6618/10.9 = 610.	Ftu = 1103.	1103/(1.15*610) = 1.57
$f_{s,avg} = F_s/A$ = 1574/18.1 = 87.	Fsu = 655.	655/(1.15*87) = 6.55

Interaction of shear and bending PSM 5.3.11.4, Eq.51 & 52

$$Q_b = \frac{f_{bu,s}}{F_{tu}} \quad \text{and} \quad Q_s = \frac{f_{su,avg}}{F_{su}}$$ Q_b = 610/1103 = 0.553 Q_s = 87/655 = 0.133

$$RF = \frac{1}{j\sqrt{Q_b^2 + Q_s^2}}$$ = 1/(1.15*SQRT(0.555^2 + 0.133^2)) RF = 1.53

Critical load case: 1541

Failure mode: Pin bending at maximum moment

Critical ultimate RF **RF = 1.05**

RF includes a Fitting Factor of 1.15

2.5.14.4.2 Section at Root of the Control Arms

Lug to control rod geometry is such that lug arms are subject to lateral loads. The critical section is shown in Figure 2-131. The arrangement of the bushes does not use “floating” elements. Hence both lug arms can react lateral loads; however both control arms are assumed to act independently.

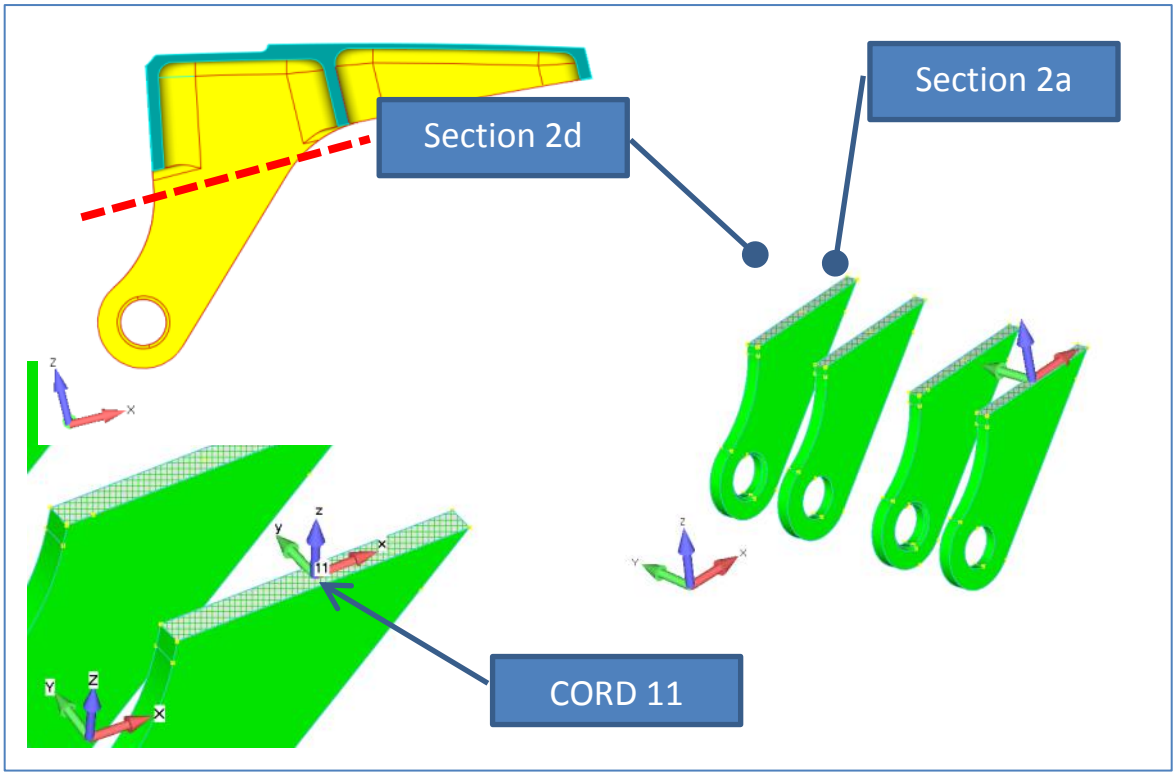

Figure 2-131 Root section geometry and material details

To facilitate recovering loading at the four sections, FEMAP “Free-bodies have been created in FEM [11] using local coordinate C11, see Figure 2-131. Coordinate C11 is linked to the trim tab coordinate C2710002, which in turn is linked to the aileron hinge coordinate C2710001. Therefore it will translate and rotate as the angular positions of both the tab and aileron change.
All four sections lie on a plane. By employing this method the load applied to the lug is transferred and aligned to the sections.
A RF is then determined by using simple engineering bending (no plastic bending).
As can be seen in Table 2-226 the

Critical RF/load case is 1.13/ LC1541, Trim Actuator stall load (SF=1.5), 2 Rods.

A worked example for this RF is provided below.

As the loading extracted from the DFEM is at each section CG and aligned to the section plane no further transformations are required.

Section Properties

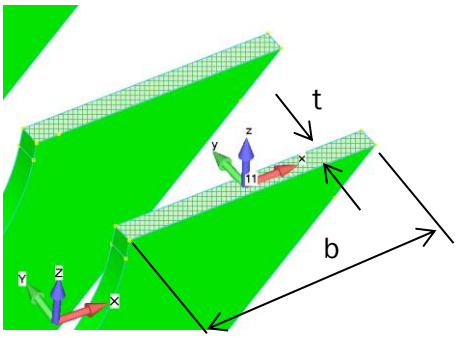

t = 2.5 mm
b = 27.5 mm

A = 2.5*27.5	= 68.8 mm^2
Iyy = 2.5*27.5^3/12	= 4328.3 mm^4
Ixx = 27.5*2.5^3	= 35.8 mm^4
ymax = 1.25 mm	
xmax = 13.75 mm	

Section Loading (LC1541)

Section	2a	2b	2c	2d	Units
Fx	-1401.4	-1396.6	-1396.1	-1402.0	N.
Fy	-24.7	-95.6	-13.3	-107.5	N.
Fz	722.4	719.4	719.8	722.1	N.
Mx	-428	-2089	-158	-2343	N. mm
My	48323	47942	47702	47706	N. mm
Mz	822	2314	574	2551	N. mm

Stress Component
From simple engineering considerations.

Section 2a

σ_{axial} = Fz/A	722.4/68.8	10.5 MPa
$\sigma_{b(xx)}$ = Mx*(y_{max})/I_{xx}	-428*1.25/35.8	± 14.9 MPa
$\sigma_{b(yy)}$ = My*(x_{max})/I_{yy}	48323*13.75/4328.3	± 153.5 MPa
τ = SQRT(F_x^2+F_y^2)/A	SQRT(1401^2+24.7^2)/68.8	20.4 MPa

Section 2b

σ_{axial} = Fz/A	719.4/68.8	10.5 MPa
$\sigma_{b(xx)}$ = Mx*(y_{max})/I_{xx}	-2089*1.25/35.8	± 72.9 MPa
$\sigma_{b(yy)}$ = My*(x_{max})/I_{yy}	47942*13.75/4328.3	± 152.3 MPa
τ = SQRT(F_x^2+F_y^2)/A	SQRT(1396^2+95.6^2)/68.8	20.4 MPa

Section 2c

σ_{axial} = Fz/A	719.8/68.8	10.5 MPa
$\sigma_{b(xx)}$ = Mx*(y_{max})/I_{xx}	-158*1.25/35.8	± 5.5 MPa
$\sigma_{b(yy)}$ = My*(x_{max})/I_{yy}	47702*13.75/4328.3	± 151.5 MPa
τ = SQRT(F_x^2+F_y^2)/A	SQRT(1396^2+13.3^2)/68.8	20.3 MPa

Section 2d

σ_{axial} = Fz/A	722.1/68.8	10.5 MPa
$\sigma_{b(xx)}$ = Mx*(y_{max})/I_{xx}	-2343*1.25/35.8	± 5.5 MPa
$\sigma_{b(yy)}$ = My*(x_{max})/I_{yy}	47706*13.75/4328.3	± 151.5 MPa
τ = SQRT(F_x^2+F_y^2)/A	SQRT(1402^2+107.5^2)/68.8	20.3 MPa

Hence

Section	2a	2b	2c	2d
σ_{axial} [MPa]	10.5	10.5	10.5	10.5
$\sigma_{b(xx)}$ [MPa]	14.9	72.9	5.5	81.7
$\sigma_{b(yy)}$ [MPa]	153.5	152.3	151.5	151.6
τ [MPa]	20.4	20.4	20.3	20.5

Direct Stress Levels

The critical direct stress will occur at one of the four corners
Critical Corner Stress = $[\sigma_{axial}]_{abs}+[\sigma_{b(xx)}]_{abs}+[\sigma_{b(yy)}]_{abs}$

Consider the sections as "compact" hence the direct stress allowable =Ftu

Section	2a	2b	2c	2d
Applied σ [MPa]	179.0	235.6	167.5	243.7
Allow (Ftu) [MPa]	448.0	448.0	448.0	448.0
RF	2.50	1.90	2.67	1.83

Critical RF = 1.83

Section	2a	2b	2c	2d
Applied τ [MPa]	20.4	20.4	20.3	20.5
Allow (Fsu) [MPa]	262.0	262.0	262.0	262.0
RF	12.84	12.86	12.89	12.80

Critical RF = 12.80

RF's for all other cases are presented in Table 2-226.

<u>Summary of RF's for the Trim Tab Control Arms</u>

Load Case	Reserve Factors			
	Lug Strength	Pin Bending	Strength at Root	
			Direct σ	Shear τ
1541	3.03	1.05	1.83	12.80
1542	21.22	7.37	12.86	89.64
1543	15.92	5.52	10.71	67.33
3003	32.10	981.09	20.76	121.32
3013	46.76	16.17	35.97	179.77
3541	3.10	1.05	1.94	11.67
3542	21.69	7.37	13.62	81.72
3543	15.97	5.53	11.48	61.37
5005	36.02	1484.21	24.43	136.15
5015	53.49	18.50	43.35	205.66
6541	3.17	1.05	2.18	11.39
6542	22.18	7.37	15.28	79.76
6543	15.97	5.53	13.06	59.89
Min =	3.03	1.05	1.83	11.39
Case =	1541	1541	1541	6541

Table 2-226 Control arm critical RF's.

2.5.14.5 Piano hinge

The trim tab is attached to the aileron body via a piano hinge see fig Figure 2-132.
The following strength checks are made.

- Piano half hinge tang strength analysed as an idealized lug
- Piano hinge bearing strength analysed as an idealized lug
- Pin shear strength
- Piano half hinge bending strength at fastener line.

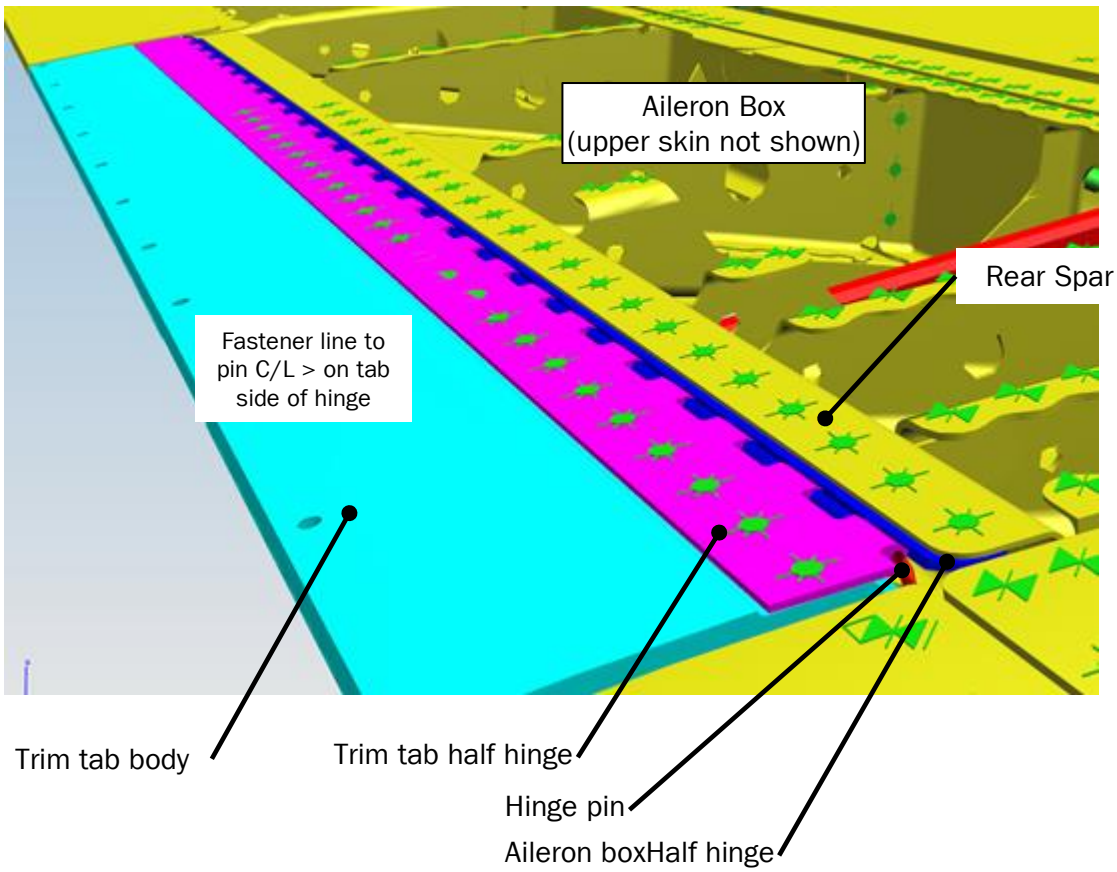

Figure 2-132 Trim tab piano hinge.

Lateral loads along pin axis are reacted in the DFEM at a single “tang”. The load value is low and has been neglected.

Representation of the Piano Hinge in FEM [11]

The hinge is not directly represented. It consists as a set of REB3/SPC's. The representation is shown pictorially in Figure 2-133. The elements/grid Id's are organised in a logical manner as follows:

Hinge line grid Id's	G501 – G552	Even grids = aileron side Odd grids = tab side

The tab half hinge is represented by a set of RBE3 elements.

Elements Id's	E601 – E626	Dependent grids set DOF 13 (i.e. floating axially) Independent grids set DOF 123 (CORD 10002)
An exception is	E608	Dependent grids set DOF 123 Independent grids set DOF 123 (CORD 10002)

This element locates and reacts all hinge "axial" Fy loads.

The hinge pin is represented by a set of beam elements.

Element Id's	E501 - E551	The length of each beam elements is 1 tang width.

The aileron half hinge is represented by a SPC set (even grids) with DOF 123

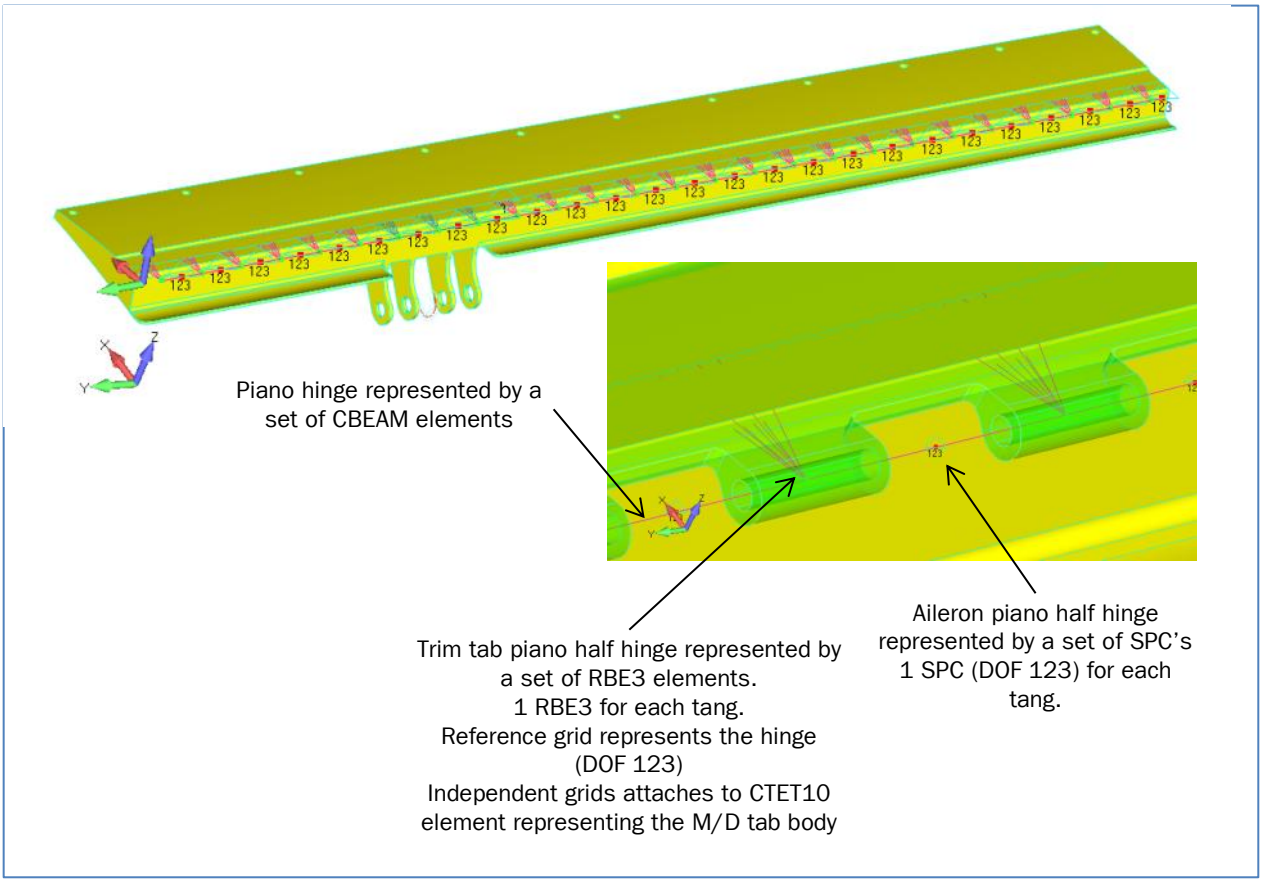

Figure 2-133 Trim tab piano hinge modelling details for FEM [11]

Piano Hinge Loading Loading

The hinge loading is extracted from FEM [11] results via

FEMAP tool, List: *Output Results to Data Table.*

MPC Data for G501 to G552 is recover in the hinge coordinate system C10002

Load component T1 Tang "lug" axial load.
Load component T3 Tang "lug" transverse load.

Calculation file [13] then processes the data to find max, min & max_{abs} tang loading. A summary of critical tang loads is given in the table below.

Load	Max $T1_{abs}$					Max $T2_{abs}$					Max $T3_{abs}$				
Case	+ve value	El	-ve value	El	Max_{abs}	+ve value	El	-ve value	El	Max_{abs}	+ve value	El	-ve value	El	Max_{abs}
3003	320.1	519	-108.3	503	320.1	11.6	515	0.0	517	11.6	133.8	513	-261.2	517	261.2
3013	202.2	519	-68.1	503	202.2	7.8	515	0.0	513	7.8	54.3	513	-152.9	519	152.9
5005	98.1	503	-277.2	519	277.2	0.0	519	-10.2	515	10.2	233.7	517	-114.3	513	233.7
5015	61.7	503	-174.9	519	174.9	0.0	517	-6.8	515	6.8	136.0	519	-45.1	513	136.0

Table 2-227 Piano hinge, summary if critical tang loading components.

Conservatively axial and transverse loading has been enveloped and all components are abs values.
i.e. Max lug axial $MPC(T1)_{abs}$ has been combined with Max lug transverse $MPC(T3)_{abs}$

Loading from case 3003 has been "pictorially plotted" in Figure 2-134. The hinge tang loading is at a maximum in the zone of the control rod lugs.

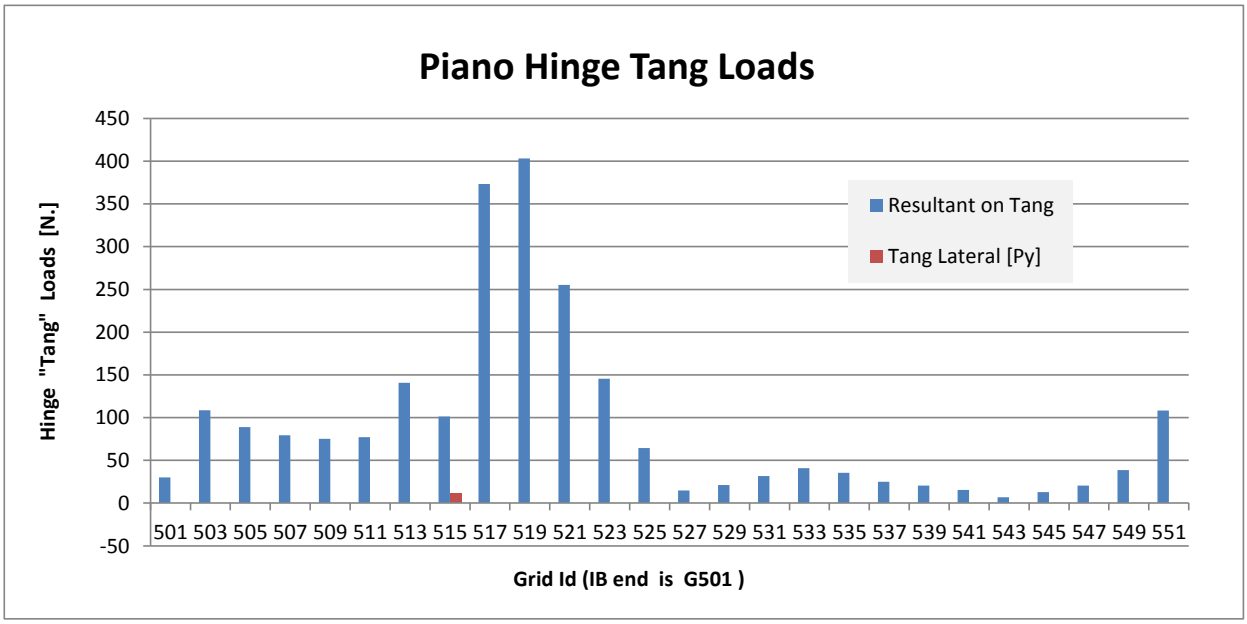

Figure 2-134 Trim tab piano hinge, graphic representation of loading.

A summary of lug and pin ultimate RF's is presented in Table 2-228.

LC	Ultimate Reserve Factors				
	Lug Strg	Lug Bearing	Pin Shear	Tang root	Fastener line
3003	9.27	12.21	15.94	1.83	1.04
3013	13.83	19.89	25.98	3.10	1.97
5005	10.54	13.91	18.16	2.05	1.16
5015	15.83	22.77	29.73	3.50	2.23
Min =	9.27	12.21	15.94	1.83	1.04
Case =	3003	3003	3003	3003	3003

Table 2-228 Piano hinge, summary of RF's

Critical Load Case: 3003
Failure mode: Half hinge bending at fastener line
(worked example page 338) **RF = 1.04**

<u>CS 23.657 Requirement Ult Bearing RF >6.67</u>
Critical Load Case: 3003
Failure Mode: Ultimate bearing
Ultimate RF: 12.21

Meets Requirement, RF > 6.67

Worked examples for the critical cases / strength checks follow

Analysis of Halt Hinge Tangs

Each piano hinge tang is idealized as consisting of two “lugs” as shown Figure 2-135.

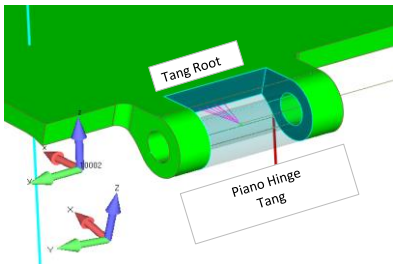

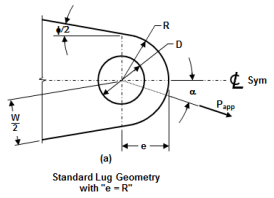

Analysis lug t = 2* idealized lug t
i.e. 3.15 + 3.15 = 6.30 mm

Lug Geometry		
D =	2.36	mm
DPO =	2.28	mm
t =	6.30	mm
e =	2.29	mm
R =	2.29	mm
W/2 =	2.29	mm
phi =	0.00	deg
Bush Geometry		
Di,bh =	2.28	mm
Do,bh =	-	mm

Figure 2-135 Piano hinge tangs, idealized as two lugs.

The analysis for the “lugs” is carried out by PSM 5 3 11 4_01.xlsm. This is an approve tool for use on the PC-24 project; as such a fully detailed worked example is not required. However for the critical case all input data is presented to enable independent verification.
Material strength data is given below and dimensional data in Figure 2-135.

Lug Material

Material	= 7075-T73511
Basis	= B
Ftu	= 483.0 MPa
Fty	= 407.0 MPa
Fcy	= 421.0 MPa
Fbry15	= 579.0 MPa
Fbru15	= 724.0 MPa
Fbry20	= 703.0 MPa
Fbru20	= 945.0 MPa

Pin Material

Material	= 17-7 PH con C
Basis	= S
Ftu	= 1262.0 MPa
Fsu	= 807.0 MPa

Bush Material
No bushes

Summary of Lug Input – Output Data for Critical Case

Loading Load Case = 3002
Safety Factor = 1.50

		Ult	Limit	
Axial Load	P_{ax} =	320. .	213. N.	(Table 2-227)
Transverse Load	P_{tr} =	261.	174. N.	(Table 2-227)
Resultant Load	P_{app} =	413.	275. N	
Alpha =		39.2	39.2 deg.	

Lug RF Summary from PSM 5 3 11 4 01.xlsm

Failure mode	Applied [N.]	Allowable [N.]	RF
Tension strength ultimate , P_{tu}	413.	4404.	9.27
Tension strength limit, P_{ty}	275	4083.	12.89
Lug net section tension strength limit, $P_{ty,ns}$	275	5672.	17.91
Lug bearing strength limit, P_{bry}	275	4034.	12.74
Bush bearing strength limit, P_{bry}		N/A.	N/A

Failure mode = Tension strength ultimate **RF = 9.27**
RF includes a Fitting Factor of 1.15

CS 23.657 (Ult bearing RF >6.67)
The bearing allowable given by PSM 5 3 11 4-01.xlsm is relative to limit load.

Limit bearing strength RF = 12.74

An ultimate RF will be determined as follows:
Ultimate bearing allowable = Fbru/Fbry*limit allow

Fbru(e/D=1.5)/Fbrz(e/D=1.5)	= 703/579	= 1.25	(Alu. 7075 T73511)
Fbru(e/D=2.0)/Fbrz(e/D=2.0)	= 945/703	= 1.34	(Alu. 7075 T73511)

Hence, ultimate bearing strength = 1.25*4034. = 5045. N.

RF = ult allow/ult applied = 5045/413 **RF = 12.21**
Requirement exceeded

Pin Shear Strength

From the close arrangement of tangs it is assume the pin shear rather than pin bending is critical. Shear strength is calculated using an average applied shear stress.

Geometry and Materials

Material:	17-7 PH cond C	Ftu = 1262. MPa	Fsu = 807. MPa (B basis)
Dia:		2.28 mm	
Area:	$\Pi*D^2/4$	4.08 mm^2	
Section modulus Z	$\Pi*D^3/32$	1.17 mm^3	

Ultimate Loading (Table 2-227)

LC	$Max(Pax)_{abs}$	$Max(Ptr)_{abs}$	P_{res}
3003	320.1	261.2	413.2 N.
3013	202.2	152.9	253.5 N.

5005	277.2	233.7	362.6 N.
5015	174.9	136.0	221.5 N.
Critical = 3003			

Calculate average shear stress, pin is in double shear.

τ = Pres/(2*A) 413.2/(2*4.08) = 50.6 MPa

RF = Fsu/τ 807./50.6 **RF = >2.00**

Bending of the Half Hinge at the Fastener Line

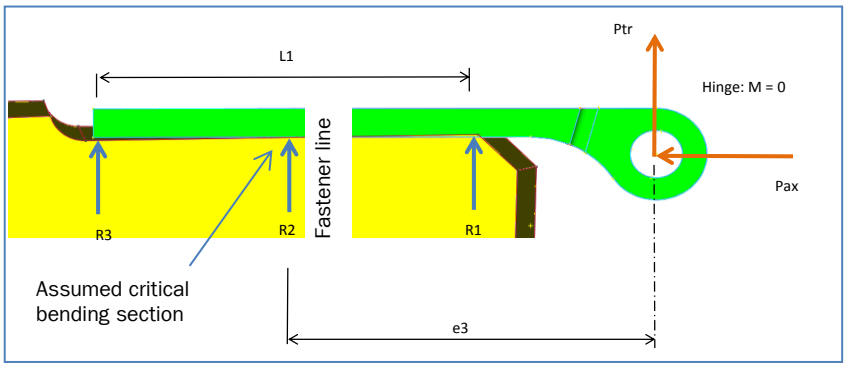

Conservatively assume all applied loading is reacted by R2 & R3 irrespective of load directions. i.e. ignore any benefit from R1

Geometry

t1	= 1.42 mm		
e3	= 15.2 mm		
z3	= 0.9 mm		
L1	= 14.5 mm		
tang width w	= 12.60 mm		
Rivet dia.	= 3.2 mm		
Effective width hinge	2* tang width – 1 rivet dia.	2*12.6-3.2	= 22.0 mm
Bending section area	= 22.0*1.4	= 31.2 mm^2	
Bending section Z	= 22.0*1.42^2/6	= 7.40 mm^3	

Allowables

Plastic Bending Allowable

Material = 7075-T73511 extrusion Ftu = 483. MPa Fty = 407. MPa

E = 71700 MPa, e = 3%

m = 19

Fo is calculated as PSM 5.3.8.4 Eq. 2-10

$$\frac{F_o}{F_{tu}} = \frac{6}{e_u^2}\left\{\frac{1}{3}\left(\frac{F_{tu}}{E}\right)^2 + e_u^{'}\frac{(m+1)}{(m+2)}\left(\frac{F_{tu}}{E}\right) + \frac{m}{(2m+1)}e_u^{'2}\right\} - 2$$

subdivide the (complex) formula

$\left(\frac{F_{tu}}{E}\right)$ 483./71700 = 6.74E-03

$e_u^{'} = e_{p(Ftu)} = e_u - \left(\frac{F_{tu}}{E}\right)$ 0.03-(483/71700) = 2.33E-02

$e_u^{'}\frac{(m+1)}{(m+2)}$ 0.0233*(19+1)/(19+2) = 2.22E-02

$\frac{m}{(2m+1)}e_u^{'2}$ 0.0233^2*19/(2*19+1) = 2.64E-04

Hence

Fo = 483*6/0.03^2{0.33*6.74^2E-03+2.2E-02*6.74E-03+2.64E-04}-2

F0 = 412.0 MPa

For a rectangular section, form factor k = 1.5

Fb = Ftu+ Fo(k-1) = 483. + 412.*(1.5-1) = 689. MPa

Loading (LC 3003)

Pax = 320. N. Ptr = -261. N. (Ult, Table 2-227)

Conservatively ignore load directions; add abs values

At fastener line M_{ult} = $[Ptr*e3]_{abs}$ + $[Pax*z3]_{abs}$ = 261.*15.2+320.*0.9 = 4259. N. mm

Limit RF

f =P_{ax}/A + M/Z (320/1.5)/31.2 + (4259/1.5)/7.40 = 390.8 MPa

RF = Fty/f = 407.0/390.8 **RF = 1.04**

Ultimate RF

Ra = (P_{ax}/A)/Ftu (320./31.2)/483. = 0.021

Rb = (M_{ult}/Z)/Fb (4259./7.40)/689 = 0.836

RF = 1/(Ra +Rb) 1/(0.021+0.836) **RF = 1.17**

2.5.14.5.1 Trim Tab Skins

The trim tab skins shown in Figure 2-136, close the trim tab body to provide a clean aerodynamic surface. They are considered as non-structure in FEM [13] and the analysis.

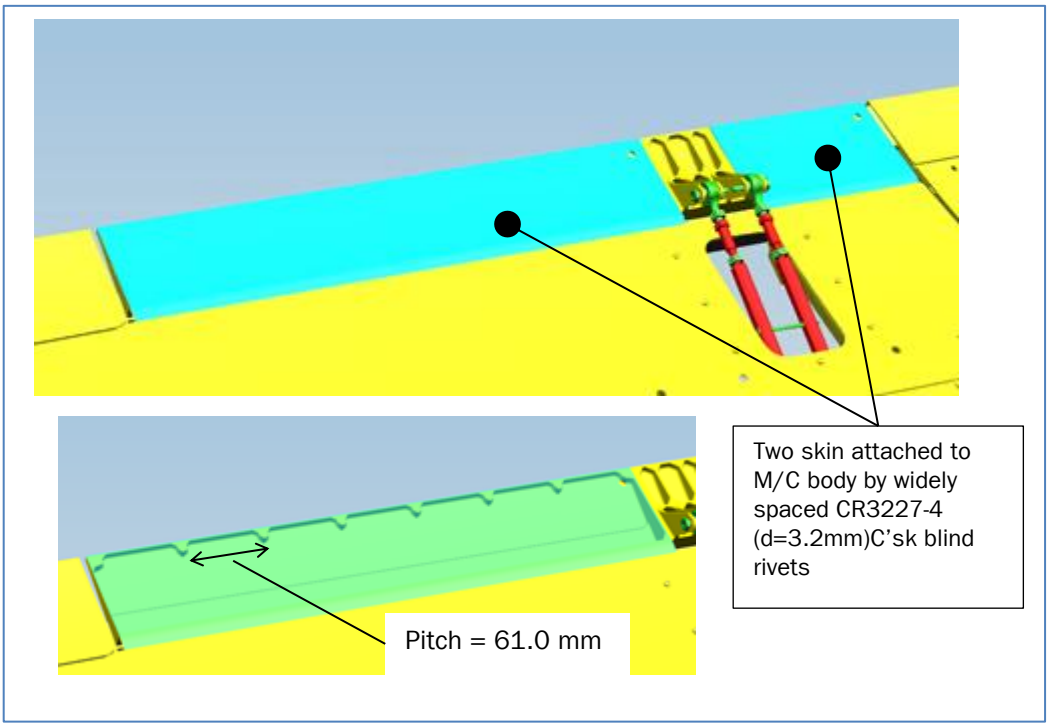

Figure 2-136 Trim tab skins, "lower aerodynamic surface".

2.5.15 Aileron Support Brackets

This section deals with the aileron support brackets see Figure 2 119. Three hinged brackets are employed to support the aileron, inboard, mid and outboard. The design of the brackets differs in line with their purpose. The inboard hinge in addition providing a hinge point, reacts all loading parallel to the hinge line. The mid hinge is semi floating, it can only react loads normal to the aileron body. The outboard bracket provides a hinge point but is allowed to float axially.

Loading for the support brackets is primarily from aerodynamic loads acting on the aileron surfaces. Superimposed on aerodynamic forces are loads resulting from wing bending; the use of three support brackets forces the aileron to conform to wing box deformations. Full details of hinge line interface loads and their derivation can be found in report ref [13].
A secondary role for the brackets is to support trailing edge (T/E) panels, a typical arrangement is shown in Figure 2-138. Aerodynamic loads for the T/E panels are defined in ref [22], they are combined with hinge interface loads in an envelope manner; i.e. each hinge interface load is combined with a worst T/E aero load, further detail are given in section 2.3.5.

The strength analysis of the brackets is based on a FEM approach using a solid (CTET10) element model. The three models, FEM [14], [15] and [16] employ two boundary condition sets. Applicable to all load cases is the set where wing box/bracket fasteners (CBUSH) are grounded i.e. wing box stiffness is not modelled. For inertia loading parallel to the hinge line (FEM [14] alone) it is assumed that T/E panel 8 provides a “drag brace” support for the inboard bracket. To improve accuracy of recovering surface stress levels the CTET elements are “skinned” with CTRIA6 element[50]

Bracket static strength is evaluated using following checks:

- Bracket body section stress levels (from a CTET FEM results)
- Bracket global buckling use a FE linear eigen approach.
- Bracket lug strength at hinge positions.
- Support bracket to aileron hinge, pin strength.
- Joint to rear spar fasteners, shear and bearing strength (bracket side of joint only)

[50] For DOF consistence with the CTETs, the skin elements are set as membranes.

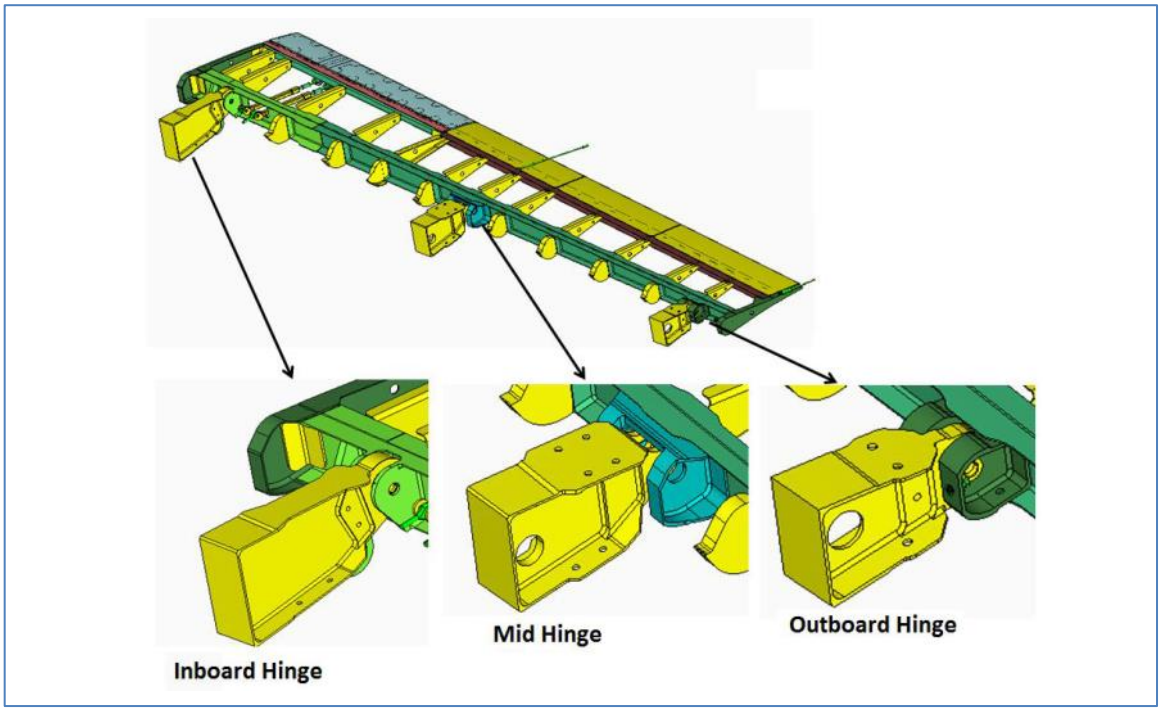

Figure 2-137 Wing to aileron support Brackets

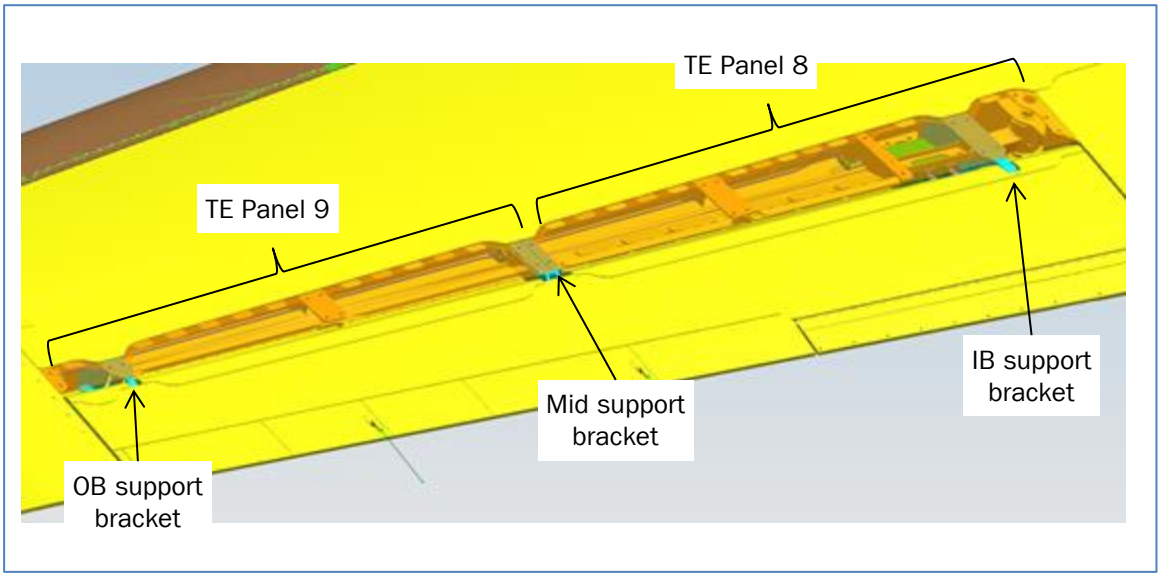

Figure 2-138 Wing to aileron support Brackets

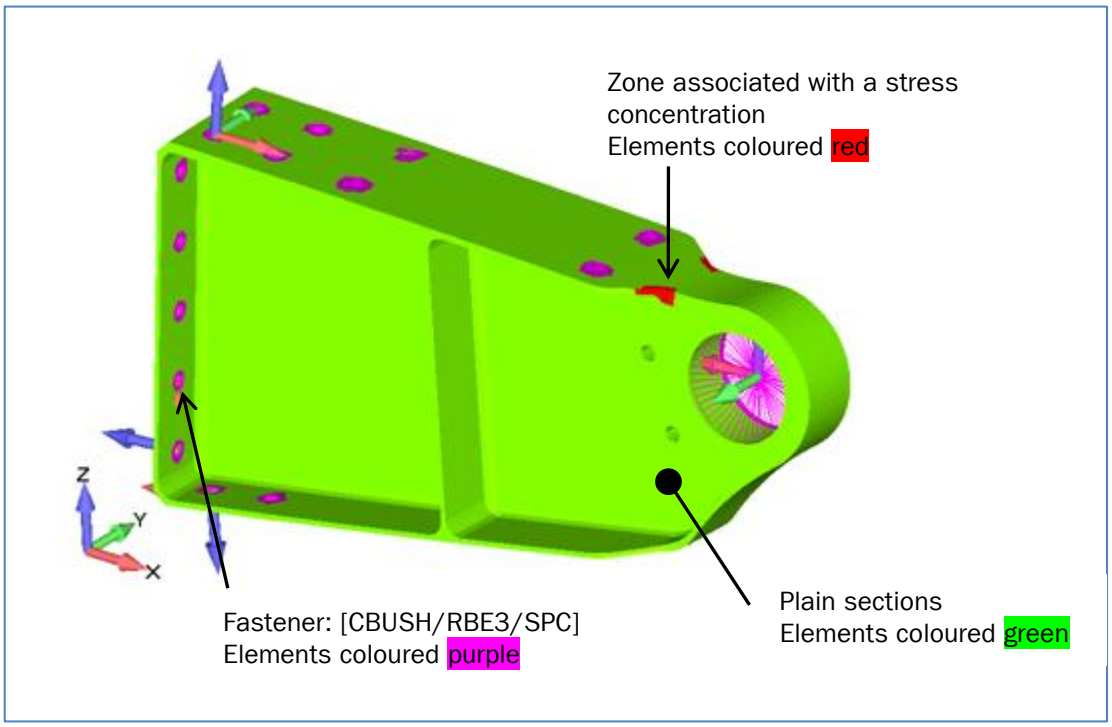

Figure 2-139 Support bracket FEM "stress" zones.

2.5.15.1 Calculation File, Geometry and Materials

The table below provides an overview of analysis data

Part	Part	Calculation Files			Material
		Id	Geometry	FEM	
IB Support bracket	557.60.24.462/63	14	Table 6-24	14	2124 T851 plate, B basis
Mid Support bracket	557.60.24.371/72			15	
OB Support bracket	557.60.24.381/82			16	

Table 2-229 Aileron support brackets, overview of calculation files, geometry and materials

2.5.15.2 Load Case Applicability

The complete set of aileron installation load cases is given Table 2-12. The sub set of loading applicable to the front spar hinge fittings is given in Table 2-56.

Load Case Applicability Table for Aileron Box						
Angle [°]	-25	-22	0	3	10	15
DFEM	10	20	30	40	50	60
Applicable Load Case Id's.	Aerodynamic + Wing Bending					
		2001	3002 3003	4004	5005	
	Flight Control System					
	None					
	Inertia					
			3053 3054			

Table 2-230 Applicable load cases front spar hinge fittings

2.5.15.3 Inboard Support Bracket

This section provides static strength substantiation for the aileron inboard support bracket. A simple overview of the bracket and wing box arrangement is shown in Figure 2-140 (below) and Figure 2-148.

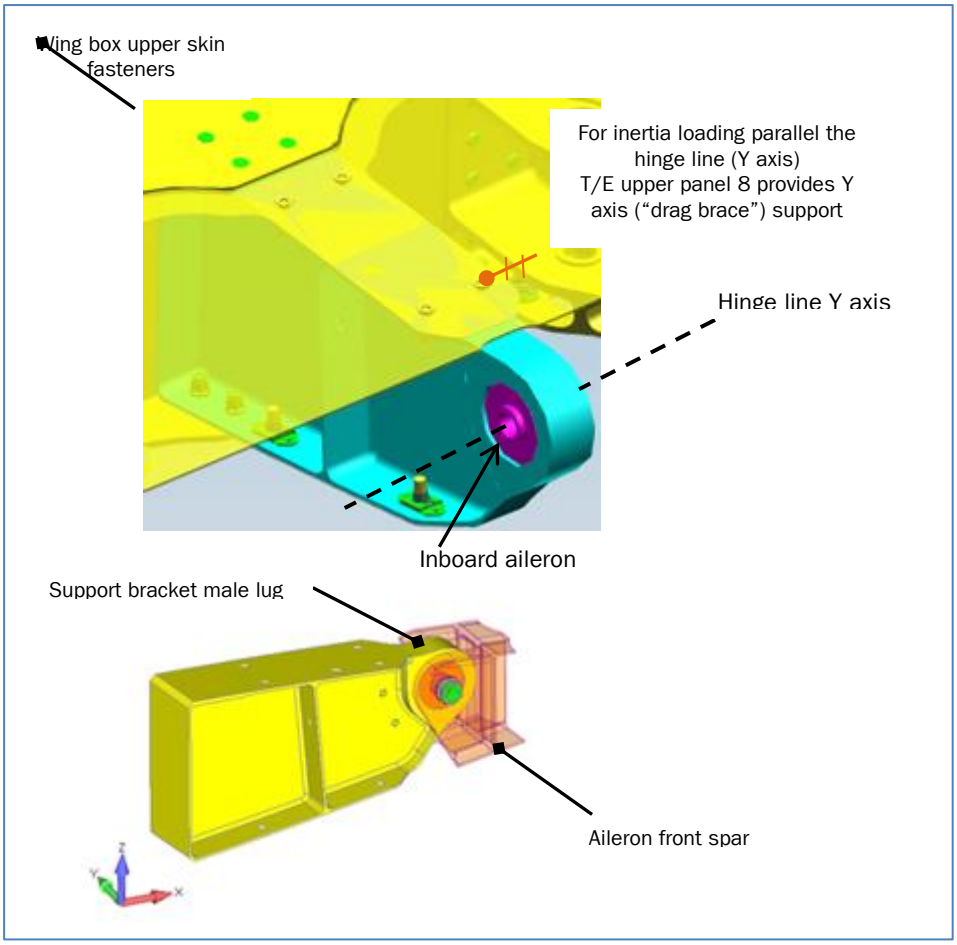

Figure 2-140 Inboard support bracket.

Part Details

Part No. 5572124369/70
Class 2 part B basis allowables used.
Aluminium , 2124-T851
Plate thickness, 50.81 - 76.20

2.5.15.3.1 IB Hinge Bearing Strength

Interface loading for the bearing is taken from ref. [13]. Loading is in the hinge coordinate system C2710001.

Bearing details:	Type	MS 27643-6 / MIL – B-7949
	Pilatus	940.83.38.604
	Outer dia:	36.5 mm
	Inner dia:	9.5 mm
Rating	Radial	22800. N.
	Axial	3600. N.

Load Case	Ultimate Radial Load		Ultimate Axial Load	
	Applied [N.]	RF	Applied [N.]	RF
2001	4394	>2.00	326	>2.00
3002	9384	>2.00	138	>2.00
3003	6487	>2.00	268	>2.00
3053	48.0	>2.00	3297	1.09
3054	48.0	>2.00	3297	1.09
4004	8708	>2.00	57.	>2.00
5005	7137	>2.00	47.	>2.00

Table 2-231 IB hinge bearing strength.

The IB board hinge is nominated to react, body forces parallel to the hinge line.

Mass of aileron		= 18.539 kg
18 g Acceleration	18*9.81	= 176.6 M/sec^2
Body force parallel to hinge line	176.6*18.539	= 3274.0 N

In agreement with FEM extracted value.

2.5.15.3.2 IB Bracket body Section Stress Levels

Bracket body stress levels have been determined using a linear FE approach. A brief overview of the FEM [14] is given in section 2.4.5.1.
For the purposes of determining section/flange strength RF's the FEM is divided into three zones (FEMAP groups) see Figure 2-139.

Plain sections	RF's for:	
	Surface stress	max principal vs Ftu
	Surface stress	min principal vs. Ftu
	Flange/web centre stress	max principal vs Ftu
	Flange/web centre stress	min principal vs local buckling allowable
Kt zones	RF's for:	
	Surface stress	Neuber σ vs Ftu
	Surface stress	Neuber σ vs. Ftu
	Flange/web centre stress	Neuber σ vs Ftu
	Flange/web centre stress	Neuber σ vs Ftu
Fastener hole zones	RF's for:	
	Zone covered by joint analysis (section)	

<u>Tension allowables</u>
All applied tension stresses are compared against Ftu.

Ftu = 469 MPa

For Kt regions the ultimate peak FEM stress is corrected using a Neuber approach (see Appendix L)

<u>Compression Allowables</u>
The allowable for compression stresses is dependent on the location within the bracket and if the location can be considered as a compact section.

The maximum flange "b/t" = 23.25/1.6 = 14.5 (lower flange)

b/t > 7.0[51] , therefore the flanges cannot be considered as compact section.

[51] PSM 5.34.3.1, Introduction

A dual strategy is employed to cover local buckling without being overly conservative at localised compression zones.

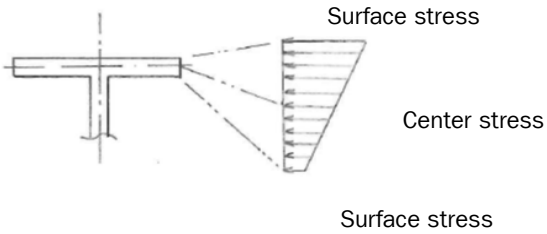

All surface stresses are considered as localized/compact and are compared against Ftu.

For Kt regions the ultimate peak FEM stress is corrected using a Neuber approach (see Appendix L)

All flange/web centres use a single local buckling allowable base on the worst b/t value.

<u>Local Buckling Compression Allowable</u>

From Figure 2-141 and Figure 2-142, it can be observed that bracket sections are not subject to uniform compression stresses. From this observation it is assumed that the local buckling allowable can be based on a non-uniform stress distribution.

Assume a long plate with one edge free ref. PSM 5.3.5.3, fig 5.3.5.3-16.

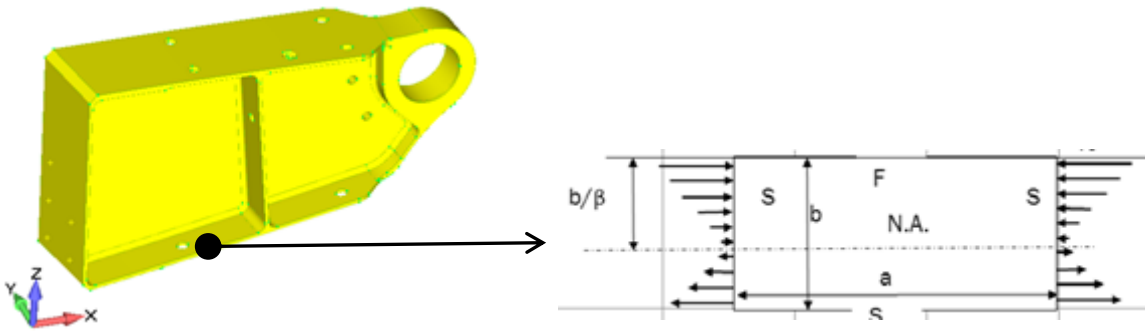

b = 23.25 mm
a/b = asymptote value
t = 1.6 mm
b/t = 14.5 mm
b/β = 1.0 All compression loading, 0.0 at web
K = 11.9 (Fig 5.3.5.3-16)

$F_{eb,cr} = \frac{\pi^2 K_n E_c}{12\cdot(1-\nu_e^2)}\left(\frac{t}{b}\right)^2$ Eq. 5.3.5.3.1

$F_{eb,cr}$ = 3.142*11.9* 75200/12*(1-0.33^2)*(1.6/23.25)^2 = 3912 MPa

Plastic correction factor $\eta_p(\phi) = \frac{1}{1+\phi^{m-1}} = \phi\cdot\frac{f_n}{\eta_{cl}\cdot F_{eb,cr}}$ Eq. 5.3.5.3.14

For 2124-T851, Plate 50.81 - 76.20 f_n = 388.8 MPa (PESS data)

Solving above for ϕ using an iterative strategy: ϕ = 1.075 Hence η_p = 0.1068

$F_{n,cr} = \eta_p \eta_{cl} F_{en,cr}$ = 0.1068*3912 Eq. 5.3.5.3.2

$F_{n,cr}$ =417.6 MPa

To supplement the above rational a FE linear buckling analysis has been performed on three critical load cases; results are presented in section 2.5.15.3.3

Ultimate Strength Summary Tables

M/C Body Plain Section (Surface) Stress Levels											
Loading		Maximum Principal					Minimum Principal				
Group	Case	Output Vector	Applied MPa	Allow Type	Allow MPa	RF	Output Vector	Applied MPa	Allow Type	Allow MPa	RF
ED + Aero	2001	7026	114.1	Ftu	469	4.11	7027	-59.9	Ftu	469	7.83
	3002	7026	234.4	Ftu	469	2.00	7027	-242.9	Ftu	469	1.93
	3003	7026	234.4	Ftu	469	2.00	7027	-242.9	Ftu	469	1.93
	4004	7026	199.5	Ftu	469	2.35	7027	-214.1	Ftu	469	2.19
	5005	7026	173.0	Ftu	469	2.71	7027	-178.6	Ftu	469	2.63
Inertia	3053	7026	450.2	Ftu	469	1.04	7027	-438.5	Ftu	469	1.07
	3054	7026	438.5	Ftu	469	1.07	7027	-450.2	Ftu	469	1.04

Table 2-232 Summary of RF's for bracket plain sections, surface stress levels.

Applied ultimate stress: = 450.2 MPs
Allowable stress: Ftu = 469. MPa
Location: see Figure 2-141
Critical case: 3053 **Critical RF = 1.04**

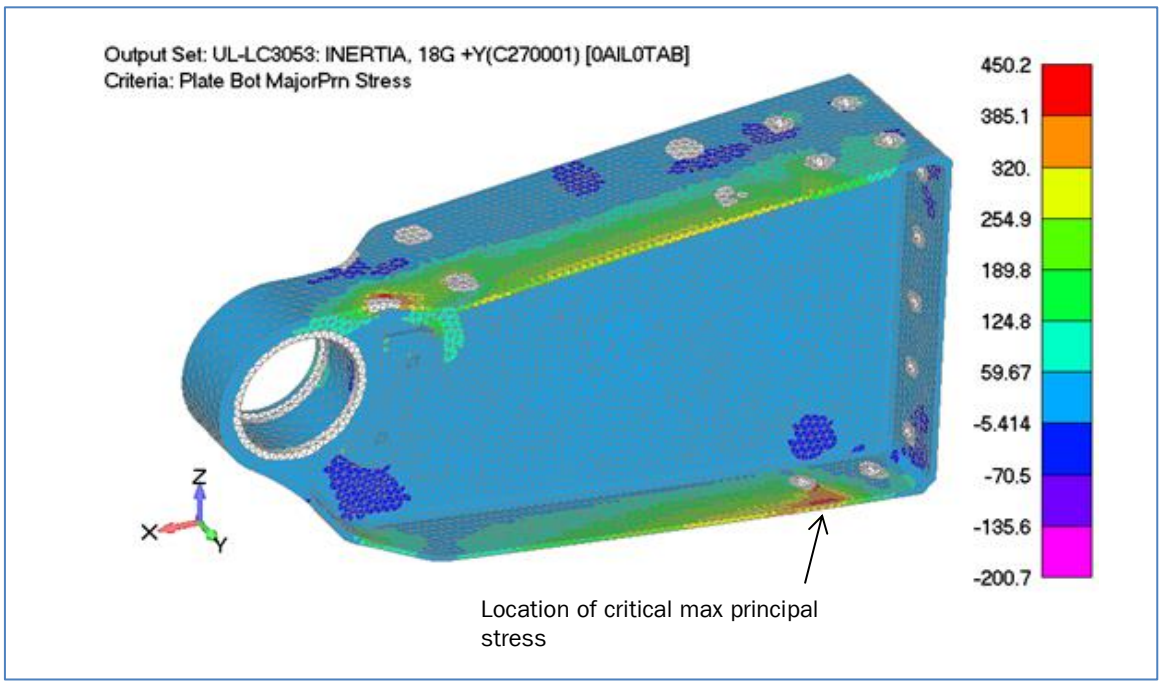

Figure 2-141 Bracket plain sections, surface stress levels: maximum principal stress, FEM [14].

M/C Body Plain Section (Centre) Stress Levels											
Loading		Maximum Principal					Minimum Principal				
Group	Case	Output Vector	Applied MPa	Allow Type	Allow MPa	RF	Output Vector	Applied MPa	Allow Type	Allow MPa	RF
ED + Aero	2001	60031	100.8	Ftu	469	4.65	60017	-47.3	Fcr(b)	418	8.82
	3002	60031	194.9	Ftu	469	2.41	60017	-215.0	Fcr(b)	418	1.94
	3003	60031	194.9	Ftu	469	2.41	60017	-215.0	Fcr(b)	418	1.94
	4004	60031	171.0	Ftu	469	2.74	60017	-189.4	Fcr(b)	418	2.20
	5005	60031	142.4	Ftu	469	3.29	60017	-158.0	Fcr(b)	418	2.64
Inertia	3053	60031	392.3	Ftu	469	1.20	60017	-385.5	Fcr(b)	418	1.08
	3054	60031	392.3	Ftu	469	1.20	60017	-412.4	Fcr(b)	418	1.01

Table 2-233 Summary of RF's for bracket plain sections, flange centre stress levels.

Applied ultimate stress: - 412.4 MPa
Allowable stress: $F_{n,cr}$ 418. MPa
Location: see Figure 2-142
Critical case: 3054 **Critical RF = 1.01**

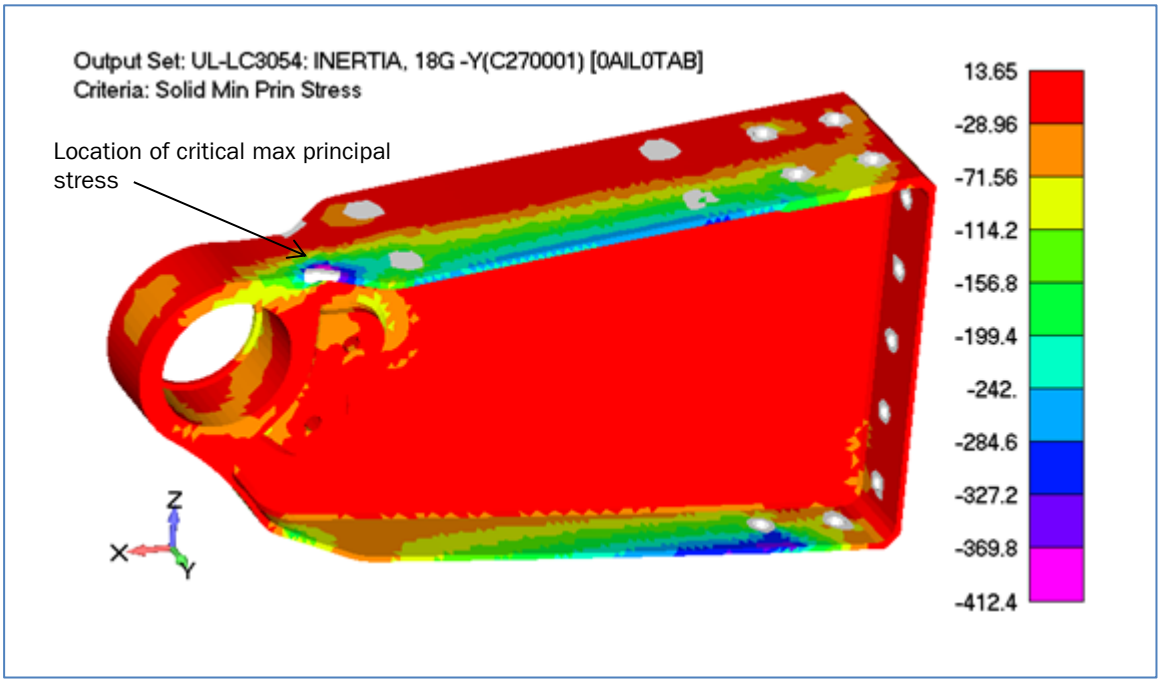

Figure 2-142 Bracket plain sections, flange centre stress levels: minimum principal stress, FEM 14

M/C Body Kt Zones Stress Levels													
Loading		Max Principal						Max Principal					
Group	Case	Output Vector	FEM	Neuber	Allow Type	Allow MPa	RF	Output Vector	FEM	Neuber	Allow Type	Allow MPa	RF
			MPa						MPa				
	2001	7026	80.1		Ftu	469	5.85	7027	-37.0		Ftu	469	12.66
	2001	60031	71.1		Ftu	469	6.59	60017	-6.3		Ftu	469	74.35
	3002	7026	108.8		Ftu	469	4.31	7027	-240.5		Ftu	469	1.95
ED	3002	60031	199.9		Ftu	469	2.34	60017	-206.7		Ftu	469	2.26
+	3003	7026	108.8		Ftu	469	4.31	7027	-240.5		Ftu	469	1.95
Aero	3003	60031	199.9		Ftu	469	2.34	60017	-206.7		Ftu	469	2.26
	4004	7026	104.7		Ftu	469	4.48	7027	-219.9		Ftu	469	2.13
	4004	60031	181.9		Ftu	469	2.57	60017	-188.1		Ftu	469	2.49
	5005	7026	99.2		Ftu	469	4.72	7027	-193.7		Ftu	469	2.42
	5005	60031	159.0		Ftu	469	2.94	60017	-164.3		Ftu	469	2.85
Inertia	3053	7026	661.1	442.0	Ftu	469	1.06	7027	-635.5	439.7	Ftu	469	1.06
	3053	60031	574.6	433.8	Ftu	469	1.08	60017	-588.4	435.0	Ftu	469	1.07
	3054	7026	635.5	439.7	Ftu	469	1.06	7027	-661.1	442.0	Ftu	469	1.06
	3054	60031	574.6	433.8	Ftu	469	1.08	60017	-591.0	436.2	Ftu	469	1.07

Table 2-234 Summary of RF's for bracket Kt zones.

Applied ultimate stress	-442.0 MPa	with Neuber correction
Allowable stress: Ftu	= 469. MPa	
Location:	see Figure 2-143	
Critical case:	3053	**Critical RF = 1.06**

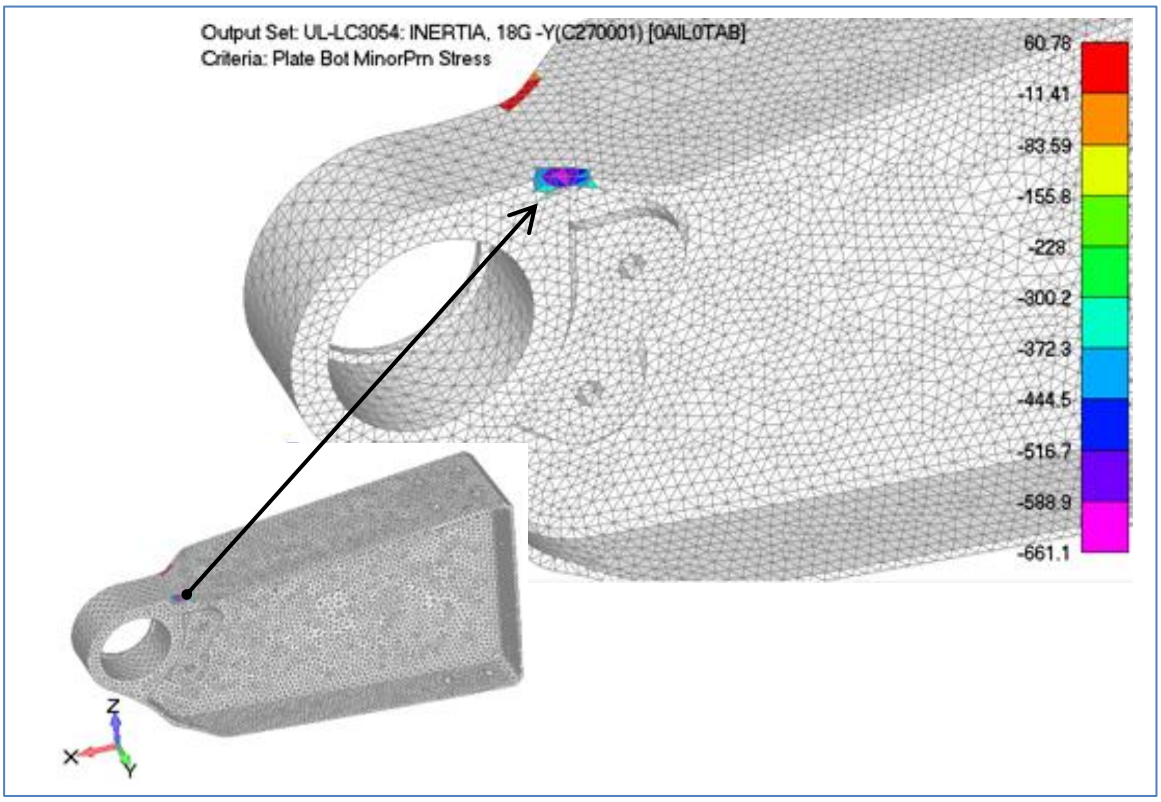

Figure 2-143 Bracket Kt zones, surface stress levels: maximum principal stress, FEM 14

2.5.15.3.3 IB Bracket Body FE Linear Buckling Check

In addition to checking section compression stress levels against a local flange buckling allowable; a FE linear buckling analysis has been performed. Boundary conditions and loading are as the static strength checks. I.e. extracted eigenvalues are relative to ultimate loads. From inspection of Table 2-237, three critical load cases have been identified.
A summary is presented below and mode shapes in Figure 2-144 & Figure 2-146.

Buckling criteria: No buckling at < Ultimate Loads

FEM[14] is primarily intended for static strength analysis. Mesh density combined with the use of CTET10 elements will result in over estimation of buckling eigenvalues. The analysis should be considered as a supplement/"safety check" of the local buckling allowable used in the previous section.

Load Case		Eigenvalue	RF
3002	ED1000002+VG-MF-003_A5 [0ail0tab]	2.505 (Figure 2 124)	>2.00
3053	Inertia, 18g +Y (C270001)	2.259 (Figure 2 125)	>2.00
3054	Inertia, 18g –Y (C270001)	2.089 (Figure 2 126	>2.00

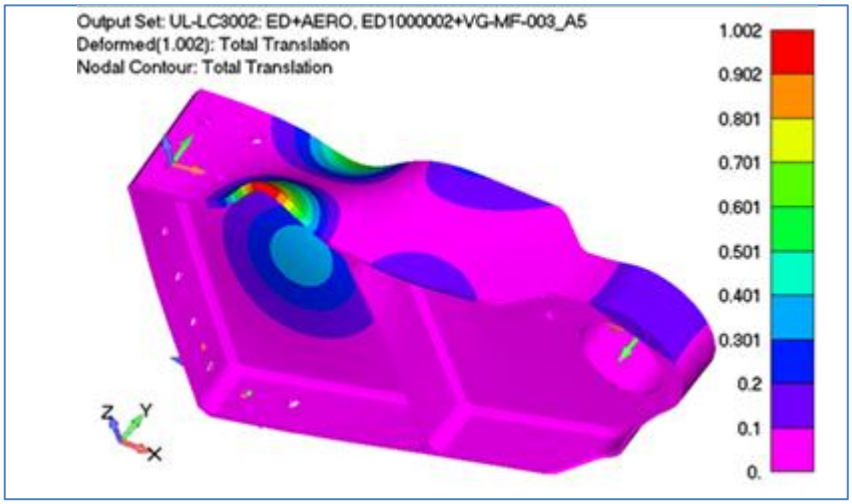

Figure 2-144 Bracket Body linear buckling 1st mode, critical ED + Aero case (LC3002), FEM [14]

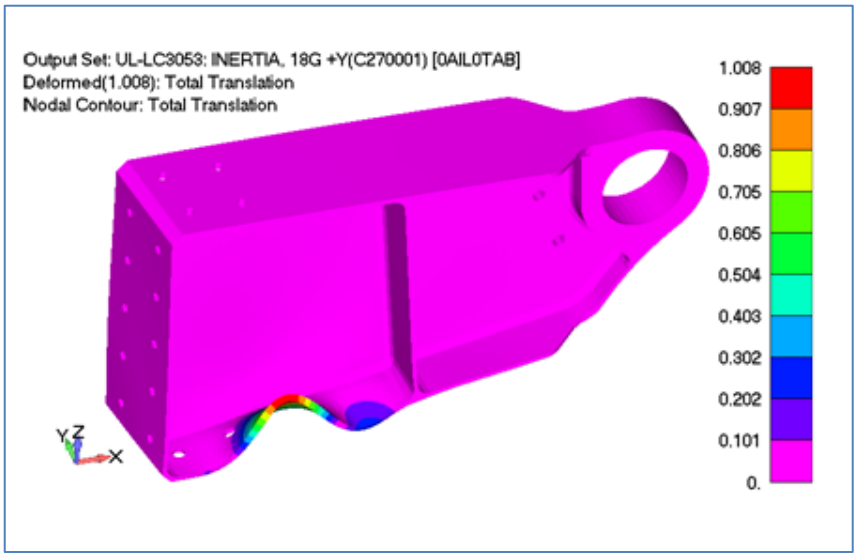

Figure 2-145 Bracket Body linear buckling 1st mode, critical inertia case (LC3053), FEM [14]

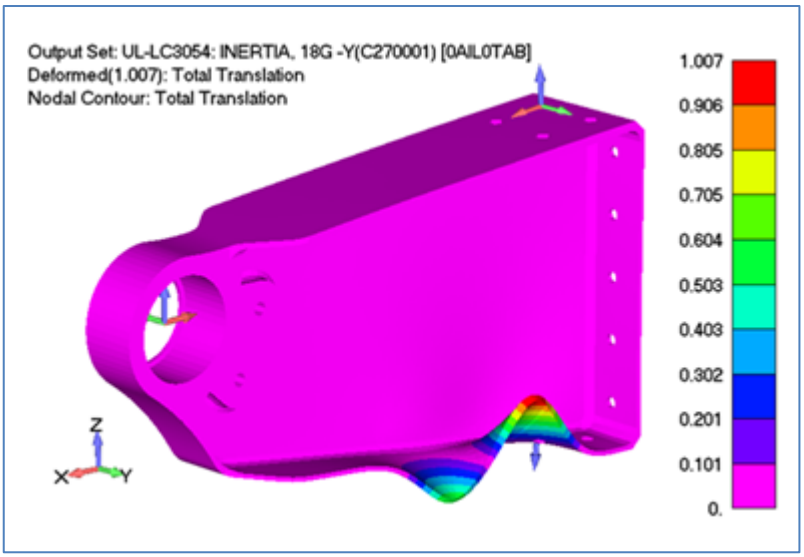

Figure 2-146 Bracket Body linear buckling 1st mode, critical inertia case 3054, FEM [14]

2.5.15.3.4 IB Support Bracket Hinge Lug/Pin Strength

The bracket supports the inboard end of the aileron via a single male lug and pin see Figure 2-140. Loading for the hinged joint is taken from aileron interface report ref [13]. Interface loads from ref. [13] are presented in the A/C or aileron hinge coordinates. For the lug analysis, loading relative to the lug axis is required; A local lug coordinate C1001 has been defined; it can be seen at the centre of the lug bore in Figure 2-147. It should be noted that unlike the aileron hinge coordinate it does not rotate with aileron position. Interface loads for the lug are presented in Table 2-235.

A/C coordinate system							
Load Case	Aero Pressure + Wing Bending					Inertia	
	2001	3002	3003	4004	5005	3053	3054
LIMIT [N.]							
Fx	2674	-4680	3709	-4514	-3628	286	-286
Fy	-72	-205	346	-173	-129	-3279	3279
Fz	-1215	4149	-2204	3646	3076	187	-187
$[Fx,Fz]_{res}$	2937	6254	4315	5803	4756	342	342
ULTIMATE [N.]							
Fx	4010	-7020	5564	-6772	-5442	429	-429
Fy	-107	-308	520	-259	-193	-4919	4919
Fz	-1822	6223	-3306	5469	4614	281	-281
$[Fx,Fz]_{res}$	4405	9381	6472	8704	7135	512	512

Bracket Lug coordinate system							
Load Case	Aero Pressure + Wing Bending					Inertia	
	2001	3002	3003	4004	5005	3053	3054
ULTIMATE [N.]							
Fx	-4005	7085	-5622	6825	5486	2	-2
Fy	326	138	-268	57	47	4945	-4945
Fz	-1809	6156	-3237	5408	4566	-72	72
$[Fx,Fz]_{res}$	4394	9385	6488	8708	7137	72	72

Table 2-235 Inboard support bracket interface loads.

The analysis for the lug is carried out by PSM 5 3 11 4_01.xlsm. This is an approve tool for use on the PC-24 project; as such a fully detailed worked example is not required. However for the critical case all input data is presented to enable independent verification. Pin analysis follows the method given in PSM 5.3.4.11, section 5.3.11.4.9.
Material strength data is given below and dimensional data in Figure 2-147.

Lug Material
Material = 2124-T851
Basis = B
Ftu = 469.0 MPa
Fty = 421.0 MPa
Fcy = 414.0 MPa
Fbry15 = 586.0 MPa
Fbry20 = 683.0 MPa

Pin Material
Material = A286 steel
Basis = B
Ftu = 1103.0 MPa
Fsu = 655.0 MPa

Bush Material
Design uses a spherical bearing, hence no lug bush.

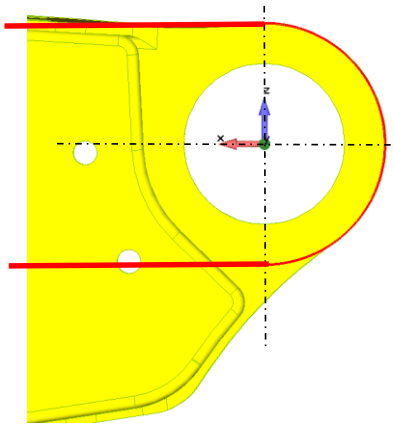

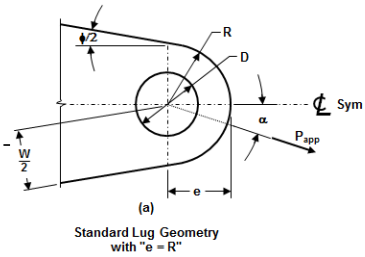

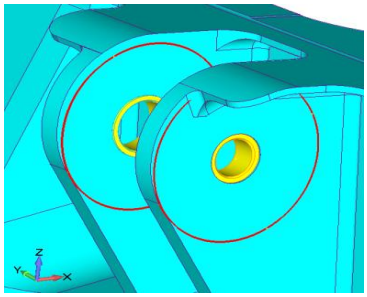

Shoulder in lug bore has been ignored

Lug Geometry

D =	36.51	mm
DPO =	9.53	mm
t =	20.70	mm
e =	24.80	mm
R =	24.80	mm
W/2 =	24.80	mm
phi =	0.00	deg

Bush Geometry

Di,bh =	9.53	mm
Do,bh =	-	mm

Pin Geometry

Dia =	9.50	mm
t1 =	5.25	mm
g1 =	3.90	mm
t2 =	20.70	mm
g2 =	3.90	mm
t3 =	5.25	mm

Figure 2-147 Inboard aileron support bracket, idealized lug and pin dimensions.

A summary of lug and pin ultimate RF's is presented in Table 2-236. A Worked example for critical case/RF follows. For lug lateral loading/RF see section 2.5.15.3.2

Criteria	Ult. Reserve Factor vs Load Case Id						
	Aero Pressure + Wing Bending					Inertia	
	2001	3002	3003	4004	5005	3053	3054
Lug stg	19.89	9.26	13.45	9.99	12.19	1189.00	1189.00
Pin Strg	3.14	1.47	2.12	1.58	1.93	191.19	191.19

Table 2-236 Summary of IB support bracket ultimate lug and pin RF's.

Lug
Critical Load Case 3002
Failure mode Tension strength ultimate

RF = >2.0
RF includes a fitting factor of 1.15

Pin
Critical Load Case 3002
Failure mode Bending

RF = 1.47
RF includes a fitting factor of 1.15

Summary of Lug Input – Output Data for Critical Case

Loading

Load Case	= 3002		
Safety Factor	= 1.50		
		Ult	Limit
Axial Load	P_{ax} =	7085.	4723. N.
Transverse Load	P_{tr} =	6156.	4104. N.
Resultant Load	P_{app} =	9385.	6257. N
Alpha =		41.0	41.0 deg.

Lug RF Summary from PSM 5 3 11 4 01.xlsm

Failure mode	Applied [N.]	Allowable [N.]	RF
Tension strength ultimate , P_{tu}	9385	100046	9.27
Tension strength limit, P_{ty}	6257	98788	13.73
Lug net section tension strength limit, $P_{ty,ns}$	6257	114073	15.85
Lug bearing strength limit, P_{bry}	6257	79390	11.03
Bush bearing strength limit, P_{bry}	N/A		

Failure mode = Tension strength ultimate **RF = 9.27**

RF includes a Fitting Factor of 1.15

Worked Example for Critical Pin RF

Calculate moment arms and section properties

$$L_1 = \left\{\frac{t_1}{2} + g_1 + \frac{t_2}{4}\right\}$$ = {5.25/2+3.90+20.70/4} = 11.70 mm Eq. 28

$$L_2 = \left\{\frac{t_3}{2} + g_2 + \frac{t_2}{4}\right\}$$ = {5.25/2+3.90+20.70/4} = 11.70 mm Eq. 29

$$L_{s,1} = \left\{\frac{t_1}{2} + g_1\right\}$$ = {5.25/2+3.90} = 6.52 mm

$$L_{s,2} = \left\{\frac{t_3}{2} + g_2\right\}$$ = {5.25/2+3.90} = 6.52 mm

$$A = \frac{\pi \cdot D_{po}^2}{4}$$ = Π*9.50^2/4 = 70.9 mm2 Eq. 49

$$Z = \frac{\pi \cdot D_{po}^3}{32}$$ = Π*9.50^3/32 = 84.2 mm3 Eq. 35

Calculate Pin Bending Moments and Shear Forces

Ultimate applied pin load = 9385 N.
Load case = 3002

$$M_{max,1} = \frac{(t_3 + 2g_2 + t_2)}{(t_1 + 2t_2 + t_3 + 2g_1 + 2g_2)} F\, L_1$$ Eq. 30

= (5.25+2*3.90+20.70)/(5.25+2*20.70+5.25+2*3.90+2*3.90)*9385*11.70 = 54884. N

$$M_{max,2} = \frac{(t_1 + 2g_1 + t_2)}{(t_1 + 2t_2 + t_3 + 2g_1 + 2g_2)} F\, L_2$$ Eq. 31

= (5.25+2*3.90+20.70)/(5.25+2*20.70+5.25+2*3.90+2*3.90)*9385*11.70 = 54884. N

M_{max} = 54884. N.

$$M_{z,1} = \frac{(t_3 + 2g_2 + t_2)}{(t_1 + 2t_2 + t_3 + 2g_1 + 2g_2)} F L_{z,1}$$ Eq. 41

= (5.25+2*3.90+20.70)/(5.25+2*20.70+5.25+2*3.90+2*3.90)*9385*11.70 = 54884. N

$$M_{z,2} = \frac{(t_1 + 2g_1 + t_2)}{(t_1 + 2t_2 + t_3 + 2g_1 + 2g_2)} F L_{z,2}$$ Eq. 42

= (5.25+2*3.90+20.70)/(5.25+2*20.70+5.25+2*3.90+2*3.90)*9385*11.70 = 54884. N

M_{max} = 54884. N

$$F_{z,1} = \frac{(t_3 + 2g_2 + t_2)}{(t_1 + 2t_2 + t_3 + 2g_1 + 2g_2)} F$$ Eq. 45

= (5.25+2*3.90+20.70)/(5.25+2*20.70+5.25+2*3.90+2*3.90)*9385 =4693. N.

$$F_{z,2} = \frac{(t_1 + 2g_1 + t_2)}{(t_1 + 2t_2 + t_3 + 2g_1 + 2g_2)} F$$ Eq. 46

= (5.25+2*3.90+20.70)/(5.25+2*20.70+5.25+2*3.90+2*3.90)*9385 =4693. N.

Calculate Pin Stress Levels and RF's

With reference to PSM 5.3.11.4-01 fig 12

At the position of maximum pin bending

Applied [MPa]	**Allowable [MPa]**	**RF**
$f_{b,max} = M_{max}/Z$ = 54884/84.2= 652.	Ftu = 1103.	1103/(1.15*652) = 1.47
		No plastic bending used.

At the position of maximum shear with bending

Applied [MPa]	**Allowable [MPa]**	**RF**
$f_{b,s} = M_s/Z$ = 30596/84.2 = 363.	Ftu = 1103.	1103/(1.15*363 =2.64
$f_{s,avg} = F_s/A$ = 4693/70.9 = 66.	Fsu = 655.	655/(1.15*66) =8.60

Interaction of shear and bending PEM 5.3.11.4, Eq.51 & 52

$$Q_b = \frac{f_{bu,s}}{F_{tu}} \quad \text{and} \quad Q_s = \frac{f_{su,avg}}{F_{su}}$$ Q_b = 363/1103 = 0.33 Q_s = 66/655 = 0.101

$$RF = \frac{1}{j\sqrt{Q_b^2 + Q_s^2}}$$ = 1/(1.15*SQRT(0.33^2 + 0.101^2)) RF = 2.52

Critical load case: 3002

Failure mode: Pin bending at maximum moment

Critical ultimate RF **RF = 1.47**

2.5.15.3.5 IB Support Bracket to Wing box Joint

The joint to the wing box is represented in FEM [14] by CBUSH "fasteners". An overview of the joint arrangement is given in Figure 2-148.
Fastener strength data has been taken from ref. [4] For skin/flange thickness values which do not match standard sheet values, simple linear interpolation has been used. Joint fastener details and allowables are presented in Table 2-237.
Loading applied to the bracket includes T/E panel forces (section 2.3.5) and hinge interface loads ref. [13].
A summary of bracket to wing box and T/E panel 8 joint RF's are presented in Table 2-238.

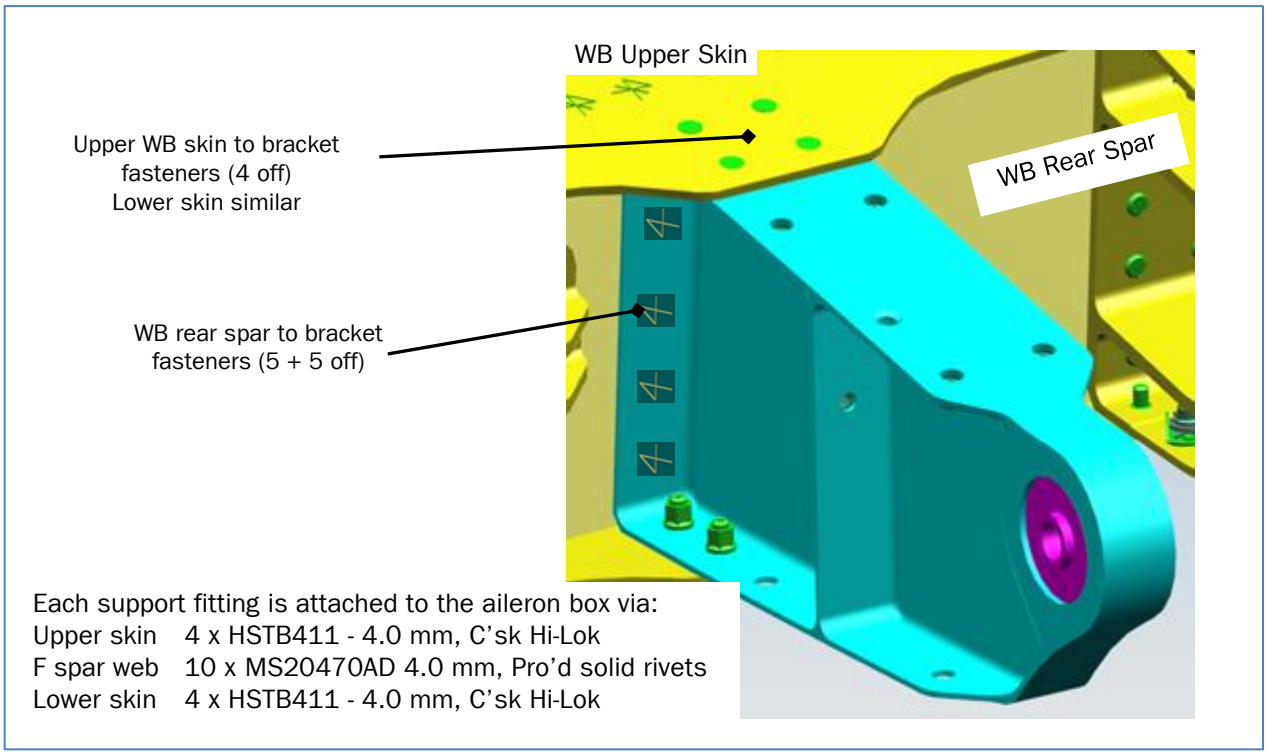

Figure 2-148 IB support bracket to front spar joint details.

Joint Allowables

Allow Id	Part	Fastener Details				Shear Allow	Ultimate Allowables		
							Bracket Bearing		
		Type	Dash	Dia	No.		t_{rib}	Mat_{brk}	/Fastener
				mm		N.	mm		N.
A	WB Upper Skin	HSTB411	6	4.80	4	12000	3.0	2124-T851	9765
B	WB Rear Spar	MS20470AD	5	4.00	10	2651	1.6	2124-T851	Shear Crt
C	WB Lower Skin	HSTB411	6	4.80	4	12000	1.7	2124-T851	5755
D	T/E Upper Panel	ES1756	6	4.80	2	12000	2.0	2124-T851	7020

Table 2-237 IB support bracket, summary of fastener allowables.

Joint Ultimate RF Summary

A summary of RF's for the support bracket to wing box joints is presented in Table 2-238.

Location	Joint Ultimate RF vs Load Case						
	2001	3002	3003	3053	3054	4004	5005
WB Upper skin	4.28	1.93	1.93	3.10	3.10	2.18	2.62
WB Rear Spar	7.94	3.20	3.20	2.22	2.22	3.65	4.30
WB Lower Skin	7.19	1.92	1.92	1.33	1.33	2.26	2.60
T/E upper Panel	99.99	99.99	99.99	1.86	1.86	99.99	99.99

Table 2-238 Summary of Inboard support bracket to WB joint ultimate RF's.

Critical load case: 3053

Failure mode: WB lower skin joint

Critical ultimate RF **RF = 1.33**

RF includes a Fitting Factor of 1.15

A worked example for the critical load case and fastener follows.

Joint Loading for Critical Load Case

Fastener loading has been extracted from FEM [14]. Each fastener is represented by a CBUSH. Element orientation is such that:

CBUSH X & Y forces are "shear"
CBUSH Z forces axial.

Due to flexibility of the fitting backup structure[52], joint loads are assumed to be transferred by fastener shear alone. This assumption is enforced in FEM [14] by using a PBUSH axial stiffness of the 10. N./ mm.

Joint loading and associated RF's for the critical case (see RF summary Table 2-238) are presented in Table 2-239.

Joint	CBUSH Id	Applied Shear	Applied Axial	Allowable Id	Allowable Fastener	Allowable Bearing	RF
		N.			N.		
WB Upper Skin	11	1889.7	0.4	A	12000	9765	4.49
	12	1974.8	-0.4	A	12000	9765	4.29
	13	2710.5	0.8	A	12000	9765	3.13
	14	2735.1	-0.8	A	12000	9765	3.1
WB Rear Spar	21	900.2	0.0	B	2651	Shear Crt	2.22
	22	285.7	0.1	B	2651	Shear Crt	7.01
	23	44.8	0.2	B	2651	Shear Crt	44.76
	24	236.8	0.1	B	2651	Shear Crt	8.46
	25	808.8	0.1	B	2651	Shear Crt	2.47
	26	901.5	-0.1	B	2651	Shear Crt	2.22
	27	268.7	-0.1	B	2651	Shear Crt	7.45
	28	43.8	-0.2	B	2651	Shear Crt	45.71
	29	235.8	-0.2	B	2651	Shear Crt	8.49
	30	816.3	-0.2	B	2651	Shear Crt	2.45
WB Lower skin	41	2283.4	0.8	C	12000	5755	2.19
	42	2289.3	-0.7	C	12000	5755	2.18
	43	3740.3	1.8	C	12000	5755	1.33
	44	3725.3	-1.8	C	12000	5755	1.34
T/E U	52	543.4	37.5	D	12000	7020	11.23
Skin	54	3280.7	226.2	D	12000	7020	1.86

Table 2-239 IB support bracket, fastener (CBUSH) loading and RF's

In addition to a 1.15 fitting factor, when the fastener is shear critical a 1.15 shear critical factor has been used in calculation the RF.

[52] The stiffness oft he backup structure is not modelled in FEM [14]

Worked Example

From Table 2-239

Critical RF (1.33) is associated with CBUSH 43 (WB lower skin)

Fastener ultimate loads for CBUSH 43 are:

Shear resultant force	= 3740. N.	
Axial force	= 1.8 N.	(negligible)

Fastener details for the skin/flange (from Table 2-237)

Fastener HSTB411 Hi-Lok, Dia.	= 4.8mm, C'sk head.	
Fastener shear allow.	= 12000. N.	
Bearing in support bracket	= 5755. N.	flange t = 1.7mm, alu 2185 T851

Joint allow is minimum of shear and bearing = 5755. N.

Joint is bearing critical

RF = Allowable/(Fitting Factor*Applied) =5755/(1.15*3740) RF = 1.33

2.5.15.4 Mid Support Bracket

This section provides static strength substantiation for the aileron mid support bracket. A simple overview of the bracket and wing box arrangement is shown in Figure 2-149(below) and Figure 2-154.

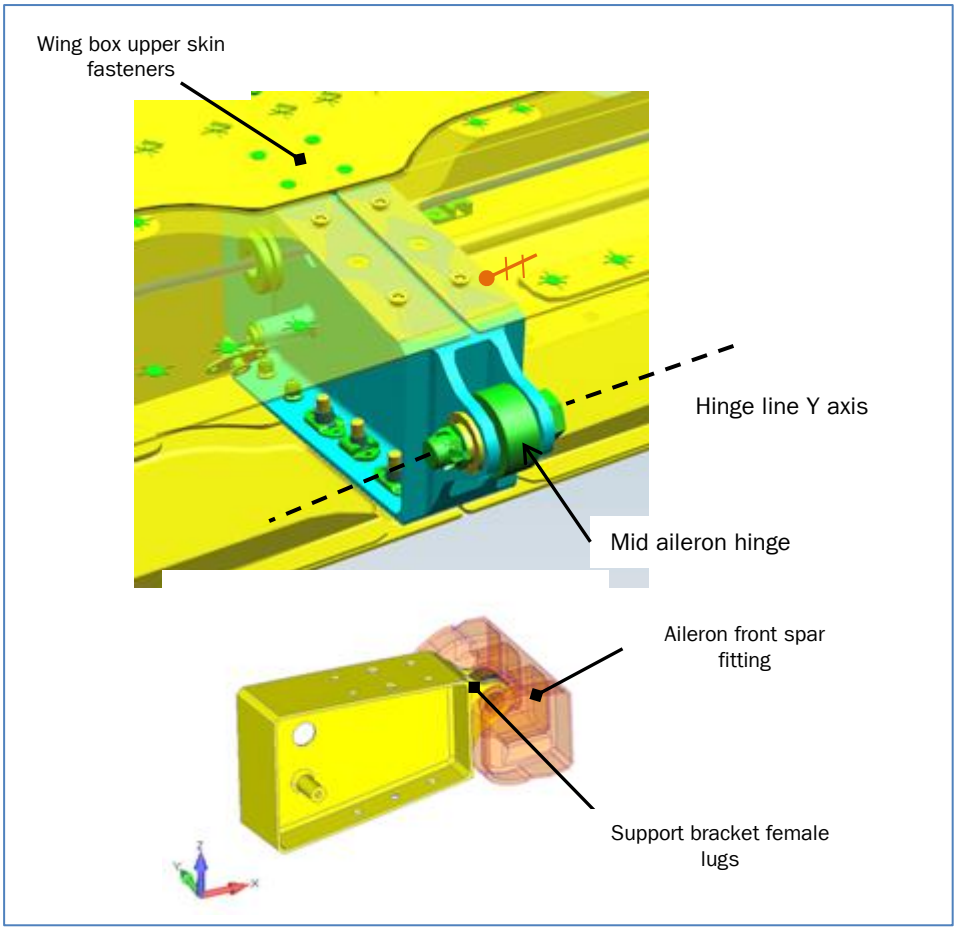

Figure 2-149 Mid support bracket.

Part Details

Part No. 5572124371/72
Class 2 part B basis allowables used.
Aluminium , 2124-T851
Plate thickness, 50.81 - 76.20 mm

2.5.15.4.1 Mid Hinge Bearing Strength

Interface loading for the bearing is taken from ref. [13]. Loading is in the hinge coordinate system C2710001.

Bearing details:	Type	MS21438-106
	Pilatus	940.83.06.105
	Outer dia:	26.99 mm
	Inner dia:	9.53 mm
Rating	Radial[53]	12000. N.
	Axial	Low

Load Case	Ultimate Radial Load [N.]		Ultimate Axial Load [N.]	
	Applied [N.]	RF	Applied [N.]	RF
2001	742.	>2.00	0.0	>2.00
3002	5198.	>2.00	0.0	>2.00
3003	1947.	>2.00	0.0	>2.00
3053	64.	>2.00	0.7	>2.00
3054	64.	>2.00	0.7	>2.00
4004	1539.	>2.00	0.0	>2.00
5005	1744.	>2.00	0.0	>2.00

Table 2-240 Mid hinge bearing strength.

[53] Conservative, operating as a track roller used as ultimate allowable.

2.5.15.4.2 Mid Bracket body Section Stress Levels

Bracket body stress levels have been determined using a linear FE approach. A brief overview of the FEM [15] is given in 2.4.5.2
For the purposes of determining section/flange strength RF's the FEM is divided into two[54] zones (FEMAP groups).

Plain sections RF's for:

Surface stress	max principal vs Ftu
Surface stress	min principal vs. Ftu
Flange/web centre stress	max principal vs Ftu
Flange/web centre stress	min principal vs local buckling/crippling allowable

Fastener hole zones RF's for:
Zone covered by joint analysis (section 2.5.15.4.5)

<u>Tension Allowables</u>
All applied tension stresses are compared against Ftu.

Ftu = 469 MPa

<u>Compression Allowables</u>
The allowable for compression stresses is dependent on the location within the bracket and if the location can be considered as a compact section.

The maximum "b/t" = 21.2/2.0 10.6 mm (upper & lower flanges)

b/t > 7.0[55] , therefore the flanges cannot be considered as compact section.

A dual strategy is employed to cover local buckling without being overly conservative at localised compression zones.

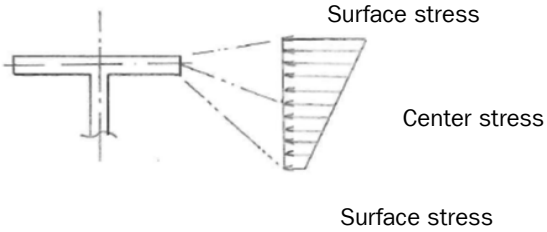

All surface stresses are considered as localized/compact and are compared against Ftu.
All flange/web centres use a single local buckling or crippling allowable base on the worst b/t value.

[54] Max FEMpeak stress <Ftu, therefore no Neuber correction or separate Kt group required.
[55] PSM 5.34.3.1, Introduction

Flange Buckling Compression Allowable

The bracket sections are assumed to be subject to uniform compression stresses. The local buckling allowable will be based on the minimum of local flange buckling (PSM 5.3.5.3) and flange crippling (PSM 5.3.4.3-01).

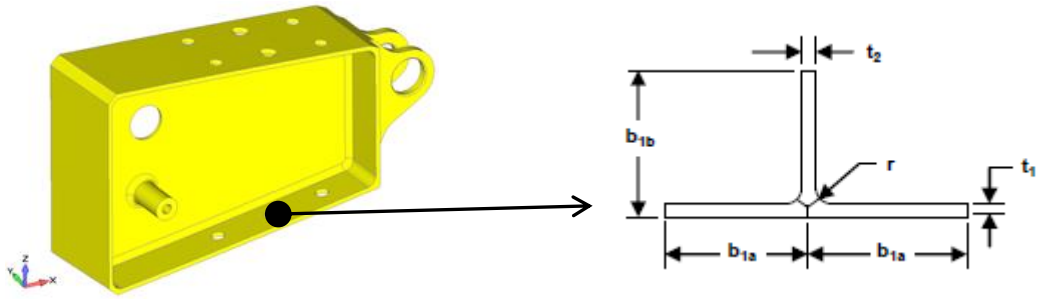

Crippling Allowable

b1a	= 21.2 mm	
t1	= 2.0 mm	
t2	= 2.0 mm	
r	= 2.5 mm	
b1a.eff	= 20.4 mm	
Ki	= 0.41	(simple supports)

$x_i = \frac{b_{i,eff}}{t_i}\sqrt{\frac{F_{cy}}{K_i E_c}}$ =(20.4/2.0)*SQRT(414/(0.41*75200) = 1.18 Eq. 5.3.4.3-2

$y_i = \frac{0.78}{x_i}$ = 0.78/1.18 = 0.66

$F_{cc,I} = y_i * Fcy$ = 0.66*414. = 273.2 MPa Eq. 5.3.4.3-1

Fcc =273.2 MPa

Fcc/Fcy = 273/414 = 66%. No Fcy cut-off required

Local Buckling of Free Flange Allowable

Assume a uniform stress along flange short edge

Assume three edges simple support, one edge free

Ref. PSM 5.3.5.3

b	= 21.2mm	
t	= 2.0 mm	
K	= 0.3	PSM Fig 5.3.5.3-11, FSSS curve
E	= 75200 MPa	2125 T8511
ν	= 0.33	2125 T8511

$F_{cr} = \frac{\eta_p \eta_{cl} \pi^2 K E_c}{12(1-\nu_m^2)}\left(\frac{t}{b}\right)^2$ = [1.0*1.0*Π^2*0.3*75200/12*(1.0 - .33^2)]*(2.0/21.2)^2

Fcr = 185.3 MPa

Fcr/Fcy = 185.3/414 = 45%. No plastic correction required.

To supplement the above rational a FE linear buckling analysis has been performed on three critical load cases; results are presented in section 2.5.15.4.3

Ultimate Strength Summary Tables

M/C Body Plain Section (Surface) Stress Levels											
Loading		Maximum Principal					Minimum Principal				
Group	Case	Output Vector	Applied MPa	Allow Type	Allow MPa	RF	Output Vector	Applied MPa	Allow Type	Allow MPa	RF
ED + Aero	2001	7026	31.4	Ftu	469	14.95	7027	-21.8	Ftu	469	21.53
	3002	7026	203.2	Ftu	469	2.31	7027	-238.5	Ftu	469	1.97
	3003	7026	77.1	Ftu	469	6.08	7027	-67.8	Ftu	469	6.92
	4004	7026	184.9	Ftu	469	2.54	7027	-228.9	Ftu	469	2.05
	5005	7026	199.1	Ftu	469	2.36	7027	-226.9	Ftu	469	2.07
Inertia	3053	7026	3.4	Ftu	469	136.79	7027	-3.9	Ftu	469	120.29
	3054	7026	3.9	Ftu	469	120.29	7027	-3.4	Ftu	469	136.79

Table 2-241 Summary of RF's for mid bracket plain sections, surface ultimate stress levels.

Applied stress: -238.5 MPa
Allowable stress: Ftu 469. MPa
Location: see Figure 2-150
Critical case: 3002 **Critical RF = 1.97**

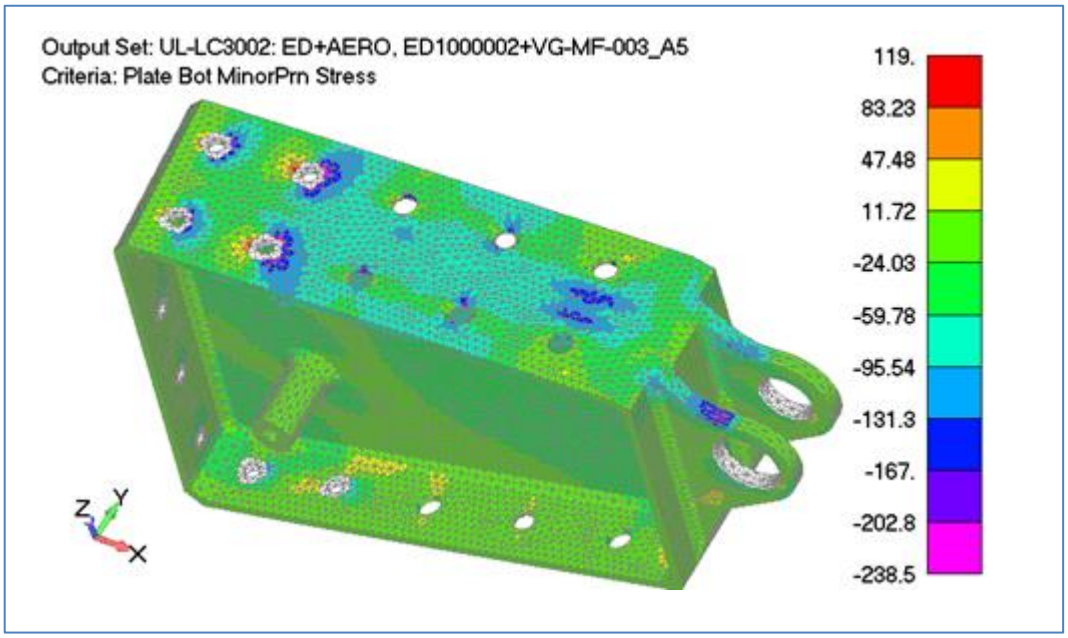

Figure 2-150 Mid bracket plain sections, surface ultimate stress levels: minor principal stress.

M/C Body Plain Section (Centre) Stress Levels											
Loading		Maximum Principal					Minimum Principal				
Group	Case	Output Vector	Applied MPa	Allow Type	Allow MPa	RF	Output Vector	Applied MPa	Allow Type	Allow MPa	RF
ED + Aero	2001	60016	25.5	Ftu	469	18.38	60017	-18.7	Fcr	185	9.94
	3002	60016	173.7	Ftu	469	2.70	60017	-165.1	Fcr	185	1.12
	3003	60016	56.6	Ftu	469	8.29	60017	-58.0	Fcr	185	3.20
	4004	60016	158.4	Ftu	469	2.96	60017	-145.7	Fcr	185	1.27
	5005	60016	170.7	Ftu	469	2.75	60017	-146.9	Fcr	185	1.26
Inertia	3053	60016	2.9	Ftu	469	160.49	60017	-2.9	Fcr	185	64.62
	3054	60016	2.9	Ftu	469	163.54	60017	-2.9	Fcr	185	63.42

Table 2-242 Summary of RF's for mid bracket plain sections, flange centre stress levels, FEM [15]

Applied stress: -165.1 MPs
Allowable stress: Fcr 185. MPa
Location: see Figure 2-151
Critical case: 3002 **Critical RF = 1.12**

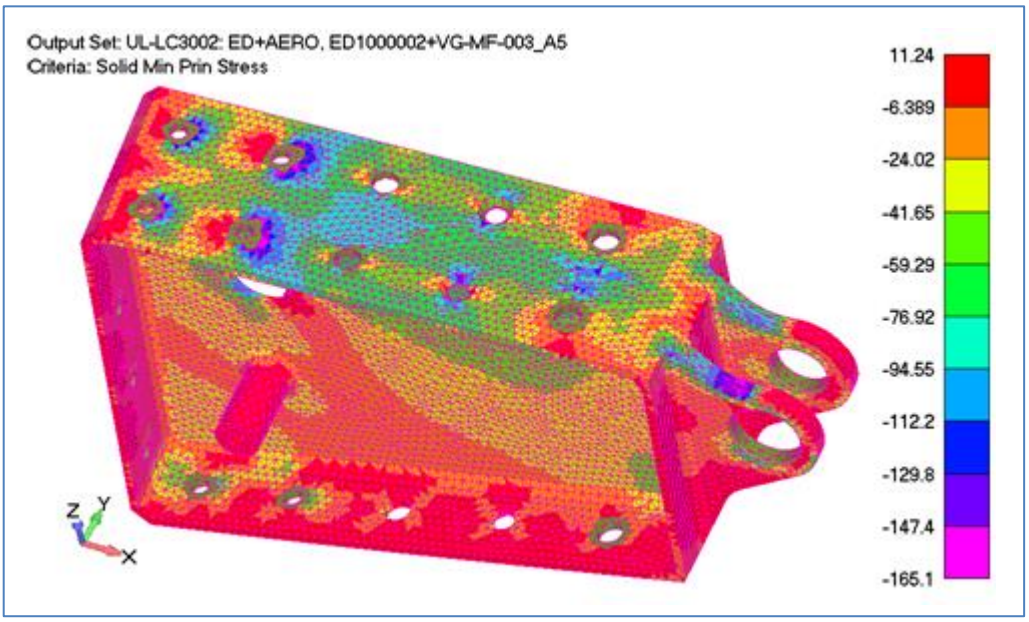

Figure 2-151 Mid bracket plain sections, flange centre ultimate stress levels: min principal stress

2.5.15.4.3 Mid Bracket Body FE Linear Buckling Check

In addition to checking section compression stress levels against a local flange crippling allowable a FE linear buckling analysis has been performed. Boundary conditions and loading are as the static strength checks. I.e. extracted eigenvalues are relative to ultimate loads. From inspection of Table Table 2-241, one critical load case has been identified.
A summary is presented below and mode shape in Figure 2-152

Buckling criteria: No buckling at < Ultimate Loads

FEM[15] is primarily intended for static strength analysis. Mesh density combined with the use of CTET10 elements will result in over estimation of buckling eigenvalues. The analysis should be considered as a supplement/"safety check" of the local buckling allowable used in the previous section.

Load Case		Eigenvalue	RF
3002	ED1000002+VG-MF-003_A5 [0ail0tab]	7.15	>2.00

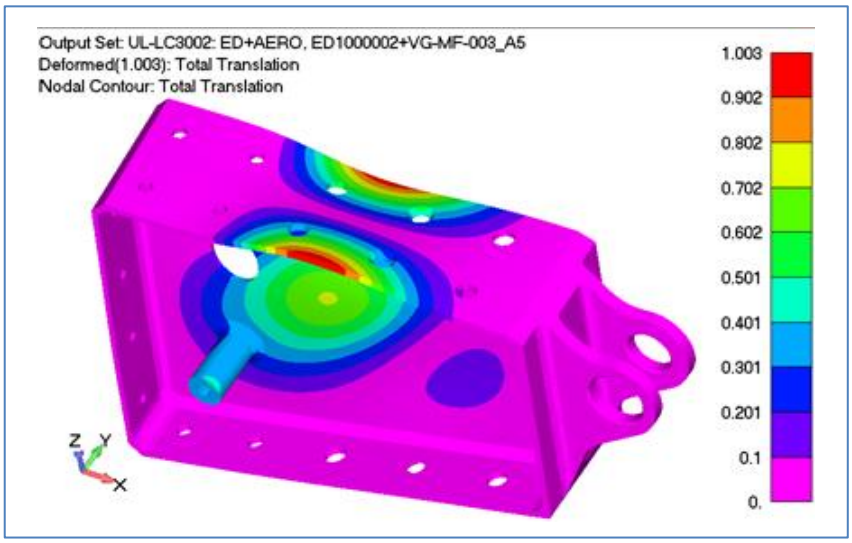

Figure 2-152 Mid Bracket Body linear buckling 1st mode, critical ED + Aero case (3002)

2.5.15.4.4 Mid Support Bracket Hinge Lug Strength

The bracket supports the midle of the aileron via double lugs and pin see Figure 2-149.
Loading for the hinged joint is taken from aileron interface report ref [13]. Interface loads from ref. [13] are presented in the A/C and aileron hinge coordinates. For the lug analysis, loading relative to the lug axis is required. A local lug coordinate C1001 has been defined; it can be seen at the centre of the lug bore in Figure 2-153. It should be noted that unlike the aileron hinge coordinate it does not rotate with aileron position. Interface loads for the lug are presented in Table 2-243.

A/C coordinate system							
Load Case	Aero Pressure + Wing Bending					Inertia	
	2001	3002	3003	4004	5005	3053	3054
LIMIT [N.]							
Fx	183	14	-5	174	587	0	0
Fy	-17	249	-93	236	285	4	-4
Fz	-459	3456	-1295	3069	3248	64	-64
$[Fx,Fz]_{res}$	494	3456	1295	3074	3300	64	64
ULTIMATE [N.]							
Fx	274	22	-8	260	880	0	0
Fy	-25	374	-140	353	427	6	-6
Fz	-689	5184	-1942	4604	4872	95	-95
$[Fx,Fz]_{res}$	741	5184	1942	4611	4950	95	95

Bracket Lug coordinate system							
Load Case	Aero Pressure + Wing Bending					Inertia	
	2001	3002	3003	4004	5005	3053	3054
ULTIMATE [N.]							
Fx	-278	0	0	-242	-863	0	0
Fy	0	0	0	0	0	1	-1
Fz	-688	5198	-1947	4618	4893	96	-96
$[Fx,Fz]_{res}$	742	5198	1947	4625	4969	96	96

Table 2-243 Mid support bracket interface loads.

Conservatively a 60/40 load split has been used to proportion the interface (Table 2-243) load between the two lugs.
The analysis for the lug is carried out by PSM 5 3 11 4_01.xlsm. This is an approve tool for use on the PC-24 project; as such a fully detailed worked example is not required. However for the critical case all input data is presented to enable independent verification. Pin analysis follows the method given in PSM 5.3.4.11, section 5.3.11.4.9.
Material strength data is given below and dimensional data in Figure 2-153.

Lug Material
Material = 2124-T851
Basis = B
Ftu = 469.0 MPa
Fty = 421.0 MPa
Fcy = 414.0 MPa
Fbry15 = 586.0 MPa
Fbry20 = 683.0 MPa

Pin Material
Material = A286 steel
Basis = B
Ftu = 1103.0 MPa
Fsu = 655.0 MPa

Bush Material
Material = Al-Bz, AMS4640
Fcy = 469.0 MPa

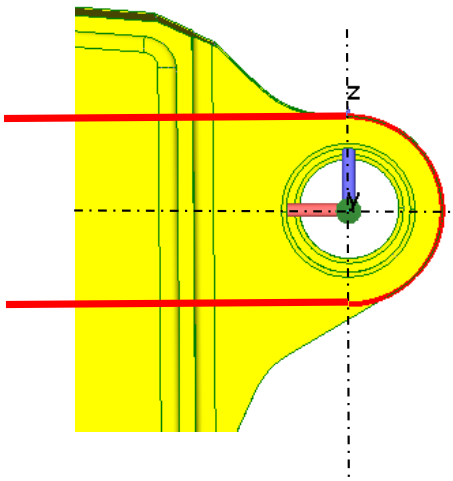

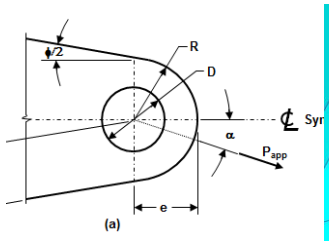

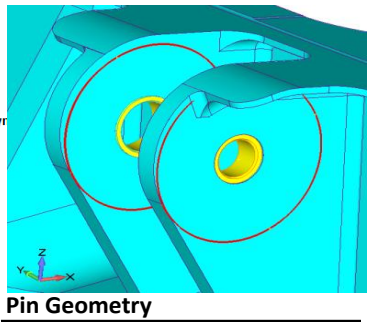

Lug Geometry

D =	15.88	mm
DPO =	9.50	mm
t =	4.00	mm
e =	12.00	mm
R =	12.00	mm
W/2 =	12.00	mm
phi =	0.00	deg

Bush Geometry

Di,bh =	12.70	mm
Do,bh =	15.91	mm

Pin Geometry

Dia =	9.50	mm
t1 =	4.00	mm
g1 =	2.14	mm
t2 =	11.56	mm
g2 =	2.14	mm
t3 =	4.00	mm

Outboard female lug critical.
Slightly unsymmetrical joint
60/40 load split used

Figure 2-153 Mid aileron support bracket, idealized lug and pin dimensions.

A summary of RF's is presented in Table 2-244. Lug dimensions are such that the outboard lug is critical; inboard is passed by comparison. A Worked example for critical case/RF follows.

Criteria	Ult. Reserve Factor vs Load Case Id						
	Aero Pressure + Wing Bending					Inertia	
	2001	3002	3003	4004	5005	3053	3054
Lug stg (inb)	-	-	-	-	-	-	-
Lug stg (Out)	21.10	2.93	7.83	3.31	3.10	159.79	159.79
Pin Strg	30.96	4.41	11.79	4.96	4.62	240.46	240.46

Table 2-244 Summary of Mid support bracket lug and pin RF's.

Lug
Critical Load Case: 3002
Failure mode Tension strength ultimate

RF = >2.0
RF includes a fitting factor of 1.15

Pin
Critical Load Case 3002
Failure mode Bending

RF = >2.0
RF includes a fitting factor of 1.15

Summary of Lug Input – Output Data for Critical Case

Loading

Load Case =	3002			
Safety Factor =	1.50			
		Ult. Interface	Ult Lug	Limit Lug
Axial Load	P_{ax} =	0.	0.	0. N.
Transverse Load	P_{tr} =	5198.	3119.	2079. N.
Resultant Load	P_{app} =	5198.	3119.	2079. N
Alpha =			90.0	90.0 deg.

Lug RF Summary from PSM 5 3 11 4_01.xlsm

Failure mode	Applied [N.]	Allowable [N.]	RF
Tension strength ultimate , Ptu	3119	10532.	2.94
Tension strength limit, Pty	2079	10400.	4.35
Lug net section tension strength limit, Pty,ns	2079	13683.	5.72
Lug bearing strength limit, Pbry	2079	9523.	3.98
Bush bearing strength limit, Pbry	2079	44077.	18.43

Failure mode = Tension strength ultimate **RF = >2.0**

RF includes a Fitting Factor of 1.15

Worked Example for Pin RF

Calculate moment arms and section properties

$L_1 = \left\{\frac{t_1}{2} + g_1 + \frac{t_2}{4}\right\}$ = {4.0/2+2.14+11.56/4} = 7.03 mm Eq. 28

$L_2 = \left\{\frac{t_3}{2} + g_2 + \frac{t_2}{4}\right\}$ = {4.0/2+2.14+11.56/4} = 7.03 mm Eq. 29

$L_{s,1} = \left\{\frac{t_1}{2} + g_1\right\}$ = {4.0/2+2.14} = 4.14 mm

$L_{s,2} = \left\{\frac{t_3}{2} + g_2\right\}$ = {4.0/2+2.14} = 4.14 mm

$A = \frac{\pi \cdot D_{po}^2}{4}$ = Π*9.50^2/4 = 70.9 mm2 Eq. 49

$Z = \frac{\pi \cdot D_{po}^3}{32}$ = Π*9.50^3/32 = 84.2 mm3 Eq. 35

Calculate Pin Bending Moments and Shear Forces

Ultimate applied pin load = 5198 N.
Load case = 3002

$$M_{max,1} = \frac{(t_3 + 2g_2 + t_2)}{(t_1 + 2t_2 + t_3 + 2g_1 + 2g_2)} F L_1$$ Eq. 30

= (4.00+2*2.14+11.56)/(4.00+2*11.56+4.00+2*2.14+2*2.14)*5198*7.03 = 18268. N

$$M_{max,2} = \frac{(t_1 + 2g_1 + t_2)}{(t_1 + 2t_2 + t_3 + 2g_1 + 2g_2)} F L_2$$ Eq. 31

= (4.00+2*2.14+11.56)/(4.00+2*11.56+4.00+2*2.14+2*2.14)*5198*7.03 = 18268. N

M_{max} = 18268. N.

$$M_{s,1} = \frac{(t_3 + 2g_2 + t_2)}{(t_1 + 2t_2 + t_3 + 2g_1 + 2g_2)} F L_{s,1}$$ Eq. 41

= (4.00+2*2.14+11.56)/(4.00+2*11.56+4.00+2*2.14+2*2.14)*5198*4.14 = 10759. N

$$M_{s,2} = \frac{(t_1 + 2g_1 + t_2)}{(t_1 + 2t_2 + t_3 + 2g_1 + 2g_2)} F L_{s,2}$$ Eq. 42

= (4.00+2*2.14+11.56)/(4.00+2*11.56+4.00+2*2.14+2*2.14)*5198*4.14 = 10759. N

M_{max} = 10759. N

$$F_{s,1} = \frac{(t_3 + 2g_2 + t_2)}{(t_1 + 2t_2 + t_3 + 2g_1 + 2g_2)} F$$ Eq. 45

= (4.00+2*2.14+11.56)/(4.0+2*11.56+4.00+2*2.14+2*2.14)*5198 =2599. N.

$$F_{s,2} = \frac{(t_1 + 2g_1 + t_2)}{(t_1 + 2t_2 + t_3 + 2g_1 + 2g_2)} F$$ Eq. 46

= (4.00+2*2.14+11.56)/(4.00+2*11.56+4.00+2*2.14+2*2.14)*9385 =2599. N.

Calculate Pin Stress Levels and RF's

With reference to PSM 5.3.11.4-01 fig 12

At the position of maximum pin bending

Applied [MPa]	**Allowable [MPa]**	**RF**
$f_{b,max} = M_{max}/Z$ = 18268/84.2= 217.	Ftu = 1103.	1103/(1.15*217) = 4.41
		No plastic bending used.

At the position of maximum shear and bending

Applied [MPa]	**Allowable [MPa]**	**RF**
$f_{bu,s} = M_s/Z$ = 10759/84.2 = 128.	Ftu = 1103.	1103/(1.15*128) = 7.50
$f_{su,avg} = F_s/A$= 2599/70.9 = 37.	Fsu = 655.	655/(1.15*37) = 15.53

Interaction of shear and bending PEM 5.3.11.4, Eq.51 & 52

$$Q_b = \frac{f_{bu,s}}{F_{tu}} \quad \text{and} \quad Q_s = \frac{f_{su,avg}}{F_{su}}$$ Q_b = 128/1103 = 0.116 Q_s = 37/655 = 0.0560

$$RF = \frac{1}{j\sqrt{Q_b^2 + Q_s^2}}$$ = 1/(1.15*SQRT(0.116^2 + 0.0560^2)) RF = 6.75

Critical load case: 3002

Failure mode: Pin bending at maximum moment

Critical ultimate RF **RF = >2.00**

2.5.15.4.5 Mid Support Bracket to Wing box Joint

The joint to the wing box is represented in FEM [15] by CBUSH fasteners. An overview of the joint arrangement is given in Figure 2-154.
Fastener strength data has been taken from ref. [4] For skin/flange thickness values which do not match standard sheet values, simple linear interpolation has been used. Joint fastener details and allowables are presented in Table 2-245.
Loading applied to the bracket includes T/E panel forces (section 2.3.5) and hinge interface loads ref. [13].
A summary of RF's is presented in Table 2-246

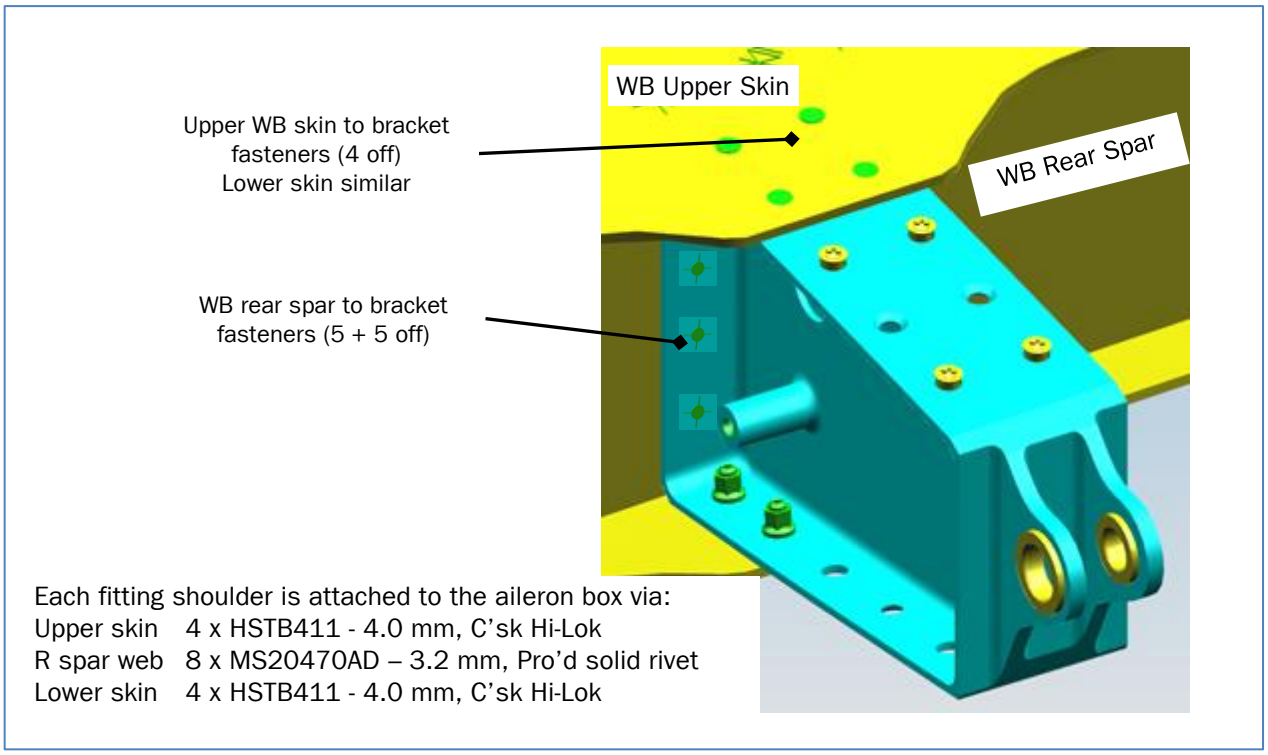

Figure 2-154 Mid support bracket to wing box joint details.

Joint Allowables

Allow Id	Part	Fastener Details				Shear Allow	Ultimate Allowables		
							Bracket Bearing		
		Type	Dash	Dia	No.		t_{rib}	Mat_{brk}	/Fastener
				mm		N.	mm		N.
A	WB Upper Skin	HSTB411	5	4.00	4	8920	2.0	2124-T851	6060
B	WB Rear Spar	MS20470AD	4	3.20	8	1730	1.6	2124-T851	Shear Crt
C	WB Lower Skin	HSTB411	5	4.00	4	8920	2.0	2124-T851	6060

Table 2-245 Mid support bracket, summary of fastener allowables.

Joint Ultimate RF Summary

A summary of RF's for the support bracket to wing box joints is presented in Table 2-246.

Location	Joint Ultimate RF vs Load Case						
	2001	3002	3003	3053	3054	4004	5005
WB Upper skin	15.03	2.03	6.10	121.19	121.19	2.28	2.27
WB Rear Spar	20.36	2.16	7.40	148.39	148.39	2.36	2.24
WB Lower Skin	19.06	2.01	6.11	122.43	122.43	2.21	2.05

Table 2-246 Summary of mid support bracket to WB joint ultimate RF's.

Critical load case: 3002
Failure mode: WB lower skin joint
Critical ultimate RF **RF = >2.00**
RF includes a Fitting Factor of 1.15

A worked example for the critical load case and fastener follows.

Joint Loading for the Critical Load Case

Fastener loading has been extracted from FEM [15]. Each fastener is represented by a CBUSH. Element orientation is such that:

CBUSH X & Y forces are "shear".
CBUSH Z forces axial.

Due to flexibility of the fitting backup structure[56], joint loads are assumed to be transferred by fastener shear alone. This assumption is enforced in FEM [15] by using a PBUSH axial stiffness of the 10. N./ mm.

Joint loading and associated RF's for the critical case (see RF summary Table 2-246) are presented in Table 2-247.

Joint	CBUSH Id	Applied Shear	Applied Axial	Allowable Id	Allowable Fastener	Allowable Bearing	RF
		N.			N.		
WB Upper Skin	11	2253.9	0.54	A	8920	6060	2.33
	12	2303.9	0.59	A	8920	6060	2.28
	13	2515.1	1.21	A	8920	6060	2.09
	14	2588.2	1.75	A	8920	6060	2.03
WB Rear Spar	21	599.2	-0.50	B	1730	Shear Crt	2.18
	22	577.0	-0.22	B	1730	Shear Crt	2.26
	23	582.2	0.20	B	1730	Shear Crt	2.24
	24	592.8	0.51	B	1730	Shear Crt	2.2
	25	604.3	-0.57	B	1730	Shear Crt	2.16
	26	572.9	-0.20	B	1730	Shear Crt	2.28
	27	581.7	0.29	B	1730	Shear Crt	2.24
	28	605.5	0.56	B	1730	Shear Crt	2.16
WB Lower skin	41	2320.8	-0.56	C	8920	6060	2.27
	42	2354.1	-0.51	C	8920	6060	2.23
	43	2564.7	-1.36	C	8920	6060	2.05
	44	2610.5	-1.32	C	8920	6060	2.01

Table 2-247 Mid support bracket, fastener (CBUSH) loading and RF's

Conservatively in addition to a 1.15 fitting factor, when the fastener is shear critical a 1.15 shear critical factor has been used in calculation the RF.

[56] the stiffness oft he backup structure is not modelled in FEM [15]

Worked Example

From Table 2-247

Critical RF (2.01) is associated with CBUSH 44 (WB lower skin)

Fastener ultimate loads for CBUSH 44 are:

Shear resultant force	= 2611. N.	
Axial force	= -1.3 N.	(negligible)

Fastener details for the skin/flange (from Table 2-245)

Fastener HSTB411 Hi-Lok, Dia.	= 4.0mm, C'sk head.	
Fastener shear allow.	= 8920. N.	
Bearing in support bracket	= 6060. N.	flange thickness = 2.0mm, alu 2124 T851

Joint allow is minimum of shear and bearing = 6060. N.

Joint is bearing critical

RF = Allowable/(Fitting Factor*Applied) =6060/(1.15*2611) RF = 2.01

2.5.15.5 Outboard Support Bracket

This section provides static strength substantiation for the aileron inboard support bracket. A simple overview of the bracket and wing box arrangement is shown in Figure 2-155 (below) and Figure 2-160.

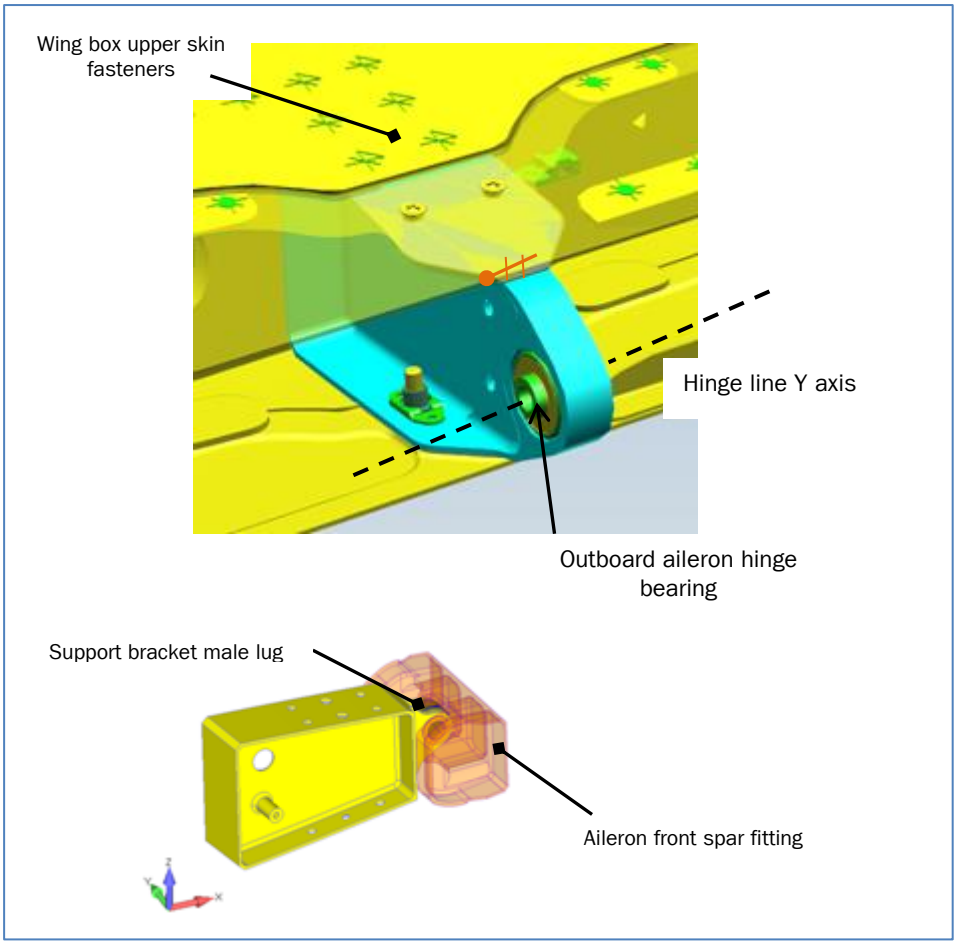

Figure 2-155 Outboard support bracket.

<u>Part Details</u>

Part No. 5572124373/74
Class 2 part B basis allowables used.
Aluminium , 2124-T851
Plate thickness, 50.81 - 76.20

2.5.15.5.1 OB Hinge Bearing Strength

Interface loading for the bearing is taken from ref. [13]. Loading is in the hinge coordinate system C2710001.

Bearing details:	Type	MS 27643-4 / MIL – B-7949
	Pilatus	940.83.38.602
	Outer dia:	22.9 mm
	Inner dia:	6.35 mm
Rating	Radial	8000. N.
	Axial	1300. N.

Load Case	Ultimate Radial Load		Ultimate Axial Load	
	Applied [N.]	RF	Applied [N.]	RF
2001	346.	>2.00	0.0	>2.00
3002	1881.	>2.00	0.0	>2.00
3003	400.	>2.00	0.0	>2.00
3053	15.	>2.00	1.5	>2.00
3054	15.	>2.00	1.5	>2.00
4004	1539.	>2.00	0.0	>2.00
5005	1744.	>2.00	0.0	>2.00

Table 2-248 OB hinge bearing strength.

2.5.15.5.2 OB Bracket Body Section Stress Levels

Bracket body stress levels have been determined using a linear FE approach. A brief overview of the FEM [16] is given in section 2.4.5.3.
For the purposes of determining section/flange strength RF's the FEM is divided into two[57] zones (FEMAP groups) see Figure 2-139.

Plain sections	RF's for:	
	Surface stress	max principal vs Ftu
	Surface stress	min principal vs. Ftu
	Flange/web centre stress	max principal vs Ftu
	Flange/web centre stress	min principal vs local buckling allowable
Fastener hole zones	RF's for:	
	Zone covered by joint analysis (section 2.5.15.5.5)	

<u>Tension Allowable</u>
All applied tension stresses are compared against Ftu.

Ftu = 469 MPa

<u>Compression Allowables</u>
The allowable for compression stresses is dependent on the location within the bracket and if the location can be considered as a compact section.

The maximum "b/t" = 21.3/1.6 = 12.7 mm (lower flanges)

b/t > 7.0[58] , therefore the flanges cannot be considered as a compact section.

A dual strategy is employed to cover local buckling without being overly conservative at localised compression zones.

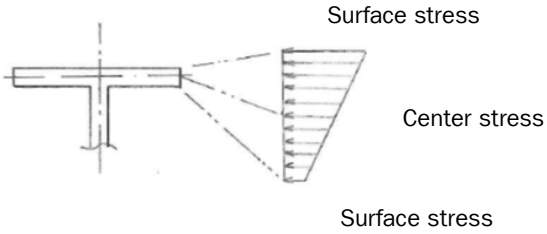

All surface stresses are considered as localized/compact and are compared against Ftu.
All flange/web centres use a single local buckling allowable base on the worst b/t value.

[57] Max FEMpeak stress <Ftu, therefore no Neuber correction or separate Kt group required.
[58] PSM 5.34.3.1, Introduction

Local Buckling Compression Allowable

The bracket sections are assumed to be subject to uniform compression stresses. The local buckling allowable will be based on flange crippling, ref. PSM 5.3.4.3-01.

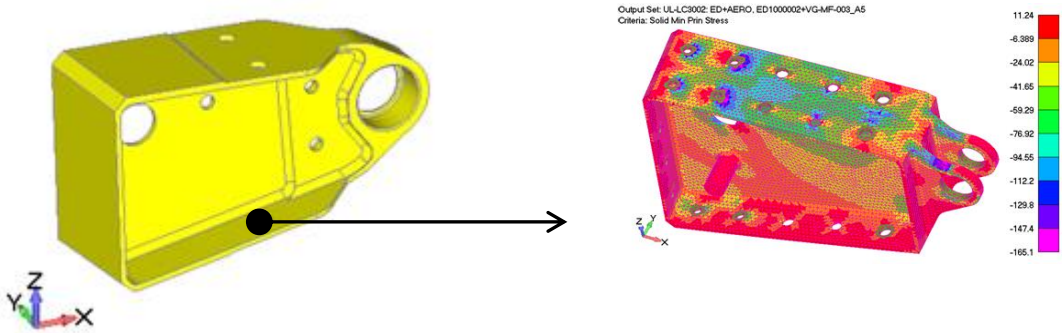

b1a	= 21.3 mm	
t1	= 1.6 mm	
t2	= 2.0 mm	
r	= 2.5 mm	
b1a.eff	= 20.3 mm	
Ki	= 0.41	(simple supports)

$x_i = \frac{b_{i,eff}}{t_i}\sqrt{\frac{F_{cy}}{K_i E_c}}$ =(20.3/1.6)*SQRT(414/(0.41*75200) = 1.47 Eq. 5.3.4.3-2

$y_i = 1.40 - 0.628x_i$ = 1.4 - 0.628*1.47 = 0.53

$F_{cc,I} = y_i * Fcy$ = 0.531*414. = 219.6 MPa Eq. 5.3.4.3-1

Fcc =219.6 MPa

Local Buckling of Free Flange Allowable

Assume a uniform stress along flange short edge

Assume three edges simple support, one edge free

Ref. PSM 5.3.5.3

b	= 21.3mm	
t	= 1.6 mm	
K	= 0.3	PSM Fig 5.3.5.3-11, FSSS curve
E	= 75200 MPa	2125 T8511
ν	= 0.33	2125 T8511

$F_{cr} = \frac{\eta_p \eta_{cl} \pi^2 K E_c}{12(1-\nu_m^2)}\left(\frac{t}{b}\right)^2$ = [1.0*1.0*Π^2*0.3*75200/12*(1.0 - .33^2)]*(1.6/21.2)^2

Fcr = 117.5 MPa

Fcr/Fcy = 117.5/414 = 45%. No plastic correction required.

To supplement the above rational a FE linear buckling analysis has been performed on three critical load cases; results are presented in section 2.5.15.5.3.

Ultimate Strength Summary Tables

M/C Body Plain Section (Surface) Stress Levels											
Loading		Maximum Principal					Minimum Principal				
Group	Case	Output Vector	Applied MPa	Allow Type	Allow MPa	RF	Output Vector	Applied MPa	Allow Type	Allow MPa	RF
ED + Aero	2001	7026	10.1	Ftu	469	46.38	7027	-9.4	Ftu	469	49.91
	3002	7026	60.4	Ftu	469	7.76	7027	-58.2	Ftu	469	8.05
	3003	7026	8.8	Ftu	469	53.18	7027	-6.7	Ftu	469	70.03
	4004	7026	58.6	Ftu	469	8.01	7027	-55.9	Ftu	469	8.40
	5005	7026	80.0	Ftu	469	5.86	7027	-51.9	Ftu	469	9.04
Inertia	3053	7026	0.8	Ftu	469	578.33	7027	-0.8	Ftu	469	574.70
	3054	7026	0.8	Ftu	469	574.70	7027	-0.8	Ftu	469	578.33

Table 2-249 Summary of RF's for OB bracket plain sections, surface ultimate stress levels.

Applied ultimate stress: 80.0 MPa
Allowable stress: Ftu 469. MPa
Location: see Figure 2-156
Critical case: 5005

Critical ultimate RF = >2.0

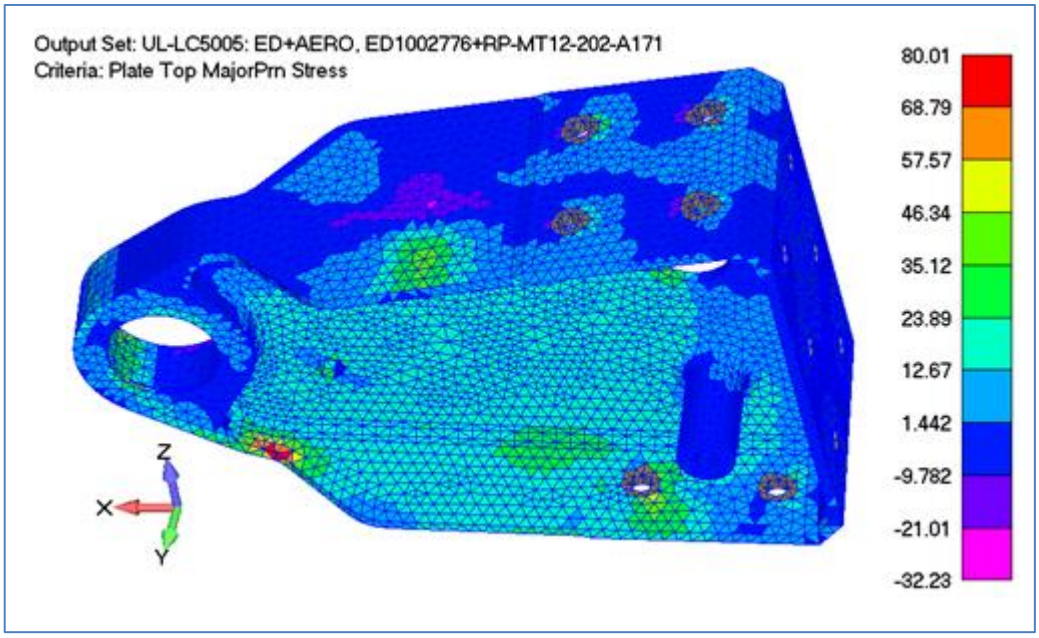

Figure 2-156 OB bracket plain sections, surface stress levels: major principal stress.

M/C Body Plain Section (Centre) Stress Levels											
Loading		Maximum Principal					Minimum Principal				
Group	Case	Output Vector	Applied MPa	Allow Type	Allow MPa	RF	Output Vector	Applied MPa	Allow Type	Allow MPa	RF
ED + Aero	2001	60016	8.4	Ftu	469	55.52	60017	-8.0	Fcr	117	14.63
	3002	60016	48.9	Ftu	469	9.59	60017	-52.1	Fcr	117	2.25
	3003	60016	7.0	Ftu	469	66.80	60017	-5.0	Fcr	117	23.57
	4004	60016	44.2	Ftu	469	10.61	60017	-48.2	Fcr	117	2.44
	5005	60016	71.4	Ftu	469	6.57	60017	-48.4	Fcr	117	2.43
Inertia	3053	60016	0.7	Ftu	469	658.48	60017	-0.7	Fcr	117	162.09
	3054	60016	0.7	Ftu	469	647.02	60017	-0.7	Fcr	117	164.96

Table 2-250 Summary of RF's for OB bracket plain sections, flange centre stress levels.

Applied ultimate stress: -52.1 MPa
Allowable stress: Fcc 117. MPa
Location: see Figure Figure 2-157
Critical case: 3002

Critical RF = >2.0

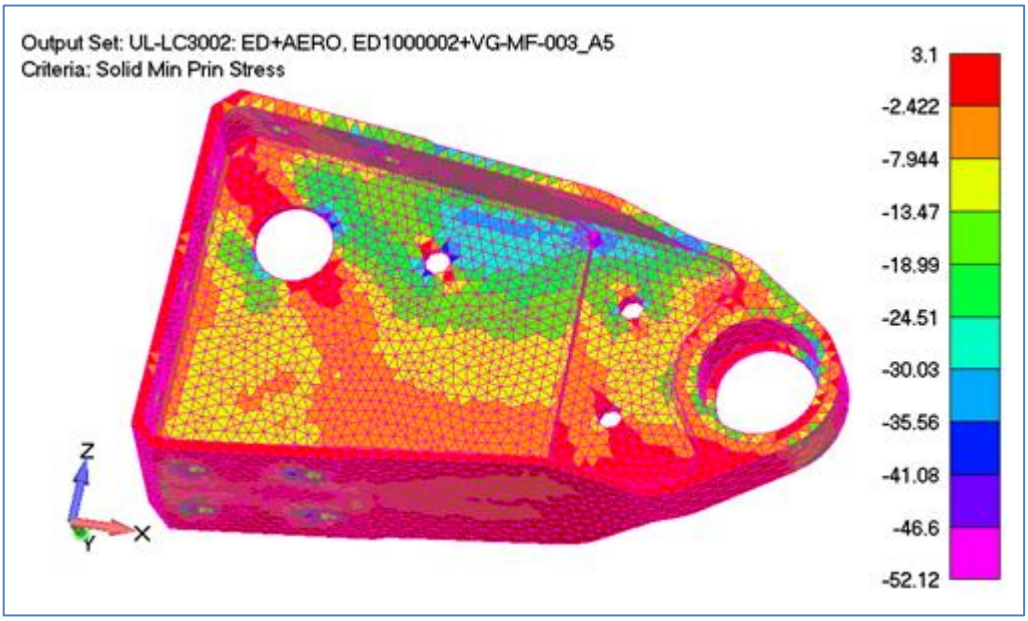

Figure 2-157 OB bracket plain sections, flange centre stress levels: minimum principal stress, FEM [16]

2.5.15.5.3 OB Bracket Body FE Linear Buckling Check

In addition to checking section compression stress levels against a local flange crippling allowable a FE linear buckling analysis has been performed. Boundary conditions and loading are as the static strength checks. I.e. extracted eigenvalues are relative to ultimate loads. From inspection of TableTable 2-249, one critical load case has been identified.
A summary is presented below and the mode shape in Figure 2-158

Buckling criteria: No buckling at < Ultimate Loads

FEM[16] is primarily intended for static strength analysis. Mesh density combined with the use of CTET10 elements will result in over estimation of buckling eigenvalues. The analysis should be considered as a supplement/"safety check" of the local buckling allowable used in the previous section.

Load Case	Eigenvalue	RF
3002 ED1000002+VG-MF-003_A5 [0ail0tab]	50.9	>2.00

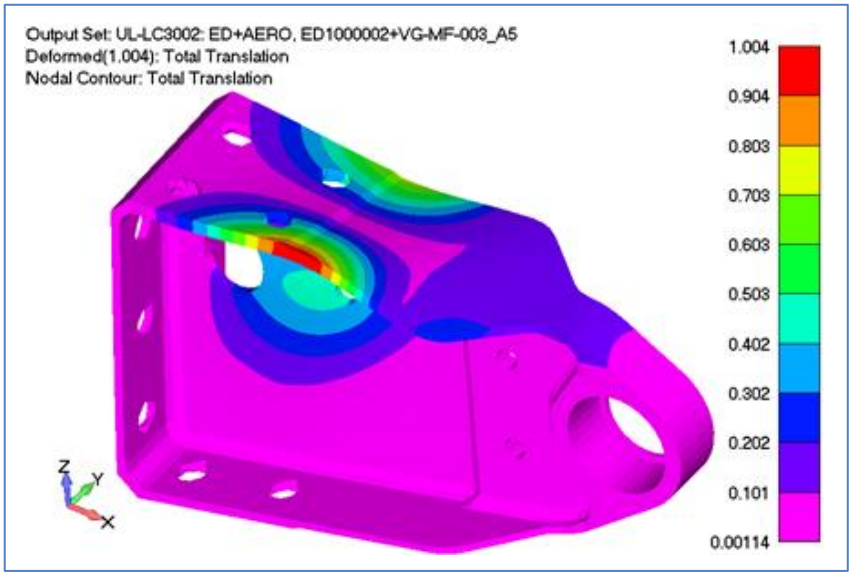

Figure 2-158 OB bracket linear buckling 1st mode, critical ED + Aero case (3002)

2.5.15.5.4 OB Support Bracket Hinge Lug Strength

The bracket supports the outboard end of the aileron via a single male lug and pin see Figure 2-155. Loading for the hinged joint is taken from aileron interface report ref [13]
Interface loads from ref. [13] are presented in the A/C and aileron hinge coordinates. For the lug analysis, loading relative to the lug axis is required. A local lug coordinate C1001 has been defined; it can be seen at the centre of the lug bore in Figure 2-159. It should be noted that unlike the aileron hinge coordinate it does not rotate with aileron position. Interface loads for the lug are presented in Table 2-251.

A/C coordinate system							
Load Case	Aero Pressure + Wing Bending					Inertia	
	2001	3002	3003	4004	5005	3053	3054
LIMIT [N.]							
Fx	48	22	244	53	277	0	0
Fy	-12	92	14	78	105	-3	3
Fz	-226	1251	-106	1022	1125	-15	15
$[Fx,Fz]_{res}$	231	1251	266	1023	1158	15	15
ULTIMATE [N.]							
Fx	71	33	367	79	415	0	0
Fy	-18	138	21	117	158	-4	4
Fz	-339	1876	-159	1533	1687	-23	23
$[Fx,Fz]_{res}$	346	1876	400	1535	1737	23	23

Bracket Lug coordinate system							
Load Case	Aero Pressure + Wing Bending					Inertia	
	2001	3002	3003	4004	5005	3053	3054
ULTIMATE [N.]							
Fx	-73	-25	-369	-73	-410	0	0
Fy	0	0	0	0	0	2	-2
Fz	-339	1881	-155	1538	1696	-23	23
$[Fx,Fz]_{res}$	347	1881	400	1539	1744	23	23

Table 2-251 Outboard support bracket interface loads.

The analysis for the lug is carried out by PSM 5 3 11 4_01.xlsm. This is an approve tool for use on the PC-24 project; as such a fully detailed worked example is not required. However for the critical case all input data is presented to enable independent verification. Pin analysis follows PSM 5.3.4.11, section 5.3.11.4.9.
Material strength data is given below and dimensional data in Figure 2-153.

Lug Material
Material = 2124-T851
Basis = B
Ftu = 469.0 MPa
Fty = 421.0 MPa
Fcy = 414.0 MPa
Fbry15 = 586.0 MPa
Fbry20 = 683.0 MPa

Pin Material
Material = A286 steel
Basis = B
Ftu = 1103.0 MPa
Fsu = 655.0 MPa

Bush Material
Design uses a spherical bearing, hence no lug bush.

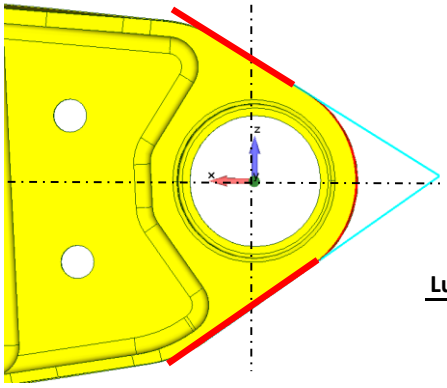

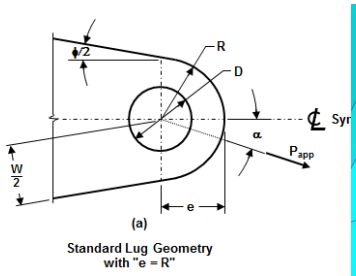

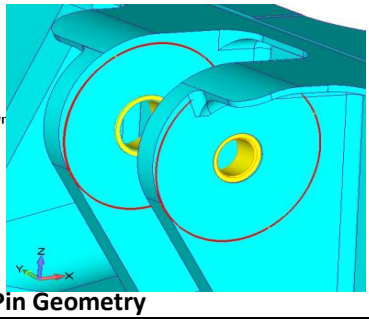

Lug Geometry

D =	22.90	mm
DPO =	6.33	mm
t =	12.84	mm
e =	15.20	mm
R =	15.20	mm
W/2 =	15.20	mm
phi =	67.00	deg

Bush Geometry

Di,bh =	6.35	mm
Do,bh =	22.90	mm

Pin Geometry

Dia =	6.33	mm
t1 =	2.50	mm
g1 =	4.73	mm
t2 =	12.84	mm
g2 =	4.73	mm
t3 =	2.50	mm

Shoulder in lug bore has been ignored

Figure 2-159 Outboard aileron support bracket, idealized lug and pin dimensions.

A summary of RF's is presented in Table 2-252

Criteria	Lug & Pin Ultimate Reserve Factors vs Load Case Id						
	Aero Pressure + Wing Bending					Inertia	
	2001	3002	3003	4004	5005	3053	3054
Lug strg	132.26	28.12	92.03	34.37	25.78	2310.82	2310.82
Pin Strg	14.96	2.76	12.96	3.37	2.97	226.47	226.47

Table 2-252 Summary of OB support bracket lug and pin RF's.

Lug
Critical Load Case = 5005
Failure mode Tension strength ultimate

RF = >2.0
RF includes a fitting factor of 1.15

Pin
Critical Load Case 3002
Failure mode Bending

RF = >2.0
RF includes a fitting factor of 1.15

Summary of Lug Input – Output Data for Critical Case

Loading

Load Case =	5005		
Safety Factor =	1.50		
		Ult	Limit
Axial Load[59]	P_{ax} =	410.	273. N.
Transverse Load	P_{tr} =	1696.	1130. N.
Resultant Load	P_{app} =	1744.	1163. N
Alpha =		76.4	76.4 deg.

Lug RF Summary from PSM 5 3 11 4_01.xlsm

Failure mode	Applied [N.]	Allowable [N.]	RF
Tension strength ultimate , P_{tu}	1744	51723..	25.78
Tension strength limit, P_{ty}	1163.	40564.	30.33
Lug net section tension strength limit, $P_{ty,ns}$	1163.	40564.	30.33
Lug bearing strength limit, P_{bry}	1163.	35499.	26.54
Bush bearing strength limit, P_{bry}			N/A

Failure mode = Tension strength limit **RF = >2.00**

RF includes a Fitting Factor of 1.15

Worked Example for Critical Pin RF

Calculate moment arms and section properties

$L_1 = \left\{\frac{t_1}{2} + g_1 + \frac{t_2}{4}\right\}$ = {2.50/2+4.73+12.84/4} = 9.19 mm Eq. 28

$L_2 = \left\{\frac{t_3}{2} + g_2 + \frac{t_2}{4}\right\}$ = {2.50/2+4.73+12.84/4} = 9.19 mm Eq. 29

$L_{s,1} = \left\{\frac{t_1}{2} + g_1\right\}$ = {2.50/2+4.73} = 5.98 mm

$L_{s,2} = \left\{\frac{t_3}{2} + g_2\right\}$ = {2.50/2+4.73} = 5.98 mm

$A = \frac{\pi \cdot D_{po}^2}{4}$ = Π*6.33^2/4 = 31.4 mm2 Eq. 49

$Z = \frac{\pi \cdot D_{po}^3}{32}$ = Π*6.33^3/32 = 24.8 mm3 Eq. 35

Calculate Pin Bending Moments and Shear Forces

Ultimate applied pin load = 1881 N.
Load case = 3002

$$M_{max,1} = \frac{(t_3 + 2g_2 + t_2)}{(t_1 + 2t_2 + t_3 + 2g_1 + 2g_2)} F L_1$$ Eq. 30

= (2.50+2*4.73+12.84)/(2.50+2*12.84+2.50+2*4.73+2*4.73)*1881*9.19 = 8645. N

[59] Always considered as a lug tension load, irrespective of sign.

$$M_{max,2} = \frac{(t_1 + 2g_1 + t_2)}{(t_1 + 2t_2 + t_3 + 2g_1 + 2g_2)} F L_2$$ Eq. 31

= (2.50+2*4.73+12.84)/(2.50+2*12.84+2.50+2*4.73+2*4.73)*1881*9.19 = 8645. N

M_{max} = 8645. N.

$$M_{s,1} = \frac{(t_3 + 2g_2 + t_2)}{(t_1 + 2t_2 + t_3 + 2g_1 + 2g_2)} F L_{s,1}$$ Eq. 41

= (2.50+2*4.73+12.84)/(2.50+2*12.84+2.50+2*4.73+2*4.73)*1881*5.98 = 5625. N

$$M_{s,2} = \frac{(t_1 + 2g_1 + t_2)}{(t_1 + 2t_2 + t_3 + 2g_1 + 2g_2)} F L_{s,2}$$ Eq. 42

= (2.50+2*4.73+12.84)/(2.50+2*12.84+2.50+2*4.73+2*4.73)*1881*5.98 = 5625. N

M_{max} = 5625. N

$$F_{s,1} = \frac{(t_3 + 2g_2 + t_2)}{(t_1 + 2t_2 + t_3 + 2g_1 + 2g_2)} F$$ Eq. 45

= (2.50+2*4.73+11.56)/(4.0+2*11.56+4.00+2*2.14+2*2.14)*1881 = 941. N.

$$F_{s,2} = \frac{(t_1 + 2g_1 + t_2)}{(t_1 + 2t_2 + t_3 + 2g_1 + 2g_2)} F$$ Eq. 46

= (4.00+2*2.14+12.84)/(2.50+2*12.84+2.50+2*4.73+2*4.73)*1881 = 941. N.

Calculate Pin Stress Levels and RF's

With reference to PSM 5.3.11.4-01 fig 12

At the position of maximum pin bending

Applied [MPa]		**Allowable [MPa]**	**RF**	
$f_{b,max} = M_{max}/Z$ = 8645/24.8	= 349.	Ftu = 1103.	1103/(1.15*349)	= 2.75

No plastic bending used.

At the position of maximum shear and pin bending

Applied [MPa]		**Allowable [MPa]**	**RF**	
$f_{bu,s} = M_s/Z$ = 5625/24.8	= 226.	Ftu = 1103.	1103/(1.15*226)	= 4.23
$f_{su,avg} = F_s/A$= 941/31.4	= 30.	Fsu = 655.	655/(1.15*30)	= 19.01

Interaction of shear and bending PEM 5.3.11.4, Eq.51 & 52

$$Q_b = \frac{f_{bu,s}}{F_{tu}} \quad \text{and} \quad Q_s = \frac{f_{su,avg}}{F_{su}}$$ Q_b = 226/1103 = 0.205 Q_s = 30/655 = 0.0457

$$RF = \frac{1}{j\sqrt{Q_b^2 + Q_s^2}}$$ = 1/(1.15*SQRT(0.205^2 + 0.0458^2)) RF = 4.13

Critical load case: 3002

Failure mode: Pin bending at maximum moment

Critical ultimate RF **RF = >2.00**

RF includes a Fitting Factor of 1.15

2.5.15.5.5 OB Support Bracket to Wing box Joint

The joint to the wing box is represented in FEM [16] by CBUSH fasteners. An overview of the joint arrangement is given in Figure 2-160.
Fastener strength data has been taken from ref. [4]. For skin/flange thickness values which do not match standard sheet values, simple linear interpolation has been used. Joint fastener details and allowables are presented in Table 2-253.
Loading applied to the bracket includes T/E panel forces (section 2.3.5) and hinge interface loads ref. [13].
A summary of RF's is presented in Table 2-254.

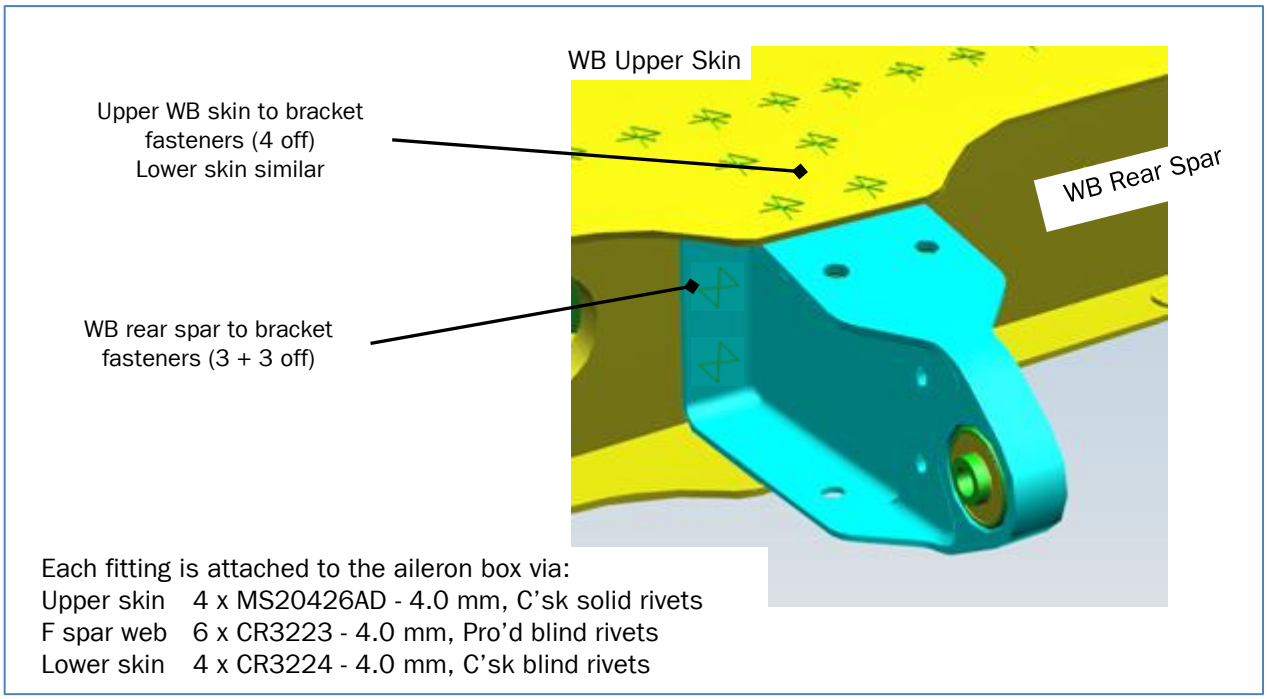

Figure 2-160 OB support bracket to wing box joint details.

Joint Allowables

Allow Id	Part	Fastener Details				Shear Allow	Ultimate Allowables		
							Bracket Bearing		
		Type	Dash	Dia	No.		t_{rib}	Mat_{brk}	/Fastener
				mm		N.	mm		N.
A	WB Upper Skin	MS20426AD	5	4.00	4	2558	2.7	2124-T851	Shear Crt
B	WB Rear Spar	CR3223	5	4.00	6	4456	2.0	2124-T851	3360
C	WB Lower Skin	CR3224	5	4.00	4	4580	2.0	2124-T851	2625

Table 2-253 OB support bracket, summary of fastener allowables.

Joint RF Summary

A summary of RF's for the support bracket to wing box joints is presented in Table 2-254.

Location	Joint Ultimate RF vs Load Case						
	2001	3002	3003	3053	3054	4004	5005
WB Upper skin	13.16	2.45	16.66	189.99	189.99	2.97	2.64
WB Rear Spar	70.95	11.20	133.91	1055.55	1055.55	13.25	11.87
WB Lower Skin	18.08	2.78	118.67	216.36	216.36	3.31	2.79

Table 2-254 Summary of IB support bracket to WB joint RF's.

Critical load case: 3002
Failure mode: WB upper skin
Critical ultimate RF **RF = >2.00**
RF includes a Fitting Factor of 1.15

A worked example for the critical load case and fastener follows.

Joint Loading for the Critical Load Case

Fastener loading has been extracted from FEM [16]. Each fastener is represented by a CBUSH. Element orientation is such that:

CBUSH X & Y forces are "shear"
CBUSH Z forces axial.

Due to flexibility of the fitting backup structure[60], joint loads are assumed to be transferred by fastener shear alone. This assumption is enforced in FEM [16] by using a PBUSH axial stiffness of the 10. N./ mm.

Joint loading and associated RF's for the critical case (see RF summary Table 2-254) are presented in Table 2-255.

Joint	CBUSH Id	Applied Shear (N.)	Applied Axial (N.)	Allowable Id	Allowable Fastener (N.)	Allowable Bearing (N.)	RF
WB Upper Skin	11	713.7	0.02	A	2558	Shear Crt	2.71
	12	716.4	0.02	A	2558	Shear Crt	2.69
	13	774.7	0.03	A	2558	Shear Crt	2.49
	14	787.3	0.07	A	2558	Shear Crt	2.45
WB Rear Spar	21	260.8	-0.01	B	4456	3360	11.20
	22	251.9	0.00	B	4456	3360	11.59
	23	258.9	0.02	B	4456	3360	11.28
	24	237.6	-0.01	B	4456	3360	12.29
	25	229.3	0.00	B	4456	3360	12.74
	26	245.1	0.01	B	4456	3360	11.92
WB Lower skin	41	745.5	-0.02	C	4580	2625	3.06
	42	718.3	-0.02	C	4580	2625	3.17
	43	819.9	-0.05	C	4580	2625	2.78
	44	774.9	-0.04	C	4580	2625	2.94

Table 2-255 OB support bracket, fastener (CBUSH) loading and RF's

In addition to a 1.15 fitting factor, when the fastener is shear critical a 1.15 shear critical factor has been used in calculating the RF.

[60] the stiffness oft he backup structure is not modelled in FEM [15]

Worked Example

From Table 2-255

Critical RF (2.45) is associated with CBUSH 14 (WB upper skin)

Fastener ultimate loads for CBUSH 14 are:

Shear resultant force	= 787.3 N.	
Axial force	= 0.07 N.	(negligible)

Fastener details for the skin/flange (from Table 2-253)

Fastener MS20426AD, Dia.	= 4.0mm, C'sk head.
Fastener shear allow.	= 2558. N.
Bearing in support bracket	= Shear critical. N.

Joint allow is minimum of shear and bearing = 2558. N.

Joint is shear critical, ∴ shear joint factor of 1.15 is applicable

RF = Allowable/(Shear Factor*Fitting Factor*Applied)

= 2558/(1.15*1.15*787.3) RF = 2.45

3 LIST OF RESERVE FACTORS

List of Reserve Factors (FOR STRESS REPORTS ONLY)
Reserve Factors for all the Aileron and Trim Tab Strucutre are shown in the following tables.
Legend:
PBI Passed by inspection

3.1 Aileron Box Upper Skin

Part Numbers: Table 1-2

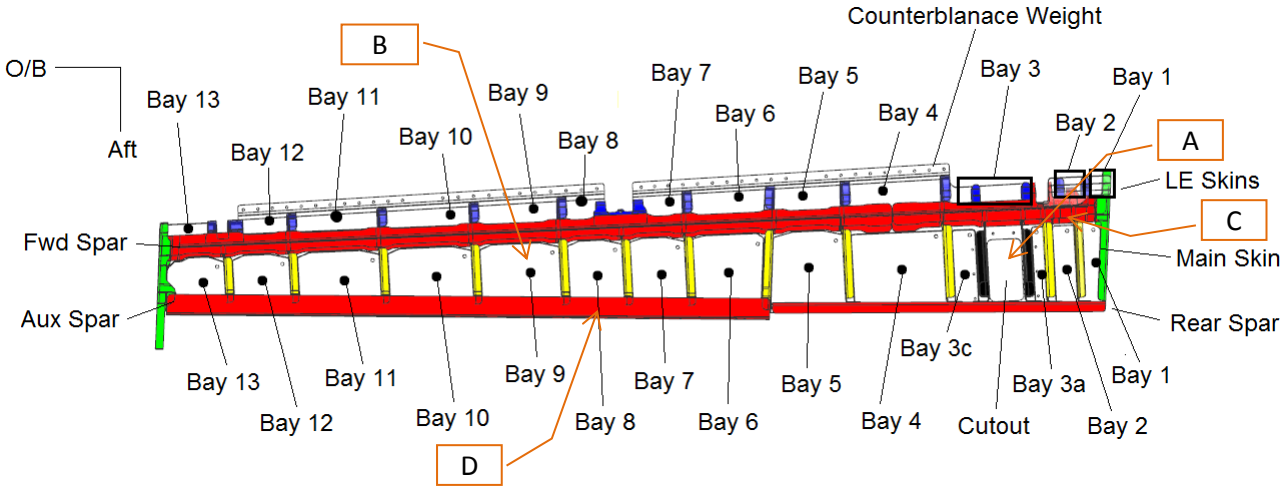

Figure 3-1 Aileron Upper Box Skin Minimum RF Locations

Item	Location	Load Case	Criterion	Load or Stress		RF	Page	Remarks
				Actual	Allowable			
Box Upper Skin	A	3002	Strength	101.7 MPa	276.0 MPa	>2.00	160	Bay 3
Box Upper Skin	B	5005	Buckling		Inter[Shear-comp]	1.24	162	Bay 9, Relative to LL
Box US-Fspar, joint	C	3002	Bearing	39.2 N/mm	61.8 N/mm	1.57	174	Joint bay 2
Box US - Rspar	D	5005	Bearing	24.8 N/mm	36.0 N./mm	1.45	177	Joint bay 8

Table 3.1-1 Aileron Upper Box Skins RF Summary

Note:

3.2 Aileron Box Lower Skin

Part Numbers: Table 1-3

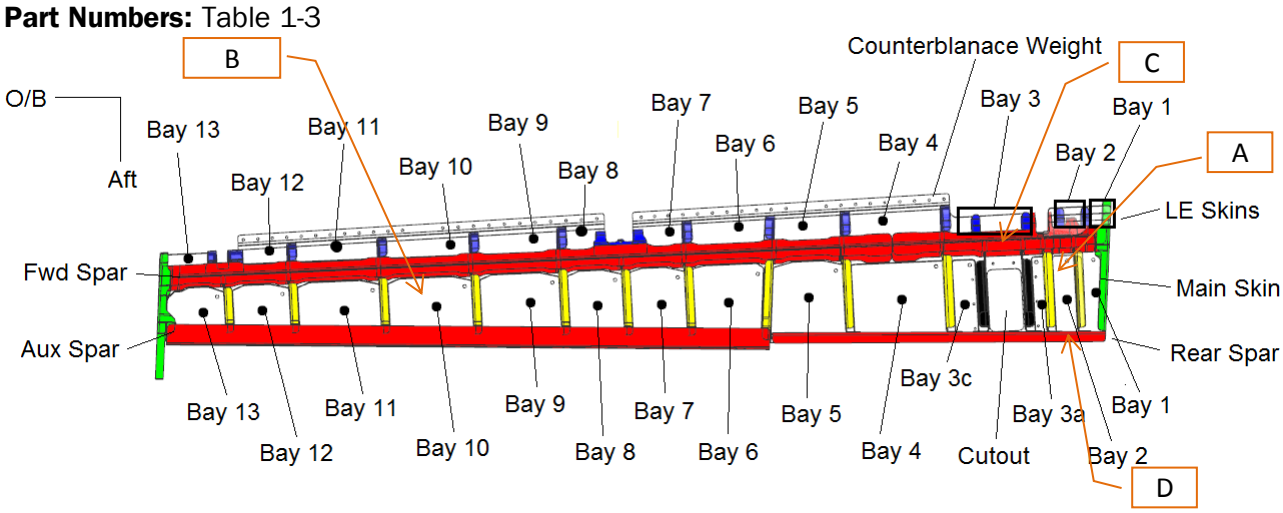

Figure 3-2 Aileron Lower Box Skin Minimum RF Locations

Item	Location	Load Case	Criterion	Load or Stress		RF	Page	Remarks
				Actual	Allowable			
Box Lower Skin	A	3003	Strength	118.8 MPa	276.0 MPa	>2.00	185	Bay 2
Box Lower Skin	B	3002	Buckling		Inter[Shear-comp]	1.70	188	Bay 10, Relative to LL
Box LS - Fspar	C	5005	Bearing	73.7 N/mm	108.8 N/mm	1.47	193	Joint bay 3
Box LS - Rspar	D	4004	Bearing	64.9 N/mm	93.7 N/mm	1.44	196	Bay 2

Table 3.2-1 Aileron Lower Box Skins RF Summary

3.3 Aileron Front Spars

Part Numbers: Table 1-4

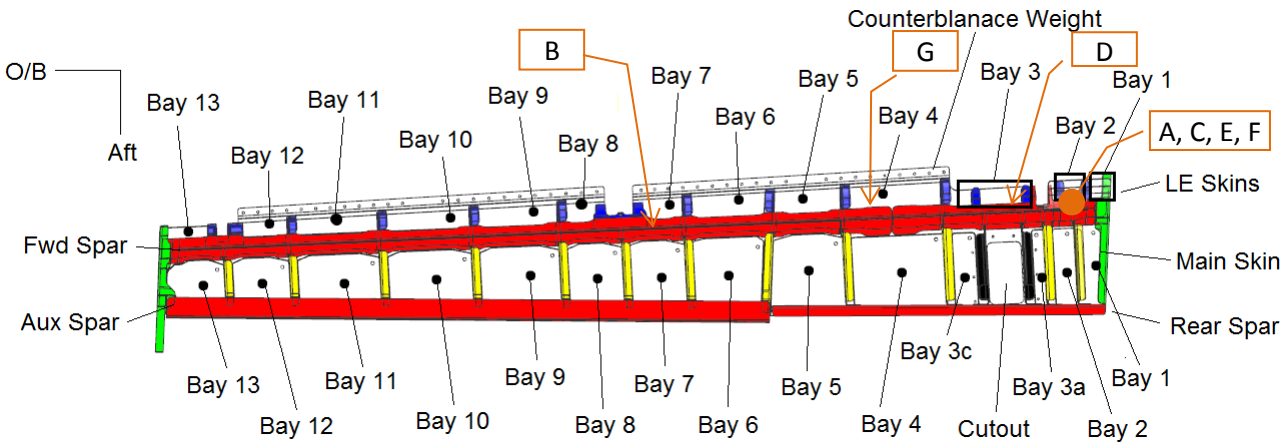

Figure 3-3 Front Spar Minimum RF Locations

Item	Location	Load Case	Criterion	Load or Stress		RF	Page	Remarks
				Actual	Allowable			
Front Spar	A	3002	Strength (plain section)	195.5 MPa	365. MPa	1.86	74	Bay 1 - 2
Front Spar	B	5005	Buckling		Inter[Shear-comp]	>2.00	77	Bay 7
Front spar L. cap	C	3002	IR buckling	288. MPa	198.6 MPa	1.45	86	Bay 2
Front spar U. cap	D	5056		206.8 MPa	214. MPa	1.03	89	Bay 3
IB Hinge lugs	E	3002	Lug strength	8538. N.	35842. N.	>2.00	107	FF = 1.15
Front spar control arm	F	6086	Lug strength	9471. N.	81638. N.	>2.00	112	FF = 1.15
Front spar splice	G	5005	Joint fasteners Bearing Strg	351. N	1560. N.	>2.00	104	Bay 4

Table 3.3-1 Aileron Front Spar RF Summary Note:
RF includes a 1.15 fitting factor / Ultimate factor wherever applicable

3.4 Front Spar Hinge Fittings

Part Numbers: Table 1-8

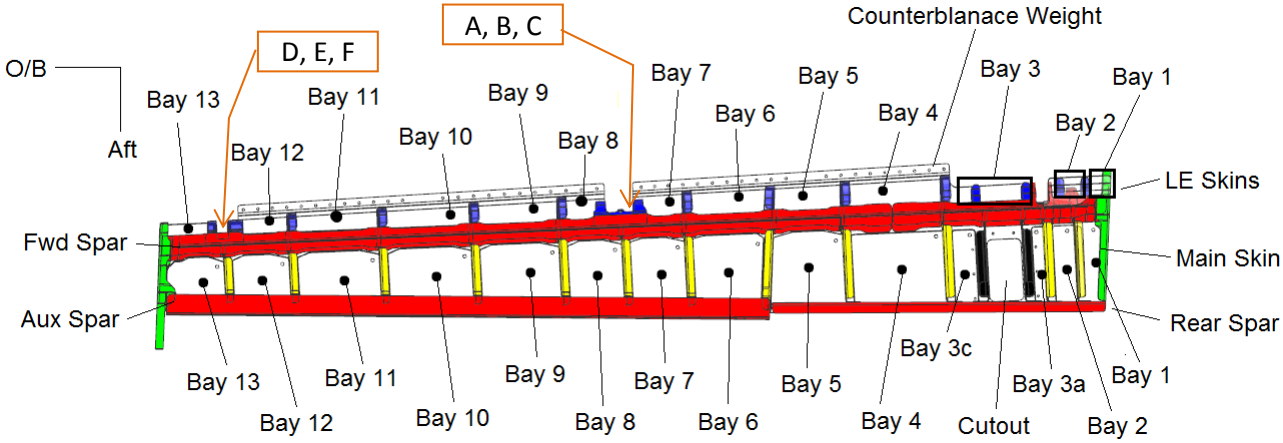

Figure 3-4 Front Spar Hinge Fittings Minimum RF Locations

Item	Location	Load Case	Criterion	Load or Stress		RF	Page	Remarks
				Actual	Allowable			
Mid hinge fitting Central zone	A	3002	Strength	440.3 MPa	462.0 MPa	1.05	122	Allow = Ftu
Mid hinge fitting Outer flanges	B	3002	Strength	111.2 MPa	215.0 MPa	1.93	125	Allow = Fcc
Mid hinge fitting Joint:Front Spar	C	3002	Fastener bearing	1562.6 N.	3480. N.	1.93	128	
OB hinge fitting	D	3002	Strength	103.6 MPa	197.0 MPa	1.90	135	Allow = Fcc
OB hinge fitting Lugs	E	5005	Lug strength	1129. N.	34941. N.	>2.00	138	
OB hinge fitting Joint:Front Spar	F	3002	Fastener bearing	1116. N.	3480. N.	>2.00	141	

Table 3.4-1 Front Spar Hinge Fittings RF Summary

3.5 Aileron Rear Spar

Part Numbers: Table 1-8

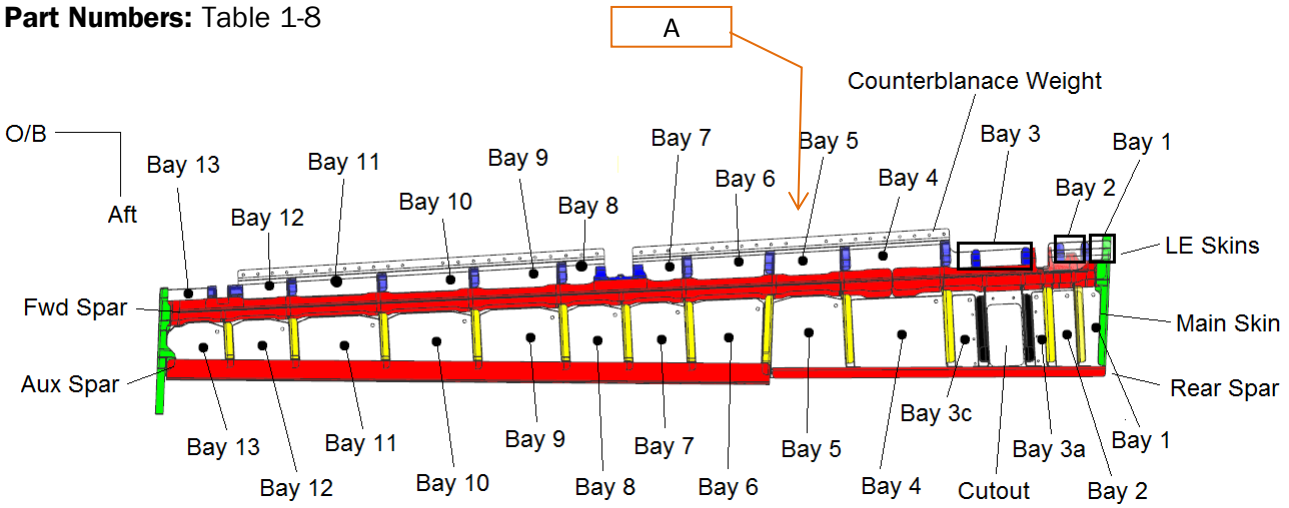

Figure 3-5 Spar Bays Minimum RF Locations

Item	Location	Load Case	Criterion	Load or Stress		RF	Page	Remarks
				Actual	Allowable			
Rear Spar	A	3002	Strength (plain section	151.9 MPa	427. MPa	>2.00	146	Bay 3b
Rear Spar	B	4004	Buckling		Inter[Shear-comp]	>2.00	149	Bay 3a

Table 3.5-1 Aileron Rear Spar RF Summary

3.6 Aileron Box Ribs

Part Numbers: Table 1-6

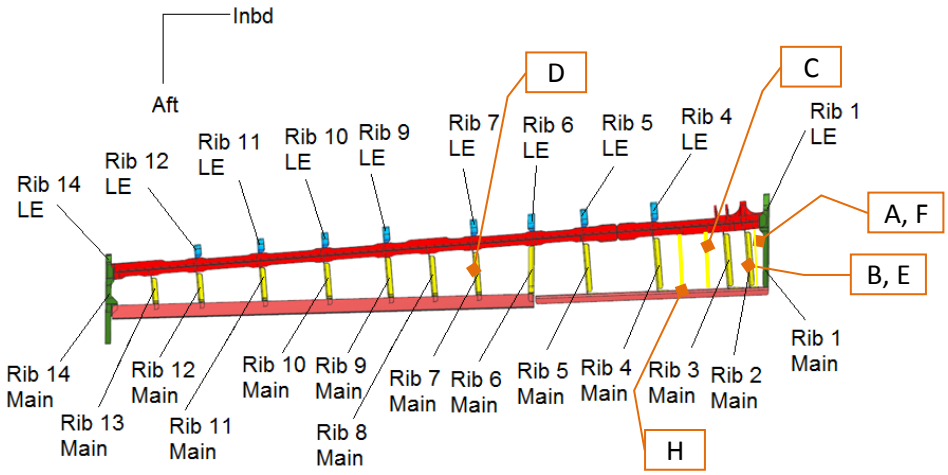

Figure 3-6 Main and Nose Ribs Minimum RF Locations

Item	Location	Load Case	Criterion	Load or Stress		RF	Page	Remarks
				Actual	Allowable			
Box Ribs	A	3003	Strength	100.9 MPa	283.0 MPa	>2.00	205	Rib 1a, Fcy
Box Ribs webs	B	4004	Hole stress		Inter[Shear-comp]	>2.00	208	Rib 2
Box Ribs flanges	C	3002	IRB	321.2 MPa	162.2 MPa	1.98	212	Rib 2a
Rib–USkin, joint	D	5005	Bearing	10.8 N/mm	56.2 N/mm	>2.00	216	Rib 7
Rib-LSkin, joint	E	4004	Bearing	12.9 N/mm	76.3 N/mm	>2.00	221	Rib 2
Rib-Fspar, joint	F	6086	Bearing	4628. N.	4760. N.	1.02	224	Rib 1a
Rib-Rspar, joint	H	4004		1024. N.	1700. N.	1.44	239	Rib 2b

Table 3.6-1 Aileron Box Ribs RF Summary.

3.7 Trailing Edge

Part Numbers: Table 1-7

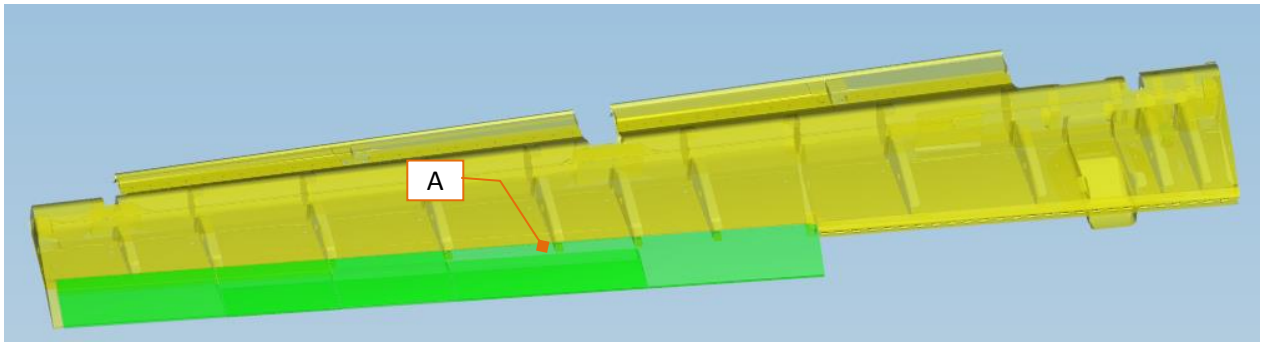

Figure 3-7 Main and Nose Ribs Minimum RF Locations

Item	Location	Load Case	Criterion	Load or Stress		RF	Page	Remarks
				Actual	Allowable			
Panel TE2	A	5005 + Thermal envelope	IRB	74.0 MPa	77.5 MPa	1.04	297	Limit RF

Table 3.7-1 CFRP Trailing Edge

3.8 Trim Tab

Part Numbers: Error! Reference source not found.

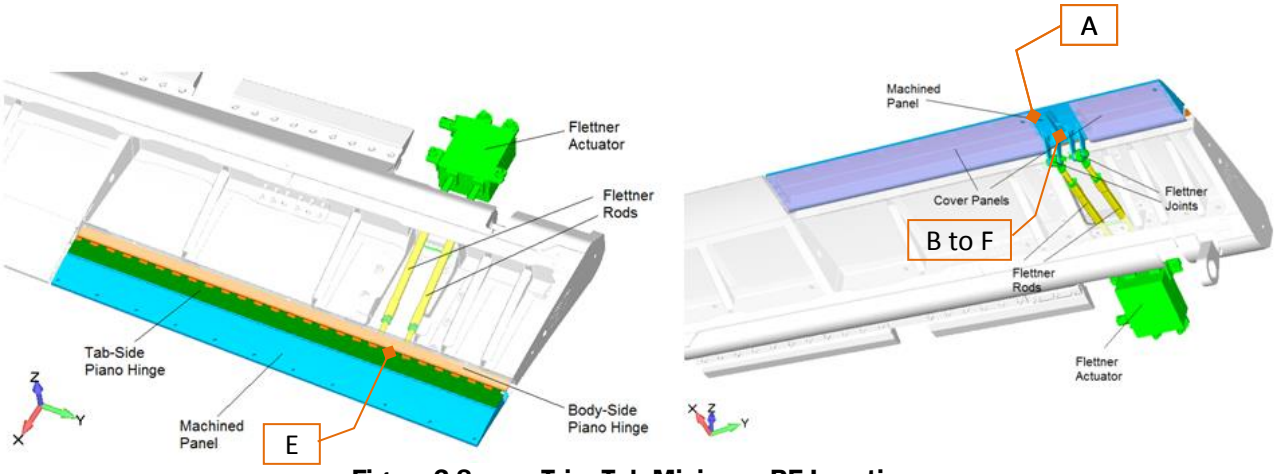

Figure 3-8 Trim Tab Minimum RF Locations

Item	Location	Load Case	Criterion	Load or Stress		RF	Page	Remarks
				Actual	Allowable			
M/C Body OB pocket	A	3003	Strength	416. MPa	448. MPa	1.08	316	Ultimate RF
M/C Body Centre "block"	B	3003	Strength	382. MPa	386. MPa	1.01	316	Limit RF
M/C Lug arms	C	6541	Strength	371. MPA	386. MPa	1.04	316	Limit RF
M/C Lug arms	D	6541	Strength	429. MPa	448.0	1.04	316	Ultimate RF
Control arm lugs	E	1541	Strength	1574. N.	5487. N.	>2.00	330	FF = 1.15
Control arm pins	F	1541	Strength	911. MPa	1103. MPa	1.05	330	FF =1.15 No plastic bending
Control arm root section	E	1541	Strength	244.0 N.	448.0 N.	1.83	330	
Piano hinge	E	3003	Bending strength	390.8 MPa	407.0 MPa	1.04	334	Limit RF

Table 3.8-1 Trim Tab RF Summary

3.9 LE Mass Balance Assembly

Part Numbers: Table 1-2**,** Table 1-3**,** Table 1-6 **&** Table 1-11

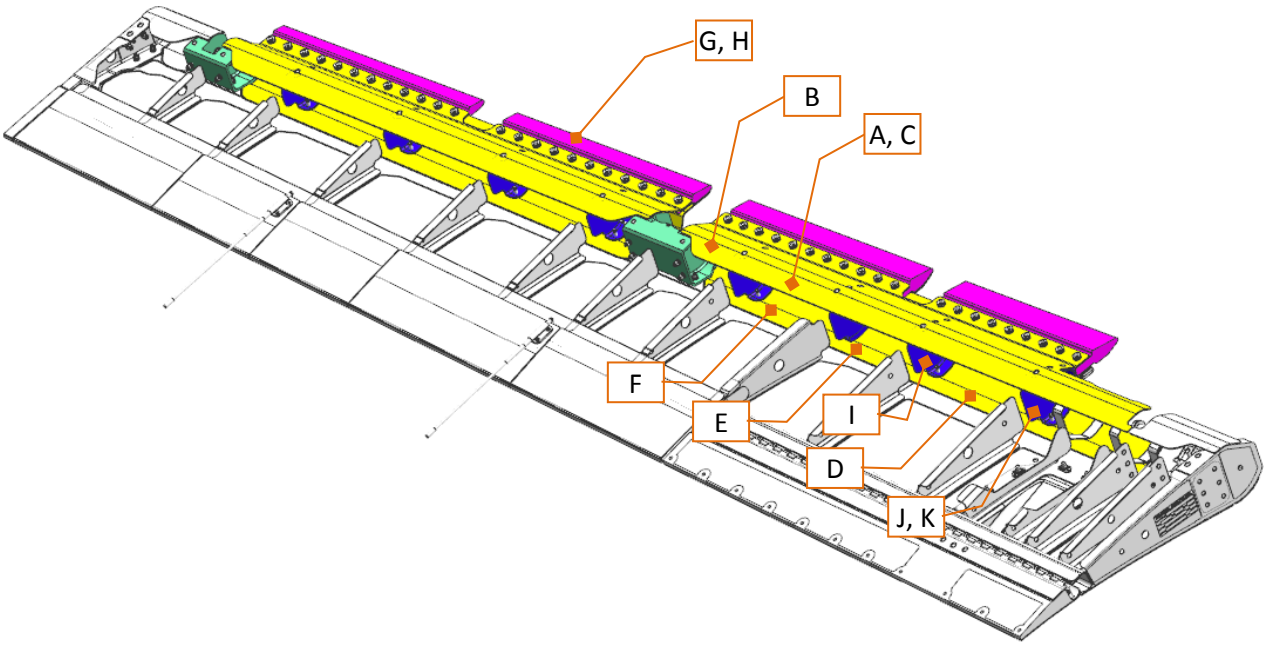

Figure 3-9 Aileron Balance Mass Assembly RF Locations

Item	Location	Load Case	Criterion	Load or Stress		RF	Page	Remarks
				Actual	Allowable			
LE Upper Skin	A	3055	Strength	134.4 MPa	283. MPa	>2.00	249	Bay 6
LE Upper Skin	B	5005	Buckling		Inter[Shear-comp]	>2.00	251	Bay 7 Relative to UL
LE USkin-Fspar, joint	C	3002	Bearing	434. N.	1035. N.	>2.00	255	Bay 6
LE Lower Skin	D	3056	Strength	135.2 MPa	283.0 MPa	>2.00	260	Bay 4
LE Lower Skin	E	3002	Buckling		Inter[Shear-comp]	>2.00	262	Bay 5
LE LSkin-Fspar, joint	F	3002	Bearing	752. N.	1260. N.	1.67	266	Bay 6
Balance mass	G	3055	Strength	<50.	600.	>2.00	280	All segments
Mass-skin joint	H	3055	Bearing	293.8 N.	6513. N.	>2.00	284	Aft masses 1.15 FF
LE Ribs	I	3055	Strength	98.6 MPa	132.9 MPa	1.34	273	LE rib 4
LE Ribs	J	3002	Buckling		Inter[Shear-comp]	>2.00	275	LE rib 3
LE Rib-F spar joint	K	5005	Bearing	843.5 N.	1700. N	1.75	277	LE rib 3

Table 3.9-1 Aileron Balance Mass Assembly RF Summary

3.10 Aileron Support Structure

Part Numbers: Table 1-9

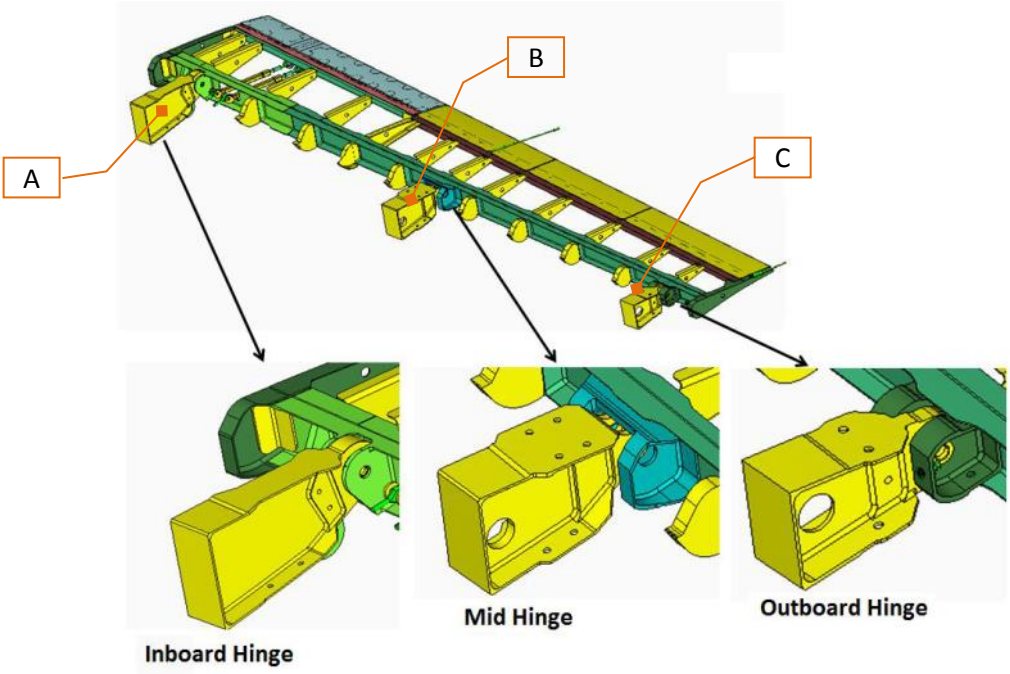

Figure 3-10 Aileron Support Structure RF Locations.

Item	Location	Load Case	Criterion	Load or Stress		RF	Page	Remarks
				Actual	Allowable			
IB support bracket	A	3054	Strength	412.8 MPa	418.0 MPa	1.01	349	
Mid support bracket	B	3002	Strength	165.1 MPa	185.0 MPa	1.12	366	Local flange buckling allowable.
OB support bracket	C	3002	Strength	52.1 MPa	117.0 MPa	>2.00	380	Local flange buckling allowable

Table 3.10-1 Aileron Support Structure RF Summary

4 TABLE OF SYMBOLS

Materials

Elastic modulus	E	[MPa]
Elastic compression modulus	E_c	[MPa]
Elastic moduli of the plates	E_1,E_2	[MPa]
Shear modulus	G	[MPa]
Poisson's ratio	nu or v	[-]
Density	rho or ρ	[tonne/mm^3]
Ultimate tensile strength	F_{tu}	[MPa]
Yield tensile strength	F_{ty}	[MPa]
Yield compressive strength	F_{cy}	[MPa]
Ultimate shear strength	F_{su}	[MPa]
Ultimate bearing allowable (e/D=2)	F_{bru}	[MPa]
Ultimate bearing allowable (e/D=1.5)	F_{bru}	[MPa]
Limit bearing allowable (e/D=2)	F_{bry}	[MPa]
Limit bearing allowable (e/D=1.5)	F_{bry}	[MPa]
Plastic bending strength	F_{bu}	[MPa]

Geometry

Thickness of Plates	t_1,t_2	[mm]
Fastener diameter	D	[mm]
Fastener head diameter	D_h	[mm]
Area of the section of the shank of the fastener	A	[mm^2]
Fastener grip length corrected with the thickness repartition factors	L_f	[mm]
End pad thickness	t_{ep}	[mm]
Vertical flange thickness	$t_{f,b}$	[mm]
Horizontal flange thickness	$t_{f,a}$	[mm]
Flange effective width	w	[mm]
Fastener eccentricity	c	[mm]
Width of Critical Section in Bending	b	[mm]
Fastener pitch	p	[mm]
Fastener edge distance	ed	[mm]
Flange thickness	t_f	[mm]
Thickness of the vertical leg	t_{b1}	[mm]
Bore diameter	D	[mm]
Lug edge distance	e	[mm]
Lug thickness	t	[mm]
Lug half width	W/2	[mm]
Lug edge angle	ϕ	[deg]
End Radius or Lug Radius	R	[mm]
End margin for bearing RF	e_{ed}	[mm]
Pin Outer Diameter	D_{PO}	[mm]
Bush Inner Diameter	$D_{i,bh}$	[mm]
Bush Outer Diameter	$D_{o,bh}$	[mm]
Equivalent Lug Radius for tapered eccentric lug	R_{eq}	[mm]

Distance between the lug mid-planes	L	[mm]
Net section area	A_{net}	[mm2]
Area moments of inertia of the section	Ixx,Iyy,Ixy	[mm4]
Gap between lugs	g	[mm]
Axial Load Ratio	R_a	[-]
Shear Load Ratio	R_s	[-]
Bushing Inner Diameter	ID	[mm]
Bushing Outer Diameter	OD	[mm]
Thickness of the Radius Washer	t_{RW}	[mm]
Length of the Radius Washer	L_{RW}	[mm]

Analysis

Parameter 3.0 for Hi-Lite / Hi-Tigue, 2.2 for a solid rivet	k	[-]
Double Shear Factor: 2.0 for Double Shear, 1.0 for Single Shear	m	[-]
Fitting Factor	FF	[-]
Ultimate Factor	UF	[-]
Applied shear load on the fastener	P_s	[N]
Joint or fastener shear strength	P_s	[N]
Minimum of fastener and collar tension strength allowable	P_t	[N]
Applied tension load on the fastener	$P_{t,appl}$	[N]
Elongation at ultimate	εu	[mm/mm]
Elongation at yield	εy	[mm/mm]
Section Factor	K	[-]
Plastic Strain at F_{tu}	ε'_u	[mm/mm]
Ramberg-Osgood Parameter	m	[-]
Datum Stress	F_0	[MPa]
Bending Stress Factor	$k_{b,a}$	[-]
Ultimate bending stress	f_b	[MPa]
Ultimate shear through stress	f_{st}	[MPa]
Ultimate shear stress	f_s	[MPa]
Ultimate axial load on the lug	$P_{ax,ult}$	[MPa]
Ultimate transverse load on the lug	$P_{tr,ult}$	[MPa]
Ultimate load normal to the lug plane	$P_{norm,ult}$	[MPa]
Shear Stress Ratio	R_s	[-]
Tension Stress Ratio	R_t	[-]
Bending Moment	M	[N-mm]
Maximum Bending + Axial	f_{max}	[MPa]
Radial Load for Spherical Bearing	P_{RADIAL}	[N]
Axial Load for Spherical Bearing	P_{AXIAL}	[N]
Resultant Applied Load on the Lug	P_{app}	[N]
Lug Load Angle	α	[degree]
Total Shear Force	V	[N]
Stress Concentration Factor	K_t	[-]
Ultimate Lug Allowable	P_{tu}	[N]
Limit Applied Strength	P_{app}	[N]

Limit Lug Allowable	P_{ty}	[N]
Limit Lug Net Section Allowable	$P_{ty,ns}$	[N]

5 TABLE OF REFERENCES

[1] ER-24-000736, PC-24 Design and Sizing Criteria, issue 02

[2] ER-24-000251, PC-24 Structural Stress Analysis (SSA) Methods, issue 01

[3] ER-24-000190, PC-24 Metallic Material Data, issue 04.

[4] ER-24-000194, PC-24 Fastener Joint Allowables, issue 01.

[5] ER-24-000530, Structural Classification – Summary Report, issue 01

[6] VV0405-02C, Mechanical Milling of Parts Made of Metallic Materials Aluminium, Steel and Titanium.

[7] Pilatus Structural Manual (PSM)

[8] PESS version 2.0.1 SP1

[9] ER-24-000271, PESS SW User Manual, issue 01

[10] Release Guide PESS_v2.0.1

[11] ER-24-000368, Definition of Aileron & Trim's Load Cases, issue 01.

[12] ER-24-000184 iss3, PC-24 Aerodynamic Reference Data

[13] ER-24-000545, Wing-Interface Loads-Ailerons, issue 02

[14] ER-24-000547_01_Wing-Interface_Loads-Aileron_Control_System, issue 01

[15] ER-24-000627, Wing Aileron Control System – Wing, issue 01.

[16] ER-24-000416, PC-24 GFEM_R5.0.0 Description, Verification & Validation, issue 01

[17] ER-24-000535, DFEMs Register Description and Validation Wing, issue 01

[18] HSB 34201-01, Interpretation of local stress concentrations from linear Finite Element analysis using the Neuber method, Gräber, 24.11.2014, issue A

[19] ER-24-000266, iss 01, Composite Material Data

[20] ER-24-000328, Composite Fastener Joint Allowables, issue 01

[21] ER-24-000239, Environmental Handbook for the PC-24 Aircraft, issue 03,

[22] ER-24-000656, Wing Miscellaneous Installations, issue 01

[23] ER-24-000191, Mass Distribution for Certification Aircraft Loads, issue 05

[24] Pilatus purchased parts data base: 9154910500, Wolfram_Spec.pdf.

[25] ER-24-000338, Wing - Aileron Control Surface – Limit, issue 03

6 APPENDICES

6.1 Appendix A Material Data

All material data used in this report is taken from
ref. [3] ER-24-000190, PC-24 Metallic Material Data, Issue 04.

1 ALUMINIUM						
Alloy		AA2024				
Specification		AMS-QQ-A-200/3	AMS-QQ-A-225/6	PPS 916-38-01, PPS 916-38-02, WL 3.1354-3	AMS 4035, AMS-QQ-A-250/4	
Temper		T8511	T351	T3511	T42	
Form		Extruded Bar, Rod and Shapes	Bar, rolled, drawn, or cold-finished	Extruded Shapes	Flat Sheet and Plate	
Thickness	mm	1.27-6.32	12.70-25.40	1.20-2.00	0.25-0.52	0.53-6.32
Basis		S	S	S	S	S
Reference (see Table 3-32)					2	2
Reference Information						
Name (PESS Database)		AA2024 ¦ BRS(E) ¦ T8511 ¦ ¦ S	AA2024 ¦ B(R) ¦ T351 ¦ 12.70-25.4¦ S	AA2024 ¦ EXT ¦ T3511 ¦ 1.20-2.00 ¦ S	AA2024 ¦ FSP ¦ T42 ¦ 0.25-0.52 ¦ S	AA2024 ¦ FSP ¦ T42 ¦ 0.53-6.32 ¦ S
PPDS				916.86.38.116/ 123/222/303	916.16.35.103, 916.16.35.104	916.16.35.106/ 108/11x/12x 916.16.32.xxx
Temperature	°C	20	20	20	20	20
Density	kg/m³	2768	2768	2768	2768	2768
F_{tu}-L	MPa	441	427	440	427	427
F_{tu}-LT	MPa	441	421		427	427
F_{tu}-ST	MPa					
F_{ty}-L	MPa	386	310	330	262	262
F_{ty}-LT	MPa	379	248		262	262
F_{ty}-ST	MPa					
F_{cy}-L	MPa	393	234		290	290
F_{cy}-LT	MPa	393	283		283	283
F_{cy}-ST	MPa					
F_{su}-L	MPa	241	255		255	255
F_{su}-LT	MPa					
F_{su}-ST	MPa					
F_{bru}-L (e/D=1.5)	MPa	648	621		683	683
F_{bru}-LT (e/D=1.5)	MPa					
F_{bru}-L (e/D=2.0)	MPa	848	793		848	848
F_{bru}-LT (e/D=2.0)	MPa					
F_{bry}-L (e/D=1.5)	MPa	545	434		462	462
F_{bry}-LT (e/D=1.5)	MPa					
F_{bry}-L (e/D=2.0)	MPa	641	510		552	552
F_{bry}-LT (e/D=2.0)	MPa					
e-L	%	4	10	12		
e-LT	%				12.0	15.0
e-ST	%					
E	MPa	74500	72400		72400	72400
E_c	MPa	75800	73800		73800	73800
E_Primary	MPa					
E_Secondary	MPa					
E_c_Primary	MPa					
E_c_Secondary	MPa					
G	MPa	28300	27600		27200	27200
nu		0.33	0.33		0.33	0.33
C	J/(kg.K)				896	896
K	W/(m.K)				123	123
alpha	(mm/mm)/K	2.24E-05	2.24E-05	2.24E-05	2.24E-05	2.24E-05

Table 3-2: PC-24 Metallic Material Properties – Aluminium, Part 2 of 18

Table 6-1 Material properties for Aluminium

1 ALUMINIUM							
Alloy		AA2024					
Specification		AMS 4037, AMS-QQ-A-250/4					
Temper		T3					
Form		Sheet					
Thickness	mm	0.25-0.51		0.52-3.27		3.28-6.32	
Basis		A	B	A	B	A	B
Reference (see Table 3-32)		4	4	4	4	4	4
Reference Information							
Name (PESS Database)		AA2024 ¦ S ¦ T3 ¦ 0.25-0.51 ¦ A	AA2024 ¦ S ¦ T3 ¦ 0.25-0.51 ¦ B	AA2024 ¦ S ¦ T3 ¦ 0.52-3.27 ¦ A	AA2024 ¦ S ¦ T3 ¦ 0.52-3.27 ¦ B	AA2024 ¦ S ¦ T3 ¦ 3.28-6.32 ¦ A	AA2024 ¦ S ¦ T3 ¦ 3.28-6.32 ¦ B
PPDS		916.16.35.103/104		916.16.35.106/108/11x		916.16.35.12x	
Temperature	°C	20	20	20	20	20	20
Density	kg/m³	2768	2768	2768	2768	2768	2768
F_{tu}-L	MPa	441	448	441	448	441	455
F_{tu}-LT	MPa	434	441	434	441	434	448
F_{tu}-ST	MPa						
F_{ty}-L	MPa	324	331	324	331	324	331
F_{ty}-LT	MPa	290	296	290	296	290	296
F_{ty}-ST	MPa						
F_{cy}-L	MPa	269	276	269	276	269	276
F_{cy}-LT	MPa	310	317	310	317	310	317
F_{cy}-ST	MPa						
F_{su}-L	MPa	269	276	269	276	276	283
F_{su}-LT	MPa						
F_{su}-ST	MPa						
F_{bru}-L (e/D=1.5)	MPa	717	731	717	731	731	738
F_{bru}-LT (e/D=1.5)	MPa						
F_{bru}-L (e/D=2.0)	MPa	889	903	889	903	903	917
F_{bru}-LT (e/D=2.0)	MPa						
F_{bry}-L (e/D=1.5)	MPa	503	517	503	517	503	517
F_{bry}-LT (e/D=1.5)	MPa						
F_{bry}-L (e/D=2.0)	MPa	607	621	607	621	607	621
F_{bry}-LT (e/D=2.0)	MPa						
e-L	%						
e-LT	%						
e-ST	%						
E	MPa	72400	72400	72400	72400	72400	72400
E_c	MPa	73800	73800	73800	73800	73800	73800
E_Primary	MPa						
E_Secondary	MPa						
E_c_Primary	MPa						
E_c_Secondary	MPa						
G	MPa	27200	27200	27200	27200	27200	27200
nu		0.33	0.33	0.33	0.33	0.33	0.33
C	J/(kg.K)	896	896	896	896	896	896
K	W/(m.K)	123	123	123	123	123	123
alpha	(mm/mm)/K	2.24E-05	2.24E-05	2.24E-05	2.24E-05	2.24E-05	2.24E-05

Table 3-3: PC-24 Metallic Material Properties – Aluminium, Part 3 of 18

Table 6-2 Material properties for Aluminium

1 ALUMINIUM							
Alloy		AA2124					
Specification		AMS 4101, AMS-QQ-A-250/29					
Temper		T851					
Form		Plate					
Thickness	mm	25.40-38.10		38.11-50.80		50.81-76.20	
Basis		A	B	A	B	A	B
Reference (see Table 3-32)		10	10	10	10	10	10
Reference Information							
Name (PESS Database)		AA2124 ¦ P ¦ T851 ¦ 25.40-38.10 ¦ A	AA2124 ¦ P ¦ T851 ¦ 25.40-38.10 ¦ B	AA2124 ¦ P ¦ T851 ¦ 38.11-50.80 ¦ A	AA2124 ¦ P ¦ T851 ¦ 38.11-50.80 ¦ B	AA2124 ¦ P ¦ T851 ¦ 50.81-76.20 ¦ A	AA2124 ¦ P ¦ T851 ¦ 50.81-76.20 ¦ B
PPDS		916.16.36.233/234/238		916.16.36.240		916.16.36.245/250	
Temperature	°C	20	20	20	20	20	20
Density	kg/m³	2768	2768	2768	2768	2768	2768
F_{tu}-L	MPa	455	476	455	469	448	469
F_{tu}-LT	MPa	455	469	455	469	448	469
F_{tu}-ST	MPa	441	455	441	455	434	441
F_{ty}-L	MPa	393	434	393	421	393	421
F_{ty}-LT	MPa	393	427	393	421	393	421
F_{ty}-ST	MPa	379	414	379	407	379	407
F_{cy}-L	MPa	393	427	393	421	386	414
F_{cy}-LT	MPa	393	427	393	421	393	421
F_{cy}-ST	MPa	407	441	393	421	400	427
F_{su}-L	MPa	255	269	262	269	262	269
F_{su}-LT	MPa	262	269	262	269	262	269
F_{su}-ST	MPa	241	248	248	255	248	255
F_{bru}-L (e/D=1.5)	MPa	676	696	669	689	662	689
F_{bru}-LT (e/D=1.5)	MPa	676	696	669	689	662	689
F_{bru}-L (e/D=2.0)	MPa	869	896	869	896	862	896
F_{bru}-LT (e/D=2.0)	MPa	869	896	869	896	862	896
F_{bry}-L (e/D=1.5)	MPa	558	607	545	579	552	586
F_{bry}-LT (e/D=1.5)	MPa	558	607	545	579	552	586
F_{bry}-L (e/D=2.0)	MPa	648	703	627	676	634	683
F_{bry}-LT (e/D=2.0)	MPa	648	703	627	676	634	683
e-L	%						
e-LT	%						
e-ST	%						
E	MPa	71700	71700	71700	71700	71700	71700
E_c	MPa	75200	75200	75200	75200	75200	75200
E_Primary	MPa						
E_Secondary	MPa						
E_c_Primary	MPa						
E_c_Secondary	MPa						
G	MPa	27000	27000	27000	27000	27000	27000
nu		0.33	0.33	0.33	0.33	0.33	0.33
C	J/(kg.K)	879	879	879	879	879	879
K	W/(m.K)	151	151	151	151	151	151
alpha	(mm/mm)/K	2.27E-05	2.27E-05	2.27E-05	2.27E-05	2.27E-05	2.27E-05

Table 3-7: PC-24 Metallic Material Properties – Aluminium, Part 7 of 18

Table 6-3 Material properties for Aluminium

1 ALUMINIUM							
Alloy		AA2124					
Specification		AMS 4101, AMS-QQ-A-250/29					
Temper		T851					
Form		Plate					
Thickness	mm	76.21-101.60		101.61-127.00		127.01-152.40	
Basis		A	B	A	B	A	B
Reference (see Table 3-32)		10	10	10	10	10	10
Reference Information							
Name (PESS Database)		AA2124 ¦ P ¦ T851 ¦ 76.21-101.60 ¦ A	AA2124 ¦ P ¦ T851 ¦ 76.21-101.60 ¦ B	AA2124 ¦ P ¦ T851 ¦ 101.61-127.00 ¦ A	AA2124 ¦ P ¦ T851 ¦ 101.61-127.00 ¦ B	AA2124 ¦ P ¦ T851 ¦ 127.01-152.40 ¦ A	AA2124 ¦ P ¦ T851 ¦ 127.01-152.40 ¦ B
PPDS		916.16.36.255/258		916.16.36.260/262		916.16.36.264/266	
Temperature	°C	20	20	20	20	20	20
Density	kg/m³	2768	2768	2768	2768	2768	2768
F_{tu}-L	MPa	448	462	441	455	434	448
F_{tu}-LT	MPa	448	462	441	455	434	448
F_{tu}-ST	MPa	427	434	421	427	400	407
F_{ty}-L	MPa	386	414	379	400	372	386
F_{ty}-LT	MPa	386	414	379	400	372	386
F_{ty}-ST	MPa	372	393	365	379	352	365
F_{cy}-L	MPa	379	407	365	386	359	372
F_{cy}-LT	MPa	386	414	379	400	372	386
F_{cy}-ST	MPa	393	421	393	414	386	400
F_{su}-L	MPa	262	269	255	262	255	262
F_{su}-LT	MPa	262	269	255	262	255	262
F_{su}-ST	MPa	248	255	241	248	241	248
F_{bru}-L (e/D=1.5)	MPa	662	683	648	669	641	662
F_{bru}-LT (e/D=1.5)	MPa	662	683	648	669	641	662
F_{bru}-L (e/D=2.0)	MPa	862	883	848	869	834	862
F_{bru}-LT (e/D=2.0)	MPa	862	883	848	869	834	862
F_{bry}-L (e/D=1.5)	MPa	552	586	545	579	531	545
F_{bry}-LT (e/D=1.5)	MPa	552	586	545	579	531	545
F_{bry}-L (e/D=2.0)	MPa	634	683	634	669	627	655
F_{bry}-LT (e/D=2.0)	MPa	634	683	634	669	627	655
e-L	%						
e-LT	%						
e-ST	%						
E	MPa	71700	71700	71700	71700	71700	71700
E_c	MPa	75200	75200	75200	75200	75200	75200
E_Primary	MPa						
E_Secondary	MPa						
E_c_Primary	MPa						
E_c_Secondary	MPa						
G	MPa	27000	27000	27000	27000	27000	27000
nu		0.33	0.33	0.33	0.33	0.33	0.33
C	J/(kg.K)	879	879	879	879	879	879
K	W/(m.K)	151	151	151	151	151	151
alpha	(mm/mm)/K	2.27E-05	2.27E-05	2.27E-05	2.27E-05	2.27E-05	2.27E-05

Table 3-8: PC-24 Metallic Material Properties – Aluminium, Part 8 of 18

Table 6-4 Material properties for Aluminium

1 ALUMINIUM							
Alloy		AA7075 Clad					
Specification		PPS 916-90-01, WL 3.4374, AMS 4049					
Temper		T62					
Form		Sheet / Formed Part					
Thickness	mm	0.30-1.00		1.01-1.59		1.60-4.75	
Basis		A	B	A	B	A	B
Reference (see Table 3-32)		33		33		33	
Reference Information		These properties are for PC-24 P03 onwards					
Name (PESS Database)		AA7075 Clad ¦ S ¦ T62 ¦ 0.30-1.00 ¦ A	AA7075 Clad ¦ S ¦ T62 ¦ 0.30-1.00 ¦ B	AA7075 Clad ¦ S ¦ T62 ¦ 1.01-1.59 ¦ A	AA7075 Clad ¦ S ¦ T62 ¦ 1.01-1.59 ¦ B	AA7075 Clad ¦ S ¦ T62 ¦ 1.60-4.75 ¦ A	AA7075 Clad ¦ S ¦ T62 ¦ 1.60-4.75 ¦ B
PPDS		916.86.90.941		916.86.90.942/944		916.86.90.943	
Temperature	°C	20	20	20	20	20	20
Density	kg/m³	2796	2796	2796	2796	2796	2796
F_{tu}-L	MPa	483	510	490	517	503	531
F_{tu}-LT	MPa	483	510	490	517	503	531
F_{tu}-ST	MPa						
F_{ty}-L	MPa	427	448	434	455	448	476
F_{ty}-LT	MPa	414	434	421	441	434	462
F_{ty}-ST	MPa						
F_{cy}-L	MPa	421	441	427	448	441	469
F_{cy}-LT	MPa	441	462	448	469	462	490
F_{cy}-ST	MPa						
F_{su}-L	MPa	290	303	290	310	303	317
F_{su}-LT	MPa						
F_{su}-ST	MPa						
F_{bru}-L (e/D=1.5)	MPa	745	793	758	800	779	820
F_{bru}-LT (e/D=1.5)	MPa						
F_{bru}-L (e/D=2.0)	MPa	965	1020	979	1034	1007	1062
F_{bru}-LT (e/D=2.0)	MPa						
F_{bry}-L (e/D=1.5)	MPa	621	648	627	662	648	689
F_{bry}-LT (e/D=1.5)	MPa						
F_{bry}-L (e/D=2.0)	MPa	724	758	731	772	758	807
F_{bry}-LT (e/D=2.0)	MPa						
e-L	%						
e-LT	%	7		8		8	
e-ST	%						
E	MPa						
E_c	MPa						
E_Primary	MPa	71000	71000	71000	71000	71000	71000
E_Secondary	MPa	65500	65500	65500	65500	67600	67600
E_c_Primary	MPa	72400	72400	72400	72400	72400	72400
E_c_Secondary	MPa	66900	66900	66900	66900	68900	68900
G	MPa						
nu		0.33	0.33	0.33	0.33	0.33	0.33
C	J/(kg.K)						
K	W/(m.K)						
alpha	(mm/mm)/K						

Table 3-16: PC-24 Metallic Material Properties – Aluminium, Part 16 of 18

Table 6-5 Material properties for Aluminium

2 STEEL										
Alloy		15-5PH								
Specification		AMS 5659			AMS 5862					
Temper		H1025		H1150	H1025				H1150	
Form		Bar			Plate				Plate	
Thickness	mm	≤ 254.00		≤ 304.80	4.75-15.88	15.89-50.80	50.81-76.20	76.21-101.60	4.76-15.88	15.89-101.60
Basis		A	B	S	S	S	S	S	S	S
Reference (see Table 3-32)		22	22	22	23	23	23	23	52	52
Reference Information										
Name (PESS Database)		15-5PH ¦ B ¦ H1025 ¦ ≤254.00 ¦ A	15-5PH ¦ B ¦ H1025 ¦ ≤254.00 ¦ B	15-5PH ¦ B ¦ H1150 ¦ ≤304.80 ¦ S	15-5PH ¦ P ¦ H1025 ¦ 4.75-15.88 ¦ S	15-5PH ¦ P ¦ H1025 ¦ 15.89-50.80 ¦ S	15-5PH ¦ P ¦ H1025 ¦ 50.81-76.20 ¦ S	15-5PH ¦ P ¦ H1025 ¦ 76.21-101.60 ¦ S	15-5PH ¦ P ¦ H1150 ¦ 4.76-15.88 ¦ S	15-5PH ¦ P ¦ H1150 ¦ 15.89-101.60 ¦ S
PPDS		913.54.50.2xx		913.54.50.2xx	913.15.05.201	913.15.05.203	913.15.05.212	913.15.05.216	913.15.05.201	913.15.05.203
Temperature	°C	20	20	20	20	20	20	20	20	20
Density	kg/m³	7833	7833	7833	7833	7833	7833	7833	7833	7833
F_{tu}-L	MPa	1069	1089	931	1062	1062	1062		931	931
F_{tu}-LT	MPa	1069	1089	931	1069	1069	1069	1069		
F_{tu}-ST	MPa									
F_{ty}-L	MPa	1000	1048	724	986	986	986		724	724
F_{ty}-LT	MPa	1000	1048	724	1000	1000	1000	1000		
F_{ty}-ST	MPa									
F_{cy}-L	MPa	986	1034	683	1034	1034	1034			
F_{cy}-LT	MPa	986	1034	683	1048	1027	1007			
F_{cy}-ST	MPa									
F_{su}-L	MPa	669	683	586	669	669	662			
F_{su}-LT	MPa									
F_{su}-ST	MPa									
F_{bru}-L (e/D=1.5)	MPa	1813	1848	1586	1772	1772	1772			
F_{bru}-LT (e/D=1.5)	MPa									
F_{bru}-L (e/D=2.0)	MPa	2289	2337	2020	2282	2282	2282			
F_{bru}-LT (e/D=2.0)	MPa									
F_{bry}-L (e/D=1.5)	MPa	1455	1531	1145	1455	1455	1455			
F_{bry}-LT (e/D=1.5)	MPa									
F_{bry}-L (e/D=2.0)	MPa	1724	1813	1386	1696	1696	1696			
F_{bry}-LT (e/D=2.0)	MPa									
e-L	%			16.0					10.0	16.0
e-LT	%			11.0	8.0	12.0	12.0	12.0		
e-ST	%									
E	MPa	196500	196500	196500	196500	196500	196500	196500		
E_c	MPa	201300	201300	201300	201300	201300	201300	201300		
E_Primary	MPa									
E_Secondary	MPa									
E_c_Primary	MPa									
E_c_Secondary	MPa									
G	MPa	77400	77400	77400	77400	77400	77400	77400		
nu		0.27	0.27	0.27	0.27	0.27	0.27	0.27		
C	J/(kg.K)									
K	W/(m.K)									
alpha	(mm/mm)/K			1.13E-05						

Table 3-19: PC-24 Metallic Material Properties – Steel, Part 1 of 7

Table 6-6 Material properties for Steel

2 STEEL						
Alloy		17-7PH	A-286			AISI303
Specification		AMS 5678	AMS 5732, AMS 5731		AMS 5737, AMS 5853	AMS 5640
Temper		Spring-temp	H1325		Solution Treated and Aged	Condition A
Form		Coils or Reels	Bar, Round		NAS4003 Spec Fastener	Wire, Round
Thickness	mm	≤ 6.40	≤ 63.47	63.48-127.00	≤ 38.10	2.00-5.00
Basis		-	S	S	S	-
Reference (see Table 3-32)		55	39	39	48	56
Reference Information					Property data is for NAS4003 spec. Other properties see Ref. 39 for information only	Refer to PPDS sheet for properties
Name (PESS Database)		17-7PH ¦ Coils ¦ - ¦ ≤6.40 ¦ -	A-286 ¦ B ¦ H1325 ¦ ≤63.47 ¦ S	A-286 ¦ B ¦ H1325 ¦ 63.48-127.00 ¦ S	A-286 ¦ B ¦ - ¦ ≤38.10 ¦ -	AISI303 ¦ Wire ¦ CondA ¦ 2.00-5.00 ¦ -
PPDS		913.54.55.0xx	913.54.53.112/115/116/119/121	913.54.53.124/126/128	913.54.53.200/300	913.03.03.xxx
Temperature	°C	20	20	20	20	20
Density	kg/m³	7900	7944	7944		7900
F_{tu}-L	MPa		896	896	1103	
F_{tu}-LT	MPa		896	896		
F_{tu}-ST	MPa			896		
F_{ty}-L	MPa		586	586		
F_{ty}-LT	MPa		586	586		
F_{ty}-ST	MPa			586		
F_{cy}-L	MPa					
F_{cy}-LT	MPa					
F_{cy}-ST	MPa					
F_{su}-L	MPa				655	
F_{su}-LT	MPa					
F_{su}-ST	MPa					
F_{bru}-L (e/D=1.5)	MPa					
F_{bru}-LT (e/D=1.5)	MPa					
F_{bru}-L (e/D=2.0)	MPa					
F_{bru}-LT (e/D=2.0)	MPa					
F_{bry}-L (e/D=1.5)	MPa					
F_{bry}-LT (e/D=1.5)	MPa					
F_{bry}-L (e/D=2.0)	MPa					
F_{bry}-LT (e/D=2.0)	MPa					
e-L	%			15.0		
e-LT	%			15.0		
e-ST	%			15.0		
E	MPa	195000	200600	200600		200000
E_c	MPa		200600	200600		
E_Primary	MPa					
E_Secondary	MPa					
E_c_Primary	MPa					
E_c_Secondary	MPa					
G	MPa	73000	76600	76600		
nu			0.31	0.31		
C	J/(kg.K)		461	461		
K	W/(m.K)		12.3	12.3		
alpha	(mm/mm)/K		1.62E-05	1.62E-05		

Table 3-20: PC-24 Metallic Material Properties – Steel, Part 2 of 7

Table 6-7 Material properties for Steel

2 STEEL						
Alloy		AISI304	AISI321			AISI420
Specification			AMS 5645		AMS 5510	AMS 5621
Temper			Solution Heat Treated	Solution Heat Treated	Condition A, Solution Heat Treated	HT95
Form		Shim	Wire	Bar	Sheet / Plate	Bar
Thickness	mm	≤ 1.00	< 12.7	≥ 12.7	0.40-38.10	2.30
Basis			S	S	S	S
Reference (see Table 3-32)			53	53	25	57
Reference Information		Refer to PPDS sheet for properties				
Name (PESS Database)		AISI304 ¦ Shim ¦ CondA ¦ ≤1.00 ¦ -	AISI321 ¦ Wire ¦ SHT ¦ <12.7 ¦ S	AISI321 ¦ B ¦ SHT ¦ ≥ 12.7 ¦ S	AISI321 ¦ SP ¦ CondA,SHT ¦ 0.40-38.10 ¦ S	AISI420 ¦ B ¦ HT95 ¦ 2.30 ¦ S
PPDS		913.14.30.7xx	913.03.21.101	913.03.21.1xx	913.14.54.0xx 913.14.54.1xx	913.54.07.108
Temperature	°C	20	20	20	20	20
Density	kg/m³	7916	7850	7850	7916	
F_{tu}-L	MPa		586	517	469	655
F_{tu}-LT	MPa				483	
F_{tu}-ST	MPa					
F_{ty}-L	MPa			207	152	448
F_{ty}-LT	MPa				172	
F_{ty}-ST	MPa					
F_{cy}-L	MPa				131	
F_{cy}-LT	MPa				165	
F_{cy}-ST	MPa					
F_{su}-L	MPa				324	
F_{su}-LT	MPa					
F_{su}-ST	MPa					
F_{bru}-L (e/D=1.5)	MPa					
F_{bru}-LT (e/D=1.5)	MPa					
F_{bru}-L (e/D=2.0)	MPa				1041	
F_{bru}-LT (e/D=2.0)	MPa					
F_{bry}-L (e/D=1.5)	MPa					
F_{bry}-LT (e/D=1.5)	MPa					
F_{bry}-L (e/D=2.0)	MPa				317	
F_{bry}-LT (e/D=2.0)	MPa					
e-L	%			30		
e-LT	%				40.0	
e-ST	%					
E	MPa				199900	
E_c	MPa				193100	
E_Primary	MPa					
E_Secondary	MPa					
E_c_Primary	MPa					
E_c_Secondary	MPa					
G	MPa					
nu						
C	J/(kg.K)					
K	W/(m.K)					
alpha	(mm/mm)/K					

Table 3-21: PC-24 Metallic Material Properties – Steel, Part 3 of 7

Table 6-8 Material properties for Steel

DENSRAM® Produkte sind lieferbar in Verbindung mit NiCu oder NiFe, abhängig vom Bedarf an nicht magnetischem Material oder besonderen mechanischen Eigenschaften. CASRAM bietet für jeden Anwendungsbereich die geeignete Lösung. Sollten Sie eigene spezifische Zusammensetzungen oder Materialeigenschaften benötigen, steht Ihnen unsere eigene R&D Abteilung jederzeit gerne zur Verfügung, um gemeinsam auf Ihre Bedürfnisse zugeschnittene Lösungen zu definieren.

Material	Magnetische Eigenschaften	Chemische Zusammensetzung	UTS MPa	AMS-T-21014 ASTM B 777-07	Dichte (g/cm3)
DENSRAM® F1	leicht magnetisch	W 90%, Differenz NiFe	≥ 800	Klasse 1	17
DENSRAM® F2	leicht magnetisch	W93%, Differenz NiFe	≥ 850	Klasse 2	17,6
DENSRAM® F3	leicht magnetisch	W95%, Differenz NiFe	≥ 850	Klasse 3	18
DENSRAM® F4	leicht magnetisch	W97%, Differenz NiFe	≥ 800	Klasse 4	18,5
DENSRAM® C1	nicht magnetisch	W 90%, Differenz NiCu	≥ 600	Klasse 1	17
DENSRAM® C2	nicht magnetisch	W93%, Differenz NiCu	≥ 600	Klasse 2	17,6
DENSRAM® C3	nicht magnetisch	W95%, Differenz NiCu	≥ 600	Klasse 3	18

Table 6-9 Material properties for tungsten

Pilatus part Id. 9154910500 TUNGSTEN,W93NICU
Manufactures name DENSRAM C2

Reference [24], Pilatus purchased parts data base: 9154910500, Wolfram_Spec.pdf.

6.2 Appendix B Aileron Instalation DFEM - Change log

The aileron installation DFEM is with the exception of a few minor changes identical to the mesh used in GFEM5.0.0. ref.
DFEM change log follows:

```
$$$$$$$$$$
$
$ GFEM5 to DFEM Modifications
$
The following GRIDs have been slaved to a different coordinate system
This is facilitate rotating the aileron/tab mesh into other angles
C2710002 ref. coordinate was 0 is now C2710001
C8041001 ref. coordinate was 0 is now C2710001
C2710006 ref. coordinate was 0 is now C2710001
C2710007 ref. coordinate was 0 is now C2710001
$
G2714973  def. coordinate was C2710001 is now C2710002
G2714974  def. coordinate was C2710001 is now C2710002
G2714975  def. coordinate was C2710001 is now C2710002
G2714976  def. coordinate was C2710001 is now C2710002
G2714983  def. coordinate was C2710001 is now C2710002
G2714984  def. coordinate was C2710001 is now C2710002
$
G271312  def. coordinate was C2710003 is now C0
G271313  def. coordinate was C2710004 is now C0
$
The trim tab and aileron hinge lines are NOT parallel.
As the trim tab rotates it is not possible to have a CORD with a
y axis parallel to the aileron hinge AND the Z axis along the control rod axis.
(control rods are not EXACTLY 90deg to aileron hinge axis)
To avoid confusion/errors the following CORDs have been deleted
C2710003 has been deleted
C2710004 has been deleted
$
Trim tab C2710002 y axis has been realigned
Now parallel to trim hinge centre line.
$
Non structural mass has been added to the following properties
P2700109    NSM = 2.95e-7 Mg/mm3
P2700114    NSM = 4.65e-7 Mg/mm3
$
Leading Edge QUAD Mesh material directions reset (to be consistent with the box mesh)
$
$$$$$$$$$$$$$$$$$$
```

```
$$$
```

6.3 Appendix C Aerodynamic Pressure Contour Plots

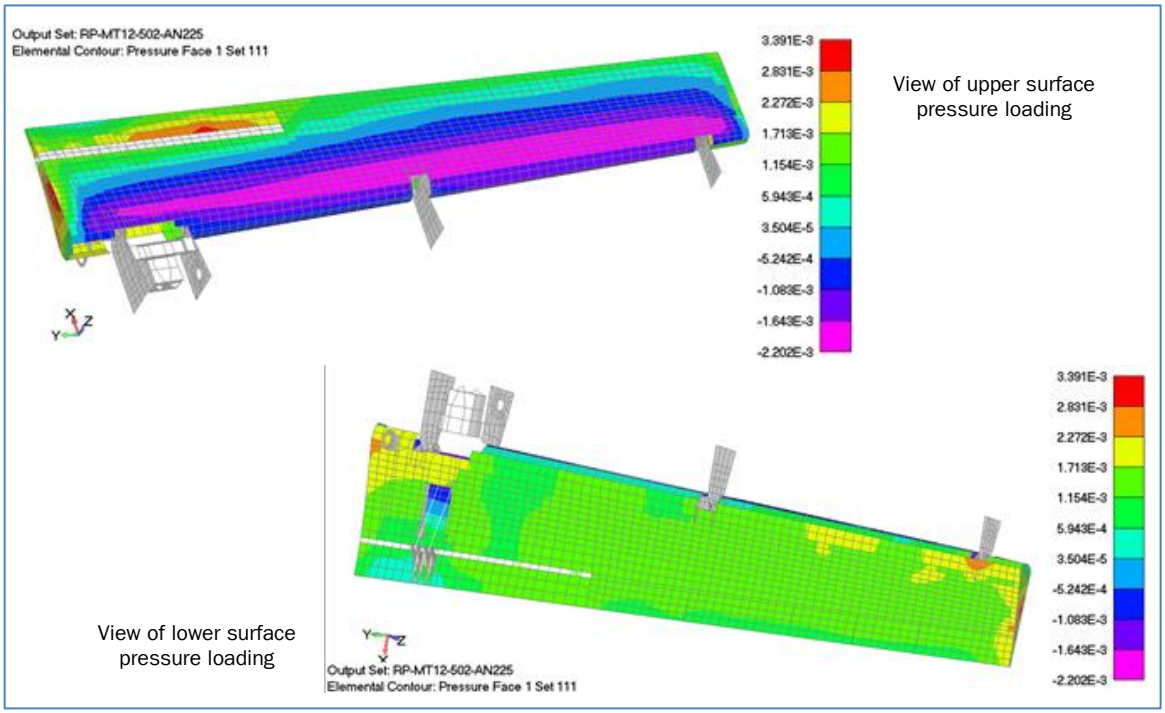

Figure 6-1: Aerodynamic (limit) pressure contour plots for LC: RP-MT12-502-AN225.

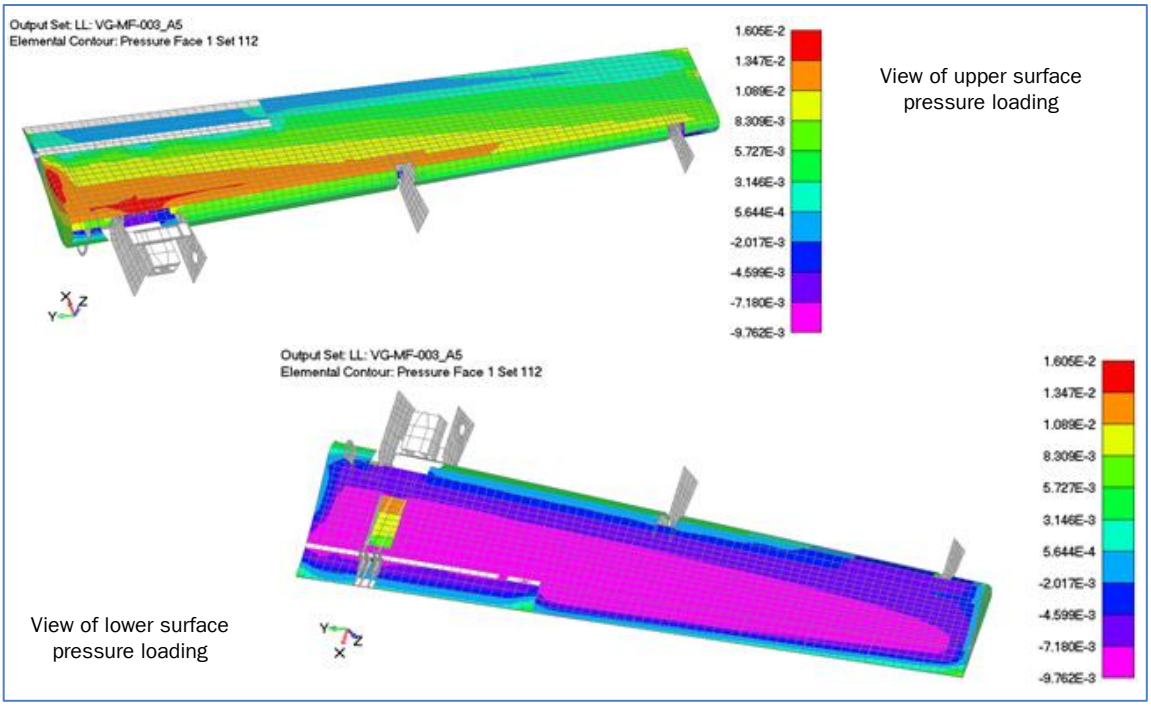

Figure 6-2: Aerodynamic (limit) pressure contour plots for LC: VG-MF-003_A5.

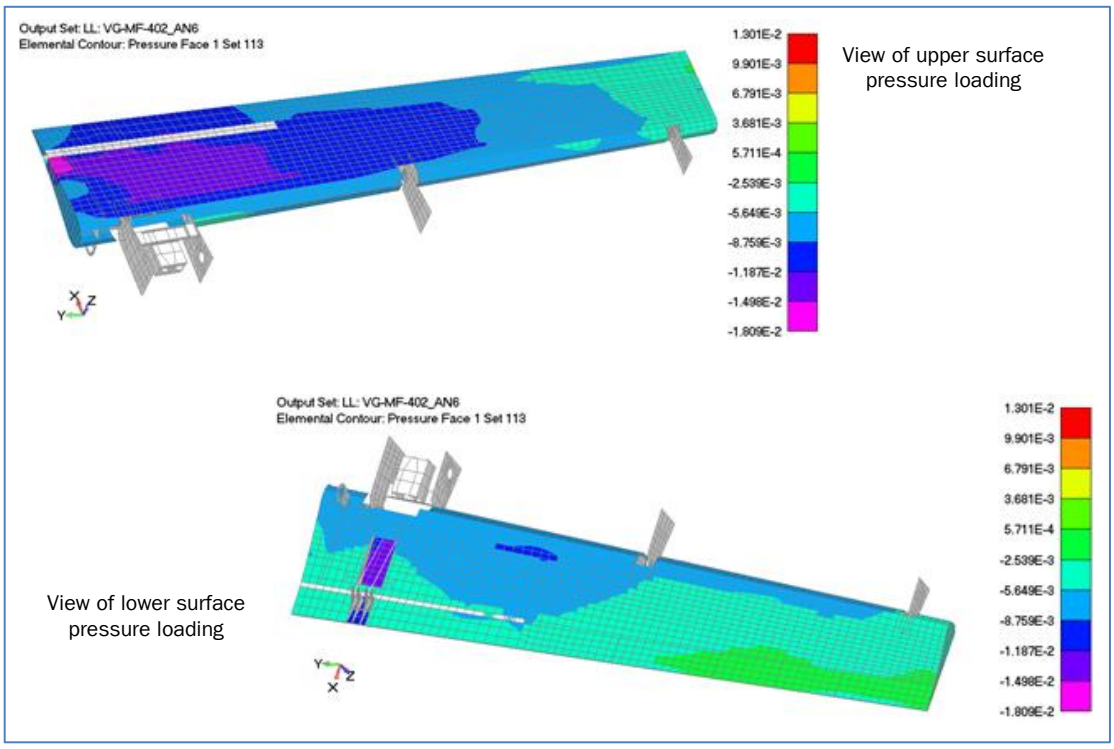

Figure 6-3: Aerodynamic (limit) pressure contour plots for LC: VG-MF-402_AN6.

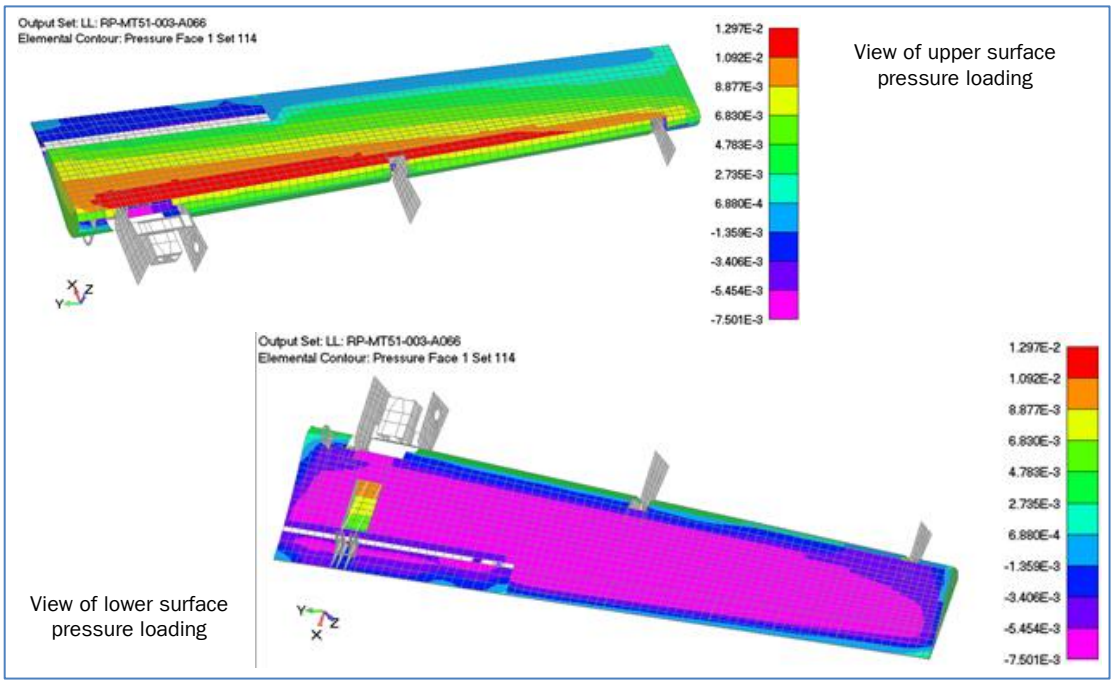

Figure 6-4: Aerodynamic (limit) pressure contour plots for LC: RP-MT51-003-A066.

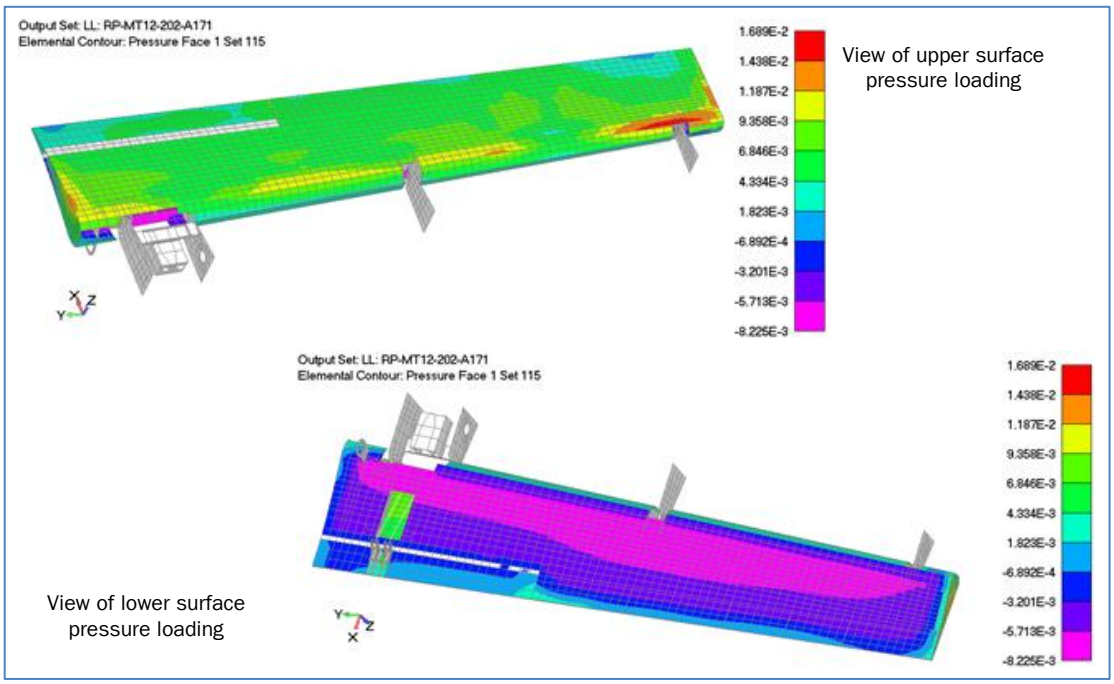

Figure 6-5: Aerodynamic (limit) pressure contour plots for LC: RP-MT12-202-A171.

6.4 Appendix D Aileron Hinge Moment

Aileron hinge moment determined from widtunnel test data.
Ref. [15] ER-24-000627, Wing Aileron Control System – Wing, Issue 01

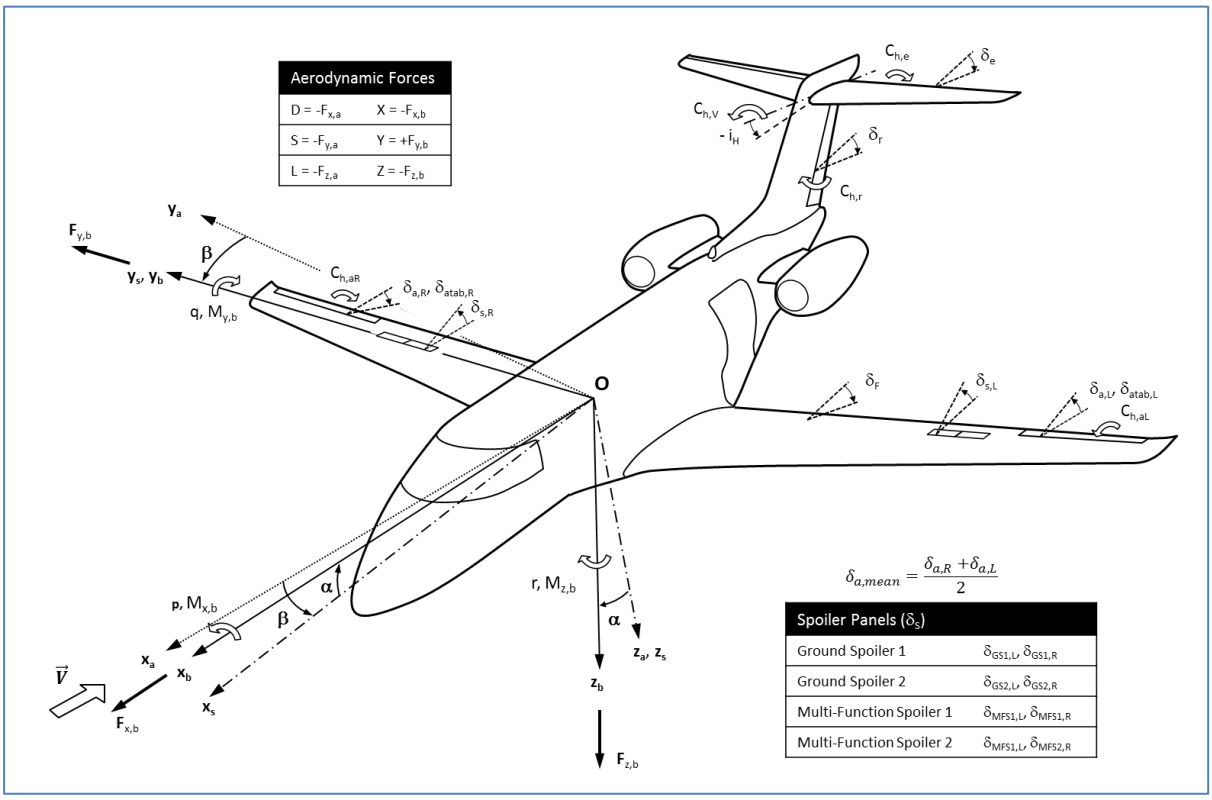

Figure 6-6 Hinge moment calculation, nomenclature and sign convention (ref [12], fig 5.2)

From ref ([15] Eq. 89)

$$\begin{cases} C_{h,a,R} = C_{h0,a} + C_{h\alpha}\alpha + C_{h\delta_a}\delta_a + C_{h\delta_{a,tab}}k_{\delta_{a,tab}}\delta_a, & \text{for } \delta_a = \delta_{a,R} \\ C_{h,a,L} = -\left[C_{h0,a} + C_{h\alpha}\alpha + C_{h\delta_a}\delta_a + C_{h\delta_{a,tab}}k_{\delta_{a,tab}}\delta_a\right], & \text{for } \delta_a = -\delta_{a,L} \end{cases}$$

Where:

$C_{h,a,R}$	Control surface hinge moment, RHS aileron
$C_{h,a,L}$	Control surface hinge moment, LHS aileron
$C_{h0,a}$	Hinge moment coefficient at zero angle of attach
$C_{h\alpha}$	Hinge moment coefficient at (wing) angle of attach α
$C_{h\delta_a}$	Hinge moment coefficient at aileron anlgular deflection δ
$C_{h\delta_{a,tab}}$	Hinge moment coefficient at tab anlgular deflection δ
$k_{\delta_{a,tab}}$	Gearing ratio at aileron anlgular deflection δ no gearing utilized ∴= 0.0

The aileron hinge moment is given by:

Aileron hinge moment = $P_{dyn}*A_{ref}*C_{ref}*C_{h,a,L}$

Data Applicable Aileron Critical Cases

Mach	$C_{h0,a}$ $\alpha = 0$ $b_{0,a}$ [-]	$C_{h\alpha}$ $b_{1,a}$ [rad^{-1}]	$C_{h\delta_{a,Up}}$ $b_{2,a,Up}$ [rad^{-1}]	$C_{h\delta_{a,Dn}}$ $b_{2,a,Dn}$ [rad^{-1}]
0.18	*-0.113*	*-0.246*	*-0.413*	*-0.309*
0.3	*-0.113*	*-0.246*	*-0.469*	*-0.365*
0.5	*-0.113*	*-0.246*	*-0.630*	*-0.390*
0.6	*-0.113*	*-0.227*	*-0.642*	*-0.390*
0.65	*-0.113*	*-0.207*	*-0.653*	*-0.390*
0.7	*-0.112*	*-0.185*	*-0.659*	*-0.390*
0.72	*-0.111*	*-0.162*	*-0.665*	*-0.390*
0.74	*-0.110*	*-0.140*	*-0.665*	*-0.390*
0.76	*-0.106*	*-0.103*	*-0.653*	*-0.344*
0.78	*-0.095*	*0.000*	*-0.596*	*-0.321*
0.81	*-0.113*	*-0.246*	*-0.413*	*-0.309*

	Ailerons
Reference Area [m^2]	*0.535, per panel*
Reference Chord [m]	*0.284*

Table 6-10 Coefficents vs mach number

	AoA deg	AoA rad	Dyn Pres N/m^2	Mach	δ deg	δ rad	Aref m^2	Cref m		Ch,0,a	Chaα	Chδaup	Chδadn	Ch,a,L
VG-MF-003_A5	5	0.087	21008	0.55	0	0.000	0.535	0.284	3	-0.113	-0.237	-0.636	-0.390	0.1336
VG-MF-402_AN6	-6	-0.105	13633	0.74	0	0.000			7	-0.110	-0.140	-0.665	-0.390	0.0953
RP-MT51-003-A066	0.66	0.012	21008	0.55	3	0.052			3	-0.113	-0.237	-0.636	-0.390	0.1361
RP-MT12-202-A171	1.71	0.030	13633	0.65	10	0.175			4	-0.113	-0.207	-0.653	-0.390	0.1872
RP-MT12-502-AN225	-2.25	-0.039	8575	0.74	-22	-0.384			8	-0.110	-0.140	-0.665	-0.390	-0.1508

Table 6-11 Data for critical aerodynamic aileron load cases.

	AoA deg	AoA rad	Hm Nm
VG-MF-003_A5	5	0.087	**426.6**
VG-MF-402_AN6	-6	-0.105	**197.5**
RP-MT51-003-A066	0.66	0.012	**434.6**
RP-MT12-202-A171	1.71	0.030	**387.9**
RP-MT12-502-AN225	-2.25	-0.039	**-196.5**

Table 6-12 Aileron hinge moments for critical aerodynamic cases.

Example Calculation

Load Case: RP-MT51-003-A066

P_{dyn}		= 21008 N/m^2	Table 6-11
A_{ref}		= 0.535 m^2	Table 6-10
C_{ref}		= 0.284 m^2	Table 6-10
$C_{h,a,L}$	= (-0.113)+(-0.237)*0.012+(-0.39)*0.052	= 0.1361	ref. [15] Eq. 89
Hm	= 21008*0.535*.284*.1361	= 434.6 Nm	

6.5 Appendix E Geometric Data for Calculation File [2], Aileron Box

Presented in this appendicle is geometric data for:

- Calculation file 2 *PC24_Aileron_Box-01*

Geometric data (and allowables) for each calculation file is input to the Excel workbook via a single worksheet.

- All geometric data is defined on worksheet: *Geometry.*
- All allowables data is defined on worksheet: *Allowables.*

Aileron Geometry: "BAY" Related Properties for Calculation File [2]

				3					Mid Hinge					OB Hinge			
Bay Id	**1**	**2**	**3a**	**3b**	**3c**	**4**	**5**	**6**	**7**	**8**	**9**	**10**	**11**	**12**	**13**		
Rib Id	**1-1A**	**1A-2**	**2-2A**	**2A-2B**	**2B-3**	**3-4**	**4-5**	**5-6**	**6-7**	**7-8**	**8-9**	**9-10**	**10-11**	**11-12**	**12-OB**		
Upper Skin, box zone														Hash key = US		**Units**	**Comments**
Panel Id	12010	12020		12030		12040	12050	12060	12070	12080	12090	12100	12110	12120	12130		PESS analysis PANEL_ID
Mat =	2024-T3	2024-T3	2024-T3	2024-T3	2024-T3	2024-T3	2024-T3	2024-T3	2024-T3	2024-T3	2024-T3	2024-T3	2024-T3	2024-T3	2024-T3		Material type and heat treatment
Sheet Thk =	0.080	0.080	0.080	0.080	0.080	0.080	0.080	0.080	0.080	0.080	0.080	0.080	0.080	0.080	0.080	inch	Sheet thickness
Sheet Thk =	2.0	2.0	2.0	2.0	2.0	2.0	2.0	2.0	2.0	2.0	2.0	2.0	2.0	2.0	2.0	mm	Sheet thickness
Mid =	14	14	14	14	14	14	14	14	14	14	14	14	14	14	14		See Allowable sheet: B basis
t,panel =	1.20	1.00		1.20		1.10	0.90	1.00	1.00	1.00	0.80	0.80	0.80	0.80	0.80	mm	Panel (centre) thickness
t_{landFS} =	1.20	1.20	1.35	1.35	1.35	1.20	1.20	1.20	1.20	1.20	1.20	1.20	1.20	1.20	1.20	mm	Upper skin land (pad-up) at front spar
t_{landRS} =	2.00	2.00	2.00	2.00	2.00	2.00	2.00	1.70	1.70	1.70	1.70	1.70	1.70	1.70	1.70	mm	Upper skin land (pad-up) at rear spar
Radius =	2341	2380		2517		2792	3164	2847	2934	3125	3447	4057	5248	2910	Flat	mm	Panel curvature, PESS data
a(span) =	63	61		200		200	144	170	125	125	175	183	180	124	133	mm	Panel size, PESS data average edge E1 & E3
b(rib) =	194	191		186		178	171	192	184	177	169	160	151	143	136	mm	Panel size, PESS data average edge E2 & E4
Lower Skin, Box Zone														Hash key = LS		**Units**	**Comments**
Panel Id	22010	22020	22031	22032	22033	22040	22050	22060	22070	22080	22090	22100	22110	22120	22130		PESS analysis PANEL_ID
Mat =	2024 T3	2024 T3	2024 T3	2024 T3	2024 T3	2024 T3	2024 T3	2024 T3	2024 T3	2024 T3	2024 T3	2024 T3	2024 T3	2024 T3	2024 T3		Material type and heat treatment
Sheet Thk =	0.080	0.080	0.080	0.080	0.080	0.080	0.080	0.080	0.080	0.080	0.080	0.080	0.080	0.080	0.080	inch	Sheet thickness
Sheet Thk =	2.0	2.0	2.0	2.0	2.0	2.0	2.0	2.0	2.0	2.0	2.0	2.0	2.0	2.0	2.0	mm	Sheet thickness
Mid =	14	14	14	14	14	14	14	14	14	14	14	14	14	14	14		See Allowable sheet: B basis
t,panel =	1.20	1.20	1.10	1.55	1.10	1.10	1.10	1.00	1.00	1.00	0.90	0.80	0.80	0.80	0.80	mm	Panel (centre) thickness
tlandFS =	1.20	1.20	1.55	1.55	1.55	1.55	1.20	1.20	1.20	1.20	1.20	1.20	1.20	1.20	1.20	mm	Lower skin land (pad-up) at front spar
tlandRS =	1.50	1.50	1.50	1.50	1.50	1.50	1.50	1.70	1.70	1.70	1.70	1.70	1.70	1.70	1.70	mm	Lower skin land (pad-up) at rear spar
Radius =	2113	2092	2033	Flat	2067	2008	1984	1684	1639	1598	1551	1496	1445	1404	1378	mm	Panel curvature, PESS data
a(span) =	64	36	41	75	84	199	143	170	125	125	175	183	180	130	132	mm	Panel size, PESS data average edge E1 & E3
b(rib) =	190	188	185	49	179	174	168	193	185	179	171	162	152	144	138	mm	Panel size, PESS data average edge E2 & E4
Front Spar, web														Hash key = FS		**Units**	**Comments**
Panel Id	41010	41020	41031	41032	41033	41040	41050	41060	41070	41080	41090	41100	41110	41120	41130		PESS analysis PANEL_ID
Mat =	2124-T851	2124-T851	2124-T851	2124-T851	2124-T851	2124-T851	2124-T851	2124-T851	2124-T851	2124-T851	2124-T851	2124-T851	2124-T851	2124-T851	2124-T851		Material type and heat treatment
PlateThk =	3.5	3.5	3.5	3.5	3.5	3.5	2.0	2.0	2.0	2.0	2.0	2.0	2.0	2.0	2.0	inch	Plate thickness
Plate Thk =	89	89	89	89	89	89	51	51	51	51	51	51	51	51	51	mm	Plate thickness
VV0405 =	4.0-5.0"	4.0-5.0"	4.0-5.0"	4.0-5.0"	4.0-5.0"	4.0-5.0"	2.0-3.0"	2.0-3.0"	2.0-3.0"	2.0-3.0"	2.0-3.0"	2.0-3.0"	2.0-3.0"	2.0-3.0"	2.0-3.0"		VV0405-02C: billet + 1 thickness class
Mid =	9	9	9	9	9	9	5	5	5	5	5	5	5	5	5		See Allowable sheet: A basis.
t,min =	1.45	1.45	1.45	1.45	1.45	1.2	1.0	1.0	1.0	1.0	1.0	1.0	1.0	1.0	1.0	mm	Web thickness
a(span) =	72	45	25	17	84	199	135	178	125	125	174	183	179	130	126	mm	Web shear panel dimension
b =	73	72	70	75	68	66	62	60	58	56	53	50	47	44	42	mm	Web shear panel dimension
Dia =	N/A	N/A	N/A	38.1	N/A	30	30	28	28	26	26	25	22	22	20	mm	Spar Web lightening hole diameter
D/h,dia =	N/A	N/A	N/A	0.51	N/A	0.45	0.48	0.47	0.48	0.46	0.49	0.50	0.47	0.50	0.48		Lightening hole/web height ratio
Front Spar, upper flange															FSUp	**Units**	**Comments**
Flange Id	42010	42020	42031	42032	42033	42040	42050	42060	42070	42080	42090	42100	42110	42120	42130		PESS analysis and ID of FEMAP gr
t,flg =	1.70	1.70	1.70	1.70	1.70	1.20	1.10	1.00	1.20	1.20	1.00	1.00	1.00	1.00	1.00	mm	Spar cap flange thickness
w,flg =	34.0	34.0	34.0	28.0	28.0	28.0	28.0	28.0	28.0	28.0	28.0	28.0	28.0	28.0	28.0	mm	Tee cap, full width
Type	CR3224	CR3224	CR3224	CR3224	CR3224	CR3224	CR3224	CR3224	CR3224	CR3224	CR3224	CR3224	CR3224	CR3224	CR3224		Box side fastener type
Dash No.	4	4	4	4	4	4	4	4	4	4	4	4	4	4	4		Box side fasteners diameter
Dia =	3.2	3.2	3.2	3.2	3.2	3.2	3.2	3.2	3.2	3.2	3.2	3.2	3.2	3.2	3.2	mm	Box side fasteners diameter
No. off	2	3		12		11	8	9	7	7	10	10	10	7	7		Box side fasteners
$Pitch_{max}$ =	22.4	19.2		25.4	25.4	19.2	19.2	19.2	19.20	19.20	19.20	19.20	19.20	19.20	19.20	mm	Round up to 6D, 7D and 8D
Front Spar, lower flange															FSLo	**Units**	**Comments**
Flange Id	43010	43020	43031	43032	43033	43040	43050	43060	43070	43080	43090	43100	43110	43120	43130		PESS analysis and ID of FEMAP gr
t,flg =	1.75	1.75	1.75	1.75	1.75	1.20	1.10	1.00	1.20	1.20	1.00	1.00	1.00	1.00	1.00	mm	Spar cap flange thickness
w,flg =	40.0	40.0	40.0	28.0	28.0	28.0	28.0	28.0	28.0	28.0	28.0	28.0	28.0	28.0	28.0	mm	Tee cap, full width
Type	CR3224	CR3224	CR3224	CR3224	CR3224	CR3224	CR3224	CR3224	CR3224	CR3224	CR3224	CR3224	CR3224	CR3224	CR3224		Box side fastener type
Dash No.	4	4	4	4	4	4	4	4	4	4	4	4	4	4	4		Box side fasteners diameter
Dia =	3.2	3.2	3.2	3.2	3.2	3.2	3.2	3.2	3.2	3.2	3.2	3.2	3.2	3.2	3.2		Box side fasteners diameter
No. off	3	3	2	5	4	11	8	9	7	7	10	10	10	7	7		Box side fasteners
$Pitch_{max}$ =	22.4	19.2	22.4	19.20	19.20	19.20	19.20	19.20	19.20	19.20	19.20	19.20	19.20	19.20	19.20	mm	Round up to 6D, 7D and 8D
Rear Spar, web														Hash key = RS		**Units**	**Comments**
Panel Id	45010	45020	45031	45032	45033	45040	45050	45060	45070	45080	45090	45100	45110	45120	45130		PESS analysis PANEL_ID
Mat =	2024-T42	2024-T42	2024-T42	2024-T42	2024-T42	2024-T42	2024-T42	2024-T42	2024-T42	2024-T42	2024-T42	2024-T42	2024-T42	2024-T42	2024-T42		Material type and heat treatment
Sheet Thk =	0.040	0.040	0.040	0.040	0.040	0.040	0.040	0.032	0.032	0.032	0.032	0.032	0.032	0.032	0.032	inch	Sheet thickness
Sheet Thk =	1.00	1.00	1.00	1.00	1.00	1.00	1.00	0.80	0.80	0.80	0.80	0.80	0.80	0.80	0.80	mm	Sheet thickness
Mid =	15	15	15	15	15	15	15	15	15	15	15	15	15	15	15		See Allowable sheet: A basis
t,web =	1.00	1.00	1.00	1.00	1.00	1.00	1.00	0.80	0.80	0.80	0.80	0.80	0.80	0.80	0.80	mm	Web thickness
a(span) =	72	45	25	17	84	199	135	178	125	125	174	183	179	130	126	mm	Web shear panel dimension
b =	73	72	70	75	68	66	62	60	58	56	53	50	47	44	42	mm	Web shear panel dimension
Dia =	N/A	N/A	N/A	38.1	N/A	30	30	28	28	26	26	25	22	22	20	mm	Spar Web lightening hole
D/h,dia =	N/A	N/A	N/A	0.51	N/A	0.45	0.48	0.47	0.48	0.46	0.49	0.50	0.47	0.50	0.48		Spar Web lightening hole
Rear Spar, upper flange															RSUp	**Units**	**Comments**
Panel Id	46010	46020	46031	46032	46033	46040	46050	46060	46070	46080	46090	46100	46110	46120	46130		PESS analysis PANEL_ID
t,flg =	1.00	1.00	1.00	1.00	1.00	1.00	1.00	0.80	0.80	0.80	0.80	0.80	0.80	0.80	0.80	mm	Flange thickness
b,flg =	20.0	20.0	20.0	20.0	20.0	20.0	20.0	30.0	30.0	30.0	30.0	30.0	30.0	30.0	30.0	mm	
Type	NAS1097	NAS1097	NAS1097	NAS1097	NAS1097	NAS1097	NAS1097	CR3224	CR3224	CR3224	CR3224	CR3224	CR3224	CR3224	CR3224		Box side fasteners
Dash No.	4	4	4	4	4	4	4	4	4	4	4	4	4	4	4		Box side fasteners
Dia =	3.2	3.2	3.2	3.2	3.2	3.2	3.2	3.2	3.2	3.2	3.2	3.2	3.2	3.2	3.2	mm	
No. off	1	3		10		9	8	7	6	6	9	9	9	6	7		Box side fasteners
Rear Spar, low$er flange															RSLo	**Units**	**Comments**
Panel Id	47010	47020	47031	47032	47033	47040	47050	47060	47070	47080	47090	47100	47110	47120	47130		PESS analysis PANEL_ID
t,flg =	1.00	1.00	1.00	1.00	1.00	1.00	1.00	0.80	0.80	0.80	0.80	0.80	0.80	0.80	0.80	mm	Flange thickness
b,flg =	5.0	5.0	5.0	5.0	5.0	5.0	5.0	24.0	24.0	24.0	24.0	24.0	24.0	24.0	24.0	mm	Flange width
Type	CR3224	CR3224	CR3224	CR3224	CR3224	CR3224	CR3224	CR3224	CR3224	CR3224	CR3224	CR3224	CR3224	CR3224	CR3224		Box side fastener type
Dash No.	4	4	4	4	4	4	4	4	4	4	4	4	4	4	4		Box side fastener dia
Dia =	3.2	3.2	3.2	3.2	3.2	3.2	3.2	3.2	3.2	3.2	3.2	3.2	3.2	3.2	3.2	mm	Box side fastener dia
No. off	2	3	3	4	4	9	8	7	6	6	9	9	9	6	7		Box side number of fasteners/bay

Table 6-13 Aileron box geometry, “bay” related data for calculation file [2].

Aileron Geometry: "Rib" Related Properties for Calculation File [2]

			Hinge 1							Hinge 2					Hinge 3			
Rib Id	**1**	**1A**	**2**	**2A**	**2B**	**3**	**4**	**5**	**6**	**7**	**8**	**9**	**10**	**11**	**12**	**13**		
Rib Web, Box Zone								Hash key =								Rib	Units	Comments
Stiffener Id	35010	35011	35020	35021	35022	35030	35040	35050	35060	35070	35080	35090	35100	35110	35120	35130		PESS analysis STRINGER_ID
Mat =	2124-T851	2024-T42	2024-T42	2024-T42	2024-T42	2024-T42	2024-T42	2024-T42	2024-T42	2024-T42	2024-T42	2024-T42	2024-T42	2024-T42	2024-T42	2124-T851		Material type and heat treatment
Plate Thk =	2.5															2.5	inch	Machined rib, material plate thickness
Plate Thk =	63.5															63.5	mm	Machined rib, material plate thickness
Sheet Thk =		0.063	0.050	0.050	0.05	0.04	0.032	0.032	0.032	0.04	0.032	0.025	0.025	0.025	0.032		inch	Formed rib sheet thickness
Sheet Thk =		1.60	1.30	1.30	1.30	1.00	0.80	0.80	0.80	1.00	0.80	0.60	0.60	0.60	0.80		mm	Formed rib sheet thickness
Mid =	8	15	15	15	15	15	15	15	15	15	15	15	15	15	15	8		See Allowable sheet: B basis
t =	0.8	1.60	1.30	1.30	1.30	1.00	0.80	0.80	0.80	1.00	0.80	0.60	0.60	0.60	0.80	0.8	mm	Web and flange thickness
h ,FS =	73	72	71.0			68.0	64.0	62.0	59.0	57.0	55.0	52.0	49.0	46.0	43.0	56.9	mm	Length from pivot joint to base interface
h,RS =	29	29	28			27.0	25.0	19.0	18.0	18.0	17.0	16.0	16.0	15.0	14.0	-	mm	Length from pivot joint to upper section A
h,avg =	51	50.5	49.5			47.5	44.5	40.5	38.5	37.5	36.0	34.0	32.5	30.5	28.5	-	mm	Length from pivot joint to lower section A
h,dia =	50.0	45.6	45.9	N/A	N/A	44.5	42.6	40.8	38.4	35.8	34.8	33.1	30.5	27.9	25.3	113.8	mm	Height between upper and lower fastener rows
D =	25	21.0	25.0	N/A	N/A	18.0	18.0	22.0	20.0	20.0	20.0	18.0	18.0	16.0	16.0	88.8	mm	Height between intermediate fastener rows
D/h,dia =	0.50	0.46	0.55			0.40	0.42	0.5	0.52	0.56	0.57	0.54	0.59	0.57	0.63	0.6	mm	projected on to base. +ve = projected point is above
Rib Upper Flange, Box zone								Hash key =								RibUp	Units	Comments
Stiffener Id	*36010*	*36011*	*36020*	*36021*	*36022*	*36030*	*36040*	*36050*	*36060*	*36070*	*36080*	*36090*	*36100*	*36110*	*36120*	36130		PESS analysis STRINGER_ID
t,flg =	1.0	1.6	1.3			1.0	0.8	0.8	0.8	1.0	0.8	0.6	0.6	0.6	0.8	1.0	mm	Flange tthickness
b,flg =	13.6	16.3	15.1			14.5	13.4	13.4	13.5	14.0	13.4	12.8	12.8	13.1	13.4	13.6	mm	Flange width-t,web/2. Flange width from dwg(pdf) dime
cord =	194.5	191.3	188.8			180.8	172.8	195.4	185.9	179.5	173.1	164.2	154.8	145.6	138.9	115.4	mm	Length of rib upper edge
tland =	1.2	1.2	1.3			1.3	1.2	1.2	1.2	1.2	1.2	1.2	1.2	1.2	1.2	1.6	mm	Thickness of upper skin land
Type	CR3224	CR3224	CR3224			CR3224	CR3224	CR3224	CR3224	CR3224	CR3224	CR3224	CR3224	CR3224	CR3224	CR3224	mm	Fastener type
Dash No.	4	4	4			4	4	4	4	4	4	4	4	4	4	4		Fastener diameter
No. off	10	11	9			8	8	8	8	8	8	7	7	6	5	5		Number of fasteners / bay
Pitch =	25	25	25			25	25	25	25	25	25	25	25	25	25	25		Maximum pitch assumed to be <8D
Rib Lower Flange, Box Zone								Hash key =								RibLo	Units	Comments
Stiffener Id	*37010*	*37011*	*37020*	*37021*	*37022*	*37030*	*37040*	*37050*	*37060*	*37070*	*37080*	*37090*	*37100*	*37110*	*37120*	*37130*		PESS analysis STRINGER_ID
t,flg =	1.1	1.6	1.3	1.3	1.3	1.0	0.8	0.8	0.8	1.0	0.8	0.6	0.6	0.6	0.8	1.0	mm	Flange t
b,flg =	13.6	16.3	15.1	15.2	15.2	14.5	13.4	13.4	13.5	14.0	13.4	12.8	12.8	13.1	13.4	13.6	mm	Flange width-t,web/2
cord =	191.0	188.2	185.7	184.1	181.1	177.8	169.9	197.4	188.5	182.0	175.5	166.5	157.0	147.7	140.9	118.7	mm	Length of rib lower edge (from PESS)
tland =	1.6	1.2	1.5	1.5	1.5	1.5	1.5	1.2	1.2	1.2	1.2	1.2	1.2	1.2	1.2	1.6	mm	Thickness of upper skin land
Type	CR3224	CR3224	CR3224	CR3224	CR3224	CR3224	CR3224	CR3224	CR3224	CR3224	CR3224	CR3224	CR3224	CR3224	CR3224	CR3224	mm	Fastener type
Dash No.	4	4	4	4	4	4	4	4	4	4	4	4	4	4	4	4		Fastener diameter
No. off	11	11	9	9	9	8	8	8	8	8	8	7	7	6	4	5		Number of fasteners / bay
Rib to Front Spar Joints																RibFSJ	Units	Comments
Type =		HLT412	HLT412	MS20470AD	MS20470AD	MS20470AD	MS20470AD	MS20470AD	MS20470AD	MS20470AD	MS20470AD	MS20470AD	MS20470AD	MS20470AD	MS20470AD			Fastener Type
Dash No. =		5	5	5	5	4	4	4	4	4	4	4	4	4	4			Dasn number
Dia =		4.15	4.15	4.0	4.0	3.2	3.2	3.2	3.2	3.2	3.2	3.2	3.2	3.2	3			Fastener dia
No. off		3	3	2	2	3	3	3	3	3	2	2	2	2	2		mm	Pitch between outer fasteners, centre fastener assumed
Pitch =		38.2	36.8	16.8	16.8	36.7	34.1	28.0	29.8	27.4	25.3	20.7	20.0	14.9	13.9			Number fasteners in the joint
trib =	0.0	1.6	1.3	1.3	1.3	1.0	0.8	0.8	0.8	1.0	0.8	0.6	0.6	0.6	0.8	0.0	mm	Rib thickness at joint
tspar =	-	2.0	1.3	1.3	1.3	1.0	1.0	1.0	1.0	1.0	1.0	1.0	1.0	1.0	1.0		mm	Spar vertical stiffener thickness
Rib to Rear Spar Joints																RibRS-web	Units	Comments
Joint Type	S Clip T1	S Clip T2	S Clip T2	S Clip T2	S Clip T2	S Clip T2	S Clip T2	S Clip T1	No clip	No clip	No clip	No clip	No clip	No clip	No clip	No clip		Shear connection between rib and rear spar
Type =	MS20470AD	MS20470AD	MS20470AD	MS20470AD	MS20470AD	MS20470AD	MS20470AD	MS20470AD	-	-	-	-	-	-	-	-		Rib/R spar web Fastener Type (upper & lower)
Dash No. =	4	4	4	4	4	4	4	4	-	-	-	-	-	-	-	-		Rib/R spar web Dash number (upper & lower)
Dia =	3.2	3.2	3.2	3.2	3.2	3.2	3.2	3.2	-	-	-	-	-	-	-	-		Rib/R spar web Fastener dia (upper & lower)
t_{clip} =	1.30	1.30	1.30	1.30	1.30	1.00	0.80	1.00										Shear clip thickness
t_{Rspar} =	1.00	1.00	1.00	1.00	1.00	1.00	1.00	1.00										Rear spar thickness at shear clip location
e =	10.2	10.3	9.7	9.2	10.1	8.5	8.4	11.5	-	-	-	-	-	-	-	-		First clip fastener to rib web face
Pitch =	16.5	12.8	12.9	12.9	12.8	12.8	12.8	16.0	-	-	-	-	-	-	-	-		Pitch between shear clip fasteners
Rib to Rear Spar Joints - Inboard Part																RibRS1-flg	Units	Comments
Type =	CR3224	CR3224	CR3224	CR3224	CR3224	CR3224	CR3224	CR3224										Fastener Type (upper & lower flange.
Dash No. =	4	4	4	4	4	4	4	4										Dash number (upper & lower flange).
Dia =	3.2	3.2	3.2	3.2	3.2	3.2	3.2	3.2										Fastener dia (upper & lower flange).
h =	29.0	28.6	29.5	29.3	28.7	27.9	26.5	22.5										Distance between rib flanges (at end of rib).
t_{up} =	1.2	1.20	1.35	1.35	1.35	1.35	1.25	0.8										Thickness of upper skin land
t_{low} =	1.2	1.20	1.55	1.55	1.55	1.55	1.55	0.8										Thickness of lower skin land
Rib to Rear Spar Joints - Outboard Part																RibRS2-flg	Units	Comments
Type =								CR3224	CR3224	CR3224	CR3224	CR3224	CR3224	CR3224	CR3224	CR3224		Fastener Type (upper & lower flange.
Dash No. =								4	4	4	4	4	4	4	4	4		Dash number (upper & lower flange).
Dia =								3.2	3.2	3.2	3.2	3.2	3.2	3.2	3.2	3		Fastener dia (upper & lower flange).
h =								22.5	18.8	18.2	17.6	16.8	15.9	15.0	14.3	14.3		Distance between rib flanges (at end of rib).
t_{up} =								0.8	0.8	0.8	0.8	0.8	0.8	0.8	0.8	0.8		Thickness of upper spar flange
t_{low} =								0.8	0.8	0.8	0.8	0.8	0.8	0.8	0.8	0.8		Thickness of lower spar flange
Front Spar Vertical Stiffeners at Rib Locations																FSst	Units	Comments
Stiffener Id	44010	44011	44020	44021	44022	44030	44040	44050	44060	44070	44080	44090	44100	44110	44120	44130		PESS analysis STRINGER_ID
t1,flg =	-	-	-	-	-	1.0	1.0	1.0	1.0	-	1.0	1.0	1.0	1.0	-	1.0	mm	FWD stiffener
b1,flg =	-	-	-	-	-	17.0	17.0	17.0	17.0	-	17.0	17.0	17.0	17.0	-		mm	FWD stiff, fom web fwd surface to extreme edge
t2,flg =	-	2.0	1.3	1.3	1.3	1.0	1.0	1.0	1.0	1.0	1.0	1.0	1.0	1.0	1.0	1.0	mm	Aft stiffener
b2,flg =	-	20.0	20	20	20	17.2	17.3	17.2	17.3	17.3	17.3	17.3	17.3	17.3	17.3		mm	Aft stiff, fom web aft surface to extreme edge

Table 6-14 Aileron box geometry, “rib” related data for calculation file [2].

6.6 Appendix F Geometric Data for Calculation File [8], Front spar

Presented in this appendicle is geometric data for:

- Calculation file 8 *PC24_Aileron_Fspar_lugs_splice-01*

Geometric data (and allowables) for each calculation file is input to the Excel workbook via a single worksheet.

- All geometric data is defined on worksheet: *Geometry.*
- All allowables data is defined on worksheet: *Allowables.*

Front Spar Splice Between Ribs 3 & 4 Properties for Calculation File [8]

	Spar IB	Spar OB	Box Skin	LE Skin	Rib 1a		Units	Comments
Material Data						Hash =		
Mat =	2124-T851	2124-T851	2024-T3	2024-T42	2024-T42			
PlateThk =	3.5	2.0	0.080	0.063	0.063		inch	Billet/sheet size thickness
PlateThk =	89	51	2.0	2	2		mm	Billet/Sheet size thickness
VV0405 =	4.0 - 5.0	2.0 - 3.0	N/A	N/A	N/A			Billet size thickness
Basis =	A	A	B	B	B			A or B basis
Mid =	9	7	14	15	15			Mat Id see Allowables sheet

	LE					LE			
Row Id	1	2	3	4	5	6	7		
Fasteners Details and Splice Geometry						Hash =	Splice	Units	Comments
Type =	CR3224	CR3224	MS20470AD	MS20470AD	MS20470AD	CR3224	CR3224		
Dash No =	5	5	5	5	5	5	5		
Dia =	4.00	4.00	4.00	4.00	4.00	4.00	4.00		
No cols=	6	6	6	4	6	6	6		
Max Pitch =	20	20	20	20	20	20	20	mm	Max pitch (spar cut)
Skin-Mat =	2024-T42	2024-T3				2024-T42	2024-T3		Materials for LE and box skins
Skin-Mid =	15	14				15	14		Material Id from *Allowables* sheet
Skin Basis =	B	B				B	B		Class 2 part multiple load path
Skin-t =	1.60	1.50				1.56	1.60	mm	Skin land thickness
Spar-t =	1.2	1.2	1.2	1.2	1.2	1.2	1.2	mm	Front spar web
Splice-Mat =	2024-T3	2024-T3	2024-T3	2024-T3	2024-T3	2024-T3	2024-T3		All splices use the same material
Splice-Mid =	14	14	14	14	14	14	14		Material Id from *Allowables* sheet
Splice Basis =	B	B	B	B	B	B	B		Class 2 part multiple load path
FWD Splice-t =	1.30	1.30	1.30	1.30	1.30	1.30	1.30	mm	Minimum where 2 splice overlap
AFT Splice-t =	1.30	1.30	1.30	1.30	1.30	1.30	1.30	mm	Minimum where 2 splice overlap

Column Id	1	2	3	4	5	6	Units	Comments
Fastener Locations: X, C2710008 (span direction)						FasX		
R1	-41.7	-25.7	-9.7				mm	X = span direction
R2	-41.7	-25.7	-9.7				mm	Fastener location, relative local cord2710008
R3	-41.7	-25.7	-9.7				mm	
R4		-25.7	-9.7		Symmetric		mm	
R5	-41.7	-25.7	-9.7				mm	
R6	-41.7	-25.7	-9.7				mm	
R7	-41.7	-25.7	-9.7				mm	
Fastener Locations: Y, C2710008 (up direction)						FasY	Units	Comments
R1	66.4	66.4	66.4				mm	X = vertical direction
R2	66.4	66.4	66.4				mm	Fastener location, relative local cord2710008
R3	52.3	52.3	52.3				mm	
R4		35.2	35.2		Symmetric		mm	
R5	18.1	18.1	18.1				mm	
R6	-0.7	-0.7	-0.7				mm	
R7	-0.7	-0.7	-0.7				mm	
Column Id	1-2	2-3	3-4	4-5	5-6	6-7		
Fastener: X -Pitch						FasX-pitch	Units	Comments
R1	16.0	16.0	19.4				mm	X = span direction
R2	16.0	16.0	19.4				mm	Fastener pitch
R3	16.0	16.0	19.4				mm	
R4		16.0	19.4		Symmetric		mm	
R5	16.0	16.0	19.4				mm	
R6	16.0	16.0	19.4				mm	
R7	16.0	16.0	19.4				mm	

Table 6-15 Front spar geometry, "splice joint" related data for calculation file [8].

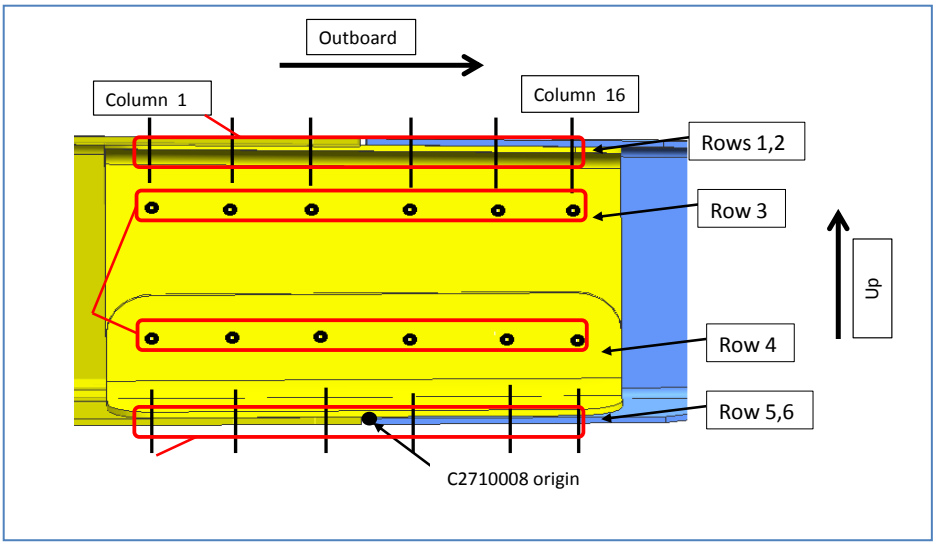

Figure 6-7: Front spar geometry, "splice joint" related data for calculation file [8]

Front Spar Cut-Out Between Ribs 2 & 3 Properties for Calculation File [8]

Cut Out Geometry (nomenclature as PSM5.3.5.7)		Hash Cutout_		
Bay:			Units	Comments
a =	75.0		mm	Width of bay
b =	70.8		mm	Height of bay web
tw =	1.4		mm	Web thickness
Hole:			Units	Comments
r =	8.0		mm	Assumed rectangular section
Ls =	68.2		mm	Slot length(excluding R)
b_hole =	38.1		mm	Slot height
Cap and Web:			Units	Comments
Wu =	35.7		mm	Upper spar cap width
t1u =	1.6		mm	Thickness of upper web
tuskin =	1.3		mm	Thickness of upper skin land
Wl =	35.8		mm	Lower spar cap width
t1l =	1.6		mm	Thickness of lower web
tlskin =	1.6		mm	Thickness of lower skin land

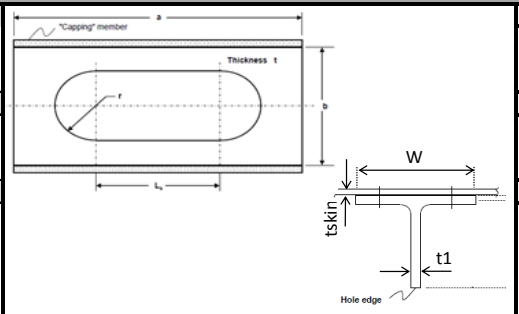

Table 6-16 Front spar geometry, "cutout" related data used by calculation file [8].

Front Spar Control Arm for FCS Rod 9 Properties for Calculation File [8]

Control Arm (rod9)				
Root Section		Hash CAroot	Units	Comments
a =	32.4		mm	Root section width
b =	16.7		mm	Root section thickness
L =	44.9		mm	Moment arm: rod 9 centre to root section plane
Lug		Hash CALug	Units	Comments
D =	31.75		mm	Lug:Bore diameter
DPO =	7.94		mm	Lug:Pin outer diameter
t =	16.66		mm	Lug: Uniform thickness
e =	23.81		mm	Lug: Bore center to end radius length
R =	23.81		mm	Lug: End radius or Lug radius
W/2 =	23.81		mm	Lug: "W" Lug effective width
phi =	0.00		mm	Lug: Lug taper angle
Di,bh =	7.94		mm	Lug: Bush Inner Diameter
Do,bh =	31.75		mm	Lug: Bush Outer Diameter
Bush Mat =	N/A			Lug: Bush material - bush is a bearing
Bush Mid =	N/A			Lug: Bush mat Id see Allowables sheet

Table 6-17 Front spar geometry, FCS control arm related data for calculation file [8].

Front Spar Aileron Hinge (IB) Idealized Lug Properties for Calculation File [8]

Inboard Support Hinge							
Lugs	IB Lug	OB Lug			Hash H1Lugs	Units	Comments
D =	15.9	12.7				mm	Lug:Bore diameter
DPO =	9.50	9.50				mm	Lug:Pin outer diameter
t =	5.25	5.3				mm	Lug: Uniform thickness
e =	21.2	21.2				mm	Lug: Bore center to end radius length
R =	21.2	21.2				mm	Lug: End radius or Lug radius
W/2 =	21.2	21.2				mm	Lug: "W" Lug effective width
phi =	0.00	0.0				mm	Lug: Lug taper angle
Di,bh =	12.70	9.53				mm	Lug: Bush Inner Diameter
Do,bh =	15.9	12.5				mm	Lug: Bush Outer Diameter
Bush Mat =	Al-Br	15-5PH					Lug: Bush material - bush is a bearing
Bush Mid =	17	18					Lug: Bush mat Id see Allowables sheet
Hinge Pins					Hash H1Pin	Units	Comments
Mat =	A-286						Pin (bolt) material
Bar Thk =	-					mm	Billet size
Mid =	16						See Allowable sheet: A basis. Note no basis give
Dia. =	9.5					mm	Pin diameter
t1 =	5.3					mm	Pin analysis: PSM 5.3.11.4 fig 11 (Inboard)
g1 =	3.9					mm	Pin analysis: PSM 5.3.11.4 fig 11 (Inboard)
t2 =	20.7					mm	Pin analysis: PSM 5.3.11.4 fig 11
g2 =	2.3					mm	Pin analysis: PSM 5.3.11.4 fig 11 (Outboard)
t3 =	5.3					mm	Pin analysis: PSM 5.3.11.4 fig 11 (Outboard)

Table 6-18 Front spar geometry, hinge (IB) idealized lug related data for calculation file [8].

Front Spar to Rib 1a Joint Properties for Calculation File [8]

	P01/P02/P03	SN100	SN101 - 108	>SN109			
Rib 1a to Front Spar Upper Joint					FS-Uskin	Units	Comments
Type =	CR3224	CR3224	CR3224	CR3224			Upper skin to spar flg fastener
Dash No. =	4	4	4	5			Upper skin to spar flg fastener
Dia =	3.2	3.2	3.2	4			Upper skin to spar flg fastener
t =	1.2	1.2	1.2	1.60		mm	Upper skin land thickness
t_{spar} =	1.7	1.7	1.7	1.7		mm	Upper spar flange thickness
P_{IR} =	24.0	24	24	24.0		mm	Front spar to first rib rivet pitch (for IR buckling)
Rib 1a to Front Spar Joints					FS-R1a	Units	Comments
Type =	HLT412	HLT412	HLT412	HLT412			Upper & lower skin to rib flange fastener
Dash No. =	5	5	5	5			Upper & lower skin to rib flange fastener
Dia =	4.2	4.2	4.2	4.2		mm	Upper & lower skin to rib flange fastener
No. off	3.0	3.0	3.0	3.0		mm	Formed rib thickness
h_{skin} =	69.3	69.3	69.3	69.3		mm	Height between upper and lower skin fasteners
h =	38.2	38.2	38.2	38.2		mm	Distance between outer rib fasteners
trib =	1.6	1.6	1.6	1.6		mm	Rib web thickness
tspar =	2	2	2	2		mm	Spar vertical stiffener thickness
Rib 1a to Front Spar Lower Joint					FS-Lskin	Units	Comments
Type =	CR3224	NAS1921repair	NAS1919M	CR3224			Lower skin to spar flg fastener
Dash No. =	4	4	4	5			Lower skin to spar flg fastener
Dia =	3.2	3.2	3.2	4.0			Lower skin to spar flg fastener
t =	1.2	1.2	1.2	1.70		mm	Lower skin land thickness
t_{spar} =	1.7	1.7	1.7	1.7		mm	Lower spar flange thickness
P_{IR} =	24.5	24.5	24.5	24.5		mm	Front spar to first rib rivet pitch (for IR buckling)

Table 6-19 Front spar geometry, joint to rib 1a related data fo calculation file [8].

6.7 Appendix G Geometric Data for Calculation File [9]

Presented in this appendix is geometric data for:

- Calculation file 9 PC24_aileron_LE_balance_mass-01

Geometric data (and allowables) for each calculation file is input to the Excel workbook via a single worksheet.

- All geometric data is defined on worksheet: *Geometry.*
- All allowables data is defined on worksheet: *Allowables.*

Leading Edge Assy. "BAY" Related Properties for Calculation File [9]

			IB Hinge						Mid Hinge					OB Hinge			
Bay Id	**1**	**2**	**3a**	**3b**	**3c**	**4**	**5**	**6**	**7**	**8**	**9**	**10**	**11**	**12**	**13**		
Rib Id (L)	**1-1A**	**1A-2**	**2-2A**	**2A-2B**	**2B-3**	**3-4**	**4-5**	**5-6**	**6-7**	**7-8**	**8-9**	**9-10**	**10-11**	**11-12**	**12-OB**		
Upper Skin Leading Edge														Hash key = USle		Units	Comments
Panel Id	11010	11020		11030		11040	11050	11060	11070	11080	11090	11100	11110	11120	11130		PESS analysis PANEL_ID
Mat =	2024-T42	2024-T42		2024-T42		2024-T42	2024-T42	2024-T42	2024-T42	2024-T42	2024-T42	2024-T42	2024-T42	2024-T42	2024-T42		Skin material
Sheet Thk =	0.063	0.063		0.063		0.063	0.063	0.063	0.063	0.063	0.063	0.063	0.063	0.063	0.063	inch	Sheet thickness
Sheet Thk =	1.6	1.6		1.6		1.6	1.6	1.6	1.6	1.6	1.6	1.6	1.6	1.6	1.6	mm	Sheet thickness
Mid =	15	15		15		15	15	15	15	15	15	15	15	15	15		See Allowable sheet: B basis
t =	1.60	1.60		1.60		1.60	1.60	1.60	1.60	1.60	1.60	1.60	1.60	1.60	1.60	mm	Panel thickness
Radius =	78.1	Flat		203		83.0	78.0	73.0	70.0	58.0	56.0	56.0	50.0	48.0	43.0	mm	Panel radius from PESS
a(span) =	74	61		200		200	133	181	96	93	175	183	180	104	103		FEM Panel length (span) from PESS
b(rib) =	55	37		37		68	78	64	62	62	61	59	57	55	52	mm	FEM Panel width (cord) from PESS
Lower Skin Leading Edge														Hash key = LSle		Units	Comments
Panel Id	21010	21020		21030		21040	21050	21060	21070	21080	21090	21100	21110	21120	21130		PESS analysis PANEL_ID
Mat =	2024-T42	2024-T42		2024-T42		2024-T42	2024-T42	2024-T42	2024-T42	2024-T42	2024-T42	2024-T42	2024-T42	2024-T42	2024-T42		Skin material
Sheet Thk =	0.063	0.063		0.063		0.063	0.063	0.063	0.063	0.063	0.063	0.063	0.063	0.063	0.063	inch	Sheet thickness
Sheet Thk =	1.6	1.6		1.6		1.6	1.6	1.6	1.6	1.6	1.6	1.6	1.6	1.6	1.6	mm	Sheet thickness
Mid =	15	15		15		15	15	15	15	15	15	15	15	15	15		See Allowable sheet: B basis
t =	1.6	1.6		1.6		1.6	1.6	1.6	1.6	1.6	1.6	1.6	1.6	1.6	1.6	mm	Panel thickness
Radius =	77.0	86.0		Flat		62.0	61.0	59.0	51.0	57.0	56.0	55.0	54.0	53.0	53.0	mm	Panel radius from PESS
a(span) =	75.0	45.0		184.0		200.0	134.0	181.0	100.0	100.0	175.0	183.0	180.0	104.0	103.0		FEM Panel length (span) from PESS
b(rib) =	65.0	64.0		23.0		65.0	63.0	62.0	61.0	59.0	57.0	55.0	53.0	52.0	50.0	mm	FEM Panel width (cord) from PESS
Front Spar														Hash key = FS		Units	Comments
Panel Id	41010	41020	41031	41032		41040	41050	41060	41070	41080	41090	41100	41110	41120	41130		PESS analysis PANEL_ID
Mat =	2124-T851	2124-T851	2124-T851	2124-T851		2124-T851	2124-T851	2124-T851	2124-T851	2124-T851	2124-T851	2124-T851	2124-T851	2124-T851	2124-T851		Spar material
PlateThk =	3.5	3.5	3.5	3.5		3.5	2.0	2.0	2.0	2.0	2.0	2.0	2.0	2.0	2.0	inch	Plate thickness
Plate Thk =	89	89	89	89		89	51	51	51	51	51	51	51	51	51	mm	Plate thickness
VV0405 =	4.0-5.0"	4.0-5.0"	4.0-5.0"	4.0-5.0"		4.0-5.0"	2.0-3.0"	2.0-3.0"	2.0-3.0"	2.0-3.0"	2.0-3.0"	2.0-3.0"	2.0-3.0"	2.0-3.0"	2.0-3.0"		VV0405-02C: billet + 1 thickness class
Mid =	9	9	9	9		9	5	5	5	5	5	5	5	5	5		See Allowable sheet: A basis.
Front Spar to LE upper skin joint														FSUp		Units	Comments
t,flg =	1.70	1.70		1.70		1.20	1.10	1.00	1.20	1.20	1.00	1.00	1.00	1.00	1.00	mm	Spar flange thickness
Type	CR3224	CR3224	CR3224	CR3224		CR3224	CR3224	CR3224	CR3224	CR3224	CR3224	CR3224	CR3224	CR3224	CR3224		Fastener type
Dash No.	4.00	4.00	4.00	4.00		4.00	4.00	4.00	4.00	4.00	4.00	4.00	4.00	4.00	4.00		Fastener dash No.
Dia =	3.20	3.20	3.20	3.20		3.20	3.20	3.20	3.20	3.20	3.20	3.20	3.20	3.20	3.20	mm	Fastener diameter
No. off	2	2		10		11	8	9	4	4	10	10	10	5	4		No. of fasteners in joint
Pitchmax =	22.4	19.2		25.4		19.2	19.2	19.2	19.2	19.2	19.2	19.2	19.2	19.2	19.2	mm	Actual or 6D
Front Spar to lower skin joint														FSLo		Units	Comments
t,flg =	3.00	1.60		1.70		1.20	1.10	1.00	1.20	1.20	1.00	1.00	1.00	1.00	1.00	mm	Spar flange thickness
Type	CR3224	CR3224		CR3224		CR3224	CR3224	CR3224	CR3224	CR3224	CR3224	CR3224	CR3224	CR3224	CR3224		Fastener type
Dash No.	4.0	4.0		4.0		4.0	4.0	4.0	4.0	4.0	4.0	4.0	4.0	4.0	4.0	mm	Fastener dash No.
Dia =	3.2	3.2		3.2		3.2	3.2	3.2	3.2	3.2	3.2	3.2	3.2	3.2	3.2		Fastener diameter
No. off	1	1		10		11	8	9	4	4	10	10	10	5	3		No. of fasteners in joint
Pitchmax =	22.4	19.2		19.2		19.2	19.2	19.2	19.2	19.2	19.2	19.2	19.2	19.2	19.2	mm	Actual or 6D

Table 6-20 Aileron LE geometry, “bay” related data used by calculation file [9].

Leading Edge Assy. "RIB" Related Properties for Calculation File [9]

			IB Hinge							Mid Hinge					OB Hinge			
Rib Id	**1**	**1A**	**2**	**2A**	**2B**	**3**	**4**	**5**	**6**	**7**	**8**	**9**	**10**	**11**	**12**	**13**		
LE Rib															Hash key =	LErib	Units	Comments
Mat =	2124-T851					2124-T851	2124-T851	2124-T851	2124-T851		2124-T851	2124-T851	2124-T851	2124-T851		2124-T851		Rib material
Plate Thk =	1.25					1.0	1.0	1.0	1.0		1.0	1.0	1.0	1.0		1.5	inch	Plate thickness
Plate Thk =	31.75					25.4	25.4	25.4	25.4		25.4	25.4	25.4	25.4		38.1	mm	Plate thickness
VV0405 =																		VV0405-02C: billet + 1 thickness class
Mid =	4					4	4	4	4		4	4	4	4		4		See Allowable sheet: B basis.
LE Rib,web															Hash key =	LErib	Units	Comments
Panel Id	31010					31030	31040	31050	31060		31080	31090	31100	31110		31130		PESS analysis PANEL_ID
t,web =	0.8					1.0	1.0	1.0	1.0		1.0	1.0	1.0	1.0		0.8	mm	Web thickness
h ,FS =	75.0					69.0	69.0	63.0	59.0		56.0	53.0	50.0	47.0		44.0	mm	Height of rib at front spar, entered in PESS as "a"
L =	81.0					71.0	74.0	69.0	66.0		65.0	62.0	59.0	57.0		33.1	mm	Length of rib, front spar web to nose, entered in PESS as
LE Rib, upper flange																LEribUp	Units	Comments
t,flg =	1.0					1.7	1.5	1.3	1.5		1.5	1.5	1.5	1.5	1.0	1.0	mm	flange thickness
Type	CR3224	CR3224		CR3224		CR3224	CR3224	CR3224	CR3224		CR3224	CR3224	CR3224	CR3224	CR3224	CR3224		Fastener type
Dash No.	4	5		5		5	5	5	5		5	5	5	5	5	4		Fastener dash No.
Dia =	3.2	4.0		4.0		4.0	4.0	4.0	4.0		4.0	4.0	4.0	4.0	4.0	3.2	mm	Fastener diameter
No. off	3			3		3	3	3	2		2	2	2	2	2	2		No. of fasteners in joint
Pitch =																	mm	
LE Rib, lower flange																LEribLo	Units	Comments
t,flg =	1.2					1.5	1.3	1.3	1.3		1.3	1.3	1.3	1.5	1.0	1.0	mm	flange thickness
Type	CR3224	CR3224		CR3224		CR3224	CR3224	CR3224	CR3224		CR3224	CR3224	CR3224	CR3224	CR3224	CR3224		Fastener type
Dash No.	4	5		5		5	5	5	5		5	5	5	5	5	4		Fastener dash No.
Dia =	3.2	4.0		4.0		4.0	4.0	4.0	4.0		4.0	4.0	4.0	4.0	4.0	3.2	mm	Fastener diameter
No. off	3	0		3		3		3	3		3	3	2	2	2	2		No. of fasteners in joint
Pitch =																	mm	
LE Rib to front spar vertical stiffener																LEribSP	Units	Comments
Type	-	-				MS20470AD	MS20470AD	MS20470AD	MS20470AD		MS20470AD	MS20470AD	MS20470AD	MS20470AD	-	-		Fastener type
Dash No.	-	-				4	4	4	4		4	4	4	4	-	-		Fastener dash No.
Dia =	-	-				3.2	3.2	3.2	3.2		3.2	3.2	3.2	3.2	-	-	mm	Fastener diameter
No. off	-	-				3	3	3	3		2	2	2	2	-	-		No. of fasteners in joint
L =	-	-				35.7	32.3	30.0	27.5		23	20	17	17		-	mm	Distence between up & low fasteners
t,flg =	-					1.0	1.0	1.0	1.0		1.0	1.0	1.0	1.0	-	-	mm	Flange thickness

Table 6-21 Aileron LE geometry, “rib” related data for calculation file [9].

6.8 Appendix H Geometric Data for Calculation File [12]

Presented in this appendix is geometric data for:

- Calculation file 12 PC24_aileron_Mid-OB_hinge_fittings-01

Geometric data (and allowables) for each calculation file is input to the Excel workbook via a single worksheet.

- All geometric data is defined on worksheet: *Geometry.*
- All allowables data is defined on worksheet: *Allowables.*

Mid and OB Hinge Fittings Geometry Data for Calculation File [12].

	Support hinges						
Location	**Mid**	**Outboard**					
Machined Trim Tab					Brk	Units	Comments
Mat =	2124-T851	2124-T851					Part material
Plate Thk =	2.5	3.0				inch	Billet size
Plate Thk =	63.5	76.2				mm	Billet size
VV0405 =	3.0-4.0"	3.0-4.0"					VV0405-02C: billet + 1 thickness class
Mid(Abasis) =	N/A	N/A					See Allowable sheet: A basis.
Mid(Bbasis) =	8	8					See Allowable sheet: B basis.
Hinge Lug		Mid (In)	Mid (Out)		Lug	Units	Comments
D =		15.0				mm	Lug:Bore diameter
DPO =		12.00				mm	Lug:Pin outer diameter
t =		5.0				mm	Lug: Uniform thickness
e =		20.0				mm	Lug: Bore center to end radius length
R =		18.0				mm	Lug: End radius or Lug radius
W/2 =		18.0				mm	Lug: "W" Lug effective width
phi =		30.0				mm	Lug: Lug taper angle
Di,bh =		44.80				mm	Lug: Bush Inner Diameter
Do,bh =		50.8				mm	Lug: Bush Outer Diameter
Bush Mat =		Al-Br					Lug: Bush material - bush is a bearing
Bush Mid =		17					Lug: Bush mat Id see Allowables sheet
Hinge Pins					Pin	Units	Comments
Mat =		A-286					Pin (bolt) material
Bar Thk =		-				mm	Billet size
Mid =		16					See Allowable sheet: A basis. Note no basis given in ER-2
Dia. =		6.3				mm	Pin diameter
t1 =		2.5				mm	Pin analysis: PSM 5.3.11.4 fig 11 (Inboard)
g1 =		4.7				mm	Pin analysis: PSM 5.3.11.4 fig 11 (Inboard)
t2 =		12.8				mm	Pin analysis: PSM 5.3.11.4 fig 11
g2 =		5.7				mm	Pin analysis: PSM 5.3.11.4 fig 11 (Outboard)
t3 =		2.5				mm	Pin analysis: PSM 5.3.11.4 fig 11 (Outboard)
Section Details					Sec	Units	Comments
b =	19.3	21.0					Critical flange width
tmin =	1.5	1.5					Critical flange thickness
fillr =	2.5	4.0					Fillet radii
Joint to Upper Skin					J-Us	Units	Comments
Type =	HSTB411	HSTB411					
Dash No. =	5	5					
Dia =	4.0	4.0					
t =	1.6	1.6					Bracket flange thickness
tskin =	1.6	1.6					Skin thickness
Skin Mat =	2024-T3	2024-T3					Skin material
Joint to Front Spar					J-Spr	Units	Comments
Type =	HSTB410	HSTB410					
Dash No. =	5	5					
Dia =	4.0	4.0					
t =	1.5	1.5					Bracket flange thickness
tspar =	1.0	1.0					Spar thickness
Spar Mat =	2124-T851	2124-T851					
Joint to Lower Skin					J-Ls	Units	Comments
Type =	HSTB411	HSTB411					
Dash No. =	5	5					
Dia =	4.0	4.0					
t =	1.7	1.7					Bracket flange thickness
tskin =	1.6	1.6					Skin thickness
Skin Mat =	2024-T3	2024-T3					Skin material

Table 6-22 Mid & OB hinge fittings geometry data for calculation file [12].

6.9 Appendix I Geometric Data for Calculation File [13]

Presented in this appendix is geometric data for:

- Calculation file 13 PC24_Aileron_Trim_Tab-01

Geometric data (and allowables) for each calculation file is input to the Excel workbook via a single worksheet.

- All geometric data is defined on worksheet: *Geometry.*
- All allowables data is defined on worksheet: *Allowables.*

Aileron Trim Tab Geometry Data for Calculation File [13]

	Trim Tab body Body						
Location	**Body**	**Hinge**	**Rods**				
Machined Trim Tab				Hash Key =	Tab	Units	Comments
Mat =	2124-T851						Part material
Plate Thk =	2.5					inch	Billet size
Plate Thk =	63.5					mm	Billet size
VV0405 =	3.0-4.0"						VV0405-02C: billet + 1 thickness class
Mid(Abasis) =	7						See Allowable sheet: A basis.
Mid(Bbasis) =	8						See Allowable sheet: B basis.
Control Arm Lugs				Hash Key =	ConArm	Units	Comments
D =	7.96					mm	Lug:Bore diameter
DPO =	4.80					mm	Lug:Pin outer diameter
t =	2.50					mm	Lug: Uniform thickness
e =	7.97					mm	Lug: Bore center to end radius length
R =	7.97					mm	Lug: End radius or Lug radius
W/2 =	7.97					mm	Lug: "W" Lug effective width
phi =	0.00					mm	Lug: Lug taper angle
Di,bh =	4.82					mm	Lug: Bush Inner Diameter
Do,bh =	7.96					mm	Lug: Bush Outer Diameter
Bush Mat =	15-5 PH H1025						Lug: Bush material
Bush Mid =	19						Lug: Bush mat Id see Allowables sheet
A =	68.7					mm2	Root section, area
Iyy =	4328.3					mm4	Root section, inertia (at centriod X axis aligned to long ec
Ixx =	35.8					mm4	Root section, inertia (at centriod X axis aligned to long ec
ymax =	1.25					mm	max y from centroid (for M(x)y/I)
xmax =	27.5					mm	max x from centroid (for M(y)x/I
Control Arm Lug Pins				Hash Key =	ConArmP	Units	Comments
Mat =			A286				Pin (bolt) material
Bar Thk =			<38.1			mm	Billet size
Mid =			16				See Allowable sheet: A basis. Note no basis given in ER-2
Dia. =			4.8			mm	Pin diameter
t1 =			2.5			mm	Pin analysis: PSM 5.3.11.4 fig 11
g1 =			3.0				Pin analysis: PSM 5.3.11.4 fig 11
t2 =			8.3				Pin analysis: PSM 5.3.11.4 fig 11
g2 =			3.0				Pin analysis: PSM 5.3.11.4 fig 11
t3 =			2.5				Pin analysis: PSM 5.3.11.4 fig 11
Piano Hinge				Hash Key =	Hin	Units	Comments
Mat =		7075-T73511					
Ext Thk =						inch	Assume manufactured from an extrudion
Ext Thk =		4.6				mm	Assume manufactured from an extrudion
Mid =		17					Id for Allowables sheet, B basis
t1 =		1.42				mm	Thickness of half hinge flange
e1 =		3.43				mm	"X" Tang root to pin centre (load)
e2 =		1.58				mm	"Z" Tang root to pin centre (load)
e3 =		15.2				mm	"X" Fastener line to pin centre (load)
z3 =		0.90				mm	"Z" Fastener line to pin centre (load)
L1 =		14.50				mm	Contact length between hinge & M/C body
Type		NAS1097					Half hinge to M/C body fastener type
Dash No.		4					Fastener dash no
Dia =		3.2					Fastener diameter
Pitchmax =		19.2				mm	Assume 6D
wt =		12.6				mm	Tang width
D =		2.36				mm	Tang:Bore diameter
DPO =		2.28				mm	Tang:Pin outer diameter
t =		6.30				mm	Tang: Effective width = 25% of tang width at each end
e =		2.29				mm	Tang: Bore center to end radius length
R =		2.29				mm	Tang: End radius or Lug radi If R >1.7*D, Ktb1 will go out
W/2 =		2.29				mm	Tang: "W" Lug effective width
phi =		0.00				deg	Tang: Lug taper angle
Di,bh =		2.28				mm	Tang: Bush Inner Diameter
Do,bh =		-				mm	Tang: Bush Outer Diameter
Bush Mat =		7075-T73511					Tang: Bush material
Bush Mid =		17					Tang: Bush mat Id, see Allowables sheet
Piano Hinge Pin				Hash Key =	HinP	Units	Comments
Mat =		17-7 PH cond C					Cold drawn wire
Ext Thk =						inch	Wire dia
Ext Thk =		4.5				mm	Wire dia
Mid =		18					Id for Allowables sheet, B basis
Dia =		2.28				mm	Pin dia

Table 6-23 Aileron trim tab, geometry data for calculation file [13].

6.10 Appendix J Geometric Data for Calculation File [14]

Presented in this appendix is geometric data for:

- Calculation file 14 PC24_Aileron_WBox-support_struc-01

Geometric data (and allowables) for each calculation file is input to the Excel workbook via a single worksheet.

- All geometric data is defined on worksheet: *Geometry.*
- All allowables data is defined on worksheet: *Allowables.*

Aileron Support Structure Geometry Data For Calculation File [14]

	Support hinges						
Location	**Inboard**	**Mid**	**Mid**	**Outboard**			
Machined Trim Tab					Brk	Units	Comments
Mat =	2124-T851	2124-T851	2124-T851	2124-T851			Part material
Plate Thk =	2.0	2.0	2.0	2.0		inch	Billet size
Plate Thk =	50.8	50.8	50.8	50.8		mm	Billet size
VV0405 =	2.0-3.0"	2.0-3.0"	2.0-3.0"	2.0-3.0"			VV0405-02C: billet + 1 thickness class
Mid(Abasis) =	N/A	N/A	N/A	N/A			See Allowable sheet: A basis.
Mid(Bbasis) =	6	6	6	6			See Allowable sheet: B basis.
Hinge Lug		Mid (In)	Mid (Out)		Lug	Units	Comments
D =	36.51	12.7	15.9	22.9		mm	Lug:Bore diameter
DPO =	9.53	9.50	9.50	6.3		mm	Lug:Pin outer diameter
t =	20.70	4.0	4.0	12.8		mm	Lug: Uniform thickness
e =	24.80	12.0	12.0	15.2		mm	Lug: Bore center to end radius length
R =	24.80	12.0	12.0	15.2		mm	Lug: End radius or Lug radius
W/2 =	24.80	12.0	12.0	15.2		mm	Lug: "W" Lug effective width
phi =	0.00	0.0	0.0	67.0		mm	Lug: Lug taper angle
Di,bh =	9.53	9.53	12.7	6.4		mm	Lug: Bush Inner Diameter
Do,bh =	36.51	12.7	15.9	22.9		mm	Lug: Bush Outer Diameter
Bush Mat =	N/A	Al-Bz	Al-Bz	N/A			Lug: Bush material - bush is a bearing
Bush Mid =	N/A	17	17	N/A			Lug: Bush mat Id see Allowables sheet
Hinge Pins					Pin	Units	Comments
Mat =	A-286	A-286	A-286	A-286			Pin (bolt) material
Bar Thk =	-	-	-	-		mm	Billet size
Mid =	16	16	16	16			See Allowable sheet: A basis. Note no basis given in ER-2
Dia. =	9.5	9.5	9.5	6.3		mm	Pin diameter
t1 =	5.3	4.0	4.0	2.5		mm	Pin analysis: PSM 5.3.11.4 fig 11 (Inboard)
g1 =	3.9	2.1	2.1	4.7		mm	Pin analysis: PSM 5.3.11.4 fig 11 (Inboard)
t2 =	20.7	11.6	11.6	12.8		mm	Pin analysis: PSM 5.3.11.4 fig 11
g2 =	2.3	1.7	1.7	5.7		mm	Pin analysis: PSM 5.3.11.4 fig 11 (Outboard)
t3 =	5.3	4.0	4.0	2.5		mm	Pin analysis: PSM 5.3.11.4 fig 11 (Outboard)
Section Details					Sec	Units	Comments
Uw =	46.5	42.4	N/A	42.6		mm	Width of upper flanges
Lw =	46.5	42.4	N/A	42.6		mm	Width of lower flanges
Utmin =	2.0	2.0	N/A	2.2		mm	Upper flange min thickness
Ltmin =	1.6	2.0	N/A	1.6		mm	Lower flange min thickness
Ww =	109.1	134.7	N/A	94.0		mm	Web width dimension
Wh =	99.6	100.9	N/A	59.7		mm	Web hieght dimension
Wt =	2.2	1.6	N/A	2.0		mm	Web thickness
Vt =	1.6	N/A	N/A	N/A		mm	Vertical flange min thickness
fillr =	2.5	2.5	N/A	2.5		mm	Fillet radii
Joint to Upper WB Skin					J-WBus	Units	Comments
Type =	HSTB411	HSTB411	N/A	MS20426AD			
Dash No. =	6	5	N/A	5.0			
Dia =	4.8	4.0	N/A	4.0			
t =	3.0	2.0	N/A	2.7			Bracket flange thickness
tskin =	2.5	2.5	N/A	2.0			WB Skin thickness
Joint to WB Rear Spar					J-WBsp	Units	Comments
Type =	MS20470AD	MS20470AD	N/A	CR3223			
Dash No. =	5	4	N/A	5			
Dia =	4.0	3.2	N/A	4.0			
t =	1.6	1.6	N/A	2.0			Bracket flange thickness
tspar =	1.5	1.1	N/A	1.3			WB Spar thickness
Joint to Lower WB Skin					J-WBls	Units	Comments
Type =	HSTB411	HSTB411	N/A	CR3224			
Dash No. =	6	5	N/A	5			
Dia =	4.8	4.0	N/A	4.0			
t =	1.7	2.0	N/A	2.0			Bracket flange thickness
tskin =	2.5	2.5	N/A	2.0			WB Skin thickness
Joint to Upper T/E Skin					J-TEus	Units	Comments
Type =	ES1756						
Dash No. =	-						
Dia =	4.8						
t =	2.0						Bracket flange thickness
tskin =	2.0						WB Skin thickness

Table 6-24 Aileron support structure, geometry data for calculation file [14].

6.11 Appendix K Aileron Box PESS Groups

At the root of the PESS rib analysis is a set of FEMAP groups defining panels and flanges (PESS stringers). The definition of these groups is given in this appendix.
The groups are organised into ranges associated with aileron parts (skins, ribs, spars etc.), these ranges are defined in Table 2-14.
Hint:
The FEMAP group id is NOT used by PESS; the PESS panel Id. is defined by the Id. given at the end of each group name.
The element list can be copy/pasted into a FEMAP dialog to recreate the groups.

PESS Id range rules = PPxxy = PP = Id for part
xx = rib or panel Id
y = y partial rib or sub-panel id (if applicable)

LE upper skin panels	PESS Id range 11xxy
LE lower skin panels	PESS Id range 21xxy
LE rib webs	PESS Id range 31xxy
Box upper skin panels	PESS Id range 12xxy
Box lower skin panels	PESS Id range 22xxy
Box Rib webs	PESS Id range 35xxy
Box Rib upper flanges	PESS Id range 36xxy
Box Rib lower flanges	PESS Id range 37xxy
Front Spar webs	PESS Id range 41xxy
Front Spar upper caps	PESS Id range 42xxy
Front Spar lower caps	PESS Id range 43xxy
Front Spar vertical stiffeners	PESS Id range 44xxy
Rear Spar webs	PESS Id range 45xxy
Rear Spar upper caps	PESS Id range 46xxy
Rear Spar lower caps	PESS Id range 47xxy
TE upper skin panels	PESS Id range 13xxy
TE lower skin panels	PESS Id range 23xxy

LE Upper Skin		
Rib Id	**Ribs: PESS Group Name**	**Element List**
1	Uskin_LE_PANEL_11010	2712507,2712515,1 2712526
2	Uskin_LE_PANEL_11020	2712516,2712517,1 2712519,2712522,1 2712527
3	Uskin_LE_PANEL_11030	2712529,2712535,1 2712537,2712545,1 2713237,2713240,1
4	Uskin_LE_PANEL_11040	2712549,2712580,1 2713210,2713217,1
5	Uskin_LE_PANEL_11050	2712581,2712600,1 2713218,2713222,1
6	Uskin_LE_PANEL_11060	2712601,2712628,1 2713223,2713229,1
7	Uskin_LE_PANEL_11070	2712629,2712632,1 2712634,2712637,1 2712639,2712646,1 2712651,2712652,1 2713230,2713234,1
8	Uskin_LE_PANEL_11080	2712655,2712657,1 2712659,2712662,1 2712664,2712666,1 2712669,2712671,1 2712673,2712675,1 2712677,2712678,1
9	Uskin_LE_PANEL_11090	2712679,2712706,1
10	Uskin_LE_PANEL_11100	2712707,2712734,1
11	Uskin_LE_PANEL_11110	2712735,2712762,1
12	Uskin_LE_PANEL_11120	2712763,2712766,1 2712768,2712771,1 2712773,2712776,1 2712778,2712781,1
13	Uskin_LE_PANEL_11130	2712784,2712788,1 2712790,2712794,1 2712796,2712800,1 2712802,2712806,1

Table 6-25 Definition of PESS groups: LE upper skin panels.

LE Lower Skin		
Rib Id	**Ribs: PESS Group Name**	**Element List**
1	Lskin_LE_PANEL_21010	2712504,2712505,1 2712807,2712810,1 2712814 2712816,2712817,1 2712820,2712821,1 2712827
2	Lskin_LE_PANEL_21020	2712506 2712811,2712813,1 2712815 2712818,2712819,1 2712822,2712824,1 2712826
3	Lskin_LE_PANEL_21030	2712829,2712836,1 2713236
4	Lskin_LE_PANEL_21040	2712841,2712864,1
5	Lskin_LE_PANEL_21050	2712873,2712887,1
6	Lskin_LE_PANEL_21060	2712893,2712913,1
7	Lskin_LE_PANEL_21070	2712921,2712924,1 2712926,2712933,1 2712940,2712944,1
8	Lskin_LE_PANEL_21080	2712946,2712957,1 2712964,2712969,1
9	Lskin_LE_PANEL_21090	2712971,2712991,1
10	Lskin_LE_PANEL_21100	2712999,2713019,1
11	Uskin_LE_PANEL_21110	2713027,2713047,1
12	Lskin_LE_PANEL_21120	2713055,2713058,1 2713060,2713063,1 2713065,2713068,1
13	Lskin_LE_PANEL_21130	2713076,2713080,1 2713082,2713086,1 2713088,2713092,1

Table 6-26 Definition of PESS groups: LE lower skin panels.

Box Ribs		
Rib Id	**Ribs: PESS Group Name**	**Element List**
1	RibUC_box_STRINGER_36010	2714257,2714259,1 2714264,2714267,1 2714272,2714273,1
	Rib_box_PANEL_35010	2714135,2714174,1
	RibLC_box_STRINGER_37010	2714261,2714263,1 2714268,2714271,1 2714274,2714275,1
1a	RibUC_box_STRINGER_36011	2714066,2714068,1 2714072,2714075,1 2714080,2714081,1
	Rib_box_PANEL_35011	2713803,2713842,1
	RibLC_box_STRINGER_37011	2714069,2714071,1 2714076,2714079,1 2714082,2714083,1
2	RibUC_box_STRINGER_36020	2713843,2713845,1 2713849,2713852,1 2713857,2713858,1
	Rib_box_PANEL_35020	
	RibLC_box_STRINGER_37020	2713846,2713848,1 2713853,2713856,1 2713859,2713860,1
2a	RibUC_box_STRINGER_36021	No upper rib cap
	Rib_box_PANEL_35021	2713241,2713269,1 2714106,2714109,1
	RibLC_box_STRINGER_37021	2714093,2714101,1
2b	RibUC_box_STRINGER_36022	No upper rib cap
	Rib_box_PANEL_35022	2713270,2713298,1 2714102,2714105,1
	RibLC_box_STRINGER_37022	2714084,2714092,1
3	RibUC_box_STRINGER_36030	2713861,2713863,1 2713867,2713870,1 2713875,2713876,1
	Rib_box_PANEL_35030	2713339,2713378,1
	RibLC_box_STRINGER_37030	2713864,2713866,1 2713871,2713874,1 2713877,2713878,1
4	RibUC_box_STRINGER_36040	2713879,2713881,1 2713885,2713888,1 2713893,2713894,1
	Rib_box_PANEL_35040	2713379,2713418,1
	RibLC_box_STRINGER_37040	2713882,2713884,1 2713889,2713892,1 2713895,2713896,1
5	RibUC_box_STRINGER_36050	2713897,2713899,1 2713903,2713906,1 2713911,2713914,1
	Rib_box_PANEL_35050	2713419,2713466,1
	RibLC_box_STRINGER_37050	2713900,2713902,1 2713907,2713910,1 2713915,2713918,1
6	RibUC_box_STRINGER_36060	2713919,2713921,1 2713925,2713928,1 2713933,2713935,1
	Rib_box_PANEL_35060	2713467,2713514,1
	RibLC_box_STRINGER_37060	2713922,2713924,1 2713929,2713932,1 2713936,2713939,1

Box Ribs continued from previous page		
7	RibUC_box_STRINGER_36070	2713940,2713942,1 2713946,2713949,1 2713954,2713956,1
	Rib_box_PANEL_35070	2713515,2713562,1
	RibLC_box_STRINGER_37070	2713943,2713945,1 2713950,2713953,1 2713957,2713960,1
8	RibUC_box_STRINGER_36080	2713961,2713963,1 2713967,2713970,1 2713975,2713977,1
	Rib_box_PANEL_35080	2713563,2713610,1
	RibLC_box_STRINGER_37080	2713964,2713966,1 2713971,2713974,1 2713978,2713981,1
9	RibUC_box_STRINGER_36090	2713982,2713984,1 2713988,2713991,1 2713996,2713998,1
	Rib_box_PANEL_35090	2713611,2713658,1
	RibLC_box_STRINGER_37090	2713985,2713987,1 2713992,2713995,1 2713999,2714002,1
10	RibUC_box_STRINGER_36100	2714003,2714005,1 2714009,2714012,1 2714017,2714019,1
	Rib_box_PANEL_35100	2713659,2713706,1
	RibLC_box_STRINGER_37100	2714006,2714008,1 2714013,2714016,1 2714020,2714023,1
11	RibUC_box_STRINGER_36110	2714024,2714026,1 2714030,2714033,1 2714038,2714040,1
	Rib_box_PANEL_35110	2713707,2713754,1
	RibLC_box_STRINGER_37110	2714027,2714029,1 2714034,2714037,1 2714041,2714044,1
12	RibUC_box_STRINGER_36120	2714045,2714047,1 2714051,2714054,1 2714059,2714061,1
	Rib_box_PANEL_35120	2713755,2713802,1
	RibLC_box_STRINGER_37120	2714048,2714050,1 2714055,2714058,1 2714062,2714065,1
13	RibUC_box_STRINGER_36131 RibUC_box_STRINGER_36131	2714284,2714287,1 2714292,2714293,1 2714294,2714297,1
	Rib_box_PANEL_35130	2714175,2714208,1 2714212,2714213,1 2714217,2714218,1 2714222,2714223,1
	RibLC_box_STRINGER_37131 RibLC_box_STRINGER_37131	2714288,2714291,1 2714299,2714300,1 2714298 2714301,2714303,1

Table 6-27 Definition of PESS groups: Aileron box ribs.

Bay Id	Front Spar: PESS Group Name	Element List
1	Fspar_UC_STRINGER_42010	2714592,2714593,1
	Fspar_web_PANEL_41010	2714507,2714508,1 2714512,2714513,1 2714517,2714518,1 2714522,2714527,1
	Fspar_LC_STRINGER_43010	2714596,2714598,1
2	Fspar_UC_STRINGER_42020	2714589,2714591,1 2714595
	Fspar_web_PANEL_41020	2714504,2714506,1 2714509,2714511,1 2714514,2714516,1 2714519,2714521,1
	Fspar_LC_STRINGER_43020	2714599,2714602,1
3a	Fspar_UC_STRINGER_42031	2714603 2714611
	Fspar_web_PANEL_41031	2714487,2714492,1 2714538 2714546 2714554 2714562 2714564,2714567,1
	Fspar_LC_STRINGER_43031	2714612 2714620
3b	Fspar_UC_STRINGER_42032	2714604,2714607,1 2714736
	Fspar_web_PANEL_41032	Cut out
	Fspar_LC_STRINGER_43032	2714613,2714616,1
3c	Fspar_UC_STRINGER_42033	2714608,2714610,1 2714740
	Fspar_web_PANEL_41033	2714493,2714494,1 2714532,2714534,1 2714540,2714544,1 2714548,2714550,1 2714552 2714556,2714558,1 2714571 2714733,2714734,1 2714738,2714739,1
	Fspar_LC_STRINGER_43033	2714617,2714619,1 2714737
4	Fspar_UC_STRINGER_42041	2714621,2714622,1
	Fspar_UC_STRINGER_42042	2715015,2715016,1
	Fspar_web_PANEL_41040	2714573,2714588,1 2714757,2714772,1
	Fspar_LC_STRINGER_43041	2714625,2714626,1
	Fspar_LC_STRINGER_43042	2715019,2715020,1
5	Fspar_UC_STRINGER_42050	2715021,2715025,1
	Fspar_web_PANEL_41050	2714773,2714792,1
	Fspar_LC_STRINGER_43050	2715026,2715030,1
6	Fspar_UC_STRINGER_42060	2715031,2715037,1
	Fspar_web_PANEL_41060	2714793,2714820,1
	Fspar_LC_STRINGER_43060	2715038,2715044,1
7	Fspar_UC_STRINGER_42070	2715045,2715051,1
	Fspar_web_PANEL_41070	2714821,2714848,1
	Fspar_LC_STRINGER_43070	2710006,2710007,1 2715052,2715056,1
8	Fspar_UC_STRINGER_42080	2710008 2715057,2715062,1
	Fspar_web_PANEL_41080	2714849,2714876,1
	Fspar_LC_STRINGER_43080	2710004,2710005,1 2715063,2715067,1
9	Fspar_UC_STRINGER_42090	2715068,2715074,1
	Fspar_web_PANEL_41090	2714877,2714904,1
	Fspar_LC_STRINGER_43090	2715075,2715081,1

Bay Id	Front Spar: PESS Group Name	Element List
Continued from previous page		
10	Fspar_UC_STRINGER_42100	2715082,2715088,1
	Fspar_web_PANEL_41100	2714905,2714932,1
	Fspar_LC_STRINGER_43100	2715089,2715095,1
11	Fspar_UC_STRINGER_42110	2715096,2715102,1
	Fspar_web_PANEL_41110	2714933,2714960,1
	Fspar_LC_STRINGER_43110	2715103,2715109,1
12	Fspar_UC_STRINGER_42120	2715110,2715115,1
	Fspar_web_PANEL_41120	2714961,2714984,1
	Fspar_LC_STRINGER_43120	2715116,2715121,1
13	Fspar_UC_STRINGER_42130	2715122,2715128,1
	Fspar_web_PANEL_41130	2714985,2715012,1
	Fspar_LC_STRINGER_43130	2715129,2715135,1

Table 6-28 Definition of PESS groups: Front spar webs.

Bay Id	Upper Skin: PESS Group Name	Element List
1	Uskin_LE_PANEL_11010	2712507,2712515,1 2712526
2	Uskin_LE_PANEL_11020	2712516,2712517,1 2712519,2712522,1 2712527
3	Uskin_LE_PANEL_11030	2712529,2712535,1 2712537,2712545,1 2713237,2713240,1
4	Uskin_LE_PANEL_11040	2712549,2712580,1 2713210,2713217,1
5	Uskin_LE_PANEL_11050	2712581,2712600,1 2713218,2713222,1
6	Uskin_LE_PANEL_11060	2712601,2712628,1 2713223,2713229,1
7	Uskin_LE_PANEL_11070	2712629,2712632,1 2712634,2712637,1 2712639,2712646,1 2712651,2712652,1 2713230,2713234,1
8	Uskin_LE_PANEL_11080	2712655,2712657,1 2712659,2712662,1 2712664,2712666,1 2712669,2712671,1 2712673,2712675,1 2712677,2712678,1
9	Uskin_LE_PANEL_11090	2712679,2712706,1
10	Uskin_LE_PANEL_11100	2712707,2712734,1
11	Uskin_LE_PANEL_11110	2712735,2712762,1
12	Uskin_LE_PANEL_11120	2712763,2712766,1 2712768,2712771,1 2712773,2712776,1 2712778,2712781,1
13	Uskin_LE_PANEL_11130	2712784,2712788,1 2712790,2712794,1 2712796,2712800,1 2712802,2712806,1

Table 6-29 Definition of PESS groups: Aileron box upper skin.

6.12 Appendix L Example Calculation of Neuber Correction of FEM Peak Stress

Static analysis reserve factors (both limit and ultimate) are typically based on net areas with smooth stress gradients. At stress concentration zones (exponential gradients) the associated local material volume is allowed to plastically deform. For ductile materials this has the effect of significantly reducing the peak stress.
Typically when linear FE methods are used for fittings etc. the FE stress results partially capture stress concentration effects. To provide a realistic static strength RF, the peak FE stress is corrected for plasticity. A systematic correction method for linear FE results for has been derived in Ref [18]. Where appropriate this has been applied all CTET10 FE models used in this report.

A typical worked example is given below:

Input Data

Material =	**2124-T851, Plate 50.81 - 76.20, B Basis**				
Ft_u =	**469**	MPa	$f_R=Ft_u$	469	MPa
Ft_y =	**421**	MPa	$f_R'=Ft_y$	421	MPa
ε_u=	**0.04**	mm/mm	$\varepsilon_R=\varepsilon_u-Ft_u/E$	3.35%	
E =	**71710**	MPa			
$\varepsilon_{0,2}$=	0.2%		$\varepsilon_R'=\varepsilon_{0,2}$	0.2%	
FEM_{peak} =	**700**	MPa	ε=FEM/E	0.98%	

Analysis
With reference to figure 1,ref. [18]. Reproduced below as Figure 6-8.

The FEM_{peak} stress is equivalent to σ_{linear}.
The "Kt" stress "σ", corrected for plasticity is the point at which the Neuber hyperbola intersects with the material stress strain curve.

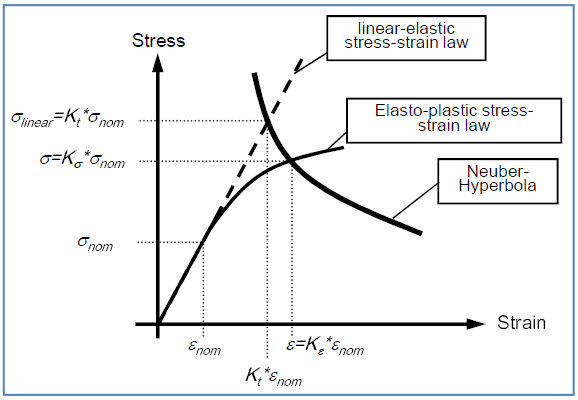

Figure 6-8 Neuber Hyperbola

The RF is then calculated as Ftu/σ

The intersect point is found in the following manner.
Step 1: Define the elastic-plastic stress strain curve.

From PSM 5.3.3.3 (ESDU 76016)

$$m = \frac{\log(\varepsilon_R/\varepsilon_R')}{\log(f_R/f_R')}$$ = log(0.0335/0.002)/log(469./421.) m = 26.09

$$f_n = f_R\left[\frac{m\varepsilon_R E}{f_R}\right]^{-1/(m-1)}$$ = 469*[26.09*0.002*71710/469]^(-1/(26.09-1)) f_n = 385.9 MPa

$$E_t = E\left[1 + \left[\frac{f}{f_n}\right]^{m-1}\right]^{-1}$$ column labelled 1 in Table 6-30

$$\frac{\varepsilon E}{f_n} = \frac{f}{f_n} + \frac{1}{m}\left[\frac{f}{f_n}\right]^m$$ column labelled 2 in Table 6-30

Step 2: Calculate Neuber corrected stress
The intersect point is found using an iterative/tabular approach (as described in ref [13] section 3.2).
For example at the linear peak stress of interest (700 MPa)

Linear strain ε_{lin} = $FEM_{peak\ stress}$/E = 700/71710. ε_{lin} = 0.009732 mm/mm

A table is then set up listing corresponding values of:

	Stress	$Strain_{elasis\text{-}plastic}$	Neuber constant (Stress * $Strain_{elastic\text{-}plastic}$)
See Table 6-30	Col 1	Col 2	Col 3

When the Neuber constant matches $\sigma_{lin\text{-}FE}*\varepsilon_{lin}$, the value of "Stress" is the Neuber corrected FEM_{stress}
From Table 6-30 this occurs when

Stress (σ)	= 445.6 MPa		
$Strain_{elas\text{-}plastic}$	= 0.01499 mm/mm	Neuber =	= 6.68
$\sigma_{lin\text{-}FE}*\varepsilon_{lin}$	= 700*0.009762		=6.68
RF_{Neu} = Ftu/σ	= 469/445.6	RF = 1.05	

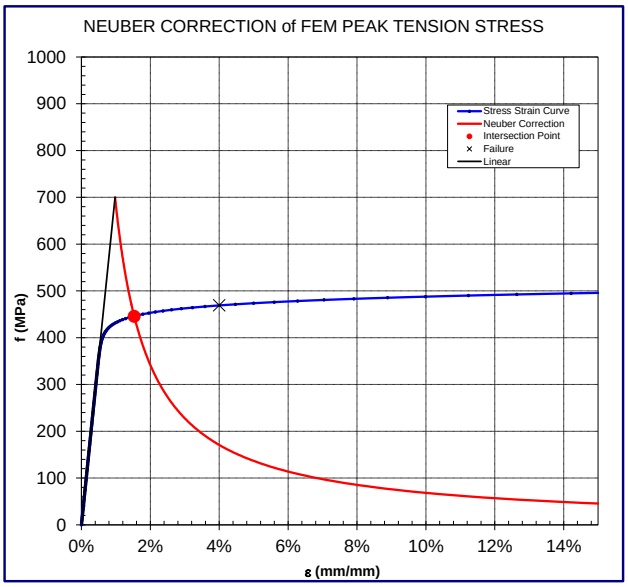

Figure 6-9 Neuber corrected FEM_{peak} stress

1 f	Et	2 $\varepsilon_{elas-plas}$	3 Neuber
0.00	71710	0	0.00
5.86	71710	8.17529E-05	0.00
11.73	71710	0.000163506	0.00
17.59	71710	0.000245259	0.00
23.45	71710	0.000327012	0.01
29.31	71710	0.000408764	0.01
35.18	71710	0.000490517	0.02
41.04	71710	0.00057227	0.02
46.90	71710	0.000654023	0.03
52.76	71710	0.000735776	0.04
58.63	71710	0.000817529	0.05
64.49	71710	0.000899282	0.06
70.35	71710	0.000981035	0.07
76.21	71710	0.001062788	0.08
82.08	71710	0.001144541	0.09
87.94	71710	0.001226293	0.11
93.80	71710	0.001308046	0.12
99.66	71710	0.001389799	0.14
105.53	71710	0.001471552	0.16
111.39	71710	0.001553305	0.17
117.25	71710	0.001635058	0.19
123.11	71710	0.001716811	0.21
128.98	71710	0.001798564	0.23
134.84	71710	0.001880317	0.25
140.70	71710	0.001962069	0.28
146.56	71710	0.002043822	0.30
152.43	71710	0.002125575	0.32
158.29	71710	0.002207328	0.35
164.15	71710	0.002289081	0.38
170.01	71710	0.002370834	0.40
175.88	71710	0.002452587	0.43
181.74	71710	0.00253434	0.46
187.60	71710	0.002616093	0.49
193.46	71710	0.002697845	0.52
199.33	71710	0.002779598	0.55
205.19	71710	0.002861351	0.59
211.05	71710	0.002943104	0.62
216.91	71710	0.003024857	0.66
222.78	71710	0.00310661	0.69
228.64	71710	0.003188363	0.73
234.50	71710	0.003270116	0.77
240.36	71710	0.00335187	0.81
246.23	71709	0.003433623	0.85
252.09	71708	0.003515378	0.89
257.95	71707	0.003597133	0.93
263.81	71705	0.00367889	0.97
269.68	71701	0.003760651	1.01
275.54	71695	0.003842417	1.06
281.40	71684	0.003924193	1.10
287.26	71666	0.004005985	1.15
293.13	71638	0.004087803	1.20
298.99	71591	0.004169662	1.25
304.85	71517	0.00425159	1.30
310.71	71399	0.004333626	1.35
316.58	71215	0.004415833	1.40
322.44	70928	0.004498308	1.45
328.30	70489	0.004581201	1.50
334.16	69824	0.004664738	1.56
340.03	68834	0.004749261	1.61
345.89	67386	0.004835282	1.67
351.75	65320	0.004923563	1.73
357.61	62460	0.005015232	1.79
363.48	58648	0.005111944	1.86
369.34	53806	0.005216115	1.93
375.20	47998	0.005331247	2.00
381.06	41476	0.005462394	2.08
386.93	34655	0.005616799	2.17
392.79	28019	0.005804793	2.28
398.65	21987	0.006041025	2.41
404.51	16825	0.006346166	2.57
410.38	12624	0.006749235	2.77
416.24	9336	0.007290768	3.03
422.10	6836	0.008027123	3.39
427.96	4975	0.009036294	3.87
433.83	3608	0.01042573	4.52
439.69	2614	0.012342814	5.43
445.55	1894	0.014988843	6.68
451.41	1375	0.018637613	8.41

Table 6-30 Corresponding values of stress, tangent modulus, strain and Neuber constant.

6.13 Appendix M LE balance mass, model mass verification.

The loading for the LE balance mass FEM [10] is uniquely inertia; for correct model loading the total mass (structural and non-structural) must comply with the actual assembly mass. Verification of the FEM mass is shown in Table 6-31.

Part Name	Part No.	BOM	Fem		Comments
		Kg	Mg	Kg	
LE IB Upper Skin	5576024425/-/	0.334	3.26E-04	0.326	2124-T851, density rounded up
LE OB Upper Skin	5576024427/-/	0.311	3.04E-04	0.304	2024-T3, density rounded up
LE IB Lower Skin	5576024431/B/	0.379	3.70E-04	0.370	Densimet, density rounded up
LE OB Lower Skin	5576024433/-/	0.339	3.32E-04	0.332	
IB hinge (incomplete)	5576024397/-/	0.068	6.75E-05	0.068	
Nose Rib 3	5576024363/-/	0.023			
Nose Rib 4	5576024365/-/	0.019	7.96E-05	0.080	
Nose Rib 5	5576024367/-/	0.023			
Nose Rib 6	5576024369/-/	0.017			
Mid Hinge fitting	5576024371/-/	0.176	0.00011	0.109	
Nose Rib 8	5576024373/-/	0.016			
Nose Rib 9	5576024375/-/	0.015	5.99E-05	0.060	
Nose Rib 10	5576024377/-/	0.014			
Nose Rib 11	5576024379/-/	0.013			
OB hinge fitting (incomplete)	5576024381/-/	0.033	3.00E-05	0.030	
Balance 1	5576024197/A/	3.165	0.00318	3.176	
Balance 2	5576024201/A/	3.447	0.00346	3.461	
Balance 3	5576024199/A/	1.759	0.00177	1.767	
Balance 4	5576024203/A/	1.479	0.00148	1.485	
Aux Balance type 1 (12 off)	5576024210/A/	1.320	0.00135	1.350	
Aux Balance type 2 (6 off)	5576024213/-/	0.216	0.00022	0.222	
IB attachment bolts (18 off)		0.126	0.00013	0.126	
Mid attachment bolts (12 off)		0.096	0.00010	0.096	
OB attachment bolts (13 off)		0.078	0.00008	0.078	
	Total	13.465		13.436	
				100%	% of BOM

Table 6-31 LE balance mass, model mass verification.

6.14 Appendix N Front Spar Splice in Bay Four, 2D bolt Group

2D Bolt Geometry and CG Positions

CG Location Calculation

Σ (Wy)	= 128. mm	Σ (Wx)	= 320. mm	XCG	= -23.7 mm
Σ (Wy)*X	= -3034 mm	Σ (Wx)*Y	= 10813. mm	YCG	= 33.8 mm
Σ (Wy)*X2	= 91864 mm²	Σ (Wx)*Y2	= 609976. mm2	I	= 264579. mm²

Row	Dia (mm)					
	1	2	3	4	5	6
1	4.0	4.0	4.0			
2	4.0	4.0	4.0			
3	4.0	4.0	4.0			
4	4.0	4.0	4.0		Symetric	
5	4.0	4.0	4.0			
6	4.0	4.0	4.0			
7	4.0	4.0	4.0			

Row	Efficiency Factors - Y direction load, ky					
	1	2	3	4	5	6
1	**0.00**	**0.00**	**0.00**			
2	**0.00**	**0.00**	**0.00**			
3	1.00	1.00	1.00			
4	**0.00**	1.00	1.00		Symetric	
5	1.00	1.00	1.00			
6	**0.00**	**0.00**	**0.00**			
7	**0.00**	**0.00**	**0.00**			

Row	Efficiency Factors - X direction load, kx					
	1	2	3	4	5	6
1	1.00	1.00	1.00			
2	1.00	1.00	1.00			
3	1.00	1.00	1.00			
4	**0.00**	1.00	1.00		Symetric	
5	1.00	1.00	1.00			
6	1.00	1.00	1.00			
7	1.00	1.00	1.00			

Row	Weighting Factor - Y direction load, Wy						
	1	2	3	4	5	6	Σ
1	**0.00**	**0.00**	**0.00**				0
2	**0.00**	**0.00**	**0.00**				0
3	16.00	16.00	16.00				48
4	**0.00**	16.00	16.00		Symetric		32
5	16.00	16.00	16.00				48
6	**0.00**	**0.00**	**0.00**				0
7	**0.00**	**0.00**	**0.00**				0

Row	Weighting Fator - X direction load, Wx						
	1	2	3	4	5	6	Σ
1	16.00	16.00	16.00				48
2	16.00	16.00	16.00				48
3	16.00	16.00	16.00				48
4	**0.00**	16.00	16.00		Symetric		32
5	16.00	16.00	16.00				48
6	16.00	16.00	16.00				48
7	16.00	16.00	16.00				48

Row	X (mm)					
	1	2	3	4	5	6
1	-41.7	-25.7	-9.7			
2	-41.7	-25.7	-9.7			
3	-41.7	-25.7	-9.7			
4	0.0	-25.7	-9.7		Symetric	
5	-41.7	-25.7	-9.7			
6	-41.7	-25.7	-9.7			
7	-41.7	-25.7	-9.7			

Row	Y (mm) from OML					
	1	2	3	4	5	6
1	66.40	66.40	66.40			
2	66.40	66.40	66.40			
3	52.30	52.30	52.30			
4	0.00	35.20	35.20		Symetric	
5	18.10	18.10	18.10			
6	-0.70	-0.70	-0.70			
7	-0.70	-0.70	-0.70			

Row	(Wy)*X						
	1	2	3	4	5	6	Σ
1	0	0	0				0
2	0	0	0				0
3	-667	-411	-155				-1234
4	0	-411	-155		Symetric		-566
5	-667	-411	-155				-1234
6	0	0	0				0
7	0	0	0				0

Row	(Wx)*Y						
	1	2	3	4	5	6	Σ
1	1062	1062	1062				3187
2	1062	1062	1062				3187
3	837	837	837				2510
4	0	563	563		Symetric		1126
5	290	290	290				869
6	-11	-11	-11				-34
7	-11	-11	-11				-34

Row	$(Wy)*x^2$						
	1	2	3	4	5	6	Σ
1	0	0	0				0
2	0	0	0				0
3	27822	10568	1505				39896
4	0	10568	1505		Symetric		12073
5	27822	10568	1505				39896
6	0	0	0				0
7	0	0	0				0

Row	$(Wx)*y^2$						
	1	2	3	4	5	6	Σ
1	70543	70543	70543				211630
2	70543	70543	70543				211630
3	43765	43765	43765				131294
4	0	19825	19825		Symetric		39649
5	5242	5242	5242				15725
6	8	8	8				24
7	8	8	8				24

Table 6-32 Front Spar splice details for 2D bolt group analysis

Fastener Forces for Load Case 2001

Row	Fastener Py from Applied Fy						
	1	2	3	4	5	6	Sum
1	0	0	0				0
2	0	0	0				0
3	-48	-48	-48				-144
4	0	-48	-48		Symetric		-96
5	-48	-48	-48				-144
6	0	0	0				0
7	0	0	0				0
						S =	-384

Row	Fastener Px from Applied Fx						
	1	2	3	4	5	6	Sum
1	22	22	22				67
2	22	22	22				67
3	22	22	22				67
4	0	22	22		Symetric		44
5	22	22	22				67
6	22	22	22				67
7	22	22	22				67
						S =	444

Row	Fastener Py from Applied Mz						
	1	2	3	4	5	6	Sum
1	0	0	0				0
2	0	0	0				0
3	-37	-4	29				-12
4	0	-4	29		Symetric		25
5	-37	-4	29				-12
6	0	0	0				0
7	0	0	0				0
						S =	0

Row	Fastener Px from Applied Mz						
	1	2	3	4	5	6	Sum
1	68	68	68				204
2	68	68	68				204
3	39	39	39				116
4	0	3	3		Symetric		6
5	-33	-33	-33				-98
6	-72	-72	-72				-215
7	-72	-72	-72				-215
						S =	0

Pres,i (N)							
Row	1	2	3	4	5	6	Max
1	90	90	90				90
2	90	90	90				90
3	105	80	64				105
4	0	58	31		Symetric		58
5	86	53	22				86
6	50	50	50				50
7	50	50	50				50

Table 6-33 Front Spar splice fastener forces for LC 3002

Fastener Forces for Load Case 3055

Row	Fastener Py from Applied Fy						
	1	2	3	4	5	6	Sum
1	0	0	0				0
2	0	0	0				0
3	-19	-19	-19				-57
4	0	-19	-19		Symetric		-38
5	-19	-19	-19				-57
6	0	0	0				0
7	0	0	0				0
						S =	-151

Row	Fastener Px from Applied Fx						
	1	2	3	4	5	6	Sum
1	-3	-3	-3				-8
2	-3	-3	-3				-8
3	-3	-3	-3				-8
4	0	-3	-3		Symetric		-5
5	-3	-3	-3				-8
6	-3	-3	-3				-8
7	-3	-3	-3				-8
						S =	-55

Row	Fastener Py from Applied Mz						
	1	2	3	4	5	6	Sum
1	0	0	0				0
2	0	0	0				0
3	-69	-8	53				-23
4	0	-8	53		Symetric		46
5	-69	-8	53				-23
6	0	0	0				0
7	0	0	0				0
						S =	0

Row	Fastener Px from Applied Mz						
	1	2	3	4	5	6	Sum
1	124	124	124				372
2	124	124	124				372
3	70	70	70				211
4	0	5	5		Symetric		11
5	-60	-60	-60				-179
6	-131	-131	-131				-394
7	-131	-131	-131				-394
						S =	0

Pres,i (N)							
Row	1	2	3	4	5	6	Max
1	121	121	121				121
2	121	121	121				121
3	111	73	76				111
4	0	27	35		Symetric		35
5	107	68	71				107
6	134	134	134				134
7	134	134	134				134

Table 6-34 Front Spar splice fastener forces for LC 3055

Fastener Forces for Load Case 5005

Row	Fastener Py from Applied Fy						
	1	2	3	4	5	6	Sum
1	0	0	0				0
2	0	0	0				0
3	-38	-38	-38				-114
4	0	-38	-38		Symetric		-76
5	-38	-38	-38				-114
6	0	0	0				0
7	0	0	0				0
						Σ =	-305

Row	Fastener Px from Applied Fx						
	1	2	3	4	5	6	Sum
1	25	25	25				76
2	25	25	25				76
3	25	25	25				76
4	0	25	25		Symetric		51
5	25	25	25				76
6	25	25	25				76
7	25	25	25				76
						Σ =	508

Row	Fastener Py from Applied Mz						
	1	2	3	4	5	6	Sum
1	0	0	0				0
2	0	0	0				0
3	21	2	-16				7
4	0	2	-16		Symetric		-14
5	21	2	-16				7
6	0	0	0				0
7	0	0	0				0
						Σ =	0

Row	Fastener Px from Applied Mz						
	1	2	3	4	5	6	Sum
1	-37	-37	-37				-112
2	-37	-37	-37				-112
3	-21	-21	-21				-64
4	0	-2	-2		Symetric		-3
5	18	18	18				54
6	40	40	40				119
7	40	40	40				119
						Σ =	0

Pres,i (N)							
Row	1	2	3	4	5	6	Max
1	12	12	12				12
2	12	12	12				12
3	18	36	54				54
4	0	43	59		Symetric		59
5	47	56	69				69
6	65	65	65				65
7	65	65	65				65

Table 6-35 Front Spar splice fastener forces for LC 5005

6.15 Appendix O Fastener Allowables for NAS 1921M

No data is presented in ref. [4] for NAS1921M blind rivets in aluminium sheet. Where this rivet sheet combination occurs the following equivalent fastener allowables have been used

Data for 2000 series aluminium sheet has been determined from factoring 7075 T6 data by the ratio or ultimate bearing allowables (e/d=2.0).

Assume equivalent to CR4523*
NAS1919M Protruding Hd
2024-T42

t	Dash Number and Dia (mm)		
	4	5	6
mm	3.20	4.00	4.80
1.00	1732	2123	-
1.20	2041	2507	-
1.30	2196	2699	-
1.60	2557	3447	-
1.70	2608	3647	-
1.80	2659	3848	-
2.00	Shear Crt	3994	-
2.30	Shear Crt	4158	
3.00	Shear Crt	Shear Crt	
Shear	2880	4430	6340
Tension			
$[S+T]_{brg\ crit}$			
$[S+T]_{shear\ crit}$			
KDF_{ten}	0.2	0.2	0.2

Ref. MMPDS-04 table 8.1.3.1.2 (h)
Estimated Data
lad 7075 T6 Fbru(2.0) = 1034 MPa
2024 T42 Fbru(2.0) = 848 MPa
Bearing ult ratio 0.820

Shear allow from PESS
(different to MMPDS)
*Conservative
CR4523: Fsu = 65 ksi
NAS1919M: Fsu = 75 ksi
Shear allow from PESS
(different to MMPDS)

Assume equivalent to CR4523*
NAS1919M Protruding Hd
2024-T3

t	Dash Number and Dia (mm)		
	4	5	6
mm	3.20	4.00	4.80
1.00	1838	2252	-
1.20	2166	2660	-
1.30	2330	2864	-
1.60	2713	3657	-
1.70	2767	3870	-
1.80	2821	4083	-
2.00	Shear Crt	4237	-
2.30	Shear Crt	4412	
3.00	Shear Crt	Shear Crt	
Shear	2880	4430	6340
Tension			
$[S+T]_{brg\ crit}$			
$[S+T]_{shear\ crit}$			
KDF_{ten}	0.2	0.2	0.2

Ref. MMPDS-04 table 8.1.3.1.2 (h)
Estimated Data
Clad 7075 T6 Fbru(2.0) = 1034 MPa
2024 T3 Fbru(2.0) = 903 MPa
Bearing ult ratio 0.870

Shear allow from PESS
(different to MMPDS)
*Conservative
CR4523: Fsu = 65 ksi
NAS1919M: Fsu = 75 ksi
Shear allow from PESS
(different to MMPDS)

Assume equivalent to CR4523*
NAS1919M Protruding Hd
2124-T851

t	Dash Number and Dia (mm)		
	4	5	6
mm	3.20	4.00	4.80
1.00	1817	2226	-
1.20	2141	2629	-
1.30	2303	2831	-
1.60	2682	3615	-
1.70	2735	3825	-
1.80	2789	4036	-
2.00	Shear Crt	4189	-
	Shear Crt	4361	
	Shear Crt	Shear Crt	
Shear	2880	4430	6340
Tension			
$[S+T]_{brg\ crit}$			
$[S+T]_{shear\ crit}$			
KDF_{ten}	0.2	0.2	0.2

Ref. MMPDS-04 table 8.1.3.1.2 (h)
Estimated Data
Clad 7075 T6 Fbru(2.0) = 1034 MPa
2124 T851 Fbru(2.0) = 896 MPa
Bearing ult ratio 0.860

Shear allow from PESS
(different to MMPDS)
*Conservative
CR4523: Fsu = 65 ksi
NAS1919M: Fsu = 75 ksi
Shear allow from PESS
(different to MMPDS)

Table 6-36 NAS1919M fasteners in 2000 series aluminium sheet.