NCFM

NSE's CERTIFICATION IN FINANCIAL MARKETS

Derivatives Market (Dealers) Module
Work Book

NATIONAL STOCK EXCHANGE OF INDIA LIMITED

Contents

1 Introduction to derivatives **5**
1.1 Derivatives defined . . . 5
1.2 Factors driving the growth of derivatives . . . 6
1.3 Derivative products . . . 6
1.4 Participants in the derivatives markets . . . 7
1.5 Economic function of the derivative market . . . 7
1.6 Exchange-traded vs. OTC derivatives markets . . . 9
1.7 NSE's derivatives market . . . 10
1.7.1 Participants and functions . . . 10
1.7.2 Trading mechanism . . . 11
1.7.3 Turnover . . . 11

2 Market index **13**
2.1 Understanding the index number . . . 13
2.2 Economic significance of index movements . . . 14
2.3 Index construction issues . . . 14
2.4 Types of indexes . . . 14
2.5 Desirable attributes of an index . . . 15
2.5.1 Capturing behavior of portfolios . . . 16
2.5.2 Including liquid stocks . . . 16
2.5.3 Maintaining professionally . . . 16
2.6 The S&P CNX Nifty . . . 16
2.6.1 Impact cost . . . 17
2.6.2 Hedging effectiveness . . . 17
2.7 Applications of index . . . 18
2.7.1 Index derivatives . . . 18
2.7.2 Index funds . . . 18
2.7.3 Exchange Traded Funds . . . 18

3 Introduction to futures and options **21**
3.1 Forward contracts . . . 21
3.2 Limitations of forward markets . . . 22
3.3 Introduction to futures . . . 22

3.4 Distinction between futures and forwards contracts . . . 23
3.5 Futures terminology . . . 23
3.6 Introduction to options . . . 24
3.7 Option terminology . . . 24
3.8 Futures and options . . . 26
3.9 Index derivatives . . . 27

4 Applications of futures and options 31
4.1 Trading underlying versus trading single stock futures . . . 31
4.2 Futures payoffs . . . 32
4.2.1 Payoff for buyer of futures: Long futures . . . 32
4.2.2 Payoff for seller of futures: Short futures . . . 33
4.3 Pricing futures . . . 33
4.4 Application of futures . . . 34
4.4.1 Hedging: Long security, sell futures . . . 34
4.4.2 Speculation: Bullish security, buy futures . . . 35
4.4.3 Speculation: Bearish security, sell futures . . . 35
4.4.4 Arbitrage: Overpriced futures: buy spot, sell futures . . . 36
4.4.5 Arbitrage: Underpriced futures: buy futures, sell spot . . . 36
4.5 Options payoffs . . . 37
4.5.1 Payoff profile of buyer of asset: Long asset . . . 37
4.5.2 Payoff profile for seller of asset: Short asset . . . 37
4.5.3 Payoff profile for buyer of call options: Long call . . . 37
4.5.4 Payoff profile for writer of call options: Short call . . . 39
4.5.5 Payoff profile for buyer of put options: Long put . . . 40
4.5.6 Payoff profile for writer of put options: Short put . . . 40
4.6 Pricing options . . . 41
4.7 Application of options . . . 43
4.7.1 Hedging: Have underlying buy puts . . . 43
4.7.2 Speculation: Bullish security, buy calls or sell puts . . . 43
4.7.3 Speculation: Bearish security, sell calls or buy puts . . . 45

5 Trading 53
5.1 Futures and options trading system . . . 53
5.1.1 Entities in the trading system . . . 53
5.1.2 Basis of trading . . . 54
5.1.3 Corporate hierarchy . . . 55
5.1.4 Client broker relationship in derivative segment . . . 56
5.1.5 Order types and conditions . . . 56
5.2 The trader workstation . . . 58
5.2.1 The market watch window . . . 58
5.2.2 Inquiry window . . . 59
5.2.3 Placing orders on the trading system . . . 59

5.2.4 Market spread/combination order entry . . . 59
5.2.5 Basket trading . . . 60
5.3 Futures and options market instruments . . . 60
5.3.1 Contract specifications for index futures . . . 61
5.3.2 Contract specification for index options . . . 62
5.3.3 Contract specifications for stock futures . . . 66
5.3.4 Contract specifications for stock options . . . 67
5.4 Criteria for stocks and index eligibility for trading . . . 68
5.4.1 Eligibility criteria of stocks . . . 68
5.4.2 Eligibility criteria of indices . . . 69
5.5 Charges . . . 69

6 Clearing and settlement 73
6.1 Clearing entities . . . 73
6.1.1 Clearing members . . . 73
6.1.2 Clearing banks . . . 73
6.2 Clearing mechanism . . . 74
6.3 Settlement mechanism . . . 75
6.3.1 Settlement of futures contracts . . . 76
6.3.2 Settlement of options contracts . . . 78
6.4 Risk management . . . 81
6.4.1 NSCCL–SPAN . . . 82
6.4.2 Types of margins . . . 82
6.5 Adjustments for corporate actions . . . 83

7 Regulatory framework 89
7.1 Regulation for derivatives trading . . . 89
7.2 Forms of collaterals acceptable at NSCCL . . . 90
7.3 Requirements to become F&O segment member . . . 90
7.4 Requirements to become authorised/approved user . . . 91
7.5 Position limits . . . 92
7.5.1 Trading member position limits . . . 92
7.5.2 Client level position limits . . . 92
7.5.3 Market wide position limits . . . 92
7.5.4 FII and sub–account position limits . . . 93
7.5.5 Position limits for mutual funds . . . 94
7.6 Reporting of client margin . . . 95
7.7 Accounting for futures . . . 95
7.7.1 Accounting at the inception of a contract . . . 96
7.7.2 Accounting at the time of daily settlement . . . 97
7.7.3 Accounting for open positions . . . 97
7.7.4 Accounting at the time of final settlement . . . 97
7.7.5 Accounting in case of a default . . . 98

7.7.6 Disclosure requirements 98
7.8 Accounting for equity index options and equity stock options 98
7.8.1 Accounting at the inception of a contract 99
7.8.2 Accounting at the time of payment/receipt of margin 99
7.8.3 Accounting for open positions as on balance sheet dates 99
7.8.4 Accounting at the time of final settlement 100
7.8.5 Accounting at the time of squaring off an option contract 100
7.9 Taxation of derivatives transaction in securities 101
7.9.1 Securities transaction tax on derivatives transactions 101
7.9.2 Taxation of Profit / Loss on derivative transaction in securities 101

Distribution of weights in the Derivatives Market (Dealers) Module Curriculum

Chapter No.	Title	Weights (%)
1	Introduction to derivatives	7
2	Market Index	8
3	Introduction to futures and options	10
4	Application of Futures & Options	10
5	Trading	25
6	Clearing and Settlement	25
7	Regulatory framework	15

Chapter 1

Introduction to derivatives

The emergence of the market for derivative products, most notably forwards, futures and options, can be traced back to the willingness of risk-averse economic agents to guard themselves against uncertainties arising out of fluctuations in asset prices. By their very nature, the financial markets are marked by a very high degree of volatility. Through the use of derivative products, it is possible to partially or fully transfer price risks by locking–in asset prices. As instruments of risk management, these generally do not influence the fluctuations in the underlying asset prices. However, by locking-in asset prices, derivative products minimize the impact of fluctuations in asset prices on the profitability and cash flow situation of risk-averse investors.

1.1 Derivatives defined

Derivative is a product whose value is derived from the value of one or more basic variables, called bases (underlying asset, index, or reference rate), in a contractual manner. The underlying asset can be equity, forex, commodity or any other asset. For example, wheat farmers may wish to sell their harvest at a future date to eliminate the risk of a change in prices by that date. Such a transaction is an example of a derivative. The price of this derivative is driven by the spot price of wheat which is the "underlying".

In the Indian context the Securities Contracts (Regulation) Act, 1956 (SC(R)A) defines "derivative" to include –

1. A security derived from a debt instrument, share, loan whether secured or unsecured, risk instrument or contract for differences or any other form of security.

2. A contract which derives its value from the prices, or index of prices, of underlying securities.

Derivatives are securities under the SC(R)A and hence the trading of derivatives is governed by the regulatory framework under the SC(R)A.

Derivative products initially emerged as hedging devices against fluctuations in commodity prices, and commodity-linked derivatives remained the sole form of such products for almost three hundred years. Financial derivatives came into spotlight in the post-1970 period due to growing instability in the financial markets. However, since their emergence, these products have become very popular and by 1990s, they accounted for about two-thirds of total transactions in derivative products. In recent years, the market for financial derivatives has grown tremendously in terms of variety of instruments available, their complexity and also turnover. In the class of equity derivatives the world over, futures and options on stock indices have gained more popularity than on individual stocks, especially among institutional investors, who are major users of index-linked derivatives. Even small investors find these useful due to high correlation of the popular indexes with various portfolios and ease of use.

Box 1.1: Emergence of financial derivative products

1.2 Factors driving the growth of derivatives

Over the last three decades, the derivatives market has seen a phenomenal growth. A large variety of derivative contracts have been launched at exchanges across the world. Some of the factors driving the growth of financial derivatives are:

1. Increased volatility in asset prices in financial markets,
2. Increased integration of national financial markets with the international markets,
3. Marked improvement in communication facilities and sharp decline in their costs,
4. Development of more sophisticated risk management tools, providing economic agents a wider choice of risk management strategies, and
5. Innovations in the derivatives markets, which optimally combine the risks and returns over a large number of financial assets leading to higher returns, reduced risk as well as transactions costs as compared to individual financial assets.

1.3 Derivative products

Derivative contracts have several variants. The most common variants are forwards, futures, options and swaps. We take a brief look at various derivatives contracts that have come to be used.

Forwards: A forward contract is a customized contract between two entities, where settlement takes place on a specific date in the future at today's pre-agreed price.

Futures: A futures contract is an agreement between two parties to buy or sell an asset at a certain time in the future at a certain price. Futures contracts are special types of forward contracts in the sense that the former are standardized exchange-traded contracts.

Options: Options are of two types - calls and puts. Calls give the buyer the right but not the obligation to buy a given quantity of the underlying asset, at a given price on or before a given future date. Puts give the buyer the right, but not the obligation to sell a given quantity of the underlying asset at a given price on or before a given date.

Warrants: Options generally have lives of upto one year, the majority of options traded on options exchanges having a maximum maturity of nine months. Longer-dated options are called warrants and are generally traded over-the-counter.

LEAPS: The acronym LEAPS means Long-Term Equity Anticipation Securities. These are options having a maturity of upto three years.

Baskets: Basket options are options on portfolios of underlying assets. The underlying asset is usually a moving average of a basket of assets. Equity index options are a form of basket options.

Swaps: Swaps are private agreements between two parties to exchange cash flows in the future according to a prearranged formula. They can be regarded as portfolios of forward contracts. The two commonly used swaps are :

- *Interest rate swaps*: These entail swapping only the interest related cash flows between the parties in the same currency.
- *Currency swaps*: These entail swapping both principal and interest between the parties, with the cashflows in one direction being in a different currency than those in the opposite direction.

Swaptions: Swaptions are options to buy or sell a swap that will become operative at the expiry of the options. Thus a swaption is an option on a forward swap. Rather than have calls and puts, the swaptions market has receiver swaptions and payer swaptions. A receiver swaption is an option to receive fixed and pay floating. A payer swaption is an option to pay fixed and receive floating.

1.4 Participants in the derivatives markets

The following three broad categories of participants - hedgers, speculators, and arbitrageurs trade in the derivatives market. Hedgers face risk associated with the price of an asset. They use futures or options markets to reduce or eliminate this risk. Speculators wish to bet on future movements in the price of an asset. Futures and options contracts can give them an extra leverage; that is, they can increase both the potential gains and potential losses in a speculative venture. Arbitrageurs are in business to take advantage of a discrepancy between prices in two different markets. If, for example, they see the futures price of an asset getting out of line with the cash price, they will take offsetting positions in the two markets to lock in a profit.

1.5 Economic function of the derivative market

Inspite of the fear and criticism with which the derivative markets are commonly looked at, these markets perform a number of economic functions.

Early forward contracts in the US addressed merchants' concerns about ensuring that there were buyers and sellers for commodities. However "credit risk" remained a serious problem. To deal with this problem, a group of Chicago businessmen formed the **Chicago Board of Trade** (CBOT) in 1848. The primary intention of the CBOT was to provide a centralized location known in advance for buyers and sellers to negotiate forward contracts. In 1865, the CBOT went one step further and listed the first "exchange traded" derivatives contract in the US, these contracts were called "futures contracts". In 1919, Chicago Butter and Egg Board, a spin-off of CBOT, was reorganized to allow futures trading. Its name was changed to **Chicago Mercantile Exchange** (CME). The CBOT and the CME remain the two largest organized futures exchanges, indeed the two largest "financial" exchanges of any kind in the world today.
The first stock index futures contract was traded at **Kansas City Board of Trade**. Currently the most popular stock index futures contract in the world is based on S&P 500 index, traded on Chicago Mercantile Exchange. During the mid eighties, financial futures became the most active derivative instruments generating volumes many times more than the commodity futures. Index futures, futures on T-bills and Euro-Dollar futures are the three most popular futures contracts traded today. Other popular international exchanges that trade derivatives are LIFFE in England, DTB in Germany, SGX in Singapore, TIFFE in Japan, MATIF in France, Eurex etc.

Box 1.2: History of derivatives markets

1. Prices in an organized derivatives market reflect the perception of market participants about the future and lead the prices of underlying to the perceived future level. The prices of derivatives converge with the prices of the underlying at the expiration of the derivative contract. Thus derivatives help in discovery of future as well as current prices.

2. The derivatives market helps to transfer risks from those who have them but may not like them to those who have an appetite for them.

3. Derivatives, due to their inherent nature, are linked to the underlying cash markets. With the introduction of derivatives, the underlying market witnesses higher trading volumes because of participation by more players who would not otherwise participate for lack of an arrangement to transfer risk.

4. Speculative trades shift to a more controlled environment of derivatives market. In the absence of an organized derivatives market, speculators trade in the underlying cash markets. Margining, monitoring and surveillance of the activities of various participants become extremely difficult in these kind of mixed markets.

5. An important incidental benefit that flows from derivatives trading is that it acts as a catalyst for new entrepreneurial activity. The derivatives have a history of attracting many bright, creative, well-educated people with an entrepreneurial attitude. They often energize others to create new businesses, new products and new employment opportunities, the benefit of which are immense.

In a nut shell, derivatives markets help increase savings and investment in the long run. Transfer of risk enables market participants to expand their volume of activity.

1.6 Exchange-traded vs. OTC derivatives markets

Derivatives have probably been around for as long as people have been trading with one another. Forward contracting dates back at least to the 12th century, and may well have been around before then. Merchants entered into contracts with one another for future delivery of specified amount of commodities at specified price. A primary motivation for pre-arranging a buyer or seller for a stock of commodities in early forward contracts was to lessen the possibility that large swings would inhibit marketing the commodity after a harvest.

As the word suggests, derivatives that trade on an exchange are called exchange traded derivatives, whereas privately negotiated derivative contracts are called OTC contracts.

The OTC derivatives markets have witnessed rather sharp growth over the last few years, which has accompanied the modernization of commercial and investment banking and globalisation of financial activities. The recent developments in information technology have contributed to a great extent to these developments. While both exchange-traded and OTC derivative contracts offer many benefits, the former have rigid structures compared to the latter. It has been widely discussed that the highly leveraged institutions and their OTC derivative positions were the main cause of turbulence in financial markets in 1998. These episodes of turbulence revealed the risks posed to market stability originating in features of OTC derivative instruments and markets.

The OTC derivatives markets have the following features compared to exchange-traded derivatives:

1. The management of counter-party (credit) risk is decentralized and located within individual institutions,
2. There are no formal centralized limits on individual positions, leverage, or margining,
3. There are no formal rules for risk and burden-sharing,
4. There are no formal rules or mechanisms for ensuring market stability and integrity, and for safeguarding the collective interests of market participants, and
5. The OTC contracts are generally not regulated by a regulatory authority and the exchange's self-regulatory organization, although they are affected indirectly by national legal systems, banking supervision and market surveillance.

Some of the features of OTC derivatives markets embody risks to financial market stability. The following features of OTC derivatives markets can give rise to instability in institutions, markets, and the international financial system: (i) the dynamic nature of gross credit exposures; (ii) information asymmetries; (iii) the effects of OTC derivative activities on available aggregate credit; (iv) the high concentration of OTC derivative activities in major institutions; and (v) the central role of OTC derivatives markets in the global financial system. Instability arises when shocks, such as counter-party credit events and sharp movements in asset prices that underlie derivative contracts occur, which significantly alter the perceptions of current and potential future credit exposures. When asset prices change rapidly, the size and configuration of counter-party exposures can become unsustainably large and provoke a rapid unwinding of positions.

There has been some progress in addressing these risks and perceptions. However, the progress has been limited in implementing reforms in risk management, including counterparty, liquidity and operational risks, and OTC derivatives markets continue to pose a threat to international financial stability. The problem is more acute as heavy reliance on OTC derivatives creates the possibility of systemic financial events, which fall outside the more formal clearing house structures. Moreover, those who provide OTC derivative products, hedge their risks through the use of exchange traded derivatives. In view of the inherent risks associated with OTC derivatives, and their dependence on exchange traded derivatives, Indian law considers them illegal.

1.7 NSE's derivatives market

The derivatives trading on the NSE commenced with S&P CNX Nifty Index futures on June 12, 2000. The trading in index options commenced on June 4, 2001 and trading in options on individual securities commenced on July 2, 2001. Single stock futures were launched on November 9, 2001. Today, both in terms of volume and turnover, NSE is the largest derivatives exchange in India. Currently, the derivatives contracts have a maximum of 3-month expiration cycles. Three contracts are available for trading, with 1 month, 2 months and 3 months expiry. A new contract is introduced on the next trading day following the expiry of the near month contract.

1.7.1 Participants and functions

NSE admits members on its derivatives segment in accordance with the rules and regulations of the exchange and the norms specified by SEBI. NSE follows 2–tier membership structure stipulated by SEBI to enable wider participation. Those interested in taking membership on F&O segment are required to take membership of CM and F&O segment or CM, WDM and F&O segment. Trading and clearing members are admitted separately. Essentially, a clearing member(CM) does clearing for all his trading members(TMs), undertakes risk management and performs actual settlement. There are three types of CMs:

- *Self Clearing Member:* A SCM clears and settles trades executed by him only either on his own account or on account of his clients.
- *Trading Member Clearing Member:* TM–CM is a CM who is also a TM. TM–CM may clear and settle his own proprietary trades and client's trades as well as clear and settle for other TMs.
- *Professional Clearing Member* PCM is a CM who is not a TM. Typically, banks or custodians could become a PCM and clear and settle for TMs.

Details of the eligibility criteria for membership on the F&O segment are provided in Tables 12.1 and 12.2(Chapter 12). The TM–CM and the PCM are required to bring in additional security deposit in respect of every TM whose trades they undertake to clear and settle. Besides this, trading members are required to have qualified users and sales persons, who have passed a certification programme approved by SEBI.

Table 1.1 Business growth of futures and options market: Turnover (Rs.crore)

Month	Index futures	Index options	Stock options	Stock futures
Jun-00	35	-	-	-
Jun-01	590	195	-	-
Jun-02	2,123	389	4,642	16,178
Jun-03	9,348	1,942	15,042	46,505
Jun-04	64,017	8,473	7,424	78,392
Jun-05	77,218	16,133	14,799	163,096

1.7.2 Trading mechanism

The futures and options trading system of NSE, called NEAT-F&O trading system, provides a fully automated screen–based trading for Nifty futures & options and stock futures & options on a nationwide basis and an online monitoring and surveillance mechanism. It supports an anonymous order driven market which provides complete transparency of trading operations and operates on strict price–time priority. It is similar to that of trading of equities in the Cash Market(CM) segment. The NEAT-F&O trading system is accessed by two types of users. The Trading Members(TM) have access to functions such as order entry, order matching, order and trade management. It provides tremendous flexibility to users in terms of kinds of orders that can be placed on the system. Various conditions like Immediate or Cancel, Limit/Market price, Stop loss, etc. can be built into an order. The Clearing Members(CM) use the trader workstation for the purpose of monitoring the trading member(s) for whom they clear the trades. Additionally, they can enter and set limits to positions, which a trading member can take.

1.7.3 Turnover

The trading volumes on NSE's derivatives market has seen a steady increase since the launch of the first derivatives contract, i.e. index futures in June 2000. Table 1.1 gives the value of contracts traded on the NSE. The average daily turnover at NSE now exceeds Rs.10000 crore. A total of 77,017,185 contracts with a total turnover of Rs.2,547,053 crore were traded during 2004-2005.

Solved Problems

Q: Futures trading commenced fi rst on

1. Chicago Board of Trade
2. Chicago Mercantile Exchange
3. Chicago Board Options Exchange
4. London International Financial Futures and Options Exchange

A: The correct answer is number 1. ••

Q: The underlying asset for a derivative contract can be

1. Equity
2. Commodities
3. Interest rate
4. Any of the above

A: The correct answer is number 4 ●●

Q: Derivatives fi rst emerged as _____ products

1. Speculative
2. Hedging
3. Volatility
4. Risky

A: The correct answer is number 2. ●●

Q: Who are the participants in the derivatives market?

1. Hedgers
2. Speculators
3. Arbitrageurs
4. All of the above

A: The correct answer is number 4. ●●

Q: The fi rst exchange traded fi nancial derivative in India commenced with the trading of_____

1. Index futures
2. Index options
3. Stock options
4. Interest rate futures

A: The correct answer is number 1. ●●

Q: OTC derivatives are considered risky because

1. There is no formal margining system.
2. They do not follow any formal rules or mechanisms.
3. They are not settled on a clearing house.
4. All of the above

A: The correct answer is number 4. ●●

Q: Which of the following is not an example of a derivative on security derivative?

1. Index futures
2. Index options
3. Stock futures
4. Interest rate futures

A: The correct answer is number 4. ●●

Chapter 2

Market index

To understand the use and functioning of the index derivatives markets, it is necessary to understand the underlying index. In the following section, we take a look at index related issues. Traditionally, indexes have been used as information sources. By looking at an index, we know how the market is faring. In recent years, indexes have come to the forefront owing to direct applications in finance in the form of index funds and index derivatives. Index derivatives allow people to cheaply alter their risk exposure to an index (hedging) and to implement forecasts about index movements (speculation). Hedging using index derivatives has become a central part of risk management in the modern economy.

2.1 Understanding the index number

An index is a number which measures the change in a set of values over a period of time. A stock index represents the change in value of a set of stocks which constitute the index. More specifically, a stock index number is the current relative value of a weighted average of the prices of a pre-defined group of equities. It is a relative value because it is expressed relative to the weighted average of prices at some arbitrarily chosen starting date or base period. The starting value or base of the index is usually set to a number such as 100 or 1000. For example, the base value of the Nifty was set to 1000 on the start date of November 3, 1995.

A good stock market index is one which captures the behavior of the overall equity market. It should represent the market, it should be well diversified and yet highly liquid. Movements of the index should represent the returns obtained by "typical" portfolios in the country.

A market index is very important for its use

1. as a barometer for market behavior,
2. as a benchmark portfolio performance,
3. as an underlying in derivative instruments like index futures, and
4. in passive fund management by index funds

2.2 Economic significance of index movements

How do we interpret index movements? What do these movements mean? They reflect the changing expectations of the stock market about future dividends of the corporate sector. The index goes up if the stock market thinks that the prospective dividends in the future will be better than previously thought. When the prospects of dividends in the future becomes pessimistic, the index drops. The ideal index gives us instant readings about how the stock market perceives the future of corporate sector.

Every stock price moves for two possible reasons:

1. News about the company (e.g. a product launch, or the closure of a factory)
2. News about the country (e.g. budget announcements)

The job of an index is to purely capture the second part, the movements of the stock market as a whole (i.e. news about the country). This is achieved by averaging. Each stock contains a mixture of two elements - stock news and index news. When we take an average of returns on many stocks, the individual stock news tends to cancel out and the only thing left is news that is common to all stocks. The news that is common to all stocks is news about the economy. That is what a good index captures. The correct method of averaging is that of taking a weighted average, giving each stock a weight proportional to its market capitalization.

Example: Suppose an index contains two stocks, A and B. A has a market capitalization of Rs.1000 crore and B has a market capitalization of Rs.3000 crore. Then we attach a weight of 1/4 to movements in A and 3/4 to movements in B.

2.3 Index construction issues

A good index is a trade-off between diversification and liquidity. A well diversified index is more representative of the market/economy. However there are diminishing returns to diversification. Going from 10 stocks to 20 stocks gives a sharp reduction in risk. Going from 50 stocks to 100 stocks gives very little reduction in risk. Going beyond 100 stocks gives almost zero reduction in risk. Hence, there is little to gain by diversifying beyond a point. The more serious problem lies in the stocks that we take into an index when it is broadened. If the stock is illiquid, the observed prices yield contaminated information and actually worsen an index.

2.4 Types of indexes

Most of the commonly followed stock market indexes are of the following two types: Market capitalization weighted index or price weighted index. In a market capitalization weighted index, each stock in the index affects the index value in proportion to the market value of all shares outstanding. A price weighted index is one that gives a weight to each stock that is proportional to its stock price. Indexes can also be equally weighted. Recently, major indices in the world like the S&P 500 and the FTSE-100 have shifted to a new method of index calculation called the "Free float" method. We take a look at a few methods of index calculation.

Table 2.1 Market capitalization weighted index calculation

In the example below we can see that each stock affects the index value in proportion to the market value of all the outstanding shares. In the present example, the base index = 1000 and the index value works out to be 1002.60

$$\text{Index} = \frac{7330566.20}{7311383.40} * 1000 = 1002.62$$

Company	Current Market capitalization (Rs.Lakh)	Base Market capitalization (Rs.Lakh)
Grasim Inds	1,668,791.10	1,654,247.50
Telco	872,686.30	860,018.25
SBI	1,452,587.65	1,465,218.80
Wipro	2,675,613.30	2,669,339.55
Bajaj	660,887.85	662,559.30
Total	7,330,566.20	7,311,383.40

1. *Price weighted index*: In a price weighted index each stock is given a weight proportional to its stock price.

2. *Market capitalization weighted index*: In this type of index, the equity price is weighted by the market capitalization of the company (share price * number of outstanding shares). Hence each constituent stock in the index affects the index value in proportion to the market value of all the outstanding shares. This index forms the underlying for a lot of index based products like index funds and index futures. Table 2.1 gives an example of how market capitalization weighted index is calculated.

   In the market capitalization weighted method,

   $$\text{Index} = \frac{\text{Current market capitalisation}}{\text{Base market capitalisation}} * \text{Base value}$$

   where :
   Current market capitalization = Sum of (current market price * outstanding shares) of all securities in the index.
   Base market capitalization= Sum of (market price * issue size) of all securities as on base date.

2.5 Desirable attributes of an index

A good market index should have three attributes:

1. It should capture the behavior of a large variety of different portfolios in the market.

2. The stocks included in the index should be highly liquid.

3. It should be professionally maintained.

2.5.1 Capturing behavior of portfolios

A good market index should accurately reflect the behavior of the overall market as well as of different portfolios. This is achieved by diversification in such a manner that a portfolio is not vulnerable to any individual stock or industry risk. A well–diversified index is more representative of the market. However there are diminishing returns from diversification. There is very little gain by diversifying beyond a point. The more serious problem lies in the stocks that are included in the index when it is diversified. We end up including illiquid stocks, which actually worsens the index. Since an illiquid stock does not reflect the current price behavior of the market, its inclusion in index results in an index, which reflects, delayed or stale price behavior rather than current price behavior of the market.

2.5.2 Including liquid stocks

Liquidity is much more than trading frequency. It is about ability to transact at a price, which is very close to the current market price. For example, a stock is considered liquid if one can buy some shares at around Rs.320.05 and sell at around Rs. 319.95, when the market price is ruling at Rs.320. A liquid stock has very tight bid–ask spread.

2.5.3 Maintaining professionally

It is now clear that an index should contain as many stocks with as little impact cost as possible. This necessarily means that the same set of stocks would not satisfy these criteria at all times. A good index methodology must therefore incorporate a steady pace of change in the index set. It is crucial that such changes are made at a steady pace. It is very healthy to make a few changes every year, each of which is small and does not dramatically alter the character of the index. On a regular basis, the index set should be reviewed, and brought in line with the current state of market. To meet the application needs of users, a time series of the index should be available.

2.6 The S&P CNX Nifty

What makes a good stock market index for use in an index futures and index options market? Several issues play a role in terms of the choice of index. We will discuss how the S&P CNX Nifty addresses some of these issues.

Diversification As mentioned earlier, a stock market index should be well–diversifi ed, thus ensuring that hedgers or speculators are not vulnerable to individual–company or industry risk.

The S&P CNX Nifty is an market capitalisation index based upon solid economic research. It was designed not only as a barometer of market movement but also to be a foundation of the new world of financial products based on the index like index futures, index options and index funds. A trillion calculations were expended to evolve the rules inside the S&P CNX Nifty index. The results of this work are remarkably simple: (a) the correct size to use is 50, (b) stocks considered for the S&P CNX Nifty must be liquid by the 'impact cost' criterion, (c) the largest 50 stocks that meet the criterion go into the index.

S&P CNX Nifty is a contrast to the adhoc methods that have gone into index construction in the preceding years, where indexes were made out of intuition and lacked a scientific basis. The research that led up to S&P CNX Nifty is well-respected internationally as a pioneering effort in better understanding how to make a stock market index.

The Nifty is uniquely equipped as an index for the index derivatives market owing to its (a) low market impact cost and (b) high hedging effectiveness. The good diversification of Nifty generates low initial margin requirement. Finally, Nifty is calculated using NSE prices, the most liquid exchange in India, thus making it easier to do arbitrage for index derivatives.

Box 2.3: The S&P CNX Nifty

Liquidity of the index The index should be easy to trade on the cash market. This is partly related to the choice of stocks in the index. High liquidity of index components implies that the *information* in the index is less noisy.

Operational issues The index should be professionally maintained, with a steady evolution of securities in the index to keep pace with changes in the economy. The calculations involved in the index should be accurate and reliable. When a stock trades at multiple venues, index computation should be done using prices from the most liquid market.

2.6.1 Impact cost

Market impact cost is a measure of the liquidity of the market. It reflects the costs faced when actually trading an index. For a stock to qualify for possible inclusion into the Nifty, it has to have market impact cost of below 0.75% when doing Nifty trades of half a crore rupees. The market impact cost on a trade of Rs.3 million of the full Nifty works out to be about 0.05%. This means that if Nifty is at 2000, a buy order goes through at 2001, i.e.2000+(2000*0.0005) and a sell order gets 1999, i.e. 2000-(2000*0.0005).

2.6.2 Hedging effectiveness

Hedging effectiveness is a measure of the extent to which an index correlates with a portfolio, whatever the portfolio may be. Nifty correlates better with all kinds of portfolios in India as compared to other indexes. This holds good for all kinds of portfolios, not just those that contain index stocks. Similarly, the CNX IT and BANK Nifty contracts which NSE trades in, correlate well with information technology and banking sector portfolios.

Nifty, CNX IT and CNX Bank (underlying index for BANK Nifty) indices are owned, computed and maintained by India Index Services & Products Limited (IISL), a company setup by NSE and CRISIL with technical assistance from Standard & Poor's.

2.7 Applications of index

Besides serving as a barometer of the economy/market, the index also has other applications in finance.

2.7.1 Index derivatives

Index derivatives are derivative contracts which have the index as the underlying. The most popular index derivatives contracts the world over are index futures and index options. NSE's market index, the S&P CNX Nifty was scientifically designed to enable the launch of index–based products like index derivatives and index funds. The first derivative contract to be traded on NSE's market was the index futures contract with the Nifty as the underlying. This was followed by Nifty options and thereafter by sectoral indexes, CNX IT and BANK Nifty contracts.

2.7.2 Index funds

An index fund is a fund that tries to replicate the index returns. It does so by investing in index stocks in the proportions in which these stocks exist in the index. The goal of the index fund is to achieve the same performance as the index it tracks.

For instance, a Nifty index fund would seek to get the same return as the Nifty index. Since the Nifty has 50 stocks, the fund would buy all 50 stocks in the proportion in which they exist in the Nifty. Once invested, the fund will track the index, i.e. if the Nifty goes up, the value of the fund will go up to the same extent as the Nifty. If the Nifty falls, the value of the index fund will fall to the same extent as the Nifty. The most useful kind of market index is one where the weight attached to a stock is proportional to its market capitalization, as in the case of Nifty. Index funds are easy to construct for this kind of index since the index fund does not need to trade in response to price fluctuations. Trading is only required in response to issuance of shares, mergers, etc.

2.7.3 Exchange Traded Funds

Exchange Traded Funds(ETFs) are innovative products, which first came into existence in the USA in 1993. They have gained prominence over the last few years with over $300 billion invested as of end 2001 in about 360 ETFs globally. About 60% of trading volume on the American Stock Exchange is from ETFs. Among the popular ones are SPDRs(Spiders) based on the S&P 500 Index, QQQs(Cubes) based on the Nasdaq-100 Index, iSHARES based on MSCI Indices and TRAHK(Tracks) based on the Hang Seng Index.

ETFs provide exposure to an index or a basket of securities that trade on the exchange like a single stock. They have a number of advantages over traditional open–ended funds as they can

Futures markets can be used for creating synthetic index funds. Synthetic index funds created using futures contracts have advantages of simplicity and low costs. The simplicity stems from the fact that index futures automatically track the index. The cost advantages stem from the fact that the costs of establishing and re-balancing the fund are substantially reduced because commissions and bid-ask spreads are lower in the futures markets than in the equity markets.
The methodology for creating a synthetic index fund is to combine index futures contracts with bank deposits or treasury bills. The index fund uses part of its money as margin on the futures market and the rest is invested at the risk-free rate of return. This methodology however does require frequent roll-over as futures contracts expire.
Index funds can also use the futures market for the purpose of spreading index sales or purchases over a period of time. Take the case of an index fund which has raised Rs.100 crore from the market. To reduce the tracking error, this money must be invested in the index immediately. However large trades face large impact costs. What the fund can do is, the moment it receives the subscriptions it can buy index futures. Then gradually over a period of say a month, it can keep acquiring the underlying index stocks. As it acquires the index stocks, it should unwind its position on the futures market by selling futures to the extent of stock acquired. This should continue till the fund is fully invested in the index.

Box 2.4: Use of futures market by index funds

be bought and sold on the exchange at prices that are usually close to the actual intra–day NAV of the scheme. They are an innovation to traditional mutual funds as they provide investors a fund that closely tracks the performance of an index with the ability to buy/sell on an intra–day basis. Unlike listed closed–ended funds, which trade at substantial premia or more frequently at discounts to NAV, ETFs are structured in a manner which allows to create new units and redeem outstanding units directly with the fund, thereby ensuring that ETFs trade close to their actual NAVs.

The first ETF in India, "Nifty BeEs"(Nifty Benchmark Exchange Traded Scheme) based on S&P CNX Nifty, was launched in December 2001 by Benchmark Mutual Fund. It is bought and sold like any other stock on NSE and has all characteristics of an index fund. It would provide returns that closely correspond to the total return of stocks included in Nifty.

Solved problems

Q: Nifty includes the ____ most liquid stocks that trade on NSE.

1. 30
2. 50
3. 100
4. 500

A: The correct answer is number 2. ••

Q: The Indian company which provides professional index management services is

1. IISL
2. NSCCL
3. S&P
4. CRISIL

A: The correct answer is number 1. ••

Q: Impact cost measures the

1. Volatility of the stock
2. Liquidity of the stock
3. Return on a stock
4. None of above

A: The correct answer is number 2. ••

Q: Assume that the base value of a market capitalization weighted index were 1000 and the base market capitalization were Rs.35000 crore. If the current market capitalization is Rs.77,000 crore, the index is at

1. 2200
2. 2250
3. 1200
4. 1350

A: The current index value is (77000/35000)*1000. The correct answer is number 1. ••

Q: The market impact cost on a trade of Rs.3 million of the full Nifty works out to be about 0.5%. This means that if Nifty is at 2000, a buy order will go through at roughly

1. 2010
2. 2050
3. 2500
4. None of the above

A: 0.5% of 2000 works out to be 5. Hence a buy order will go through at 2010. The correct answer is number 1. ••

Q: Index funds are _____ managed

1. Actively
2. Passively
3. Family
4. None of the above

A: The correct answer is number 2. ••

Chapter 3

Introduction to futures and options

In recent years, derivatives have become increasingly important in the field of finance. While futures and options are now actively traded on many exchanges, forward contracts are popular on the OTC market. In this chapter we shall study in detail these three derivative contracts.

3.1 Forward contracts

A forward contract is an agreement to buy or sell an asset on a specified date for a specified price. One of the parties to the contract assumes a long position and agrees to buy the underlying asset on a certain specified future date for a certain specified price. The other party assumes a short position and agrees to sell the asset on the same date for the same price. Other contract details like delivery date, price and quantity are negotiated bilaterally by the parties to the contract. The forward contracts are normally traded outside the exchanges.

The salient features of forward contracts are:

- They are bilateral contracts and hence exposed to counter–party risk.
- Each contract is custom designed, and hence is unique in terms of contract size, expiration date and the asset type and quality.
- The contract price is generally not available in public domain.
- On the expiration date, the contract has to be settled by delivery of the asset.
- If the party wishes to reverse the contract, it has to compulsorily go to the same counterparty, which often results in high prices being charged.

However forward contracts in certain markets have become very standardized, as in the case of foreign exchange, thereby reducing transaction costs and increasing transactions volume. This process of standardization reaches its limit in the organized futures market.

Forward contracts are very useful in hedging and speculation. The classic hedging application would be that of an exporter who expects to receive payment in dollars three months later. He is exposed to the risk of exchange rate fluctuations. By using the currency forward market to sell

dollars forward, he can lock on to a rate today and reduce his uncertainty. Similarly an importer who is required to make a payment in dollars two months hence can reduce his exposure to exchange rate fluctuations by buying dollars forward.

If a speculator has information or analysis, which forecasts an upturn in a price, then he can go long on the forward market instead of the cash market. The speculator would go long on the forward, wait for the price to rise, and then take a reversing transaction to book profits. Speculators may well be required to deposit a margin upfront. However, this is generally a relatively small proportion of the value of the assets underlying the forward contract. The use of forward markets here supplies leverage to the speculator.

3.2 Limitations of forward markets

Forward markets world-wide are afflicted by several problems:

- Lack of centralization of trading,
- Illiquidity, and
- Counterparty risk

In the first two of these, the basic problem is that of too much flexibility and generality. The forward market is like a real estate market in that any two consenting adults can form contracts against each other. This often makes them design terms of the deal which are very convenient in that specific situation, but makes the contracts non-tradable.

Counterparty risk arises from the possibility of default by any one party to the transaction. When one of the two sides to the transaction declares bankruptcy, the other suffers. Even when forward markets trade standardized contracts, and hence avoid the problem of illiquidity, still the counterparty risk remains a very serious issue.

3.3 Introduction to futures

Futures markets were designed to solve the problems that exist in forward markets. A futures contract is an agreement between two parties to buy or sell an asset at a certain time in the future at a certain price. But unlike forward contracts, the futures contracts are standardized and exchange traded. To facilitate liquidity in the futures contracts, the exchange specifies certain standard features of the contract. It is a standardized contract with standard underlying instrument, a standard quantity and quality of the underlying instrument that can be delivered,(or which can be used for reference purposes in settlement) and a standard timing of such settlement. A futures contract may be offset prior to maturity by entering into an equal and opposite transaction. More than 99% of futures transactions are offset this way.

The standardized items in a futures contract are:

- Quantity of the underlying
- Quality of the underlying

Merton Miller, the 1990 Nobel laureate had said that "financial futures represent the most significant financial innovation of the last twenty years." The first exchange that traded financial derivatives was launched in Chicago in the year 1972. A division of the Chicago Mercantile Exchange, it was called the International Monetary Market(IMM) and traded currency futures. The brain behind this was a man called Leo Melamed, acknowledged as the "father of financial futures" who was then the Chairman of the Chicago Mercantile Exchange. Before IMM opened in 1972, the Chicago Mercantile Exchange sold contracts whose value was counted in millions. By 1990, the underlying value of all contracts traded at the Chicago Mercantile Exchange totaled 50 trillion dollars.
These currency futures paved the way for the successful marketing of a dizzying array of similar products at the Chicago Mercantile Exchange, the Chicago Board of Trade, and the Chicago Board Options Exchange. By the 1990s, these exchanges were trading futures and options on everything from Asian and American stock indexes to interest–rate swaps, and their success transformed Chicago almost overnight into the risk–transfer capital of the world.

Box 3.5: The first financial futures market

Table 3.1 Distinction between futures and forwards

Futures	Forwards
Trade on an organized exchange	OTC in nature
Standardized contract terms	Customised contract terms
hence more liquid	hence less liquid
Requires margin payments	No margin payment
Follows daily settlement	Settlement happens at end of period

- The date and the month of delivery
- The units of price quotation and minimum price change
- Location of settlement

3.4 Distinction between futures and forwards contracts

Forward contracts are often confused with futures contracts. The confusion is primarily because both serve essentially the same economic functions of allocating risk in the presence of future price uncertainty. However futures are a significant improvement over the forward contracts as they eliminate counterparty risk and offer more liquidity. Table 3.1 lists the distinction between the two.

3.5 Futures terminology

- *Spot price*: The price at which an asset trades in the spot market.
- *Futures price*: The price at which the futures contract trades in the futures market.

- *Contract cycle*: The period over which a contract trades. The index futures contracts on the NSE have one-month, two-months and three-months expiry cycles which expire on the last Thursday of the month. Thus a January expiration contract expires on the last Thursday of January and a February expiration contract ceases trading on the last Thursday of February. On the Friday following the last Thursday, a new contract having a three-month expiry is introduced for trading.

- *Expiry date*: It is the date specified in the futures contract. This is the last day on which the contract will be traded, at the end of which it will cease to exist.

- *Contract size*: The amount of asset that has to be delivered under one contract. For instance, the contract size on NSE's futures market is 200 Nifties.

- *Basis*: In the context of financial futures, basis can be defined as the futures price minus the spot price. There will be a different basis for each delivery month for each contract. In a normal market, basis will be positive. This reflects that futures prices normally exceed spot prices.

- *Cost of carry*: The relationship between futures prices and spot prices can be summarized in terms of what is known as the cost of carry. This measures the storage cost plus the interest that is paid to finance the asset less the income earned on the asset.

- *Initial margin*: The amount that must be deposited in the margin account at the time a futures contract is first entered into is known as initial margin.

- *Marking-to-market*: In the futures market, at the end of each trading day, the margin account is adjusted to reflect the investor's gain or loss depending upon the futures closing price. This is called marking–to–market.

- *Maintenance margin*: This is somewhat lower than the initial margin. This is set to ensure that the balance in the margin account never becomes negative. If the balance in the margin account falls below the maintenance margin, the investor receives a margin call and is expected to top up the margin account to the initial margin level before trading commences on the next day.

3.6 Introduction to options

In this section, we look at the next derivative product to be traded on the NSE, namely options. Options are fundamentally different from forward and futures contracts. An option gives the holder of the option the right to do something. The holder does not have to exercise this right. In contrast, in a forward or futures contract, the two parties have committed themselves to doing something. Whereas it costs nothing(except margin requirements) to enter into a futures contract, the purchase of an option requires an up–front payment.

3.7 Option terminology

- *Index options*: These options have the index as the underlying. Some options are European while others are American. Like index futures contracts, index options contracts are also cash settled.

Although options have existed for a long time, they were traded OTC, without much knowledge of valuation. The first trading in options began in Europe and the US as early as the seventeenth century. It was only in the early 1900s that a group of firms set up what was known as the put and call Brokers and Dealers Association with the aim of providing a mechanism for bringing buyers and sellers together. If someone wanted to buy an option, he or she would contact one of the member firms. The firm would then attempt to find a seller or writer of the option either from its own clients or those of other member firms. If no seller could be found, the firm would undertake to write the option itself in return for a price.
This market however suffered from two deficiencies. First, there was no secondary market and second, there was no mechanism to guarantee that the writer of the option would honor the contract.
In 1973, Black, Merton and Scholes invented the famed Black-Scholes formula. In April 1973, CBOE was set up specifically for the purpose of trading options. The market for options developed so rapidly that by early '80s, the number of shares underlying the option contract sold each day exceeded the daily volume of shares traded on the NYSE. Since then, there has been no looking back.

Box 3.6: History of options

- *Stock options*: Stock options are options on individual stocks. Options currently trade on over 500 stocks in the United States. A contract gives the holder the right to buy or sell shares at the specified price.

- *Buyer of an option*: The buyer of an option is the one who by paying the option premium buys the right but not the obligation to exercise his option on the seller/writer.

- *Writer of an option*: The writer of a call/put option is the one who receives the option premium and is thereby obliged to sell/buy the asset if the buyer exercises on him.

There are two basic types of options, call options and put options.

- *Call option*: A call option gives the holder the right but not the obligation to buy an asset by a certain date for a certain price.

- *Put option*: A put option gives the holder the right but not the obligation to sell an asset by a certain date for a certain price.

- *Option price/premium*: Option price is the price which the option buyer pays to the option seller. It is also referred to as the option premium.

- *Expiration date*: The date specified in the options contract is known as the expiration date, the exercise date, the strike date or the maturity.

- *Strike price*: The price specified in the options contract is known as the strike price or the exercise price.

- *American options*: American options are options that can be exercised at any time upto the expiration date. Most exchange-traded options are American.

- *European options*: European options are options that can be exercised only on the expiration date itself. European options are easier to analyze than American options, and properties of an American option are frequently deduced from those of its European counterpart.

- *In-the-money option*: An in-the-money (ITM) option is an option that would lead to a positive cashflow to the holder if it were exercised immediately. A call option on the index is said to be in-the-money when the current index stands at a level higher than the strike price (i.e. spot price $>$ strike price). If the index is much higher than the strike price, the call is said to be deep ITM. In the case of a put, the put is ITM if the index is below the strike price.

- *At-the-money option*: An at-the-money (ATM) option is an option that would lead to zero cashflow if it were exercised immediately. An option on the index is at-the-money when the current index equals the strike price (i.e. spot price = strike price).

- *Out-of-the-money option*: An out-of-the-money (OTM) option is an option that would lead to a negative cashflow it it were exercised immediately. A call option on the index is out-of-the-money when the current index stands at a level which is less than the strike price (i.e. spot price $<$ strike price). If the index is much lower than the strike price, the call is said to be deep OTM. In the case of a put, the put is OTM if the index is above the strike price.

- *Intrinsic value of an option*: The option premium can be broken down into two components - intrinsic value and time value. The intrinsic value of a call is the amount the option is ITM, if it is ITM. If the call is OTM, its intrinsic value is zero. Putting it another way, the intrinsic value of a call is $Max[0, (S_t - K)]$ which means the intrinsic value of a call is the greater of 0 or $(S_t - K)$. Similarly, the intrinsic value of a put is $Max[0, K - S_t]$,i.e. the greater of 0 or $(K - S_t)$. K is the strike price and S_t is the spot price.

- *Time value of an option*: The time value of an option is the difference between its premium and its intrinsic value. Both calls and puts have time value. An option that is OTM or ATM has only time value. Usually, the maximum time value exists when the option is ATM. The longer the time to expiration, the greater is an option's time value, all else equal. At expiration, an option should have no time value.

3.8 Futures and options

An interesting question to ask at this stage is - when would one use options instead of futures? Options are different from futures in several interesting senses. At a practical level, the option buyer faces an interesting situation. He pays for the option in full at the time it is purchased. After this, he only has an upside. There is no possibility of the options position generating any further losses to him (other than the funds already paid for the option). This is different from futures, which is free to enter into, but can generate very large losses. This characteristic makes options attractive to many occasional market participants, who cannot put in the time to closely monitor their futures positions.

Buying put options is buying insurance. To buy a put option on Nifty is to buy insurance which reimburses the full extent to which Nifty drops below the strike price of the put option. This is attractive to many people, and to mutual funds creating "guaranteed return products".

Options made their first major mark in financial history during the tulip-bulb mania in seventeenth-century Holland. It was one of the most spectacular *get rich quick* binges in history. The first tulip was brought into Holland by a botany professor from Vienna. Over a decade, the tulip became the most popular and expensive item in Dutch gardens. The more popular they became, the more Tulip bulb prices began rising. That was when options came into the picture. They were initially used for hedging. By purchasing a call option on tulip bulbs, a dealer who was committed to a sales contract could be assured of obtaining a fixed number of bulbs for a set price. Similarly, tulip-bulb growers could assure themselves of selling their bulbs at a set price by purchasing put options. Later, however, options were increasingly used by speculators who found that call options were an effective vehicle for obtaining maximum possible gains on investment. As long as tulip prices continued to skyrocket, a call buyer would realize returns far in excess of those that could be obtained by purchasing tulip bulbs themselves. The writers of the put options also prospered as bulb prices spiralled since writers were able to keep the premiums and the options were never exercised. The tulip-bulb market collapsed in 1636 and a lot of speculators lost huge sums of money. Hardest hit were put writers who were unable to meet their commitments to purchase Tulip bulbs.

Box 3.7: Use of options in the seventeenth-century

Table 3.2 Distinction between futures and options

Futures	Options
Exchange traded, with novation	Same as futures.
Exchange defines the product	Same as futures.
Price is zero, strike price moves	Strike price is fixed, price moves.
Price is zero	Price is always positive.
Linear payoff	Nonlinear payoff.
Both long and short at risk	Only short at risk.

The Nifty index fund industry will find it very useful to make a bundle of a Nifty index fund and a Nifty put option to create a new kind of a Nifty index fund, which gives the investor protection against extreme drops in Nifty. Selling put options is selling insurance, so anyone who feels like earning revenues by selling insurance can set himself up to do so on the index options market.

More generally, options offer "nonlinear payoffs" whereas futures only have "linear payoffs". By combining futures and options, a wide variety of innovative and useful payoff structures can be created.

3.9 Index derivatives

Index derivatives are derivative contracts which derive their value from an underlying index. The two most popular index derivatives are index futures and index options. Index derivatives have become very popular worldwide. Index derivatives offer various advantages and hence have become very popular.

- Institutional and large equity-holders need portfolio-hedging facility. Index–derivatives are more suited to them and more cost–effective than derivatives based on individual stocks. Pension funds in the US are known to use stock index futures for risk hedging purposes.

- Index derivatives offer ease of use for hedging any portfolio irrespective of its composition.

- Stock index is difficult to manipulate as compared to individual stock prices, more so in India, and the possibility of cornering is reduced. This is partly because an individual stock has a limited supply, which can be cornered.

- Stock index, being an average, is much less volatile than individual stock prices. This implies much lower capital adequacy and margin requirements.

- Index derivatives are cash settled, and hence do not suffer from settlement delays and problems related to bad delivery, forged/fake certificates.

Solved Problems

Q: Which of the following cannot be an underlying asset for a financial derivative contract?

1. Equity index
2. Commodities
3. Interest rate
4. Foreign exchange

A: The correct answer is 2 ••

Q: Which of the following exchanges was the first to start trading financial futures?

1. Chicago Board of Trade
2. Chicago Mercantile Exchange
3. Chicago Board Options Exchange
4. London International Financial Futures and Options Exchange

A: The correct answer is 2. ••

Q: In an options contract, the option lies with the

1. Buyer
2. Seller
3. Both
4. Exchange

A: The option to exercise lies with the buyer. The correct answer is number 1. ••

Q: The potential returns on a futures position are:

1. Limited
2. Unlimited
3. a function of the volatility of the index
4. None of the above

A: The correct answer is number 2. ••

Q: Two persons agree to exchange 100 gms of gold three months later at Rs.400/gm. This is an example of a

1. Futures contract
2. Forward contract
3. Spot contract
4. None of the above

A: The correct answer is number 2. ••

Q: Spot value of Nifty is 2140. An investor buys a one month nifty 2157 call option for a premium of Rs.7. The option is

1. in the money
2. at the money
3. out of the money
4. None of the above

A: The correct answer is number 3. ••

Q: A call option at a strike of Rs.176 is selling at a premium of Rs.18. At what price will it break even for the buyer of the option?

1. Rs.196
2. Rs.204
3. Rs.187
4. Rs.194

A: To recover the option premium of Rs.18, the spot will have to rise to 176 + 18. The correct answer is number 4. ••

Q: Typically option premium is

1. Less than the sum of intrinsic value and time value
2. Greater than the sum of intrinsic value and time value
3. Equal to the sum of intrinsic value and time value
4. Independent of intrinsic value and time value

A: The correct answer is number 3. ••

Q: A stock is currently selling at Rs.70. The call option to buy the stock at Rs.65 costs Rs.9. What is the time value of the option?

1. Rs.4
2. Rs.5
3. Rs.3
4. Rs.2

A: The correct answer is number 1. ••

Q: Spot value of S&P CNX Nifty is 2200. An investor bought a one-month S&P CNX Nifty 2220 call option for a premium of Rs.10. The options is

1. In-the-money
2. At-the-money
3. Out-of-money
4. None of the above

A: The correct answer is number 3. ••

Q: A stock currently sells at 120. The put option to sell the stock sells at Rs.134 costs Rs.18. The time value of the option is

1. Rs.18
2. Rs.4
3. Rs.14
4. Rs.12

A: The correct answer is number 2. ••

Chapter 4

Applications of futures and options

The phenomenal growth of financial derivatives across the world is attributed the fulfilment of needs of hedgers, speculators and arbitraguers by these products. In this chapter we first look at how trading futures differs from trading the underlying spot. We then look at the payoff of these contracts, and finally at how these contracts can be used by various entities in the economy.

A payoff is the likely profit/loss that would accrue to a market participant with change in the price of the underlying asset. This is generally depicted in the form of payoff diagrams which show the price of the underlying asset on the X–axis and the profits/losses on the Y–axis.

4.1 Trading underlying versus trading single stock futures

The single stock futures market in India has been a great success story across the world. NSE ranks first in the world in terms of number of contracts traded in single stock futures. One of the reasons for the success could be the ease of trading and settling these contracts.

To trade securities, a customer must open a security trading account with a securities broker and a demat account with a securities depository. Buying security involves putting up all the money upfront. With the purchase of shares of a company, the holder becomes a part owner of the company. The shareholder typically receives the rights and privileges associated with the security, which may include the receipt of dividends, invitation to the annual shareholders meeting and the power to vote.

Selling securities involves buying the security before selling it. Even in cases where short selling is permitted, it is assumed that the securities broker owns the security and then "lends" it to the trader so that he can sell it. Besides, even if permitted, short sales on security can only be executed on an up-tick.

To trade futures, a customer must open a futures trading account with a derivatives broker. Buying futures simply involves putting in the margin money. They enable the futures traders to take a position in the underlying security without having to open an account with a securities broker. With the purchase of futures on a security, the holder essentially makes a legally binding promise or obligation to buy the underlying security at some point in the future(the expiration date of the contract). Security futures do not represent ownership in a corporation and the holder

Figure 4.1 Payoff for a buyer of Nifty futures

The figure shows the profits/losses for a long futures position.The investor bought futures when the index was at 2220. If the index goes up, his futures position starts making profit. If the index falls, his futures position starts showing losses.

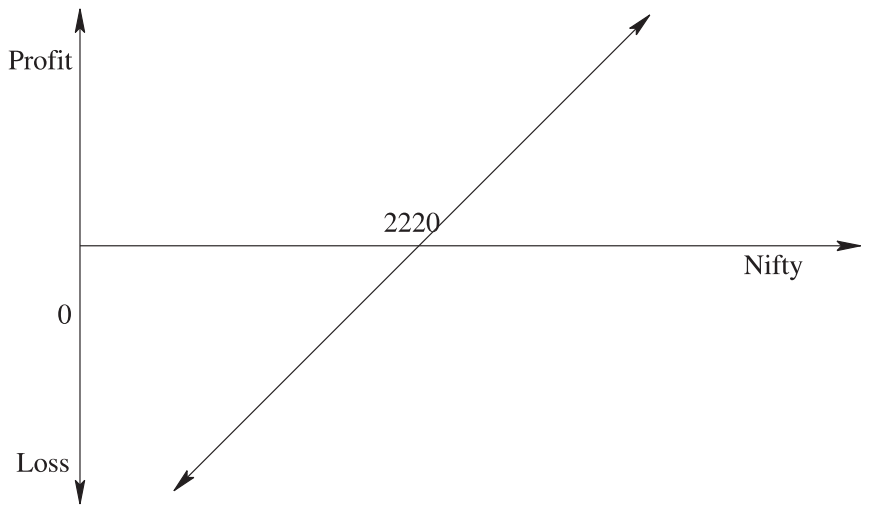

is therefore not regarded as a shareholder.

A futures contract represents a promise to transact at some point in the future. In this light, a promise to sell security is just as easy to make as a promise to buy security. Selling security futures without previously owning them simply obligates the trader to selling a certain amount of the underlying security at some point in the future. It can be done just as easily as buying futures, which obligates the trader to buying a certain amount of the underlying security at some point in the future. In the following sections we shall look at some uses of security future.

4.2 Futures payoffs

Futures contracts have linear payoffs. In simple words, it means that the losses as well as profits for the buyer and the seller of a futures contract are unlimited. These linear payoffs are fascinating as they can be combined with options and the underlying to generate various complex payoffs.

4.2.1 Payoff for buyer of futures: Long futures

The payoff for a person who buys a futures contract is similar to the payoff for a person who holds an asset. He has a potentially unlimited upside as well as a potentially unlimited downside. Take the case of a speculator who buys a two-month Nifty index futures contract when the Nifty

Figure 4.2 Payoff for a seller of Nifty futures

The fi gure shows the profi ts/losses for a short futures position.The investor sold futures when the index was at 2220. If the index goes down, his futures position starts making profi t. If the index rises, his futures position starts showing losses.

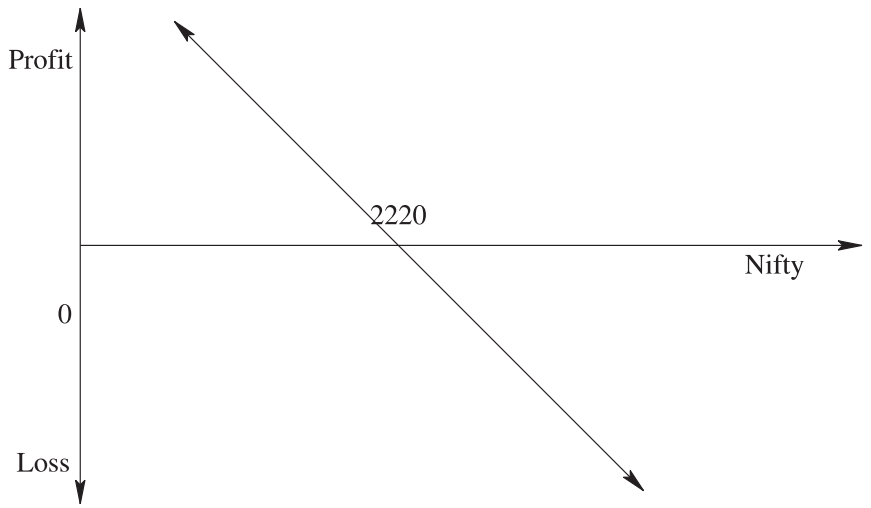

stands at 2220. The underlying asset in this case is the Nifty portfolio. When the index moves up, the long futures position starts making profits, and when the index moves down it starts making losses. Figure 4.1 shows the payoff diagram for the buyer of a futures contract.

4.2.2 Payoff for seller of futures: Short futures

The payoff for a person who sells a futures contract is similar to the payoff for a person who shorts an asset. He has a potentially unlimited upside as well as a potentially unlimited downside. Take the case of a speculator who sells a two-month Nifty index futures contract when the Nifty stands at 2220. The underlying asset in this case is the Nifty portfolio. When the index moves down, the short futures position starts making profits, and when the index moves up, it starts making losses. Figure 4.2 shows the payoff diagram for the seller of a futures contract.

4.3 Pricing futures

Pricing of futures contract is very simple. Using the cost–of–carry logic, we calculate the fair value of a futures contract. Everytime the observed price deviates from the fair value, arbitragers would enter into trades to capture the arbitrage profit. This in turn would push the futures price back to its fair value. The cost of carry model used for pricing futures is given below:

$$\mathrm{F} = \mathrm{S}e^{rT}$$

where:

r Cost of fi nancing(using continuously compounded interest rate)

T Time till expiration in years

e 2.71828

Example: Security XYZ Ltd trades in the spot market at Rs.1150. Money can be invested at 11% p.a. The fair value of a one–month futures contract on XYZ is calculated as follows:

$$\begin{aligned} F &= Se^{rT} \\ &= 1150 * e^{0.11 * \frac{1}{12}} \\ &= 1160 \end{aligned}$$

4.4 Application of futures

We look here at some applications of futures contracts. We refer to single stock futures. However since the index is nothing but a security whose price or level is a weighted average of securities constituiting an index, all strategies that can be implemented using stock futures can also be implemented using index futures.

4.4.1 Hedging: Long security, sell futures

Futures can be used as an effective risk–management tool. Take the case of an investor who holds the shares of a company and gets uncomfortable with market movements in the short run. He sees the value of his security falling from Rs.450 to Rs.390. In the absence of stock futures, he would either suffer the discomfort of a price fall or sell the security in anticipation of a market upheaval. With security futures he can minimize his price risk. All he need do is enter into an offsetting stock futures position, in this case, take on a short futures position. Assume that the spot price of the security he holds is Rs.390. Two–month futures cost him Rs.402. For this he pays an initial margin. Now if the price of the security falls any further, he will suffer losses on the security he holds. However, the losses he suffers on the security, will be offset by the profits he makes on his short futures position. Take for instance that the price of his security falls to Rs.350. The fall in the price of the security will result in a fall in the price of futures. Futures will now trade at a price lower than the price at which he entered into a short futures position. Hence his short futures position will start making profits. The loss of Rs.40 incurred on the security he holds, will be made up by the profits made on his short futures position.

Index futures in particular can be very effectively used to get rid of the market risk of a portfolio. Every portfolio contains a hidden index exposure or a market exposure. This statement

is true for all portfolios, whether a portfolio is composed of index securities or not. In the case of portfolios, most of the portfolio risk is accounted for by index fluctuations (unlike individual securities, where only 30–60% of the securities risk is accounted for by index fluctuations). Hence a position LONG PORTFOLIO + SHORT NIFTY can often become one–tenth as risky as the LONG PORTFOLIO position!

Suppose we have a portfolio of Rs.1 million which has a beta of 1.25. Then a complete hedge is obtained by selling Rs.1.25 million of Nifty futures.

Warning: Hedging does not always make money. The best that can be achieved using hedging is the removal of unwanted exposure, i.e. unnecessary risk. The hedged position will make less profits than the unhedged position, half the time. One should not enter into a hedging strategy hoping to make excess profits for sure; all that can come out of hedging is reduced risk.

4.4.2 Speculation: Bullish security, buy futures

Take the case of a speculator who has a view on the direction of the market. He would like to trade based on this view. He believes that a particular security that trades at Rs.1000 is undervalued and expect its price to go up in the next two–three months. How can he trade based on this belief? In the absence of a deferral product, he would have to buy the security and hold on to it. Assume he buys a 100 shares which cost him one lakh rupees. His hunch proves correct and two months later the security closes at Rs.1010. He makes a profit of Rs.1000 on an investment of Rs.1,00,000 for a period of two months. This works out to an annual return of 6 percent.

Today a speculator can take exactly the same position on the security by using futures contracts. Let us see how this works. The security trades at Rs.1000 and the two-month futures trades at 1006. Just for the sake of comparison, assume that the minimum contract value is 1,00,000. He buys 100 security futures for which he pays a margin of Rs.20,000. Two months later the security closes at 1010. On the day of expiration, the futures price converges to the spot price and he makes a profit of Rs.400 on an investment of Rs.20,000. This works out to an annual return of 12 percent. Because of the leverage they provide, security futures form an attractive option for speculators.

4.4.3 Speculation: Bearish security, sell futures

Stock futures can be used by a speculator who believes that a particular security is over–valued and is likely to see a fall in price. How can he trade based on his opinion? In the absence of a deferral product, there wasn't much he could do to profit from his opinion. Today all he needs to do is sell stock futures.

Let us understand how this works. Simple arbitrage ensures that futures on an individual securities move correspondingly with the underlying security, as long as there is sufficient liquidity in the market for the security. If the security price rises, so will the futures price. If the security price falls, so will the futures price. Now take the case of the trader who expects to see a fall in the price of ABC Ltd. He sells one two–month contract of futures on ABC at Rs.240(each contact for 100 underlying shares). He pays a small margin on the same. Two months later, when the futures contract expires, ABC closes at 220. On the day of expiration, the

spot and the futures price converges. He has made a clean profit of Rs.20 per share. For the one contract that he bought, this works out to be Rs.2000.

4.4.4 Arbitrage: Overpriced futures: buy spot, sell futures

As we discussed earlier, the cost-of-carry ensures that the futures price stay in tune with the spot price. Whenever the futures price deviates substantially from its fair value, arbitrage opportunities arise.

If you notice that futures on a security that you have been observing seem overpriced, how can you cash in on this opportunity to earn riskless profits? Say for instance, ABC Ltd. trades at Rs.1000. One–month ABC futures trade at Rs.1025 and seem overpriced. As an arbitrageur, you can make riskless profit by entering into the following set of transactions.

1. On day one, borrow funds, buy the security on the cash/spot market at 1000.
2. Simultaneously, sell the futures on the security at 1025.
3. Take delivery of the security purchased and hold the security for a month.
4. On the futures expiration date, the spot and the futures price converge. Now unwind the position.
5. Say the security closes at Rs.1015. Sell the security.
6. Futures position expires with profi t of Rs.10.
7. The result is a riskless profi t of Rs.15 on the spot position and Rs.10 on the futures position.
8. Return the borrowed funds.

When does it make sense to enter into this arbitrage? If your cost of borrowing funds to buy the security is less than the arbitrage profit possible, it makes sense for you to arbitrage. This is termed as cash–and–carry arbitrage. Remember however, that exploiting an arbitrage opportunity involves trading on the spot and futures market. In the real world, one has to build in the transactions costs into the arbitrage strategy.

4.4.5 Arbitrage: Underpriced futures: buy futures, sell spot

Whenever the futures price deviates substantially from its fair value, arbitrage opportunities arise. It could be the case that you notice the futures on a security you hold seem underpriced. How can you cash in on this opportunity to earn riskless profits? Say for instance, ABC Ltd. trades at Rs.1000. One–month ABC futures trade at Rs. 965 and seem underpriced. As an arbitrageur, you can make riskless profit by entering into the following set of transactions.

1. On day one, sell the security in the cash/spot market at 1000.
2. Make delivery of the security.
3. Simultaneously, buy the futures on the security at 965.

4. On the futures expiration date, the spot and the futures price converge. Now unwind the position.
5. Say the security closes at Rs.975. Buy back the security.
6. The futures position expires with a profi t of Rs.10.
7. The result is a riskless profi t of Rs.25 on the spot position and Rs.10 on the futures position.

If the returns you get by investing in riskless instruments is more than the return from the arbitrage trades, it makes sense for you to arbitrage. This is termed as reverse–cash–and–carry arbitrage. It is this arbitrage activity that ensures that the spot and futures prices stay in line with the cost–of–carry. As we can see, exploiting arbitrage involves trading on the spot market. As more and more players in the market develop the knowledge and skills to do cash–and–carry and reverse cash–and–carry, we will see increased volumes and lower spreads in both the cash as well as the derivatives market.

4.5 Options payoffs

The optionality characteristic of options results in a non-linear payoff for options. In simple words, it means that the losses for the buyer of an option are limited, however the profits are potentially unlimited. For a writer, the payoff is exactly the opposite. His profits are limited to the option premium, however his losses are potentially unlimited. These non-linear payoffs are fascinating as they lend themselves to be used to generate various payoffs by using combinations of options and the underlying. We look here at the six basic payoffs.

4.5.1 Payoff profile of buyer of asset: Long asset

In this basic position, an investor buys the underlying asset, Nifty for instance, for 2220, and sells it at a future date at an unknown price, S_t. Once it is purchased, the investor is said to be "long" the asset. Figure 4.3 shows the payoff for a long position on the Nifty.

4.5.2 Payoff profile for seller of asset: Short asset

In this basic position, an investor shorts the underlying asset, Nifty for instance, for 2220, and buys it back at a future date at an unknown price, S_t. Once it is sold, the investor is said to be "short" the asset. Figure 4.4 shows the payoff for a short position on the Nifty.

4.5.3 Payoff profile for buyer of call options: Long call

A call option gives the buyer the right to buy the underlying asset at the strike price specified in the option. The profit/loss that the buyer makes on the option depends on the spot price of the underlying. If upon expiration, the spot price exceeds the strike price, he makes a profit. Higher the spot price, more is the profit he makes. If the spot price of the underlying is less than the strike price, he lets his option expire un-exercised. His loss in this case is the premium he paid

Figure 4.3 Payoff for investor who went Long Nifty at 2220

The figure shows the profits/losses from a long position on the index. The investor bought the index at 2220. If the index goes up, he profits. If the index falls he looses.

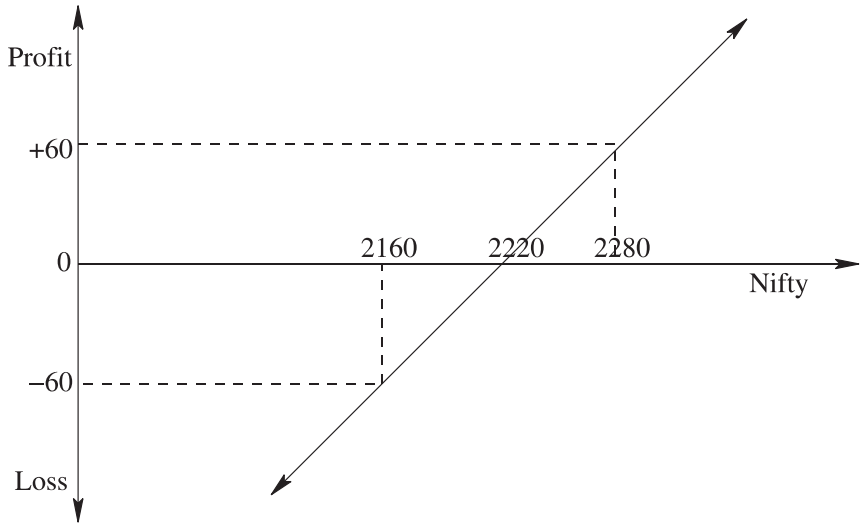

Figure 4.4 Payoff for investor who went Short Nifty at 2220

The figure shows the profits/losses from a short position on the index. The investor sold the index at 2220. If the index falls, he profits. If the index rises, he looses.

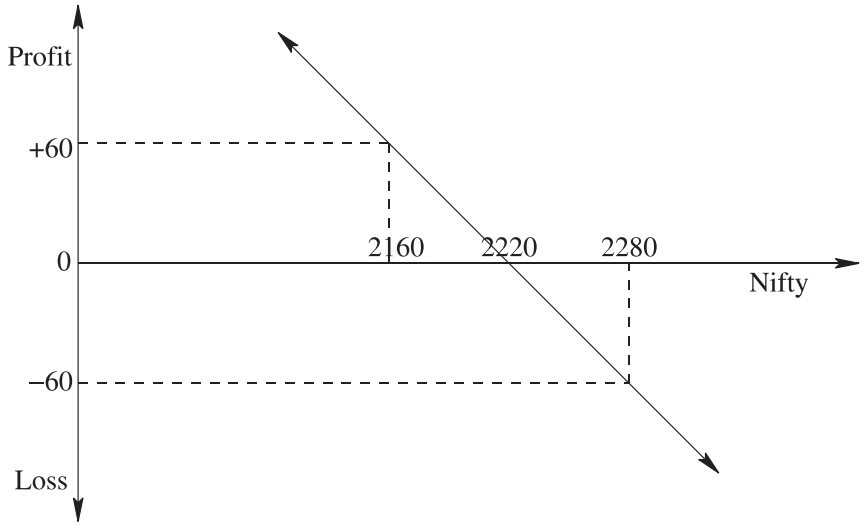

Figure 4.5 Payoff for buyer of call option

The figure shows the profits/losses for the buyer of a three-month Nifty 2250 call option. As can be seen, as the spot Nifty rises, the call option is in-the-money. If upon expiration, Nifty closes above the strike of 2250, the buyer would exercise his option and profit to the extent of the difference between the Nifty-close and the strike price. The profits possible on this option are potentially unlimited. However if Nifty falls below the strike of 2250, he lets the option expire. His losses are limited to the extent of the premium he paid for buying the option.

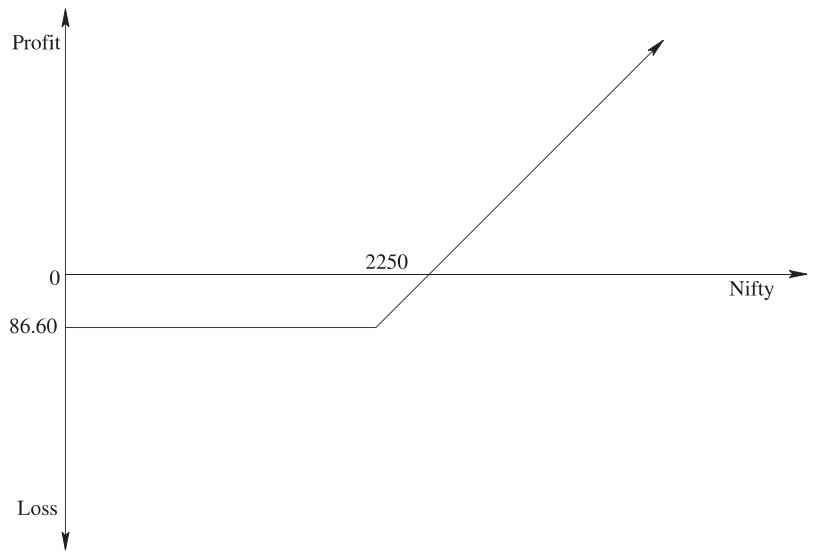

for buying the option. Figure 4.5 gives the payoff for the buyer of a three month call option (often referred to as long call) with a strike of 2250 bought at a premium of 86.60.

4.5.4 Payoff profile for writer of call options: Short call

A call option gives the buyer the right to buy the underlying asset at the strike price specified in the option. For selling the option, the writer of the option charges a premium. The profit/loss that the buyer makes on the option depends on the spot price of the underlying. Whatever is the buyer's profit is the seller's loss. If upon expiration, the spot price exceeds the strike price, the buyer will exercise the option on the writer. Hence as the spot price increases the writer of the option starts making losses. Higher the spot price, more is the loss he makes. If upon expiration the spot price of the underlying is less than the strike price, the buyer lets his option expire unexercised and the writer gets to keep the premium. Figure 4.6 gives the payoff for the writer of a three month call option (often referred to as short call) with a strike of 2250 sold at a premium of 86.60.

Figure 4.6 Payoff for writer of call option

The figure shows the profits/losses for the seller of a three-month Nifty 2250 call option. As the spot Nifty rises, the call option is in-the-money and the writer starts making losses . If upon expiration, Nifty closes above the strike of 2250, the buyer would exercise his option on the writer who would suffer a loss to the extent of the difference between the Nifty-close and the strike price. The loss that can be incurred by the writer of the option is potentially unlimited, whereas the maximum profit is limited to the extent of the up-front option premium of Rs.86.60 charged by him.

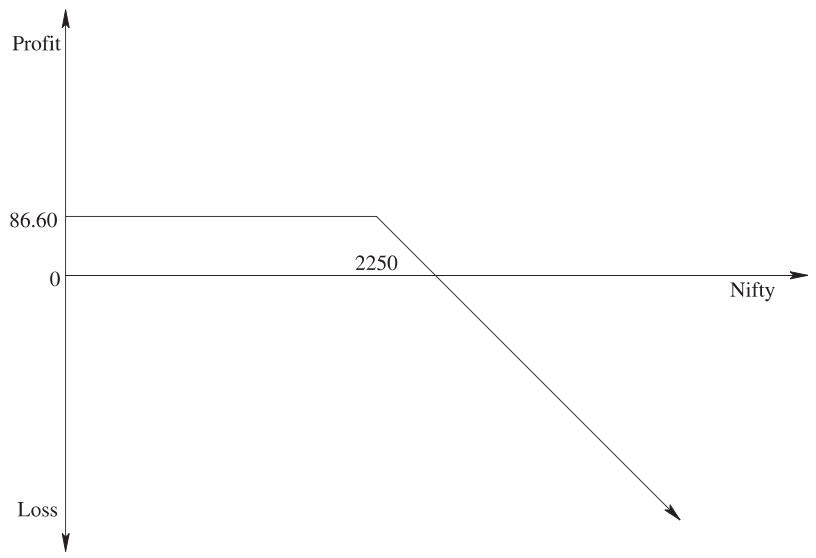

4.5.5 Payoff profile for buyer of put options: Long put

A put option gives the buyer the right to sell the underlying asset at the strike price specified in the option. The profit/loss that the buyer makes on the option depends on the spot price of the underlying. If upon expiration, the spot price is below the strike price, he makes a profit. Lower the spot price, more is the profit he makes. If the spot price of the underlying is higher than the strike price, he lets his option expire un-exercised. His loss in this case is the premium he paid for buying the option. Figure 4.7 gives the payoff for the buyer of a three month put option (often referred to as long put) with a strike of 2250 bought at a premium of 61.70.

4.5.6 Payoff profile for writer of put options: Short put

A put option gives the buyer the right to sell the underlying asset at the strike price specified in the option. For selling the option, the writer of the option charges a premium. The profit/loss that the buyer makes on the option depends on the spot price of the underlying. Whatever is the buyer's profit is the seller's loss. If upon expiration, the spot price happens to be below the strike price, the buyer will exercise the option on the writer. If upon expiration the spot price of the

Figure 4.7 Payoff for buyer of put option

The figure shows the profits/losses for the buyer of a three-month Nifty 2250 put option. As can be seen, as the spot Nifty falls, the put option is in-the-money. If upon expiration, Nifty closes below the strike of 2250, the buyer would exercise his option and profit to the extent of the difference between the strike price and Nifty-close. The profits possible on this option can be as high as the strike price. However if Nifty rises above the strike of 2250, he lets the option expire. His losses are limited to the extent of the premium he paid for buying the option.

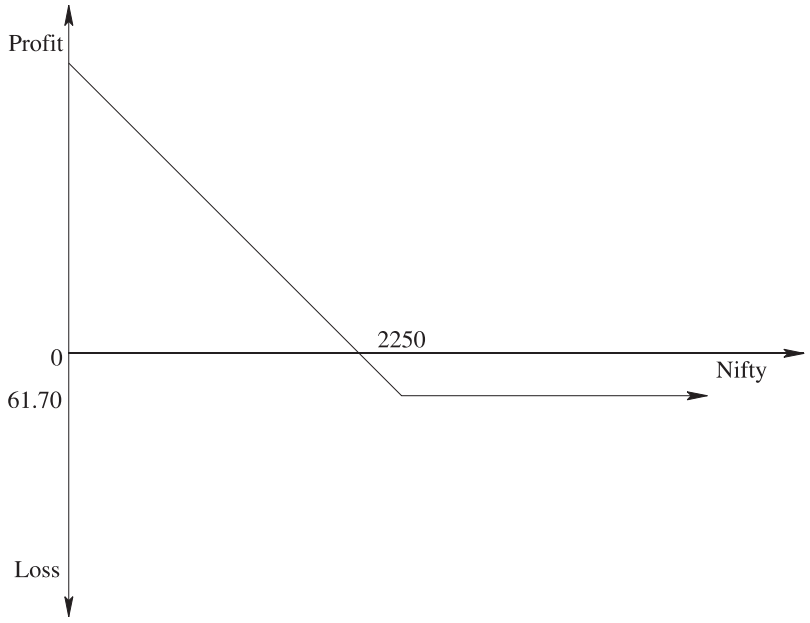

underlying is more than the strike price, the buyer lets his option expire un-exercised and the writer gets to keep the premium. Figure 4.8 gives the payoff for the writer of a three month put option (often referred to as short put) with a strike of 2250 sold at a premium of 61.70.

4.6 Pricing options

An option buyer has the right but not the obligation to exercise on the seller. The worst that can happen to a buyer is the loss of the premium paid by him. His downside is limited to this premium, but his upside is potentially unlimited. This optionality is precious and has a value, which is expressed in terms of the option price. Just like in other free markets, it is the supply and demand in the secondary market that drives the price of an option.

There are various models which help us get close to the true price of an option. Most of these are variants of the celebrated Black-Scholes model for pricing European options. Today most calculators and spread-sheets come with a built-in Black-Scholes options pricing formula so to price options we don't really need to memorize the formula. All we need to know is the variables

Figure 4.8 Payoff for writer of put option

The figure shows the profits/losses for the seller of a three-month Nifty 2250 put option. As the spot Nifty falls, the put option is in-the-money and the writer starts making losses . If upon expiration, Nifty closes below the strike of 2250, the buyer would exercise his option on the writer who would suffer a loss to the extent of the difference between the strike price and Nifty-close. The loss that can be incurred by the writer of the option is a maximum extent of the strike price(Since the worst that can happen is that the asset price can fall to zero) whereas the maximum profit is limited to the extent of the up-front option premium of Rs.61.70 charged by him.

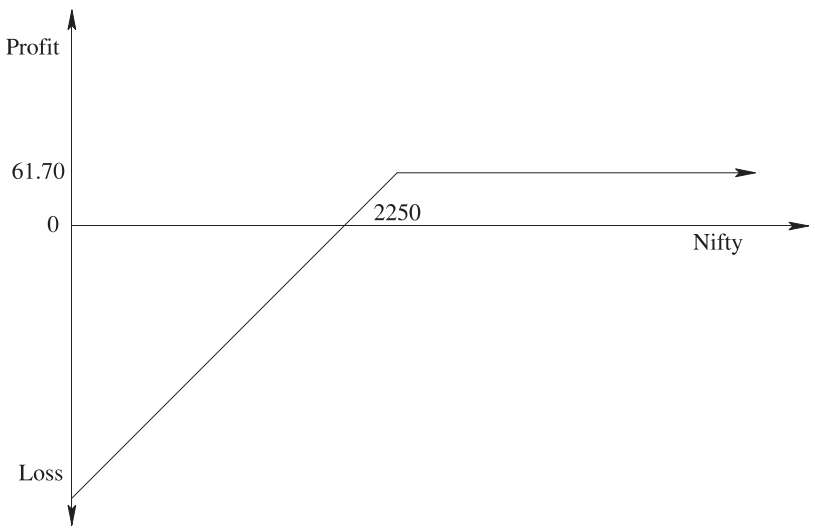

that go into the model.

The Black–Scholes formulas for the prices of European calls and puts on a non-dividend paying stock are:

$$
\begin{aligned}
C &= SN(d_1) - Xe^{-rT}N(d_2) \\
P &= Xe^{-rT}N(-d_2) - SN(-d_1) \\
\text{where } d_1 &= \frac{\ln \frac{S}{X} + (r + \sigma^2/2)T}{\sigma\sqrt{T}} \\
\text{and } d_2 &= d_1 - \sigma\sqrt{T}
\end{aligned}
$$

- The Black/Scholes equation is done in continuous time. This requires continuous compounding. The "r" that figures in this is $\ln(1 + r)$. Example: if the interest rate per annum is 12%, you need to use $\ln 1.12$ or 0.1133, which is the continuously compounded equivalent of 12% per annum.
- $N()$ is the cumulative normal distribution. $N(d_1)$ is called the delta of the option which is a measure of change in option price with respect to change in the price of the underlying asset.
- σ a measure of volatility, is the annualized standard deviation of continuously compounded returns on the underlying. When daily $sigma$ are given, they need to be converted into annualized $sigma$.

- $sigma_{annual} = sigma_{daily} \times \sqrt{\text{Number of trading days per year}}$. On an average there are 250 trading days in a year.
- X is the exercise price, S the spot price and T the time to expiration measured in years.

4.7 Application of options

We look here at some applications of options contracts. We refer to single stock options here. However since the index is nothing but a security whose price or level is a weighted average of securities constituiting the index, all strategies that can be implemented using stock futures can also be implemented using index options.

4.7.1 Hedging: Have underlying buy puts

Owners of stocks or equity portfolios often experience discomfort about the overall stock market movement. As an owner of stocks or an equity portfolio, sometimes you may have a view that stock prices will fall in the near future. At other times you may see that the market is in for a few days or weeks of massive volatility, and you do not have an appetite for this kind of volatility. The union budget is a common and reliable source of such volatility: market volatility is always enhanced for one week before and two weeks after a budget. Many investors simply do not want the fluctuations of these three weeks. One way to protect your portfolio from potential downside due to a market drop is to buy insurance using put options.

Index and stock options are a cheap and easily implementable way of seeking this insurance. The idea is simple. To protect the value of your portfolio from falling below a particular level, buy the right number of put options with the right strike price. If you are only concerned about the value of a particular stock that you hold, buy put options on that stock. If you are concerned about the overall portfolio, buy put options on the index.When the stock price falls your stock will lose value and the put options bought by you will gain, effectively ensuring that the total value of your stock plus put does not fall below a particular level. This level depends on the strike price of the stock options chosen by you. Similarly when the index falls, your portfolio will lose value and the put options bought by you will gain, effectively ensuring that the value of your portfolio does not fall below a particular level. This level depends on the strike price of the index options chosen by you.

Portfolio insurance using put options is of particular interest to mutual funds who already own well-diversified portfolios. By buying puts, the fund can limit its downside in case of a market fall.

4.7.2 Speculation: Bullish security, buy calls or sell puts

There are times when investors believe that security prices are going to rise. For instance, after a good budget, or good corporate results, or the onset of a stable government. How does one implement a trading strategy to benefit from an upward movement in the underlying security? Using options there are two ways one can do this:

1. Buy call options; or
2. Sell put options

We have already seen the payoff of a call option. The downside to the buyer of the call option is limited to the option premium he pays for buying the option. His upside however is potentially unlimited. Suppose you have a hunch that the price of a particular security is going to rise in a months time. Your hunch proves correct and the price does indeed rise, it is this upside that you cash in on. However, if your hunch proves to be wrong and the security price plunges down, what you lose is only the option premium.

Having decided to buy a call, which one should you buy? Table 4.1 gives the premia for one month calls and puts with different strikes. Given that there are a number of one–month calls trading, each with a different strike price, the obvious question is: which strike should you choose? Let us take a look at call options with different strike prices. Assume that the current price level is 1250, risk-free rate is 12% per year and volatility of the underlying security is 30%. The following options are available:

1. A one month call with a strike of 1200.
2. A one month call with a strike of 1225.
3. A one month call with a strike of 1250.
4. A one month call with a strike of 1275.
5. A one month call with a strike of 1300.

Which of these options you choose largely depends on how strongly you feel about the likelihood of the upward movement in the price, and how much you are willing to lose should this upward movement not come about. There are five one–month calls and five one–month puts trading in the market. The call with a strike of 1200 is deep in–the–money and hence trades at a higher premium. The call with a strike of 1275 is out–of–the–money and trades at a low premium. The call with a strike of 1300 is deep–out–of–money. Its execution depends on the unlikely event that the underlying will rise by more than 50 points on the expiration date. Hence buying this call is basically like buying a lottery. There is a small probability that it may be in–the–money by expiration, in which case the buyer will make profits. In the more likely event of the call expiring out–of–the–money, the buyer simply loses the small premium amount of Rs.27.50.

As a person who wants to speculate on the hunch that prices may rise, you can also do so by selling or writing puts. As the writer of puts, you face a limited upside and an unlimited downside. If prices do rise, the buyer of the put will let the option expire and you will earn the premium. If however your hunch about an upward movement proves to be wrong and prices actually fall, then your losses directly increase with the falling price level. If for instance the price of the underlying falls to 1230 and you've sold a put with an exercise of 1300, the buyer of the put will exercise the option and you'll end up losing Rs.70. Taking into account the premium earned by you when you sold the put, the net loss on the trade is Rs.5.20.

Having decided to write a put, which one should you write? Given that there are a number of one-month puts trading, each with a different strike price, the obvious question is: which strike

Table 4.1 One month calls and puts trading at different strikes

The spot price is 1250. There are five one-month calls and five one-month puts trading in the market. The call with a strike of 1200 is deep in-the-money and hence trades at a higher premium. The call with a strike of 1275 is out-of-the-money and trades at a low premium. The call with a strike of 1300 is deep-out-of-money. Its execution depends on the unlikely event that the price of underlying will rise by more than 50 points on the expiration date. Hence buying this call is basically like buying a lottery. There is a small probability that it may be in-the-money by expiration in which case the buyer will profit. In the more likely event of the call expiring out-of-the-money, the buyer simply loses the small premium amount of Rs. 27.50. Figure 4.9 shows the payoffs from buying calls at different strikes. Similarly, the put with a strike of 1300 is deep in-the-money and trades at a higher premium than the at-the-money put at a strike of 1250. The put with a strike of 1200 is deep out-of-the-money and will only be exercised in the unlikely event that underlying falls by 50 points on the expiration date.Figure 4.10 shows the payoffs from writing puts at different strikes.

Underlying	Strike price of option	Call Premium(Rs.)	Put Premium(Rs.)
1250	1200	80.10	18.15
1250	1225	63.65	26.50
1250	1250	49.45	37.00
1250	1275	37.50	49.80
1250	1300	27.50	64.80

should you choose ? This largely depends on how strongly you feel about the likelihood of the upward movement in the prices of the underlying. If you write an at–the–money put, the option premium earned by you will be higher than if you write an out–of–the–money put. However the chances of an at–the–money put being exercised on you are higher as well. In the example in Figure 4.10, at a price level of 1250, one option is in–the–money and one is out–of–the–money. As expected, the in–the–money option fetches the highest premium of Rs.64.80 whereas the out–of–the–money option has the lowest premium of Rs.18.15.

4.7.3 Speculation: Bearish security, sell calls or buy puts

Do you sometimes think that the market is going to drop? That you could make a profit by adopting a position on the market? Due to poor corporate results, or the instability of the government, many people feel that the stocks prices would go down. How does one implement a trading strategy to benefit from a downward movement in the market? Today, using options, you have two choices:

1. Sell call options; or
2. Buy put options

We have already seen the payoff of a call option. The upside to the writer of the call option is limited to the option premium he receives upright for writing the option. His downside however is potentially unlimited. Suppose you have a hunch that the price of a particular security is going to fall in a months time. Your hunch proves correct and it does indeed fall, it is this downside

Figure 4.9 Payoff for buyer of call options at various strikes

The figure shows the profits/losses for a buyer of calls at various strikes. The in–the–money option with a strike of 1200 has the highest premium of Rs.80.10 whereas the out–of–the–money option with a strike of 1300 has the lowest premium of Rs.27.50.

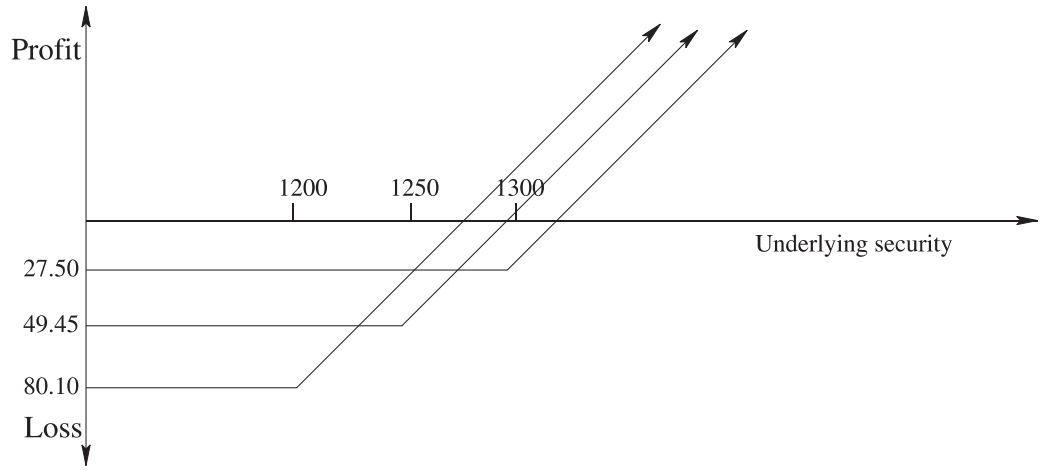

Figure 4.10 Payoff for writer of put options at various strikes

The figure shows the profits/losses for a writer of puts at various strikes. The in–the–money option with a strike of 1300 fetches the highest premium of Rs.64.80 whereas the out–of–the–money option with a strike of 1200 has the lowest premium of Rs.18.15.

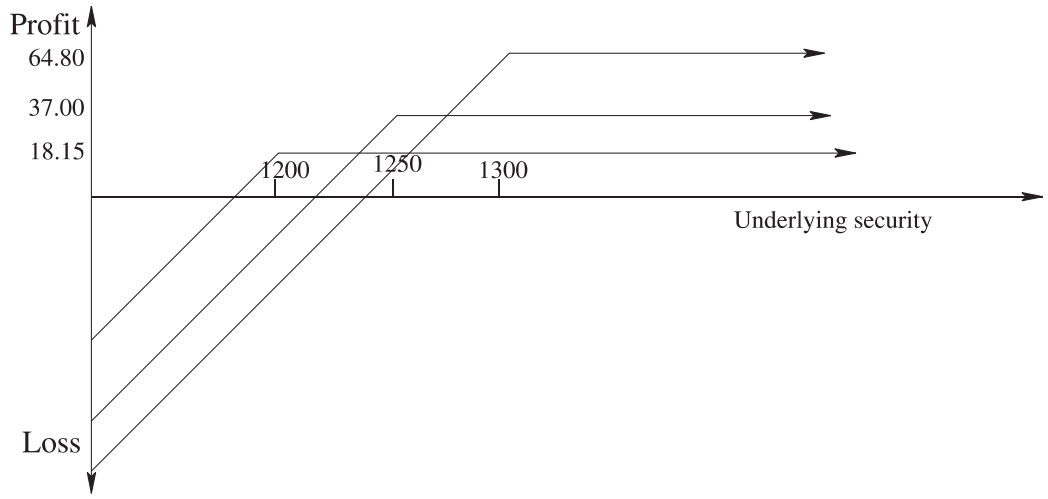

that you cash in on. When the price falls, the buyer of the call lets the call expire and you get to keep the premium. However, if your hunch proves to be wrong and the market soars up instead, what you lose is directly proportional to the rise in the price of the security.

Having decided to write a call, which one should you write? Table 4.2 gives the premiums for one month calls and puts with different strikes. Given that there are a number of one-month calls trading, each with a different strike price, the obvious question is: which strike should you choose ? Let us take a look at call options with different strike prices. Assume that the current stock price is 1250, risk-free rate is 12% per year and stock volatility is 30%. You could write the following options :

1. A one month call with a strike of 1200.
2. A one month call with a strike of 1225.
3. A one month call with a strike of 1250.
4. A one month call with a strike of 1275.
5. A one month call with a strike of 1300.

Which of this options you write largely depends on how strongly you feel about the likelihood of the downward movement of prices and how much you are willing to lose should this downward movement not come about. There are five one-month calls and five one-month puts trading in the market. The call with a strike of 1200 is deep in-the-money and hence trades at a higher premium. The call with a strike of 1275 is out-of-the-money and trades at a low premium. The call with a strike of 1300 is deep-out-of-money. Its execution depends on the unlikely event that the stock will rise by more than 50 points on the expiration date. Hence writing this call is a fairly safe bet. There is a small probability that it may be in-the-money by expiration in which case the buyer exercises and the writer suffers losses to the extent that the price is above 1300. In the more likely event of the call expiring out-of-the-money, the writer earns the premium amount of Rs.27.50.

As a person who wants to speculate on the hunch that the market may fall, you can also buy puts. As the buyer of puts you face an unlimited upside but a limited downside. If the price does fall, you profit to the extent the price falls below the strike of the put purchased by you. If however your hunch about a downward movement in the market proves to be wrong and the price actually rises, all you lose is the option premium. If for instance the security price rises to 1300 and you've bought a put with an exercise of 1250, you simply let the put expire. If however the price does fall to say 1225 on expiration date, you make a neat profit of Rs.25.

Having decided to buy a put, which one should you buy? Given that there are a number of one-month puts trading, each with a different strike price, the obvious question is: which strike should you choose? This largely depends on how strongly you feel about the likelihood of the downward movement in the market. If you buy an at-the-money put, the option premium paid by you will by higher than if you buy an out-of-the-money put. However the chances of an at-the-money put expiring in-the-money are higher as well.

Table 4.2 One month calls and puts trading at different strikes

The spot price is 1250. There are five one-month calls and five one-month puts trading in the market. The call with a strike of 1200 is deep in-the-money and hence trades at a higher premium. The call with a strike of 1275 is out-of-the-money and trades at a low premium. The call with a strike of 1300 is deep-out-of-money. Its execution depends on the unlikely event that the price will rise by more than 50 points on the expiration date. Hence writing this call is a fairly safe bet. There is a small probability that it may be in-the-money by expiration in which case the buyer exercises and the writer suffers losses to the extent that the price is above 1300. In the more likely event of the call expiring out-of-the-money, the writer earns the premium amount of Rs.27.50. Figure 4.11 shows the payoffs from writing calls at different strikes. Similarly, the put with a strike of 1300 is deep in-the-money and trades at a higher premium than the at-the-money put at a strike of 1250. The put with a strike of 1200 is deep out-of-the-money and will only be exercised in the unlikely event that the price falls by 50 points on the expiration date. The choice of which put to buy depends upon how much the speculator expects the market to fall. Figure 4.12 shows the payoffs from buying puts at different strikes.

Price	Strike price of option	Call Premium(Rs.)	Put Premium(Rs.)
1250	1200	80.10	18.15
1250	1225	63.65	26.50
1250	1250	49.45	37.00
1250	1275	37.50	49.80
1250	1300	27.50	64.80

Figure 4.11 Payoff for seller of call option at various strikes

The figure shows the profits/losses for a seller of calls at various strike prices. The in–the–money option has the highest premium of Rs.80.10 whereas the out–of–the–money option has the lowest premium of Rs.27.50.

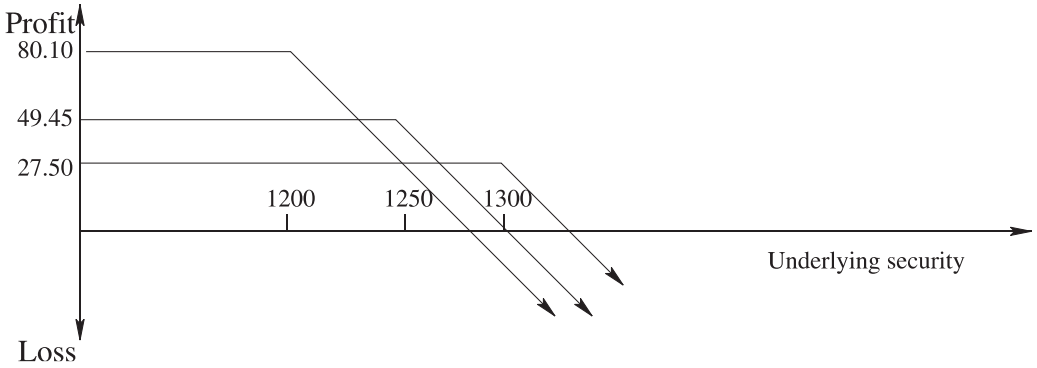

Solved Problems

Q: On 15th January Mr.Arvind Sethi bought a January Nifty futures contract which cost him Rs.240,000. Each Nifty futures contract is for delivery of 100 Nifties. On 25th January, the index closed at 2460. How much profit/loss did he make?

1. + 6000
2. - 4500
3. - 3000
4. + 2500

A: Mr.Sethi bought one futures contract costing him Rs.240,000. At a market lot of 100, this means he paid Rs.2400 per Nifty future. On the futures expiration day, the futures price converges to the spot price. If the index closed at 2460, this must be the futures close price as well. Hence he will have made of profit of (2460 - 2400)*100. The correct answer is number 1. ●●

Figure 4.12 Payoff for buyer of put options at various strikes

The figure shows the profits/losses for a buyer of puts at various strike prices. The in–the–money option has the highest premium of Rs.64.80 whereas the out–of–the–money option has the lowest premium of Rs.18.50.

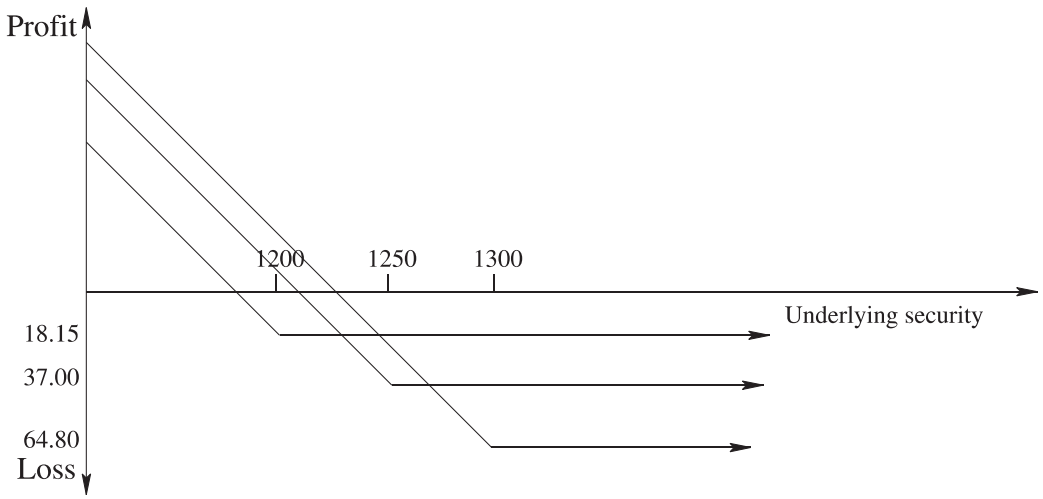

Q: Kantaben sold a January Nifty futures contract for Rs.240,000 on 15th January. Each Nifty futures contract is for delivery of 100 Nifties. On 25th January, the index closed at 2450. How much profit/loss did she make?

1. - 7,000
2. - 5,000
3. + 5,000
4. + 7,000

A: Kantaben sold one futures contract costing her Rs.240,000. At a market lot of 100, this works out to be Rs.2400 per Nifty future. On the futures expiration day, the futures price converges to the spot price. If the index closed at 2450, this must be the futures close price as well. Hence she will have made of loss of (2450 - 2400)*100. The correct answer is number 2. ••

Q: On 15th January Mr.Kajaria bought a January Nifty futures contract which cost him Rs.240,000. Each Nifty futures contract is for delivery of 100 Nifties. On 25th January, the index closed at 2360. How much profi t/loss did he make?

1. + 6000
2. - 4000
3. - 3000
4. + 2500

A: Mr.Kajaria bought one futures contract costing him Rs.240,000. At a market lot of 100, this means he paid Rs.2400 per Nifty future. On the futures expiration day, the futures price converges to the spot price. If the index closed at 2360, this must be the futures close price as well. Hence he will have made of loss of (2400 - 2360)*100. The correct answer is number 2. ●●

Q: Krishna Seth sold a January Nifty futures contract for Rs.240,000 on 15th January. Each Nifty futures contract is for delivery of 100 Nifties. On 25th January, the index closed at 2350. How much profi t/loss did she make?

1. - 7,000
2. - 5,000
3. + 5,000
4. + 7,000

A: Kantaben sold one futures contract costing her Rs.240,000. At a market lot of 100, this works out to be Rs.2400 per Nifty future. On the futures expiration day, the futures price converges to the spot price. If the index closed at 2350, this must be the futures close price as well. Hence she will have made of profi t of (2400 - 2350)*100. The correct answer is number 3. ●●

Q: A speculator with a bullish view on a security can _____

1. buy stock futures
2. buy index futures
3. sell stock futures
4. sell index futures

A: The correct answer is number 1. ●●

Q: Mohan owns a thousand shares of Reliance. Around budget time, he get uncomfortable with the price movements. Which of the following will give him the hedge he desires?

1. Buy 10 Reliance futures contracts
2. Sell 10 Reliance futures contracts
3. Buy 5 Reliance futures contracts
4. Sell 5 Reliance futures contracts

A: Since he owns a thousand shares of Reliance, he will have to sell 10 Reliance futures contracts(one contract has 100 underlying shares) to give him a complete hedge. Correct answer is number 2. ●●

Q: Santosh is bullish about Company XYZ and buys ten one-month XYZ futures contracts at Rs.2,96,000. On the last Thursday of the month, XYZ closes at Rs.271. He makes a _____

1. profi t of Rs.15000
2. profi t of Rs.25000
3. loss of Rs.15000
4. loss of Rs.25000

A: At Rs.2,96,000 per futures contract, it costs him Rs.296 per unit of futures,i.e. 2,96,000/(10 * 100). On expiration day the spot and futures converge. Therefore he makes a loss of (296 - 271) * 1000 = 25000. The correct answer is number 4. ●●

Q: Rajiv is bearish about Company ABC and sells twenty one-month ABC futures contracts at Rs.3.04,000. On the last Thursday of the month, ABC closes at Rs.134. He makes a _____

1. profi t of Rs.18000
2. profi t of Rs.36000
3. loss of Rs.18000
4. loss of Rs.36000

A: At Rs.3,04,000 per futures contract, it costs him Rs.152 per unit of futures,i.e. 3,04,000/(20 * 100). On expiration day the spot and futures converge. Therefore his profi t is (152 - 134) * 2000 = 36000. The correct answer is number 2. ●●

Q: Suppose the Company PQR trades at 1000 in the cash market and two month PQR futures trade at 1030. If transactions costs involved are 0.4%. What is the arbitrage return possible?

1. 1.8% per month
2. 1.3% per month
3. 2% per month
4. 1.1% per month

A: Return over two months is 1030/1000 = 3%. Minus transactions costs of 0.4% and the net return works out to be 2.6%. The return per month is 1.3%. The correct answer is number 2. ●●

Q: Anand is bullish about the index. Spot Nifty stands at 2200. He decides to buy one three-month Nifty call option contract with a strike of 2260 at a premium of Rs 15 per call. Three months later, the index closes at 2295. His payoff on the position is

1. Rs.4,000
2. Rs.9,000
3. Rs.2,000
4. None of the above

A: Each call option earns him (2295 - 2260 - 15)*100 = 20*100= Rs.2,000.The correct answer is number 4. ●●

Q: Chetan is bullish about the index. Spot Nifty stands at 2200. He decides to buy one three month Nifty call option contract with a strike of 2260 at Rs.60 a call. Three months later the index closes at 2240. His payoff on the position is

1. - 7,000
2. - 12,000
3. - 4,000
4. -6,000

A: The call expires out of the money, so he simply loses the call premium he paid, i.e 60 * 100 = Rs.6,000.The correct answer is number 4. ●●

Q: Deepak is bullish about the index. Spot Nifty stands at 2250. He decides to buy one three-month Nifty call option contract with a strike of 2290 at Rs.20 per call. Three months later the index closes at 2330. His payoff on the position is

1. Rs.7,000
2. Rs.2,000
3. Rs.4,000
4. None of the above

A: Each call option earns him (2330 - 2290 - 20)*100 = 20*100= Rs.2,000. The correct answer is number 2. ●●

Q: Satish is bullish about the index. Spot Nifty stands at 2225. He decides to buy one three-month Nifty call option contract with a strike of 2260 at Rs.20 a call. Three months later the index closes at 2235. His payoff on the position is

1. - 7,000
2. - 8,000
3. - 4,000
4. -2,000

A: The call expires out of the money, so he simply loses the call premium he paid, i.e 20 * 100 = Rs.2,000. The correct answer is number 4. ●●

Chapter 5

Trading

In this chapter we shall take a brief look at the trading system for NSE's futures and options market. However, the best way to get a feel of the trading system is to actually watch the screen and observe trading.

5.1 Futures and options trading system

The futures & options trading system of NSE, called NEAT-F&O trading system, provides a fully automated screen-based trading for Nifty futures & options and stock futures & options on a nationwide basis as well as an online monitoring and surveillance mechanism. It supports an order driven market and provides complete transparency of trading operations. It is similar to that of trading of equities in the cash market segment.

The software for the F&O market has been developed to facilitate efficient and transparent trading in futures and options instruments. Keeping in view the familiarity of trading members with the current capital market trading system, modifications have been performed in the existing capital market trading system so as to make it suitable for trading futures and options.

5.1.1 Entities in the trading system

There are four entities in the trading system. Trading members, clearing members, professional clearing members and participants.

1. *Trading members:* Trading members are members of NSE. They can trade either on their own account or on behalf of their clients including participants. The exchange assigns a trading member ID to each trading member. Each trading member can have more than one user. The number of users allowed for each trading member is notified by the exchange from time to time. Each user of a trading member must be registered with the exchange and is assigned an unique user ID. The unique trading member ID functions as a reference for all orders/trades of different users. This ID is common for all users of a particular trading member. It is the responsibility of the trading member to maintain adequate control over persons having access to the firm's User IDs.

2. *Clearing members:* Clearing members are members of NSCCL. They carry out risk management activities and confirmation/inquiry of trades through the trading system.

Figure 5.1 Market by price in NEAT F&O

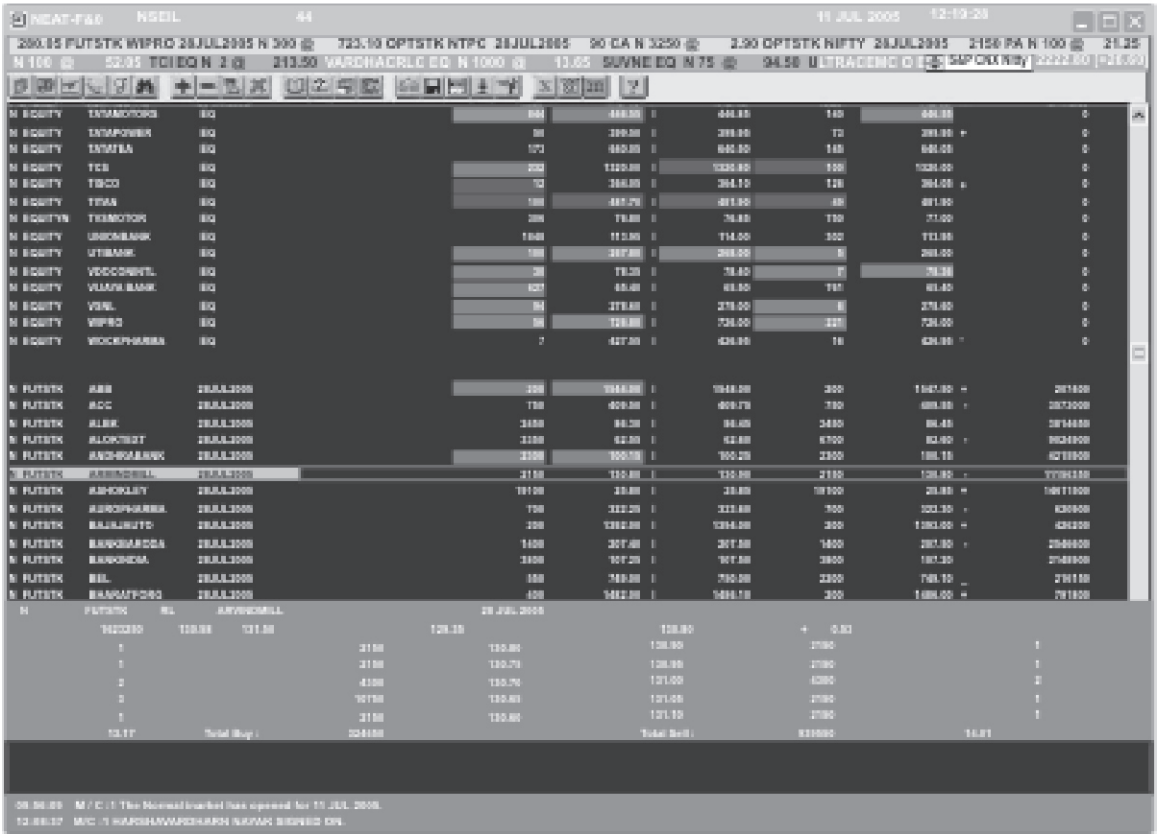

3. *Professional clearing members:* A professional clearing members is a clearing member who is not a trading member. Typically, banks and custodians become professional clearing members and clear and settle for their trading members.

4. *Participants:* A participant is a client of trading members like financial institutions. These clients may trade through multiple trading members but settle through a single clearing member.

5.1.2 Basis of trading

The NEAT F&O system supports an order driven market, wherein orders match automatically. Order matching is essentially on the basis of security, its price, time and quantity. All quantity fields are in units and price in rupees. The lot size on the futures market is for 100 Nifties. The exchange notifies the regular lot size and tick size for each of the contracts traded on this segment from time to time. When any order enters the trading system, it is an active order. It tries to find a match on the other side of the book. If it finds a match, a trade is generated. If it does not find a match, the order becomes passive and goes and sits in the respective outstanding order book in the system.

5.1.3 Corporate hierarchy

In the F&O trading software, a trading member has the facility of defining a hierarchy amongst users of the system. This hierarchy comprises corporate manager, branch manager and dealer.

1. *Corporate manager:* The term 'Corporate manager' is assigned to a user placed at the highest level in a trading firm. Such a user can perform all the functions such as order and trade h related activities, receiving reports for all branches of the trading member firm and also all dealers of the firm. Additionally, a corporate manager can define exposure limits for the branches of the firm. This facility is available only to the corporate manager.

2. *Branch manager:* The branch manager is a term assigned to a user who is placed under the corporate manager. Such a user can perform and view order and trade related activities for all dealers under that branch.

3. *Dealer:* Dealers are users at the lower most level of the hierarchy. A Dealer can perform view order and trade related activities only for oneself and does not have access to information on other dealers under either the same branch or other branches.

Below given cases explain activities possible for specific user categories:

1. *Clearing member corporate manager:* He can view outstanding orders, previous trades and net position of his client trading members by putting the TM ID (Trading member identification) and leaving the Branch ID and and Dealer ID blank.

2. *Clearing member and trading member corporate manager:* He can view

   (a) Outstanding orders, previous trades and net position of his client trading members by putting the TM ID and leaving the Branch ID and the Dealer ID blank.

   (b) Outstanding orders, previous trades and net positions entered for himself by entering his own TM ID, Branch ID and User ID. This is his default screen.

   (c) Outstanding orders, previous trades and net position entered for his branch by entering his TM ID and Branch ID fields

   (d) Outstanding orders,previous trades, and net positions entered for any of his users/dealers by entering his TM ID, Branch ID and user ID fields.

3. *Clearing member and trading member dealer:* He can only view requests entered by him.

4. *Trading member corporate manager:* He can view

   (a) Outstanding requests and activity log for requests entered by him by entering his own Branch and User IDs. This is his default screen.

   (b) Outstanding requests entered by his dealers and/or branch managers by either entering the Branch and/or User IDs or leaving them blank.

5. *Trading member branch manager:* He can view

   (a) Outstanding requests and activity log for requests entered by him by entering his own Branch and User IDs. This is his default screen.

(b) Outstanding requests entered by his users either by fi lling the User ID fi eld with a specifi c user or leaving the User ID fi eld blank.

6. *Trading member dealer:* He can only view requests entered by him.

5.1.4 Client broker relationship in derivative segment

A trading member must ensure compliance particularly with relation to the following while dealing with clients :

1. Filling of 'Know Your client' form
2. Execution of Client Broker agreement
3. Bring risk factors to the knowledge of client by getting acknowledgement of client on risk disclosure document
4. Timely execution of orders as per the instruction of clients in respective client codes.
5. Collection of adequate margins from the client
6. Maintaining separate client bank account for the segregation of client money.
7. Timely issue of contract notes as per the prescribed format to the client
8. Ensuring timely pay–in and pay–out of funds to and from the clients
9. Resolving complaint of clients if any at the earliest.
10. Avoiding receipt and payment of cash and deal only through account payee cheques
11. Sending the periodical statement of accounts to clients
12. Not charging excess brokerage
13. Maintaining unique client code as per the regulations.

5.1.5 Order types and conditions

The system allows the trading members to enter orders with various conditions attached to them as per their requirements. These conditions are broadly divided into the following categories:

- Time conditions
- Price conditions
- Other conditions

Several combinations of the above are allowed thereby providing enormous flexibility to the users. The order types and conditions are summarized below.

Figure 5.2 Security/contract/portfolio entry screen in NEAT F&O

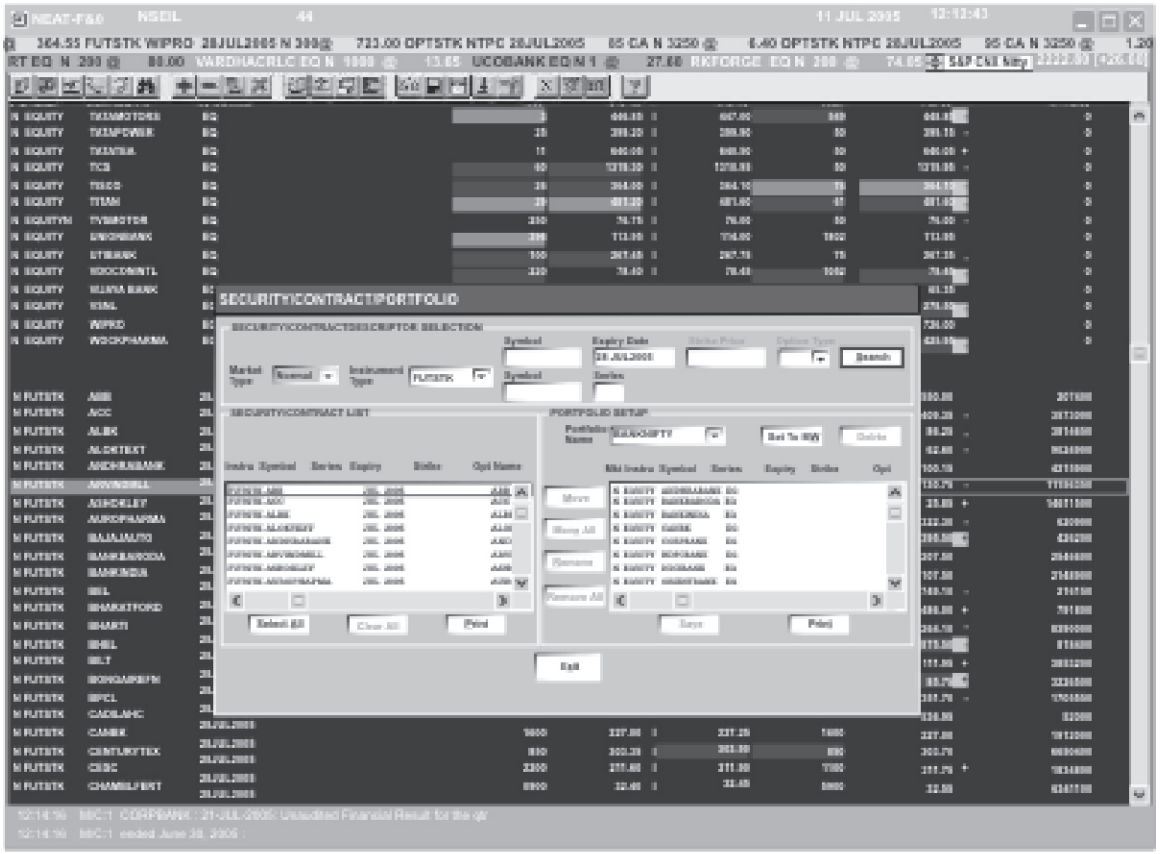

- **Time conditions**
  - *Day order:* A day order, as the name suggests is an order which is valid for the day on which it is entered. If the order is not executed during the day, the system cancels the order automatically at the end of the day.
  - *Immediate or Cancel(IOC):* An IOC order allows the user to buy or sell a contract as soon as the order is released into the system, failing which the order is cancelled from the system. Partial match is possible for the order, and the unmatched portion of the order is cancelled immediately.
- **Price condition**
  - *Stop–loss:* This facility allows the user to release an order into the system, after the market price of the security reaches or crosses a threshold price e.g. if for stop–loss buy order, the trigger is 1027.00, the limit price is 1030.00 and the market(last traded) price is 1023.00, then this order is released into the system once the market price reaches or exceeds 1027.00. This order is added to the regular lot book with time of triggering as the time stamp, as a limit order of 1030.00. For the stop–loss sell order, the trigger price has to be greater than the limit price.

- **Other conditions**
  - *Market price:* Market orders are orders for which no price is specifi ed at the time the order is entered (i.e. price is market price). For such orders, the system determines the price.
  - *Trigger price:* Price at which an order gets triggered from the stop–loss book.
  - *Limit price:* Price of the orders after triggering from stop–loss book.
  - *Pro:* Pro means that the orders are entered on the trading member's own account.
  - *Cli:* Cli means that the trading member enters the orders on behalf of a client.

5.2 The trader workstation

5.2.1 The market watch window

The following windows are displayed on the trader workstation screen.

- Title bar
- Ticker window of futures and options market
- Ticker window of underlying(capital) market
- Tool bar
- Market watch window
- Inquiry window
- Snap quote
- Order/trade window
- System message window

As mentioned earlier, the best way to familiarize oneself with the screen and its various segments is to actually spend some time studying a live screen. In this section we shall restrict ourselves to understanding just two segments of the workstation screen, the market watch window and the inquiry window.

The market watch window is the third window from the top of the screen which is always visible to the user. The purpose of market watch is to allow continuous monitoring of contracts or securities that are of specific interest to the user. It displays trading information for contracts selected by the user. The user also gets a broadcast of all the cash market securities on the screen. This function also will be available if the user selects the relevant securities for display on the market watch screen. Display of trading information related to cash market securities will be on "Read only " format,i.e. the dealer can only view the information on cash market but, cannot trade in them through the system. This is the main window from the dealer's perspective.

5.2.2 Inquiry window

The inquiry window enables the user to view information such as Market by Price(MBP), Previous Trades(PT), Outstanding Orders(OO), Activity log(AL), Snap Quote(SQ), Order Status(OS), Market Movement(MM), Market Inquiry(MI), Net Position, On line backup, Multiple index inquiry, Most active security and so on. Relevant information for the selected contract/security can be viewed. We shall look in detail at the Market by Price(MBP) and the Market Inquiry(MI) screens.

1. *Market by price(MBP):* The purpose of the MBP is to enable the user to view passive orders in the market aggregated at each price and are displayed in order of best prices. The window can be invoked by pressing the [F6] key. If a particular contract or security is selected, the details of the selected contract or security can be seen on this screen.

2. *Market inquiry(MI):* The market inquiry screen can be invoked by using the [F11] key. If a particular contract or security is selected, the details of the selected contract or selected security defaults in the selection screen or else the current position in the market watch defaults. The first line of the screen gives the Instrument type, symbol, expiry, contract status, total traded quantity, life time high and life time low. The second line displays the closing price, open price, high price, low price, last traded price and indicator for net change from closing price. The third line displays the last traded quantity, last traded time and the last traded date. The fourth line displays the closing open interest, the opening open interest, day high open interest, day low open interest, current open interest, life time high open interest, life time low open interest and net change from closing open interest. The fifth line display very important information, namely the carrying cost in percentage terms.

5.2.3 Placing orders on the trading system

For both the futures and the options market,while entering orders on the trading system, members are required to identify orders as being proprietary or client orders. Proprietary orders should be identified as 'Pro' and those of clients should be identified as 'Cli'. Apart from this, in the case of 'Cli' trades, the client account number should also be provided.

The futures market is a zero sum game i.e. the total number of long in any contract always equals the total number of short in any contract. The total number of outstanding contracts(long/short) at any point in time is called the "Open interest". This Open interest figure is a good indicator of the liquidity in every contract. Based on studies carried out in international exchanges, it is found that open interest is maximum in near month expiry contracts.

5.2.4 Market spread/combination order entry

The NEAT F&O trading system also enables to enter spread/combination trades. Figure 5.3 shows the spread/combination screen. This enables the user to input two or three orders simultaneously into the market. These orders will have the condition attached to it that unless and until the whole batch of orders finds a countermatch, they shall not be traded. This facilitates spread and combination trading strategies with minimum price risk.

Figure 5.3 Market spread/combination order entry

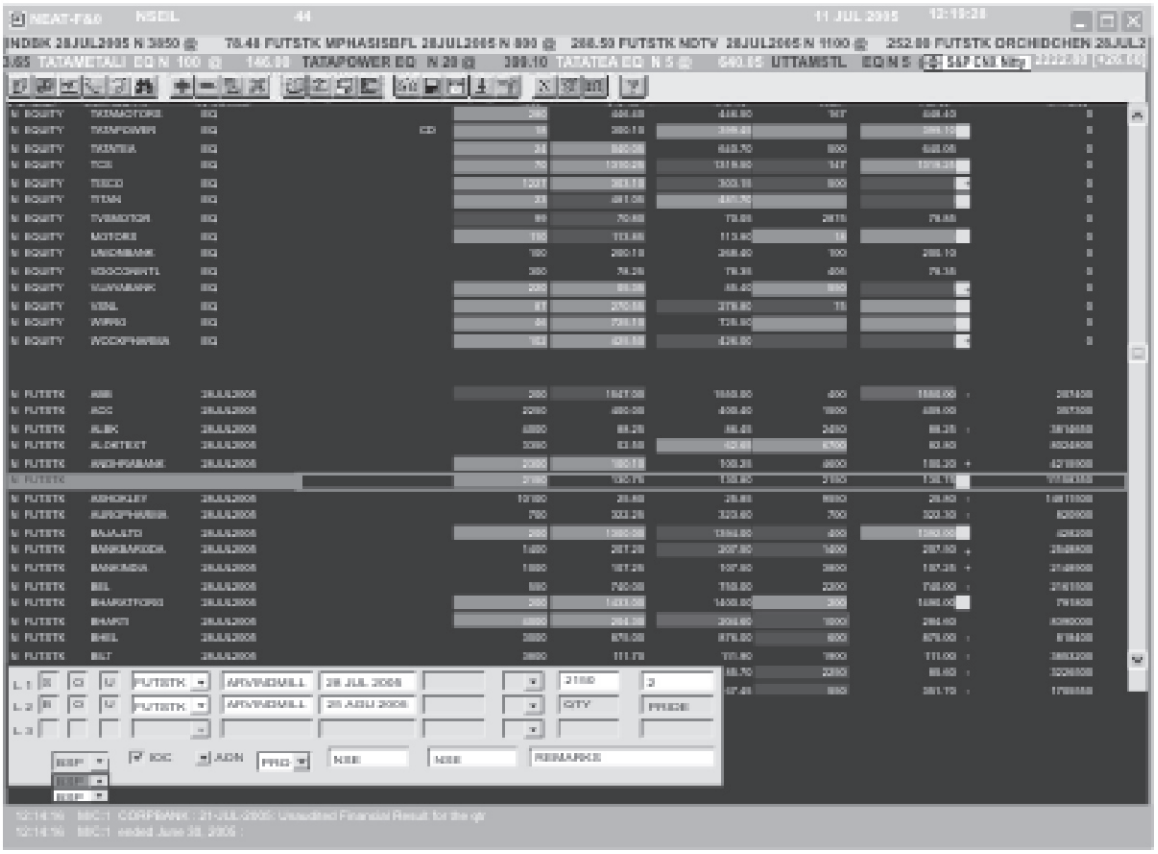

5.2.5 Basket trading

In order to provide a facility for easy arbitrage between futures and cash markets, NSE introduced basket-trading facility. Figure 5.4 shows the basket trading screen. This enables the generation of portfolio offline order files in the derivatives trading system and its execution in the cash segment. A trading member can buy or sell a portfolio through a single order, once he determines its size. The system automatically works out the quantity of each security to be bought or sold in proportion to their weights in the portfolio.

5.3 Futures and options market instruments

The F&O segment of NSE provides trading facilities for the following derivative instruments:

1. Index based futures
2. Index based options
3. Individual stock options

Figure 5.4 Portfolio offline order entry for basket trades

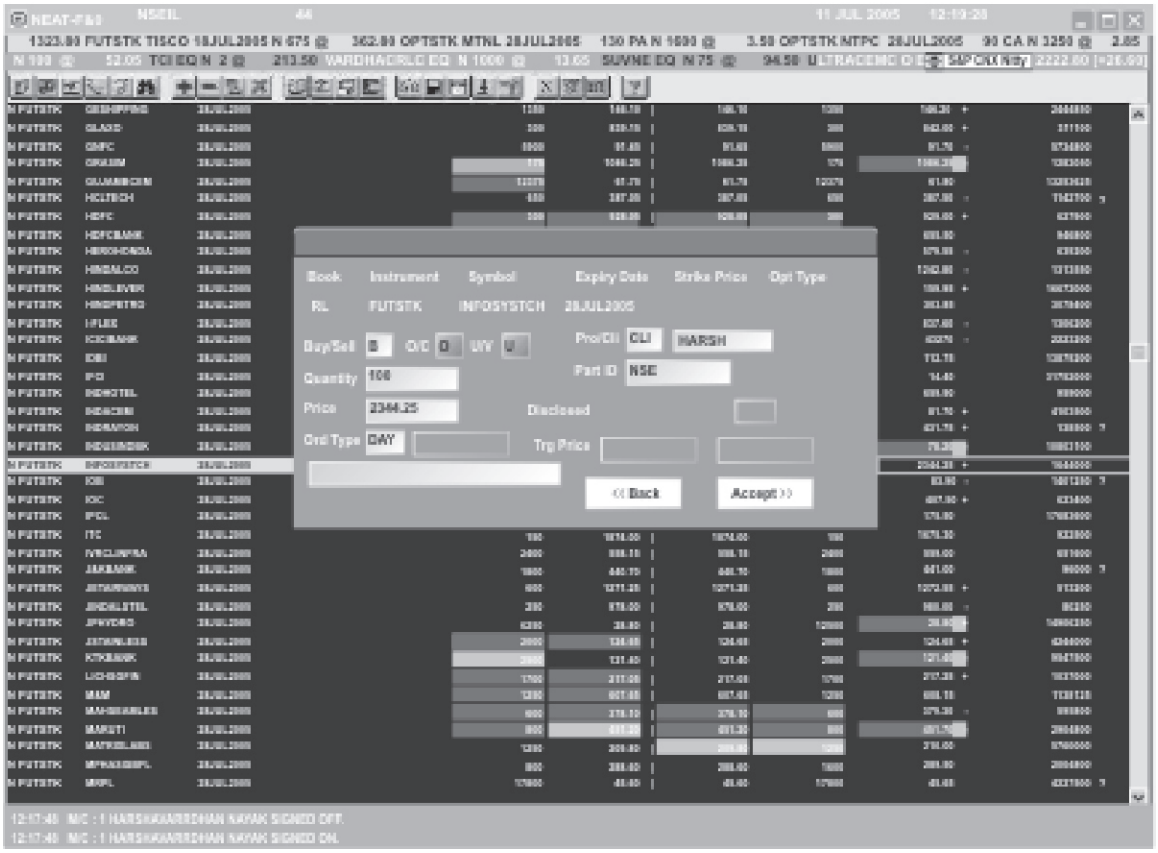

4. Individual stock futures

5.3.1 Contract specifications for index futures

NSE trades Nifty, CNX IT and BANK Nifty futures contracts having one-month, two-month and three-month expiry cycles. All contracts expire on the last Thursday of every month. Thus a January expiration contract would expire on the last Thursday of January and a February expiry contract would cease trading on the last Thursday of February. On the Friday following the last Thursday, a new contract having a three-month expiry would be introduced for trading. Thus, as shown in Figure 5.5 at any point in time, three contracts would be available for trading with the first contract expiring on the last Thursday of that month. Depending on the time period for which you want to take an exposure in index futures contracts, you can place buy and sell orders in the respective contracts. The Instrument type refers to "Futures contract on index" and Contract symbol - NIFTY denotes a "Futures contract on Nifty index" and the Expiry date represents the last date on which the contract will be available for trading. Each futures contract has a separate limit order book. All passive orders are stacked in the system in terms of price-

Figure 5.5 Contract cycle

The fi gure shows the contract cycle for futures contracts on NSE's derivatives market. As can be seen, at any given point of time, three contracts are available for trading – a near-month, a middle-month and a far-month. As the January contract expires on the last Thursday of the month, a new three-month contract starts trading from the following day, once more making available three index futures contracts for trading.

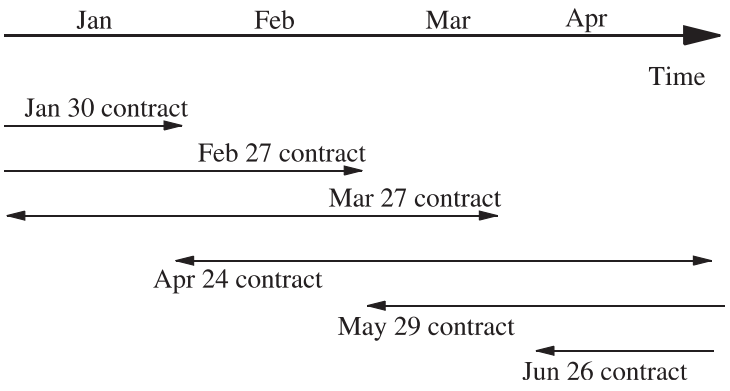

time priority and trades take place at the passive order price(similar to the existing capital market trading system). The best buy order for a given futures contract will be the order to buy the index at the highest index level whereas the best sell order will be the order to sell the index at the lowest index level.

Trading is for a minimum lot size of 100 units. Thus if the index level is around 2000, then the appropriate value of a single index futures contract would be Rs.200,000. The minimum tick size for an index future contract is 0.05 units. Thus a single move in the index value would imply a resultant gain or loss of Rs.5.00(i.e. 0.05*100 units) on an open position of 100 units.

Table 5.1 to Table 5.3 gives the contract specifications for index futures trading on the NSE.

5.3.2 Contract specification for index options

On NSE's index options market, contracts at different strikes, having one-month, two-month and three-month expiry cycles are available for trading. There are typically one-month, two-month and three-month options, each with minimum seven different strikes available for trading. Hence at a given point in time there are minimum $3 \times 7 \times 2$ or 42 options products. Option contracts are specified as follows: DATE-EXPIRYMONTH-YEAR-CALL/PUT-AMERICAN/EUROPEAN-STRIKE. For example the European style call option contract on the Nifty index with a strike price of 2040 expiring on the 30th June 2005 is specified as '30 JUN 2005 2040 CE'.

Just as in the case of futures contracts, each option product(for instance, the 28 JUN 2005 2040 CE) has it's own order book and it's own prices. All index options contracts are cash settled and expire on the last Thursday of the month. The clearing corporation does the novation. Just as in the case of futures, trading is in minimum market lot size of 100 units. The minimum tick for

Table 5.1 Contract specification: S&P CNX Nifty Futures

Underlying index	S&P CNX Nifty
Exchange of trading	National Stock Exchange of India Limited
Security descriptor	N FUTIDX NIFTY
Contract size	Permitted lot size shall be 100 (minimum value Rs.2 lakh)
Price steps	Re. 0.05
Price bands	Not applicable
Trading cycle	The futures contracts will have a maximum of three month trading cycle - the near month(one), the next month(two) and the far month(three). New contract will be introduced on the next trading day following the expiry of near month contract.
Expiry day	The last Thursday of the expiry month or the previous trading day if the last Thursday is a trading holiday.
Settlement basis	Mark to market and fi nal settlement will be cash settled on T+1 basis.
Settlement price	Daily settlement price will be the closing price of the futures contracts for the trading day and the fi nal settlement price shall be the closing value of the underlying index on the last trading day.

Table 5.2 Contract specification: CNX IT Futures

Underlying index	CNX IT
Exchange of trading	National Stock Exchange of India Limited
Security descriptor	N FUTIDX CNXIT
Contract size	Permitted lot size shall be 100 (minimum value Rs.2 lakh)
Price steps	Re. 0.05
Price bands	Not applicable
Trading cycle	The futures contracts will have a maximum of three month trading cycle - the near month(one), the next month(two) and the far month(three). New contract will be introduced on the next trading day following the expiry of near month contract.
Expiry day	The last Thursday of the expiry month or the previous trading day if the last Thursday is a trading holiday.
Settlement basis	Mark to market and fi nal settlement will be cash settled on T+1 basis.
Settlement price	Daily settlement price will be the closing price of the futures contracts for the trading day and the fi nal settlement price shall be the closing value of the underlying index on the last trading day.

Table 5.3 Contract specification: BANK Nifty Futures

Underlying index	CNX Bank
Exchange of trading	National Stock Exchange of India Limited
Security descriptor	N FUTIDX BANKNIFTY
Contract size	Permitted lot size shall be 100 (minimum value Rs.2 lakh)
Price steps	Re. 0.05
Price bands	Not applicable
Trading cycle	The futures contracts will have a maximum of three month trading cycle - the near month(one), the next month(two) and the far month(three). New contract will be introduced on the next trading day following the expiry of near month contract.
Expiry day	The last Thursday of the expiry month or the previous trading day if the last Thursday is a trading holiday.
Settlement basis	Mark to market and fi nal settlement will be cash settled on T+1 basis.
Settlement price	Daily settlement price will be the closing price of the futures contracts for the trading day and the fi nal settlement price shall be the closing value of the underlying index on the last trading day.

an index options contract is 0.05 paise. Table 5.4 to Table 5.6 gives the contract specifications for index options trading on the NSE.

Generation of strikes

The exchange has a policy of introducing strike prices and determining the strike price intervals. Table 5.7 and Table 5.8 summarises the policy for introducing strike prices and determining the strike price interval for stocks and index.

Let us look at an example of how the various option strikes are generated by the exchange.

- Suppose we start with Nifty at 2000 and options with strikes 2070, 2060, 2050, 2040, 2030, 2020, 2010, 2000, 1990, 1980, 1970, 1960, 1950, 1940, 1930.
- The exchange commits itself to an inter–strike distance of say 10.
- When the Nifty closing price crosses 2070, a new set of 7 out of the money (OTM) strikes start trading from the next day.
- When the Nifty closing price falls below 1930, a new set of 7 in the money (ITM) strikes start trading from the next day.

Table 5.4 Contract specification: S&P CNX Nifty Options

Underlying index	S&P CNX Nifty
Exchange of trading	National Stock Exchange of India Limited
Security descriptor	N OPTIDX NIFTY
Contract size	Permitted lot size shall be 100 (minimum value Rs.2 lakh)
Price steps	Re. 0.05
Price bands	Not applicable
Trading cycle	The options contracts will have a maximum of three month trading cycle - the near month(one), the next month(two) and the far month(three). New contract will be introduced on the next trading day following the expiry of near month contract.
Expiry day	The last Thursday of the expiry month or the previous trading day if the last Thursday is a trading holiday.
Settlement basis	Cash settlement on T+1 basis.
Style of option	European.
Strike price interval	Rs.10
Daily settlement price	Premium value(net)
Final settlement price	Closing value of the index on the last trading day.

Table 5.5 Contract specification: CNX IT Options

Underlying index	CNX IT
Exchange of trading	National Stock Exchange of India Limited
Security descriptor	N OPTIDX CNX IT
Contract size	Permitted lot size shall be 100 (minimum value Rs.2 lakh)
Price steps	Re. 0.05
Price bands	Not applicable
Trading cycle	The options contracts will have a maximum of three month trading cycle - the near month(one), the next month(two) and the far month(three). New contract will be introduced on the next trading day following the expiry of near month contract.
Expiry day	The last Thursday of the expiry month or the previous trading day if the last Thursday is a trading holiday.
Settlement basis	Cash settlement on T+1 basis.
Style of option	European.
Strike price interval	Rs.10
Daily settlement price	Premium value(net)
Final settlement price	Closing value of the index on the last trading day.

Table 5.6 Contract specification: BANK Nifty Options

Underlying index	CNX Bank
Exchange of trading	National Stock Exchange of India Limited
Security descriptor	N OPTIDX BANKNIFTY
Contract size	Permitted lot size shall be 100 (minimum value Rs.2 lakh)
Price steps	Re. 0.05
Price bands	Not applicable
Trading cycle	The options contracts will have a maximum of three month trading cycle - the near month(one), the next month(two) and the far month(three). New contract will be introduced on the next trading day following the expiry of near month contract.
Expiry day	The last Thursday of the expiry month or the previous trading day if the last Thursday is a trading holiday.
Settlement basis	Cash settlement on T+1 basis.
Style of option	European.
Strike price interval	Rs.10
Daily settlement price	Premium value(net)
Final settlement price	Closing value of the index on the last trading day.

Table 5.7 Generation of strikes for stock options

Price of underlying	Strike price interval	Scheme of strikes to be introduced (ITM–ATM–OTM)
Less than or equal to Rs.50	2.5	3–1–3
> Rs.50 – Rs.250	5	3–1–3
> Rs.250 – Rs.500	10	3–1–3
> Rs.500 – Rs.1000	20	3–1–3
> Rs.1000 – Rs.2500	30	3–1–3
> Rs.2500	50	3–1–3

5.3.3 Contract specifications for stock futures

Trading in stock futures commenced on the NSE from November 2001. These contracts are cash settled on a T+1 basis. The expiration cycle for stock futures is the same as for index futures,index options and stock options. A new contract is introduced on the trading day following the expiry of the near month contract. Table 5.9 gives the contract specifications for stock futures.

Table 5.8 Generation of strikes for Nifty options

Nifty index level	Strike interval	Scheme of strikes to be introduced (ITM–ATM–OTM)
Upto 1500	10	3–1–3
> 1500 upto 2000	10	5–1–5
> 2000 upto 2500	10	7–1–7
> 2500	10	9–1–9

Table 5.9 Contract specification: Stock futures

Underlying	Individual securities
Exchange of trading	National Stock Exchange of India Limited
Security descriptor	N FUTSTK ____
Contract size	As specified by the exchange (minimum value of Rs.2 lakh)
Price steps	Re. 0.05
Price bands	Not applicable
Trading cycle	The futures contracts will have a maximum of three month trading cycle - the near month(one), the next month(two) and the far month(three). New contract will be introduced on the next trading day following the expiry of near month contract.
Expiry day	The last Thursday of the expiry month or the previous trading day if the last Thursday is a trading holiday.
Settlement basis	Mark to market and final settlement will be cash settled on T+1 basis.
Settlement price	Daily settlement price will be the closing price of the futures contracts for the trading day and the final settlement price shall be the closing price of the underlying security on the last trading day.

5.3.4 Contract specifications for stock options

Trading in stock options commenced on the NSE from July 2001. These contracts are American style and are settled in cash. The expiration cycle for stock options is the same as for index futures and index options. A new contract is introduced on the trading day following the expiry of the near month contract. NSE provides a minimum of seven strike prices for every option type(i.e. call and put) during the trading month. There are at least three in–the–money contracts, three out–of–the–money contracts and one at–the–money contract available for trading. Table 5.10 gives the contract specifications for stock options.

Table 5.10 Contract specification: Stock options

Underlying	Individual securities available for trading in cash market
Exchange of trading	National Stock Exchange of India Limited
Security descriptor	N OPTSTK ____
Style of option	American.
Strike price interval	As specifi ed by the exchange
Contract size	As specifi ed by the exchange (minimum value of Rs.2 lakh)
Price steps	Re. 0.05
Price bands	Not applicable
Trading cycle	The options contracts will have a maximum of three month trading cycle - the near month(one), the next month(two) and the far month(three). New contract will be introduced on the next trading day following the expiry of near month contract.
Expiry day	The last Thursday of the expiry month or the previous trading day if the last Thursday is a trading holiday.
Settlement basis	Daily settlement on T+1 basis and fi nal option exercise settlement on T+3 basis
Daily settlement price	Premium value(net)
Final settlement price	Closing price of underlying on exercise day or expiry day
Settlement day	Last trading day

5.4 Criteria for stocks and index eligibility for trading

5.4.1 Eligibility criteria of stocks

- The stock is chosen from amongst the top 500 stocks in terms of average daily market capitalisation and average daily traded value in the previous six months on a rolling basis.
- The stock's median quarter–sigma order size over the last six months should be not less than Rs. 1 lakh. For this purpose, a stock's quarter–sigma order size should mean the order size (in value terms) required to cause a change in the stock price equal to one–quarter of a standard deviation.
- The market wide position limit in the stock should not be less than Rs.50 crore. The market wide position limit (number of shares) is valued taking the closing prices of stocks in the underlying cash market on the date of expiry of contract in the month. The market wide position limit of open position (in terms of the number of underlying stock) on futures and option contracts on a particular underlying stock should be lower of :
  - 30 times the average number of shares traded daily, during the previous calendar month, in the relevant underlying security in the underlying segment, or
  - 20% of the number of shares held by non–promoters in the relevant underlying security i.e. free–fbat holding.

- If an existing security fails to meet the eligibility criteria for three months consecutively, then no fresh month contract will be issued on that security.
- However, the existing unexpired contracts can be permitted to trade till expiry and new strikes can also be introduced in the existing contract months.

For unlisted companies coming out with initial public offering, if the net public offer is Rs.500 crores or more, then the exchange may consider introducing stock options and stock futures on such stocks at the time of its listing in the cash market.

5.4.2 Eligibility criteria of indices

The exchange may consider introducing derivative contracts on an index if the stocks contributing to 80% weightage of the index are individually eligible for derivative trading. However, no single ineligible stocks in the index should have a weightage of more than 5% in the index. The above criteria is applied every month, if the index fails to meet the eligibility criteria for three months consecutively, then no fresh month contract would be issued on that index, However, the existing unexpired contacts will be permitted to trade till expiry and new strikes can also be introduced in the existing contracts.

5.5 Charges

The maximum brokerage chargeable by a trading member in relation to trades effected in the contracts admitted to dealing on the F&O segment of NSE is fixed at 2.5% of the contract value in case of index futures and stock futures. In case of index options and stock options it is 2.5% of notional value of the contract [(Strike Price + Premium) * Quantity)], exclusive of statutory levies. The transaction charges payable to the exchange by the trading member for the trades executed by him on the F&O segment are fixed at the rate of Rs. 2 per lakh of turnover (0.002%) subject to a minimum of Rs.1,00,000 per year. However for the transactions in the options sub–segment the transaction charges are levied on the premium value at the rate of 0.05% (each side) instead of on the strike price as levied earlier. Further to this, trading members have been advised to charge brokerage from their clients on the Premium price(traded price) rather than Strike price. The trading members contribute to Investor Protection Fund of F&O segment at the rate of Rs. 10 per crore of turnover (0.0001%).

Solved problems

Q: The best buy order for a given futures contract is the order to buy the index at the

1. Highest price
2. Average of the highest and lowest price
3. Lowest price
4. None of the above

A: The best buy order for a given futures contract is the order to buy the index at the highest price whereas the best sell order is the order to sell the index at the lowest price. The correct answer is number 1. ••

Q: The F&O segment of NSE provides trading facilities for the following derivative instruments:

1. Index based futures
2. Index based options
3. Individual stock options
4. All the above

A: The F&O segment of NSE provides trading facilities for index based futures, index based options, individual stock options and individual stock futures. The correct answer is number 4. ●●

Q: At any given time, the F&O segment of NSE provides trading facilities for _____ Nifty futures contracts.

1. Two
2. Three
3. Nine
4. None of the above

A: At any given time NSE trades three Nifty futures contracts having one–month, two–month and three–month expiry cycles. The correct answer is number 2. ●●

Q: The maximum brokerage chargeable by a trading member in relation to trades effected in the contracts on the F&O segment of NSE is fi xed at _____ of the contract value, exclusive of statutory levies.

1. 1.5%
2. 1%
3. 2.0%
4. 2.5%

A: The correct answer is number 4. ●●

Q: All futures and options contracts expire on the

1. Last Friday of the month
2. Last Thursday of the month
3. Last Tuesday of the month
4. None of the above

A: All futures and options contracts expire on the last Thursday of the month. The correct answer is number 2. ●●

Q: The NEAT-F&O trading system supports an

1. Order driven market
2. Price driven market
3. Demand driven market
4. None of the above

A: The NEAT-F&O trading system supports an order driven market. The correct answer is number 1. ●●

Q: On the NSE's NEAT-F&O system, matching of trades takes place at the

1. Active order price
2. Passive order price
3. Market price
4. None of the above

A: All passive orders will be stacked in the system in terms of price-time priority and trades will take place at the passive order price(similar to the existing capital market trading system). The correct answer is number 2. ••

Q: On 26th January, the Nifty index stands at 2250. The value of a single index futures contract is

1. Rs.225,000
2. Rs.250,000
3. Rs.450,000
4. Rs.200,000

A: Futures trading is for a minimum lot size of 100 units. Thus if the index level is around 2250, then the appropriate value of a single index futures contract would be Rs.225,000. The correct answer is number 1. ••

Q: All options contracts expire on the

1. Last Friday of the month
2. Last Thursday of the month
3. Last Tuesday of the month
4. None of the above

A: All options contracts will expire on the last Thursday of the month. The correct answer is number 2. ••

Q: New options contracts are introduced on the

1. First trading day of the month
2. Last Thursday of the month
3. Last Wednesday of the month
4. On the next trading day following the expiry of near month contract.

A: New options contracts are introduced on the next trading day following the expiry of near month contract. The correct answer is number 4. ••

Q: The unique trading member ID is

1. Common for all users of a particular trading member.
2. Different for all users of a particular trading member.

A: Each user of a trading member must be registered with the exchange and is assigned an unique user ID. The unique trading member ID functions as a reference for all orders/trades of different users. This ID is common for all users of a particular trading member. The correct answer is number 1. ••

Q: A Corporate manager can

1. Perform order and trade related activities
2. Receive reports for all branches of the trading member fi rm
3. Receive reports for all dealers of the fi rm
4. Can defi ne exposure limits for the branches of the fi rm.
5. All of the above

A: The correct answer is number 5. ••

Q: A dealer can view

1. Outstanding orders, previous trades and net position of the trading member.
2. Requests entered by him.
3. Outstanding orders, previous trades and net position entered for his branch.
4. None of the above

A: The correct answer is number 2 ••

Chapter 6

Clearing and settlement

National Securities Clearing Corporation Limited (NSCCL) undertakes clearing and settlement of all trades executed on the futures and options (F&O) segment of the NSE. It also acts as legal counterparty to all trades on the F&O segment and guarantees their financial settlement.

6.1 Clearing entities

Clearing and settlement activities in the F&O segment are undertaken by NSCCL with the help of the following entities:

6.1.1 Clearing members

In the F&O segment, some members, called self clearing members, clear and settle their trades executed by them only either on their own account or on account of their clients. Some others, called trading member–cum–clearing member, clear and settle their own trades as well as trades of other trading members(TMs). Besides, there is a special category of members, called professional clearing members (PCM) who clear and settle trades executed by TMs. The members clearing their own trades and trades of others, and the PCMs are required to bring in additional security deposits in respect of every TM whose trades they undertake to clear and settle.

6.1.2 Clearing banks

Funds settlement takes place through clearing banks. For the purpose of settlement all clearing members are required to open a separate bank account with NSCCL designated clearing bank for F&O segment. The Clearing and Settlement process comprises of the following three main activities:

1. Clearing
2. Settlement

Table 6.1 Proprietary position of trading member Madanbhai on Day 1

Trading member Madanbhai trades in the futures and options segment for himself and two of his clients. The table shows his proprietary position. Note: A buy position "200@1000" means 200 units bought at the rate of Rs.1000.

Trading member Madanbhai		
	Buy	Sell
Proprietary position	200@1000	400@1010

Table 6.2 Client position of trading member Madanbhai on Day 1

Trading member Madanbhai trades in the futures and options segment for himself and two of his clients. The table shows his client position.

Trading member Madanbhai				
	Buy Open	Sell Close	Sell Open	Buy Close
Client position				
Client A	400@1109	200@1000		
Client B			600@1100	200@1099

3. Risk Management

6.2 Clearing mechanism

The clearing mechanism essentially involves working out open positions and obligations of clearing (self-clearing/trading-cum-clearing/professional clearing) members. This position is considered for exposure and daily margin purposes. The open positions of CMs are arrived at by aggregating the open positions of all the TMs and all custodial participants clearing through him, in contracts in which they have traded. A TM's open position is arrived at as the summation of his proprietary open position and clients' open positions, in the contracts in which he has traded. While entering orders on the trading system, TMs are required to identify the orders, whether proprietary (if they are their own trades) or client (if entered on behalf of clients) through 'Pro/Cli' indicator provided in the order entry screen. Proprietary positions are calculated on net basis(buy - sell) for each contract. Clients' positions are arrived at by summing together net (buy - sell) positions of each individual client. A TM's open position is the sum of proprietary open position, client open long position and client open short position.

Consider the following example given from Table 6.1 to Table 6.4. The proprietary open position on day 1 is simply = Buy - Sell = 200 - 400 = 200 short. The open position for client A = Buy(O) - Sell(C) = 400 - 200 = 200 long, i.e. he has a long position of 200 units. The open position for Client B = Sell(O) - Buy(C) = 600 - 200 = 400 short, i.e. he has a short position

Table 6.3 Proprietary position of trading member Madanbhai on Day 2

Assume that the position on Day 1 is carried forward to the next trading day and the following trades are also executed.

Trading member Madanbhai		
	Buy	Sell
Proprietary position	200@1000	400@1010

Table 6.4 Client position of trading member Madanbhai on Day 2

Trading member Madanbhai trades in the futures and options segment for himself and two of his clients. The table shows his client position on Day 2.

Trading member Madanbhai				
	Buy Open	Sell Close	Sell Open	Buy Close
Client position				
Client A	400@1109	200@1000		
Client B			600@1100	400@1099

of 400 units. Now the total open position of the trading member Madanbhai at end of day 1 is 200(his proprietary open position on net basis) plus 600(the Client open positions on gross basis), i.e. 800.

The proprietary open position at end of day 1 is 200 short. The end of day open position for proprietary trades undertaken on day 2 is 200 short. Hence the net open proprietary position at the end of day 2 is 400 short. Similarly, Client A's open position at the end of day 1 is 200 long. The end of day open position for trades done by Client A on day 2 is 200 long. Hence the net open position for Client A at the end of day 2 is 400 long. Client B's open position at the end of day 1 is 400 short. The end of day open position for trades done by Client B on day 2 is 200 short. Hence the net open position for Client B at the end of day 2 is 600 short. The net open position for the trading member at the end of day 2 is sum of the proprietary open position and client open positions. It works out to be 400 + 400 + 600, i.e. 1400.

The following table illustrates determination of open position of a CM, who clears for two TMs having two clients.

6.3 Settlement mechanism

All futures and options contracts are cash settled, i.e. through exchange of cash. The underlying for index futures/options of the Nifty index cannot be delivered. These contracts, therefore, have to be settled in cash. Futures and options on individual securities can be delivered as in the spot

Table 6.5 Determination of open position of a clearing member

TMs clearing through CM	Proprietary trades			Trades: Client 1			Trades: Client 2			Open position	
	Buy	Sell	Net	Buy	Sell	Net	Buy	Sell	Net	Long	Short
ABC	4000	2000	2000	3000	1000	2000	4000	2000	2000	6000	-
PQR	2000	3000	(1000)	2000	1000	1000	1000	2000	(1000)	1000	2000
Total	6000	5000	+2000 -1000	5000	2000	+3000	5000	4000	+2000 -1000	7000	2000

market. However, it has been currently mandated that stock options and futures would also be cash settled. The settlement amount for a CM is netted across all their TMs/clients, with respect to their obligations on MTM, premium and exercise settlement.

6.3.1 Settlement of futures contracts

Futures contracts have two types of settlements, the MTM settlement which happens on a continuous basis at the end of each day, and the final settlement which happens on the last trading day of the futures contract.

MTM settlement:

All futures contracts for each member are marked-to-market(MTM) to the daily settlement price of the relevant futures contract at the end of each day. The profits/losses are computed as the difference between:

1. The trade price and the day's settlement price for contracts executed during the day but not squared up.
2. The previous day's settlement price and the current day's settlement price for brought forward contracts.
3. The buy price and the sell price for contracts executed during the day and squared up.

Table 6.6 explains the MTM calculation for a member. The settlement price for the contract for today is assumed to be 105.

The CMs who have a loss are required to pay the mark-to-market (MTM) loss amount in cash which is in turn passed on to the CMs who have made a MTM profit. This is known as daily mark-to-market settlement. CMs are responsible to collect and settle the daily MTM profits/losses incurred by the TMs and their clients clearing and settling through them. Similarly, TMs are responsible to collect/pay losses/ profits from/to their clients by the next day. The pay-in and pay-out of the mark-to-market settlement are effected on the day following the trade day. In case a futures contract is not traded on a day, or not traded during the last half hour, a 'theoretical settlement price' is computed as per the following formula:

Table 6.6 Computation of MTM at the end of the day

The table gives the MTM charged on various positions. The margin charged on the brought forward contract is the difference between the previous day's settlement price of Rs.100 and today's settlement price of Rs.105. Hence on account of the position brought forward, the MTM shows a profi t of Rs.500. For contracts executed during the day, the difference between the buy price and the sell price determines the MTM. In this example, 200 units are bought @ Rs.100 and 100 units sold @ Rs.102 during the day. Hence the MTM for the position closed during the day shows a profi t of Rs.200. Finally, the open position of contracts traded during the day, is margined at the day's settlement price and the profi t of Rs.500 credited to the MTM account. So the MTM account shows a profi t of Rs.1200.

Trade details	Quantity bought/sold	Settlement price	MTM
Brought forward from previous day	100@100	105	500
Traded during day			
Bought	200@100		
Sold	100@102	102	200
Open position (not squared up)	100@100	105	500
Total			1200

$$F = Se^{rT}$$

where:

F Theoretical futures price

S Value of the underlying index

r Cost of fi nancing(using continuously compounded interest rate) or rate of interest(MIBOR)

T Time till expiration

e 2.71828

After completion of daily settlement computation, all the open positions are reset to the daily settlement price. Such positions become the open positions for the next day.

Final settlement for futures

On the expiry day of the futures contracts, after the close of trading hours, NSCCL marks all positions of a CM to the final settlement price and the resulting profit/loss is settled in cash. Final settlement loss/profit amount is debited/ credited to the relevant CM's clearing bank account on the day following expiry day of the contract.

Settlement prices for futures

Daily settlement price on a trading day is the closing price of the respective futures contracts on such day. The closing price for a futures contract is currently calculated as the last half an hour weighted average price of the contract in the F&O Segment of NSE. Final settlement price is the closing price of the relevant underlying index/security in the capital market segment of NSE, on the last trading day of the contract. The closing price of the underlying Index/security is currently its last half an hour weighted average value in the capital market segment of NSE.

6.3.2 Settlement of options contracts

Options contracts have three types of settlements, daily premium settlement, exercise settlement, interim exercise settlement in the case of option contracts on securities and final settlement.

Daily premium settlement

Buyer of an option is obligated to pay the premium towards the options purchased by him. Similarly, the seller of an option is entitled to receive the premium for the option sold by him. The premium payable amount and the premium receivable amount are netted to compute the net premium payable or receivable amount for each client for each option contract.

Exercise settlement

Although most option buyers and sellers close out their options positions by an offsetting closing transaction, an understanding of exercise can help an option buyer determine whether exercise might be more advantageous than an offsetting sale of the option. There is always a possibility of the option seller being assigned an exercise. Once an exercise of an option has been assigned to an option seller, the option seller is bound to fulfill his obligation (meaning, pay the cash settlement amount in the case of a cash-settled option) even though he may not yet have been notified of the assignment.

Interim exercise settlement

Interim exercise settlement takes place only for option contracts on securities. An investor can exercise his in-the-money options at any time during trading hours, through his trading member. Interim exercise settlement is effected for such options at the close of the trading hours, on the day of exercise. Valid exercised option contracts are assigned to short positions in the option contract with the same series (i.e. having the same underlying, same expiry date and same strike price), on a random basis, at the client level. The CM who has exercised the option receives the exercise settlement value per unit of the option from the CM who has been assigned the option contract.

Final exercise settlement

Final exercise settlement is effected for all open long in–the–money strike price options existing at the close of trading hours, on the expiration day of an option contract. All such long positions are exercised and automatically assigned to short positions in option contracts with the same series, on a random basis. The investor who has long in–the–money options on the expiry date will receive the exercise settlement value per unit of the option from the investor who has been assigned the option contract.

Exercise process

The period during which an option is exercisable depends on the style of the option. On NSE, index options are European style, i.e. options are only subject to automatic exercise on the expiration day, if they are in–the–money. As compared to this, options on securities are American style. In such cases, the exercise is automatic on the expiration day, and voluntary prior to the expiration day of the option contract, provided they are in–the–money. Automatic exercise means that all in–the–money options would be exercised by NSCCL on the expiration day of the contract. The buyer of such options need not give an exercise notice in such cases. Voluntary exercise means that the buyer of an in–the–money option can direct his TM/CM to give exercise instructions to NSCCL. In order to ensure that an option is exercised on a particular day, the buyer must direct his TM to exercise before the cut-off time for accepting exercise instructions for that day. Usually, the exercise orders will be accepted by the system till the close of trading hours. Different TMs may have different cut–off times for accepting exercise instructions from customers, which may vary for different options. An option, which expires unexercised becomes worthless. Some TMs may accept standing instructions to exercise, or have procedures for the exercise of every option, which is in–the–money at expiration. Once an exercise instruction is given by a CM to NSCCL, it cannot ordinarily be revoked. Exercise notices given by a buyer at anytime on a day are processed by NSCCL after the close of trading hours on that day. All exercise notices received by NSCCL from the NEAT F&O system are processed to determine their validity. Some basic validation checks are carried out to check the open buy position of the exercising client/TM and if option contract is in–the–money. Once exercised contracts are found valid, they are assigned.

Assignment process

The exercise notices are assigned in standardized market lots to short positions in the option contract with the same series (i.e. same underlying, expiry date and strike price) at the client level. Assignment to the short positions is done on a random basis. NSCCL determines short positions, which are eligible to be assigned and then allocates the exercised positions to any one or more short positions. Assignments are made at the end of the trading day on which exercise instruction is received by NSCCL and notified to the members on the same day. It is possible that an option seller may not receive notification from its TM that an exercise has been assigned to him until the next day following the date of the assignment to the CM by NSCCL.

Exercise settlement computation

In case of index option contracts, all open long positions at in–the–money strike prices are automatically exercised on the expiration day and assigned to short positions in option contracts with the same series on a random basis. For options on securities, where exercise settlement may be interim or final, interim exercise for an open long in–the–money option position can be effected on any day till the expiry of the contract. Final exercise is automatically effected by NSCCL for all open long in–the–money positions in the expiring month option contract, on the expiry day of the option contract. The exercise settlement price is the closing price of the underlying(index or security) on the exercise day(for interim exercise) or the expiry day of the relevant option contract(final exercise). The exercise settlement value is the difference between the strike price and the final settlement price of the relevant option contract. For call options, the exercise settlement value receivable by a buyer is the difference between the final settlement price and the strike price for each unit of the underlying conveyed by the option contract, while for put options it is difference between the strike price and the final settlement price for each unit of the underlying conveyed by the option contract. Settlement of exercises of options on securities is currently by payment in cash and not by delivery of securities. It takes place for in-the-money option contracts.

The exercise settlement value for each unit of the exercised contract is computed as follows:

$$\text{Call options} = \text{Closing price of the security on the day of exercise} - \text{Strike price}$$

$$\text{Put options} = \text{Strike price} - \text{Closing price of the security on the day of exercise}$$

For final exercise the closing price of the underlying security is taken on the expiration day The exercise settlement by NSCCL would ordinarily take place on 3rd day following the day of exercise. Members may ask for clients who have been assigned to pay the exercise settlement value earlier.

Special facility for settlement of institutional deals

NSCCL provides a special facility to Institutions/Foreign Institutional Investors (FIIs)/Mutual Funds etc. to execute trades through any TM, which may be cleared and settled by their own CM. Such entities are called custodial participants (CPs). To avail of this facility, a CP is required to register with NSCCL through his CM. A unique CP code is allotted to the CP by NSCCL. All trades executed by a CP through any TM are required to have the CP code in the relevant field on the trading system at the time of order entry. Such trades executed on behalf of a CP are confirmed by their own CM (and not the CM of the TM through whom the order is entered), within the time specified by NSE on the trade day though the on-line confirmation facility. Till such time the trade is confirmed by CM of concerned CP, the same is considered as a trade of the TM and the responsibility of settlement of such trade vests with CM of the TM. Once confirmed by CM of concerned CP, such CM is responsible for clearing and settlement of deals of such custodial clients. FIIs have been permitted to trade in all the exchange traded derivative

contracts subject to compliance of the position limits prescribed for them and their sub-accounts, and compliance with the prescribed procedure for settlement and reporting. A FII/a sub-account of the FII, as the case may be, intending to trade in the F&O segment of the exchange, is required to obtain a unique Custodial Participant (CP) code allotted from the NSCCL. FIIs/sub–accounts of FIIs which have been allotted a unique CP code by NSCCL are only permitted to trade on the F&O segment. The FII/sub–account of FII ensures that all orders placed by them on the Exchange carry the relevant CP code allotted by NSCCL.

6.4 Risk management

NSCCL has developed a comprehensive risk containment mechanism for the F&O segment. The salient features of risk containment mechanism on the F&O segment are:

1. The financial soundness of the members is the key to risk management. Therefore, the requirements for membership in terms of capital adequacy (net worth, security deposits) are quite stringent.

2. NSCCL charges an upfront initial margin for all the open positions of a CM. It specifies the initial margin requirements for each futures/options contract on a daily basis. It also follows value-at-risk(VaR) based margining through SPAN. The CM in turn collects the initial margin from the TMs and their respective clients.

3. The open positions of the members are marked to market based on contract settlement price for each contract. The difference is settled in cash on a T+1 basis.

4. NSCCL's on-line position monitoring system monitors a CM's open positions on a real-time basis. Limits are set for each CM based on his capital deposits. The on-line position monitoring system generates alerts whenever a CM reaches a position limit set up by NSCCL. NSCCL monitors the CMs for MTM value violation, while TMs are monitored for contract-wise position limit violation.

5. CMs are provided a trading terminal for the purpose of monitoring the open positions of all the TMs clearing and settling through him. A CM may set exposure limits for a TM clearing and settling through him. NSCCL assists the CM to monitor the intra-day exposure limits set up by a CM and whenever a TM exceed the limits, it stops that particular TM from further trading.

6. A member is alerted of his position to enable him to adjust his exposure or bring in additional capital. Position violations result in withdrawal of trading facility for all TMs of a CM in case of a violation by the CM.

7. A separate settlement guarantee fund for this segment has been created out of the capital of members.

The most critical component of risk containment mechanism for F&O segment is the margining system and on-line position monitoring. The actual position monitoring and margining is carried out on–line through Parallel Risk Management System (PRISM). PRISM uses SPAN(r) (Standard Portfolio Analysis of Risk) system for the purpose of computation of on-line margins, based on the parameters defined by SEBI.

6.4.1 NSCCL–SPAN

The objective of NSCCL–SPAN is to identify overall risk in a portfolio of all futures and options contracts for each member. The system treats futures and options contracts uniformly, while at the same time recognizing the unique exposures associated with options portfolios, like extremely deep out–of–the–money short positions and inter–month risk. Its over–riding objective is to determine the largest loss that a portfolio might reasonably be expected to suffer from one day to the next day based on 99% VaR methodology. SPAN considers uniqueness of option portfolios. The following factors affect the value of an option:

1. Underlying market price
2. Strike price
3. Volatility(variability) of underlying instrument
4. Time to expiration
5. Interest rate

As these factors change, the value of options maintained within a portfolio also changes. Thus, SPAN constructs scenarios of probable changes in underlying prices and volatilities in order to identify the largest loss a portfolio might suffer from one day to the next. It then sets the margin requirement to cover this one–day loss. The complex calculations(e.g. the pricing of options) in SPAN are executed by NSCCL. The results of these calculations are called risk arrays. Risk arrays, and other necessary data inputs for margin calculation are provided to members daily in a file called the SPAN risk parameter file. Members can apply the data contained in the risk parameter files, to their specific portfolios of futures and options contracts, to determine their SPAN margin requirements. Hence, members need not execute complex option pricing calculations, which is performed by NSCCL. SPAN has the ability to estimate risk for combined futures and options portfolios, and also re–value the same under various scenarios of changing market conditions.

6.4.2 Types of margins

The margining system for F&O segment is explained below:

- Initial margin: Margin in the F&O segment is computed by NSCCL upto client level for open positions of CMs/TMs. These are required to be paid up-front on gross basis at individual client level for client positions and on net basis for proprietary positions. NSCCL collects initial margin for all the open positions of a CM based on the margins computed by NSE-SPAN. A CM is required to ensure collection of adequate initial margin from his TMs up-front. The TM is required to collect adequate initial margins up-front from his clients.

- Premium margin: In addition to initial margin, premium margin is charged at client level. This margin is required to be paid by a buyer of an option till the premium settlement is complete.

- Assignment margin for options on securities: Assignment margin is levied in addition to initial margin and premium margin. It is required to be paid on assigned positions of CMs towards interim and final exercise settlement obligations for option contracts on individual securities, till such obligations are fulfilled. The margin is charged on the net exercise settlement value payable by a CM towards interim and final exercise settlement.

- Client margins: NSCCL intimates all members of the margin liability of each of their client. Additionally members are also required to report details of margins collected from clients to NSCCL, which holds in trust client margin monies to the extent reported by the member as having been collected form their respective clients.

6.5 Adjustments for corporate actions

The basis for any adjustment for corporate actions is such that the value of the position of the market participants, on the cum and ex–dates for the corporate action, continues to remain the same as far as possible. This facilitates in retaining the relative status of positions, namely in-the-money, at-the-money and out-of-money. This also addresses issues related to exercise and assignments.

Corporate actions can be broadly classified under stock benefits and cash benefits. The various stock benefits declared by the issuer of capital are bonus, rights, merger/de-merger, amalgamation, splits, consolidations, hive-off, warrants and secured premium notes (SPNs) among others. The cash benefit declared by the issuer of capital is cash dividend.

Any adjustment for corporate actions is carried out on the last day on which a security is traded on a cum basis in the underlying equities market, after the close of trading hours. Adjustments may entail modifications to positions and/or contract specifications as listed below, such that the basic premise of adjustment laid down above is satisfied:

1. Strike price
2. Position
3. Market lot/multiplier

The adjustments are carried out on any or all of the above, based on the nature of the corporate action. The adjustments for corporate actions are carried out on all open, exercised as well as assigned positions.

Solved Problems

Q: In futures trading, profits are received or losses are paid

1. In the delivery month
2. On daily settlement
3. On the day of expiry of the contract
4. On a weekly settlement basis

A: The correct answer is number 2. ••

Q: Which of the following prices is used to compute MTM of a futures contract in case it is not traded on a given day?

1. Closing price of the underlying
2. Closing price of the futures contract
3. Theoretical price
4. MTM is not levied in such cases

A: The correct answer is number 3. ●●

Q: Exercise settlement for option contracts takes place at

1. Settlement price of the futures contract
2. Closing price of the underlying
3. Closing price of the far month contract
4. Closing price of the options contract

A: The correct answer is number 2. ●●

Q: On the last day of trading, settlement for futures contracts takes place at

1. Average of high and low for the underlying on that day
2. Closing price of the underlying
3. Closing price of the far month contract
4. Closing price of the options contract

A: The correct answer is number 2. ●●

Q: In the case of options, fi nal exercise settlement is _____

1. Sequential
2. Random
3. Automatic
4. Voluntary

A: The correct answer is number 3. ●●

Q: Which of the following option contracts are compulsorily settled on exercise date?

1. In the money options contracts
2. At the money options contracts
3. Out of the money options contracts
4. Deep out of the money options contracts

A: The correct answer is number 1. ●●

Q: The market-wide position limit for stock futures/options is

1. higher of 10% of non–promoter holding or 30 times the average traded quantity
2. lower of 10% of non–promoter holding or 30 times the average traded quantity
3. higher of 1% of non–promoter holding or 5% of open interest in the market
4. lower of 1% of non–promoter holding or 5% of open interest in the market

A: The correct answer is number 2. ••

Q: Assignment margin is charged at

1. Client level
2. Trading member level
3. Clearing member level
4. Institution level

A: The correct answer is number 3. ••

Q: A Trading member Manojbhai took proprietary positions in a November expiry contract. He bought 3000 trading units at 1210 and sold 2400 at 1220. The end-of-day settlement price for November expiry contract is 1220. If the initial margin per unit for the November contract is Rs 100 per unit, then the total initial margin payable by Manojbhai would be

1. Rs.60,000
2. Rs.30,000
3. Rs.3,00,000
4. Rs.5,40,000

A: The correct answer is number 1. ••

Q: Initial margin is collected to

1. Make good losses on the outstanding position
2. Make good daily losses
3. Safeguard against potential losses on outstanding positions
4. None of the above

A: Initial margin seeks to safeguard against potential losses on outstanding positions. The correct answer is number 3. ••

Q: The initial margin amount is large enough to cover a one-day loss that can be encountered on

1. 99% of the days.
2. 90% of the days.
3. 95% of the days.
4. None of the above

A: The correct answer is number 1. ••

Q: On expiry of a derivatives contract, the settlement price is the

1. Spot price of underlying asset
2. Futures close price
3. Spot price plus cost-of-carry
4. None of the above.

A: On expiry, the settlement price is the spot price of the underlying asset(index closing value in case of index futures/options and closing price of stock on spot market in case of stock futures/options). The correct answer is number 1. ●●

Q: The following are the details of trading member Ratanlal's proprietary and client position:
Proprietary : he buys 600 units @ 1020 and sells 1800 units @ 1025.
Client A: he buys 2000 units @ 1015
Client B: he buys 1600 units @ 1016 and sells 800 units @ 1022.
The settlement price of the day is 1023. What is MTM profi t/loss for Ratanlal?

1. Rs.31,800
2. Rs.28,400
3. Rs.26,600
4. Rs.31,200

A: The spot market closes at 1023. He makes a profi t of 1800 on the proprietary buy position (i.e. (1023-1020)*600) and a profi t of 3600 on the proprietary sell position (i.e. (1025-1023)*1800). On client A's account he makes a profi t of Rs.16,000 (i.e. (1023 -1015)*2000). On client B's account he makes a profi t of Rs.11,200(i.e. (1023-1016)*1600) and a loss of Rs.800(i.e. (1023-1022)*800). Hence his MTM profi t is (1800+3600+16,000+11,200-800). The correct answer is number 1. ●●

Q: What is the outstanding position on which initial margin will be calculated if Mr.Madanlal buys 800 which @ 1060 and sells 400 units @1055?

1. 1250 units
2. 800 units
3. 450 units
4. 400 units

A: The correct answer is number 4. ●●

Q: What will be MTM profi t/loss of Mr. Ramesh if he buys 800 @ 1040 and sells 600 @ 1045? The settlement price of the day was 1035.

1. - 4000
2. - 6000
3. + 6000
4. + 2000

A: The correct answer is number 4. ●●

Q: Mr. Amar buys 600 units @ 1040 and sells 400 units @ 1030. The settlement price is 1030. What is his MTM profi t/loss?

1. +Rs.7,200
2. +Rs.8,000
3. -Rs.6,000
4. +Rs.6,000

A: Mr. Amar makes a loss of Rs.6000 on his buy position and breaks even on his sell position. The correct answer is number 3. ••

Q: Trading member Shantilal took proprietary purchase in a March contract. He bought 1600 units @1200 and sold 1200 @1220. The end of day settlement price was 1221. What is the outstanding position on which initial margin will be calculated?

1. 2700 units
2. 1200 units
3. 1500 units
4. 400 units

A: The correct answer is number 4. ••

Q: What is the outstanding position on which initial margin will be charged if no proprietary trading is done and the details of client trading are: one client buys 800 units @1260. The second client buys 1000 units @ 1255 and sells 1200 units @ 1260.

1. 900 units
2. 1000 units
3. 800 units
4. 2700 units

A: One client buys 800, he is long 800. The second buys 1000 and sells 1200, hence he is short 200. The outstanding position on which margin is charged is 1000 (i.e. 800 + 200). The correct answer is number 2. ••

Q: The May futures contract on XYZ Ltd. closed at Rs.3940 yesterday. It closes today at Rs.3898.60. The spot closes at Rs.3800. Raju has a short position of 3000 in the May futures contract. He sells 2000 units of May expiring put options on XYZ with a strike price of Rs.3900 for a premium of Rs.110 per unit. What is his net obligation to/from the clearing corporation today?

1. Payin of Rs.344200
2. Payout of Rs.640000
3. Payout of Rs.344200
4. Payin of Rs.95800

A: On the short position of 3000 May futures contract, he makes a profi t of Rs.124200(i.e. 3000 * (3940 - 3898.60)). He receives Rs.220000 on the put options sold by him. Therefore his net obligation from the clearing corporation is Rs.344200. The correct answer in number 3. ••

Q: On April 1, Ms.Shetty has sold 400 calls on ABC Ltd. at a strike price of Rs.200 for a premium of Rs.20/call. On the cash market, ABC closes at Rs.240 on that day. If the call option is assigned to her on that day, what is her net obligation on April 1?

1. Payin of Rs.16000
2. Payin of Rs.8000
3. Payout of Rs.8000
4. Payout of Rs.16000

A: On the 400 calls sold by her, she receives a premium of Rs.8000. However on the calls assigned to her, she loses Rs.16,000(400 * (240-200)). Her payin obligation is Rs.8000. The correct answer is number 2. ••

Q: Rahul has the following carried forward net positions in the F&O segment on 27th June:

1. Long 500 PQR June Futures
2. Long 200 PQR July Futures
3. Short position of 300 PQR June calls at a strike price of Rs.260

Given below is the data pertaining to PQR on 2 consecutive days. What is the net funds obligations to/from the clearing corporation?

Contract descriptor	Date	Futures/options closing price	Underlying(spot) market closing price
June Futures	26-Jun	277	270
June 260 calls	26-Jun	9	270
June Futures	27-June	275	275
June 260 calls	27-Jun	12	275
July Futures	26-Jun	278	270
July Futures	27-Jun	280	275

1. Payin of Rs.5100
2. Payin of Rs.8700
3. Payout of Rs.3600
4. Payout of Rs.3000

A: On the long position of 500 June futures, he makes a loss of Rs.1000(i.e.500 * (277-275)). On the long position of 200 July futures, he makes a profi t of Rs.400(i.e.200 * (280-278)). On the short position of 300 June calls, he makes a loss of Rs.4500(i.e. 300 * (275-260)). Therefore the net loss is Rs.3900. The correct answer is number 1. ••

Chapter 7

Regulatory framework

The trading of derivatives is governed by the provisions contained in the SC(R)A, the SEBI Act, the rules and regulations framed thereunder and the rules and bye–laws of stock exchanges.

In this chapter we look at the broad regulatory framework for derivatives trading and the requirements to become a member and an authorised dealer of the F&O segment and the position limits as they apply to various participants.

7.1 Regulation for derivatives trading

SEBI set up a 24-member committee under the Chairmanship of Dr.L.C. Gupta to develop the appropriate regulatory framework for derivatives trading in India. On May 11, 1998 SEBI accepted the recommendations of the committee and approved the phased introduction of derivatives trading in India beginning with stock index futures.

The provisions in the SC(R)A and the regulatory framework developed thereunder govern trading in securities. The amendment of the SC(R)A to include derivatives within the ambit of 'securities' in the SC(R)A made trading in derivatives possible within the framework of that Act.

1. Any Exchange fulfilling the eligibility criteria as prescribed in the LC Gupta committee report can apply to SEBI for grant of recognition under Section 4 of the SC(R)A, 1956 to start trading derivatives. The derivatives exchange/segment should have a separate governing council and representation of trading/clearing members shall be limited to maximum of 40% of the total members of the governing council. The exchange would have to regulate the sales practices of its members and would have to obtain prior approval of SEBI before start of trading in any derivative contract.

2. The Exchange should have minimum 50 members.

3. The members of an existing segment of the exchange would not automatically become the members of derivative segment. The members of the derivative segment would need to fulfill the eligibility conditions as laid down by the LC Gupta committee.

4. The clearing and settlement of derivatives trades would be through a SEBI approved clearing corporation/house. Clearing corporations/houses complying with the eligibility conditions as laid down by the committee have to apply to SEBI for grant of approval.

5. Derivative brokers/dealers and clearing members are required to seek registration from SEBI. This is in addition to their registration as brokers of existing stock exchanges. The minimum networth for clearing members of the derivatives clearing corporation/house shall be Rs.300 Lakh. The networth of the member shall be computed as follows:

   - Capital + Free reserves
   - Less non-allowable assets viz.,
     (a) Fixed assets
     (b) Pledged securities
     (c) Member's card
     (d) Non-allowable securities(unlisted securities)
     (e) Bad deliveries
     (f) Doubtful debts and advances
     (g) Prepaid expenses
     (h) Intangible assets
     (i) 30% marketable securities

6. The minimum contract value shall not be less than Rs.2 Lakh. Exchanges have to submit details of the futures contract they propose to introduce.

7. The initial margin requirement, exposure limits linked to capital adequacy and margin demands related to the risk of loss on the position will be prescribed by SEBI/Exchange from time to time.

8. The L.C.Gupta committee report requires strict enforcement of "Know your customer" rule and requires that every client shall be registered with the derivatives broker. The members of the derivatives segment are also required to make their clients aware of the risks involved in derivatives trading by issuing to the client the Risk Disclosure Document and obtain a copy of the same duly signed by the client.

9. The trading members are required to have qualifi ed approved user and sales person who have passed a certifi cation programme approved by SEBI.

7.2 Forms of collaterals acceptable at NSCCL

Members and dealer authorised dealer have to fulfill certain requirements and provide collateral deposits to become members of the F&O segment. All collateral deposits are segregated into cash component and non-cash component. Cash component means cash, bank guarantee, fixed deposit receipts, T-bills and dated government securities. Non-cash component mean all other forms of collateral deposits like deposit of approved demat securities.

7.3 Requirements to become F&O segment member

The eligibility criteria for membership on the F&O segment is as given in Table 7.1. Table 7.2 gives the requirements for professional clearing membership. Anybody interested in taking

Table 7.1 Eligibility criteria for membership on F&O segment

Particulars (all values in Rs.Lakh)	CM and F&O segment	CM, WDM and F&O segment
Net worth [1]	100	200
Interest free security deposit(IFSD)[2]	125	275
Collateral security deposit(CSD)[3]	25	25
Annual subscription	1	2

1: No additional networth is required for self clearing members. However, a networth of Rs. 300 Lakh is required for TM–CM and PCM.
2 & 3: Additional Rs. 25 Lakh is required for clearing membership(SCM,TM–CM). In addition, the clearing member is required to bring in IFSD of Rs.2 Lakh and CSD of Rs.8 lakh per trading member he undertakes to clear and settle.

Table 7.2 Requirements for professional clearing membership

Particulars (all values in Rs.Lakh)	F&O segment	CM & F&O segment
Eligibility	Trading members of NSE/SEBI registered custodians/recognized banks	Trading members of NSE/SEBI registered custodians/recognized banks
Networth	300	300
Interest free security deposit(IFSD)	25	34
Collateral security deposit	25	50
Annual subscription	Nil	2.5

Note: The PCM is required to bring in IFSD of Rs.2 Lakh and CSD of Rs.8 Lakh per trading member whose trades he undertakes to clear and settle in the F&O segment.

membership of F&O segment is required to take membership of "CM and F&O segment" or "CM,WDM and F&O segment". An existing member of CM segment can also take membership of F&O segment. A trading member can also be a clearing member by meeting additional requirements. There can also be only clearing members.

7.4 Requirements to become authorised/approved user

Trading members and participants are entitled to appoint, with the approval of the F&O segment of the exchange authorised persons and approved users to operate the trading workstation(s). These authorised users can be individuals, registered partnership firms or corporate bodies.

Authorised persons cannot collect any commission or any amount directly from the clients he introduces to the trading member who appointed him. However he can receive a commission or any such amount from the trading member who appointed him as provided under regulation.

Approved users on the F&O segment have to pass a certification program which has been approved by SEBI. Each approved user is given a unique identification number through which he will have access to the NEAT system. The approved user can access the NEAT system through a password and can change such password from time to time.

7.5 Position limits

Position limits have been specified by SEBI at trading member, client, market and FII levels respectively.

7.5.1 Trading member position limits

Trading member position limits are specified as given below:

1. Trading member position limits in equity index option contracts: The trading member position limits in equity index option contracts is higher of Rs.250 crore or 15% of the total open interest in the market in equity index option contracts. This limit is applicable on open positions in all option contracts on a particular underlying index.

2. Trading member position limits in equity index futures contracts: The trading member position limits in equity index futures contracts is higher of Rs.250 crore or 15% of the total open interest in the market in equity index futures contracts. This limit is applicable on open positions in all futures contracts on a particular underlying index.

7.5.2 Client level position limits

The gross open position for each client, across all the derivative contracts on an underlying, should not exceed 1% of the free float market capitalization (in terms of number of shares) or 5% of the open interest in all derivative contracts in the same underlying stock (in terms of number of shares) whichever is higher.

7.5.3 Market wide position limits

The market wide limit of open position (in terms of the number of underlying plus stock) on futures and option contracts on a particular underlying stock should be lower of 30 times the average number of shares traded daily during the previous calendar month, in the relevant underlying security in the underlying segment or 20% of the number of shares held by non-promoters in the relevant underlying security i.e. free–float holding. This limit is applicable on all open positions in all futures and option contracts on a particular underlying stock. The enforcement of the market wide limits is done in the following manner:

- At end of the day the exchange tests whether the market wide open interest for any scrip exceeds 95% of the market wide position limit for that scrip. In case it does so, the exchange takes note of open position of all client/TMs as at end of that day for that scrip and from next day onwards they can trade only to decrease their positions through offsetting positions.

- At the end of each day during which the ban on fresh positions is in force for any scrip, the exchange tests whether any member or client has increased his existing positions or has created a new position in that scrip. If so, that client is subject to a penalty equal to a specified percentage (or basis points) of the increase in the position (in terms of notional value). The penalty is recovered before trading begins next day. The exchange specifies the percentage or basis points, which is set high enough to deter violations of the ban on increasing positions.

- The normal trading in the scrip is resumed after the open outstanding position comes down to 80% or below of the market wide position limit. Further, the exchange also checks on a monthly basis, whether a stock has remained subject to the ban on new position for a significant part of the month consistently for three months. If so, then the exchange phases out derivative contracts on that underlying.

7.5.4 FII and sub–account position limits

FII and sub–account position limits are specified as given below:

1. The FII position limit in all index options contracts on a particular underlying index is Rs. 250 crore or 15% of the total open interest of the market in index options, whichever is higher, per exchange. This limit is applicable on open positions in all option contracts on a particular underlying index.

2. FII position limit in all index futures contracts on a particular underlying index is the same as mentioned above for FII position limits in index option contracts. This limit is applicable on open positions in all futures contracts on a particular underlying index.

In addition to the above, FIIs can take exposure in equity index derivatives subject to the following limits:

1. Short positions in index derivatives (short futures, short calls and long puts) not exceeding (in notional value) the FIIs holding of stocks.

2. Long positions in index derivatives (long futures, long calls and short +puts) not exceeding (in notional value) the FIIs holding of cash, government +securities, T-bills and similar instruments.

The FIIs should report to the clearing member (custodian) the extent of the FIIs holding of stocks, cash, government securities, t-bills and similar instruments before the end of the day. The clearing member (custodian) in turn should report the same to the exchange. The exchange monitors the FII position limits. The position limit for sub-account is same as that of client level position limits.

7.5.5 Position limits for mutual funds

Mutual Funds are allowed to participate in the derivatives market at par with Foreign Institutional Investors(FII). Accordingly, mutual funds shall be treated at par with a registered FII in respect of position limits in index futures, index options, stock options and stock futures contracts. Mutual funds will be considered as trading members like registered FIIs and the schemes of mutual funds will be treated as clients like sub-accounts of FIIs.

The position limits for Mutual Funds and its schemes shall be as under:

1. Position limit for mutual funds in index options contracts:

   (a) The mutual fund position limit in all index options contracts on a particular underlying index shall be Rs.250 crore or 15% of the total open interest of the market in index options, whichever is higher, per stock exchange.

   (b) This limit would be applicable on open positions in all options contracts on a particular underlying index.

2. Position limit for mutual funds in index futures contracts:

   (a) The mutual fund position limit in all index futures contracts on a particular underlying index shall be Rs.250 crore or 15% of the total open interest of the market in index futures, whichever is higher, per stock exchange.

   (b) This limit would be applicable on open positions in all futures contracts on a particular underlying index.

3. Additional position limit for hedging: In addition to the position limits above, mutual funds may take exposure in equity index derivatives subject to the following limits:

   (a) Short positions in index derivatives (short futures, short calls and long puts) shall not exceed (in notional value) the mutual Fund's holding of stocks.

   (b) Long positions in index derivatives (long futures, long calls and short puts) shall not exceed (in notional value) the mutual Fund's holding of cash, government securities, T–Bills and similar instruments.

4. Position limit for mutual funds for stock based derivative contracts: The mutual fund position limit in a derivative contract on a particular underlying stock, i.e. stock option contracts and stock futures contracts are as follows:

   (a) For stocks in which the market wide position limit is less than or equal to Rs.250 crore, the Mutual Fund position limit in such stock shall be 20% of the market wide position limit.

   (b) For stocks in which the market wide position limit is greater than Rs.250 crore, the Mutual Fund position limit in such stock shall be Rs.50 crore.

5. Position limit for each scheme of a mutual fund: The position limits for each scheme of mutual fund and disclosure requirements shall be identical to that prescribed for a sub–account of a FII. Therefore, the scheme–wise position limit/disclosure requirements shall be as follows:

(a) For stock option and stock futures contracts, the gross open position across all derivative contracts on a particular underlying stock of a scheme of a mutual fund shall not exceed the higher of 1% of the free fbat market capitalisation (in terms of number of shares). Or 5% of the open interest in the derivative contracts on a particular underlying stock (in terms of number of contracts).

(b) This position limits shall be applicable on the combined position in all derivative contracts on an underlying stock at a stock exchange.

(c) For index based contracts, mutual funds shall disclose the total open interest held by its scheme or all schemes put together in a particular underlying index, if such open interest equals to or exceeds 15% of the open interest of all derivative contracts on that underlying index.

7.6 Reporting of client margin

Clearing Members (CMs) and Trading Members (TMs) are required to collect upfront initial margins from all their Trading Members/ Constituents.

CMs are required to compulsorily report, on a daily basis, details in respect of such margin amount due and collected, from the TMs/ Constituents clearing and settling through them, with respect to the trades executed/ open positions of the TMs/ Constituents, which the CMs have paid to NSCCL, for the purpose of meeting margin requirements.

Similarly, TMs are required to report on a daily basis details in respect of such margin amount due and collected from the constituents clearing and settling through them, with respect to the trades executed/ open positions of the constituents, which the trading members have paid to the CMs, and on which the CMs have allowed initial margin limit to the TMs.

7.7 Accounting for futures

The Institute of Chartered Accountants of India (ICAI) has issued guidance notes on accounting of equity index and equity stock futures & options contracts from the view point of parties who enter into such futures contracts as buyers or sellers. For other parties involved in the trading process, like brokers, trading members, clearing members and clearing corporations, a trade in equity index futures is similar to a trade in, say shares, and does not pose any peculiar accounting problems. Hence in this section we shall largely focus on the accounting treatment of equity index futures in the books of the client. But before we do so, a quick re-look at some of the terms used.

1. Clearing corporation/house: Clearing corporation/house means the clearing corporation/house approved by SEBI for clearing and settlement of trades on the derivatives exchange/segment. All the clearing and settlement for trades that happen on the NSE's market is done through NSCCL.

2. Clearing member: Clearing member means a member of the clearing corporation and includes all categories of clearing members as may be admitted as such by the clearing corporation to the derivatives segment.

3. Client: A client means a person, on whose instructions and, on whose account, the trading member enters into any contract for the purchase or sale of any contract or does any act in relation thereto.

4. Contract month: Contract month means the month in which the exchange/clearing corporation rules require a contract to be finally settled.

5. Daily settlement price: Daily settlement price is the closing price of the equity index futures contract for the day or such other price as may be decided by the clearing house from time to time.

6. Derivative exchange/segment: Derivative exchange means an exchange approved by SEBI as a derivative exchange. Derivative segment means segment of an existing exchange approved by SEBI as derivatives segment.

7. Final settlement price: The final settlement price is the closing price of the equity index futures contract on the last trading day of the contract or such other price as may be specified by the clearing corporation, from time to time.

8. Long position: Long position in an equity index futures contract means outstanding purchase obligations in respect of the equity index futures contract at any point of time.

9. Open position: Open position means the total number of equity index futures contracts that have not yet been offset and closed by an opposite position.

10. Settlement date: Settlement date means the date on which the settlement of outstanding obligations in an equity index futures contract are required to be settled as provided in the Bye-Laws of the Derivatives exchange/segment.

11. Short position: Short position in an equity index futures contract means outstanding sell obligations in respect of an equity index futures contract at any point of time.

12. Trading member: Trading member means a Member of the Derivatives exchange/segment and registered with SEBI.

7.7.1 Accounting at the inception of a contract

Every client is required to pay to the trading member/clearing member, the initial margin determined by the clearing corporation as per the bye-laws/regulations of the exchange for entering into equity index futures contracts. Such initial margin paid/payable should be debited to “Initial margin - Equity index futures account”. Additional margins, if any, should also be accounted for in the same manner. It may be mentioned that at the time when the contract is entered into for purchase/sale of equity index futures, no entry is passed for recording the contract because no payment is made at that time except for the initial margin. At the balance sheet date, the balance in the ‘Initial margin - Equity index futures account’ should be shown separately under the head ‘current assets’. In those cases where any amount has been paid in excess of the initial/additional margin, the excess should be disclosed separately as a deposit under the head ‘current assets’. In cases where instead of paying initial margin in cash, the client provides bank guarantees or lodges securities with the member, a disclosure should be made in the notes to the financial statements of the client.

7.7.2 Accounting at the time of daily settlement

This involves the accounting of payment/receipt of mark-to-market margin money. Payments made or received on account of daily settlement by the client would be credited/debited to the bank account and the corresponding debit or credit for the same should be made to an account titled as "Mark-to-market margin - Equity index futures account".

Some times the client may deposit a lump sum amount with the broker/trading member in respect of mark-to-market margin money instead of receiving/paying mark-to-market margin money on daily basis. The amount so paid is in the nature of a deposit and should be debited to an appropriate account, say, "Deposit for mark-to-market margin account". The amount of "mark-to-market margin" received/paid from such account should be credited/debited to "Mark-to-market margin - Equity index futures account" with a corresponding debit/credit to "Deposit for mark-to-market margin account". At the year-end, any balance in the "Deposit for mark-to-market margin account" should be shown as a deposit under the head "Current assets".

7.7.3 Accounting for open positions

Position left open on the balance sheet date must be accounted for. Debit/credit balance in the "mark-to-market margin - Equity index futures account", maintained on global basis, represents the net amount paid/received on the basis of movement in the prices of index futures till the balance sheet date. Keeping in view 'prudence' as a consideration for preparation of financial statements, provision for anticipated loss, which may be equivalent to the net payment made to the broker (represented by the debit balance in the "Mark-to-Market margin - Equity index futures account") should be created by debiting the profit and loss account. Net amount received (represented by credit balance in the "Mark-to-Market margin - Equity index futures account") being anticipated profit should be ignored and no credit for the same should be taken in the profit and loss account. The debit balance in the said "mark-to-market margin - Equity index futures account", i.e., net payment made to the broker, may be shown under the head "Current assets, Loans and Advances" in the balance sheet and the provision created there-against should be shown as a deduction therefrom. On the other hand, the credit balance in the said account, i.e., the net amount received from the broker, should be shown as a current liability under the head "Current liabilities and provisions in the balance sheet".

7.7.4 Accounting at the time of final settlement

This involves accounting at the time of final settlement or squaring-up of the contract. At the expiry of a series of equity index futures, the profit/loss, on final settlement of the contracts in the series, should be calculated as the difference between final settlement price and contract prices of all the contracts in the series. The profit/loss, so computed, should be recognized in the profit and loss account by corresponding debit/credit to "mark-to-market margin - Equity index futures account". However, where a balance exists in the provision account created for anticipated loss, any loss arising on such settlement should be first charged to such provision account, to the extent of the balance available in the provision account, and the balance of loss, if

any, should be charged to the profit and loss account. Same accounting treatment should be made when a contract is squared-up by entering into a reverse contract. If more than one contract in respect of the series of equity index futures contracts to which the squared-up contract pertains is outstanding at the time of the squaring of the contract, the contract price of the contract so squared-up should be determined using the weighted average method for calculating profit/loss on squaring-up.

On the settlement of an equity index futures contract, the initial margin paid in respect of the contract is released which should be credited to "Initial margin - Equity index futures account", and a corresponding debit should be given to the bank account or the deposit account (where the amount is not received).

7.7.5 Accounting in case of a default

When a client defaults in making payment in respect of a daily settlement, the contract is closed out. The amount not paid by the Client is adjusted against the initial margin. In the books of the Client, the amount so adjusted should be debited to "Mark-to-Market - Equity index futures account" with a corresponding credit to "Initial margin - Equity index futures account". The amount of initial margin on the contract, in excess of the amount adjusted against the mark-to-market margin not paid, will be released. The accounting treatment in this regard will be the same as explained above. In case, the amount to be paid on daily settlement exceeds the initial margin the excess is a liability and should be shown as such under the head 'Current liabilities and provisions', if it continues to exist on the balance sheet date. The amount of profit or loss on the contract so closed out should be calculated and recognized in the profit and loss account in the manner dealt with above.

7.7.6 Disclosure requirements

The amount of bank guarantee and book value as also the market value of securities lodged should be disclosed in respect of contracts having open positions at the year end, where initial margin money has been paid by way of bank guarantee and/or lodging of securities.

Total number of contracts entered and gross number of units of equity index futures traded (separately for buy/sell) should be disclosed in respect of each series of equity index futures.

The number of equity index futures contracts having open position, number of units of equity index futures pertaining to those contracts and the daily settlement price as of the balance sheet date should be disclosed separately for long and short positions, in respect of each series of equity index futures.

7.8 Accounting for equity index options and equity stock options

The Institute of Chartered Accountants of India issued guidance note on accounting for index options and stock options from the view point of the parties who enter into such contracts as

buyers/holder or sellers/writers. Following are the guidelines for accounting treatment in case of cash settled index options and stock options:

7.8.1 Accounting at the inception of a contract

The seller/writer of the option is required to pay initial margin for entering into the option contract. Such initial margin paid would be debited to 'Equity Index Option Margin Account' or to 'Equity Stock Option Margin Account', as the case may be. In the balance sheet, such account should be shown separately under the head 'Current Assets'. The buyer/holder of the option is not required to pay any margin. He is required to pay the premium. In his books, such premium would be debited to 'Equity Index Option Premium Account' or 'Equity Stock Option Premium Account', as the case may be. In the books of the seller/writer, such premium received should be credited to 'Equity Index Option Premium Account' or 'Equity Stock Option Premium Account' as the case may be.

7.8.2 Accounting at the time of payment/receipt of margin

Payments made or received by the seller/writer for the margin should be credited/debited to the bank account and the corresponding debit/credit for the same should also be made to 'Equity Index Option Margin Account' or to 'Equity Stock Option Margin Account', as the case may be. Sometimes, the client deposit a lump sum amount with the trading/clearing member in respect of the margin instead of paying/receiving margin on daily basis. In such case, the amount of margin paid/received from/into such accounts should be debited/credited to the 'Deposit for Margin Account'. At the end of the year the balance in this account would be shown as deposit under 'Current Assets'.

7.8.3 Accounting for open positions as on balance sheet dates

The 'Equity Index Option Premium Account' and the 'Equity Stock Option Premium Account' should be shown under the head 'Current Assets' or 'Current Liabilities', as the case may be.

In the books of the buyer/holder, a provision should be made for the amount by which the premium paid for the option exceeds the premium prevailing on the balance sheet date. The provision so created should be credited to 'Provision for Loss on Equity Index Option Account' to the 'Provision for Loss on Equity Stock Options Account', as the case may be. The provision made as above should be shown as deduction from 'Equity Index Option Premium' or 'Equity Stock Option Premium' which is shown under 'Current Assets'.

In the books of the seller/writer, the provision should be made for the amount by which premium prevailing on the balance sheet date exceeds the premium received for that option. This provision should be credited to 'Provision for Loss on Equity Index Option Account' or to the 'Provision for Loss on Equity Stock Option Account', as the case may be, with a corresponding debit to profit and loss account. 'Equity Index Options Premium Account' or 'Equity Stock Options Premium Account' and 'Provision for Loss on Equity Index Options

Account' or 'Provision for Loss on Equity Stock Options Account' should be shown under 'Current Liabilities and Provisions'.

In case of any opening balance in the 'Provision for Loss on Equity Stock Options Account' or the 'Provision for Loss on Equity Index Options Account', the same should be adjusted against the provision required in the current year and the profit and loss account be debited/credited with the balance provision required to be made/excess provision written back.

7.8.4 Accounting at the time of final settlement

On exercise of the option, the buyer/holder will recognize premium as an expense and debit the profit and loss account by crediting 'Equity Index Option Premium Account' or 'Equity Stock Option Premium Account'. Apart from the above, the buyer/holder will receive favorable difference, if any, between the final settlement price as on the exercise/expiry date and the strike price, which will be recognized as income. On exercise of the option, the seller/writer will recognize premium as an income and credit the profit and loss account by debiting 'Equity Index Option Premium Account' or 'Equity Stock Option Premium Account'. Apart from the above, the seller/writer will pay the adverse difference, if any, between the final settlement price as on the exercise/expiry date and the strike price. Such payment will be recognized as a loss.

As soon as an option gets exercised, margin paid towards such option would be released by the exchange, which should be credited to 'Equity Index Option Margin Account' or to 'Equity Stock Option Margin Account', as the case may be, and the bank account will be debited.

7.8.5 Accounting at the time of squaring off an option contract

The difference between the premium paid and received on the squared off transactions should be transferred to the profit and loss account. Following are the guidelines for accounting treatment in case of delivery settled index options and stock options: The accounting entries at the time of inception, payment/receipt of margin and open options at the balance sheet date will be the same as those in case of cash settled options. At the time of final settlement, if an option expires unexercised then the accounting entries will be the same as those in case of cash settled options. If the option is exercised then shares will be transferred in consideration for cash at the strike price. For a call option the buyer/holder will receive equity shares for which the call option was entered into. The buyer/holder should debit the relevant equity shares account and credit cash/bank. For a put option, the buyer/holder will deliver equity shares for which the put option was entered into. The buyer/holder should credit the relevant equity shares account and debit cash/bank. Similarly, for a call option the seller/writer will deliver equity shares for which the call option was entered into. The seller/writer should credit the relevant equity shares account and debit cash/bank. For a put option the seller/writer will receive equity shares for which the put option was entered into. The seller/writer should debit the relevant equity shares account and credit cash/bank. In addition to this entry, the premium paid/received will be transferred to the profit and loss account, the accounting entries for which should be the same as those in case of cash settled options.

7.9 Taxation of derivatives transaction in securities

7.9.1 Securities transaction tax on derivatives transactions

Finance Act (No.2), 2004 has introduced Securities Transaction Tax on all derivative transactions entered into in a recognized stock exchange. This tax is payable by the seller of the derivative instrument. The rate of tax applicable on the same has been revised to 0.0133% of the value of taxable securities transaction by Finance Act, 2005.

The value of taxable securities transaction relating to "option in securities" is the aggregate of the strike price and the option premium of such "option in securities". The value of taxable securities transaction relating to "futures" is the price at which such "futures" are traded.

Securities Transaction Tax Rules, 2004 provide for rounding off of the value taxable securities transaction, amount of securities transaction tax, interest and penalty payable and the amount of refund due to the nearest rupee.

Consider an example. Mr. A sells a futures contract of M/s. XYZ Ltd. (Lot Size: 1000) expiring on 29–Sep–2005 for Rs. 300. The spot price of the share is Rs. 290. The securities transaction tax thereon would be calculated as follows:

1. Total futures contract value = $1000 \times 300 =$ Rs. 3,00,000
2. Securities transaction tax payable thereon $0.0133\% = 3,00,000 \times 0.0133 =$ Rs. 40

Note : No tax on such a transaction is payable by the buyer of the futures contract.

Consider another example. Mr. A sells an options contract of M/s. XYZ Ltd. (Lot Size: 1000) expiring on 29–Sep–2005 for Rs. 10. The strike price of the contract is Rs. 300. The spot price of the share is Rs. 290. The securities transaction tax thereon would be calculated as follows:

1. Total options contract value = $1000 \times 300 =$ Rs. 3,00,000
2. Total options premium value = $1000 \times 10 =$ Rs. 10,000
3. Total value of securities transaction = Rs. 3,10,000
4. Securities transaction tax payable thereon $0.0133\%= 3,10,000 \times 0.0133$ = Rs. 41

Note : No tax on such a transaction is payable by the buyer of the options contract.

7.9.2 Taxation of Profit / Loss on derivative transaction in securities

Prior to Financial Year 2005–06, transaction in derivatives were considered as speculative transactions for the purpose of determination of tax liability under the Income-tax Act. This is in view of section 43(5) of the Income-tax Act which defined speculative transaction as a transaction in which a contract for purchase or sale of any commodity, including stocks and shares, is periodically or ultimately settled otherwise than by the actual delivery or transfer of

the commodity or scrips. However, such transactions entered into by hedgers and stock exchange members in course of jobbing or arbitrage activity were specifically excluded from the purview of definition of speculative transaction.

In view of the above provisions, most of the transactions entered into in derivatives by investors and speculators were considered as speculative transactions. The tax provisions provided for differential treatment with respect to set off and carry forward of loss on such transactions. Loss on derivative transactions could be set off only against other speculative income and the same could not be set off against any other income. This resulted in payment of higher taxes by an assessee. Again, loss on derivative transactions which could not be set off against any other speculative gains could be carried forward for a period of four years. If such loss could not be set off against speculative income over the said period, the assessee could not claim any tax relief with respect to the loss suffered.

Finance Act, 2005 has amended section 43(5) so as to exclude transactions in derivatives carried out in a "recognized stock exchange" for this purpose. This implies that income or loss on derivative transactions which are carried out in a "recognized stock exchange" is not taxed as speculative income or loss. Thus, loss on derivative transactions can be set off against any other income during the year. In case the same cannot be set off, it can be carried forward to subsequent assessment year and set off against any other income of the subsequent year. Such losses can be carried forward for a period of 8 assessment years. It may also be noted that securities transaction tax paid on such transactions is eligible for rebate under section 88E of the Income-tax Act in the manner provided in the said section.

Solved problems

Q: The regulatory framework for the derivatives market in India has been developed by the

1. L.C.Gupta committee
2. J.R.Varma committee
3. A.C.Gupta committee
4. None of the above

A: The correct answer is number 1. ••

Q: As per the requirements of SEBI, a derivatives exchange must have a minimum of _____ members

1. 100
2. 50
3. 75
4. 25

A: The correct answer is number 2. ••

Q: The minimum networth for clearing members of the derivatives clearing corporation/house shall be

1. Rs.300 Lakh
2. Rs.250 Lakh
3. Rs.500 Lakh
4. None of the above

A: The correct answer is number 1. ••

Q: Which of the following persons are eligible to become trading members in the F&O segment of NSE?

1. Individuals
2. Registered fi rms
3. Companies
4. Any of the above

A: The correct answer is number 4. ••

Q: The dealer/broker and sales persons in the F&O segment shall be required to pass which of the following examinations?

1. MBA (Finance)
2. Chartered Accountancy
3. Certifi ed Financial Analyst
4. NCFM

A: The correct answer is number 4. ••

Q: Which of the following Acts governs trading of derivatives in India?

1. Securities Contracts (Regulation) Act, 1956
2. SEBI Act, 1992
3. Capital Issues (Control) Act, 1947
4. Depositories Act, 1956

A: The correct answer is number 1. ••

Q: A clearing member of F&O segment is required to have a networth of _____ and keep collateral security deposit of _____

1. Rs.3 Crore, 50 Lakh.
2. Rs.5 Crore, 50 Lakh.
3. Rs.3 Crore, 80 Lakh.
4. Rs.5 Crore, 10 Lakh.

A: The correct answer is number 1. ••

Q: The clearing member has to maintain a minimum liquid networth of _____.

1. Rs.35 Lakh
2. Rs.50 Lakh
3. Rs.80 Lakh
4. Rs.20 Lakh

A: The correct answer is number 2. ••

Q: Margins may be deposited in the form of

1. Cash only
2. Cash + bank guarantee + fixed deposit + securities
3. Cash + fixed deposits only
4. 30% cash and fixed deposits + 70% bank guarantee and securities

A: The correct answer 2. ••

References/suggested readings

The readings suggested here are supplementary in nature and would prove to be helpful for those interested in learning more about derivatives.

1. *Derivatives FAQ* by Ajay Shah and Susan Thomas
2. *Escape to the futures* by Leo Melamed
3. *Futures and options* by Hans R.Stoll and Robert E. Whaley.
4. *Futures and options in risk management* by Terry J. Watsham.
5. *Futures, options and swaps* by Robert W. Kolb.
6. *Indian Securities Market Review,2001*, National Stock Exchange
7. *Introduction to futures and options markets* by John Kolb
8. *NSENEWS*, National Stock Exchange
9. *Options and financial future: Valuation and uses* by David A. Dubofsky.
10. *Regulatory framework for financial derivatives in India* by Dr.L.C.Gupta Committee
11. *Risk containment in the derivatives market* by Prof.J.R.Varma group
12. *Rubinstein on derivatives* by Mark Rubinstein.
13. *Rules, regulations and bye–laws, (F &O segment)* of NSE & NSCCL
14. *Understanding futures markets* by Robert W. Kolb.
15. *http://www.derivativesindia.com*
16. *http://www.derivatives-r-us.com*
17. *http://www.igidr.ac.in./∼ajayshah*
18. *http://www.mof.nic.in*
19. *http://www.nseindia.com*
20. *http://www.rediff/money/derivatives*
21. *http://www.sebi.gov.in*

Index

arbitrageurs, 7

basis, 24
basket trading, 60
baskets, 7

clearing member, 53
    trading, 10
    professional, 10
    self, 10
contract cycle
    futures, 62

derivatives
    exchange traded, 9
    OTC, 9

Exchange Traded Fund, 18

financial derivatives, 6
forwards, 21
futures, 6

hedgers, 7

impact cost, 17
index
    equally weighted, 14
    funds, 18
    Market capitalization weighted, 14
    price weighted, 14
    S&P CNX Nifty, 16
inquiry window, 59

LEAPS, 7

market by price, 59
market watch, 58

option
    american, 25
    at-the-money, 26
    buyer, 25
    call, 25
    european, 26
    in-the-money, 26
    index, 24
    intrinsic value, 26
    out-of-money, 26
    premium, 25
    put, 25
    stock, 25
    time value, 26
    writer, 25
order
    day, 57
    IOC, 57
    stop–loss, 57

price
    limit, 58
    trigger, 58

speculators, 7
spot price, 23
swaps, 7
    currency, 7
    interest rate, 7
swaptions, 7

warrants, 7