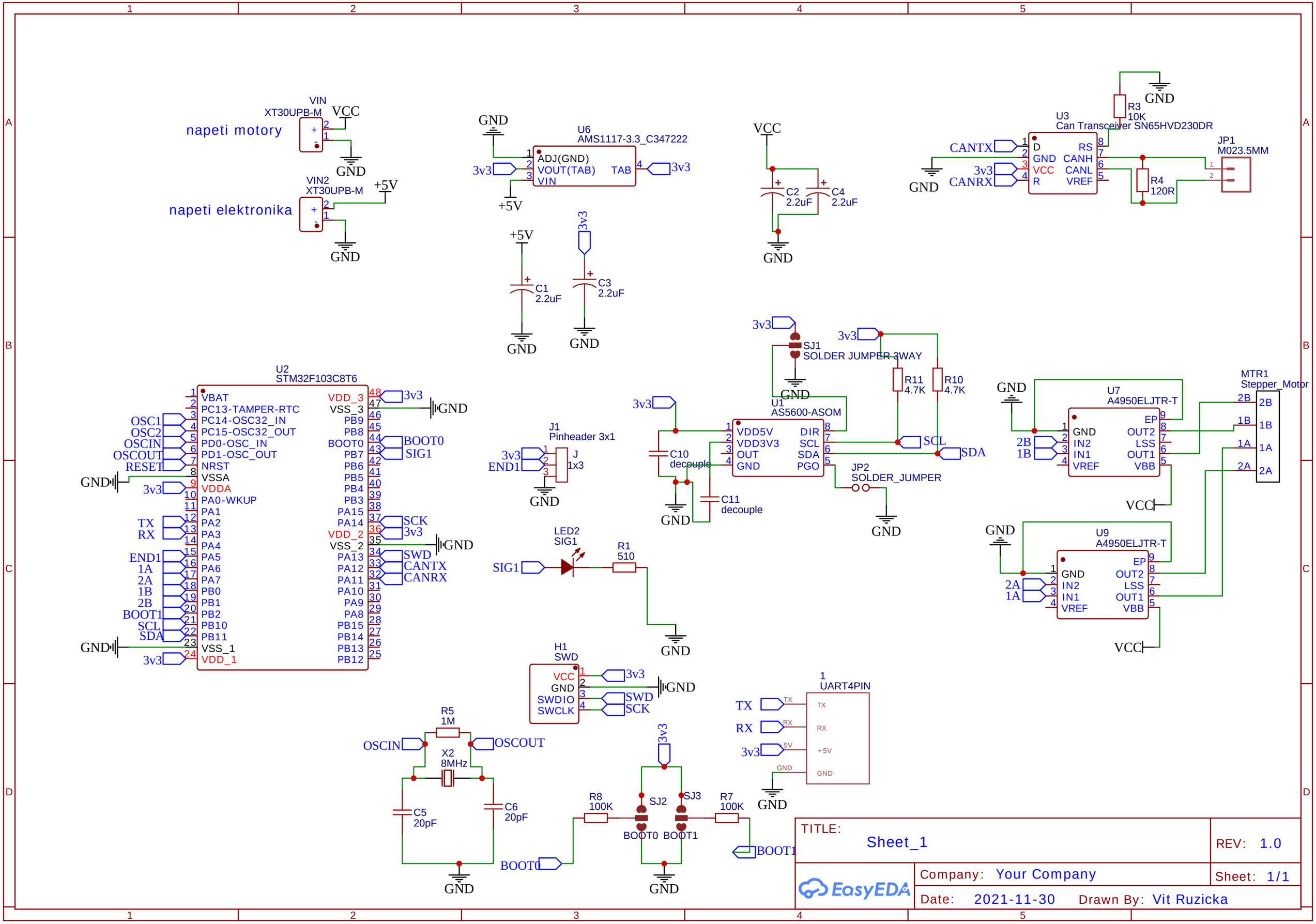
napeti motory
VIN
XT30UPB-M
VCC
GND
napeti elektronika
VIN2
XT30UPB-M
+5V
U6
AMS1117-3.3_C347222
ADJ(GND)
VOUT(TAB)
VIN
TAB
3v3
C1
2.2uF
C2
2.2uF
C3
2.2uF
C4
2.2uF
U3
Can Transceiver SN65HVD230DR
R3
10K
R4
120R
CANTX
CANRX
JP1
M023.5MM
U2
STM32F103C8T6
VBAT
PC13-TAMPER-RTC
PC14-OSC32_IN
PC15-OSC32_OUT
PD0-OSC_IN
PD1-OSC_OUT
NRST
VSSA
VDDA
PA0-WKUP
VDD_3
VSS_3
BOOT0
SIG1
SCK
SWD
CANTX
CANRX
OSC1
OSC2
OSCIN
OSCOUT
RESET
TX
RX
END1
1A
2A
1B
2B
BOOT1
SCL
SDA
J1
Pinheader 3x1
J
1x3
LED2
SIG1
R1
510
SJ1
SOLDER JUMPER 3WAY
R11
4.7K
R10
4.7K
U1
AS5600-ASOM
VDD5V
VDD3V3
OUT
GND
DIR
SCL
SDA
PGO
C10
decouple
C11
decouple
JP2
SOLDER_JUMPER
U7
A4950ELJTR-T
U9
A4950ELJTR-T
EP
OUT2
LSS
OUT1
VBB
IN2
IN1
VREF
MTR1
Stepper_Motor
H1
SWD
SWDIO
SWCLK
1
UART4PIN
R5
1M
X2
8MHz
C5
20pF
C6
20pF
R8
100K
SJ2
SJ3
R7
100K
BOOT0
BOOT1
TITLE:
Sheet_1
REV: 1.0
Company: Your Company
Sheet: 1/1
Date: 2021-11-30
Drawn By: Vit Ruzicka
EasyEDA