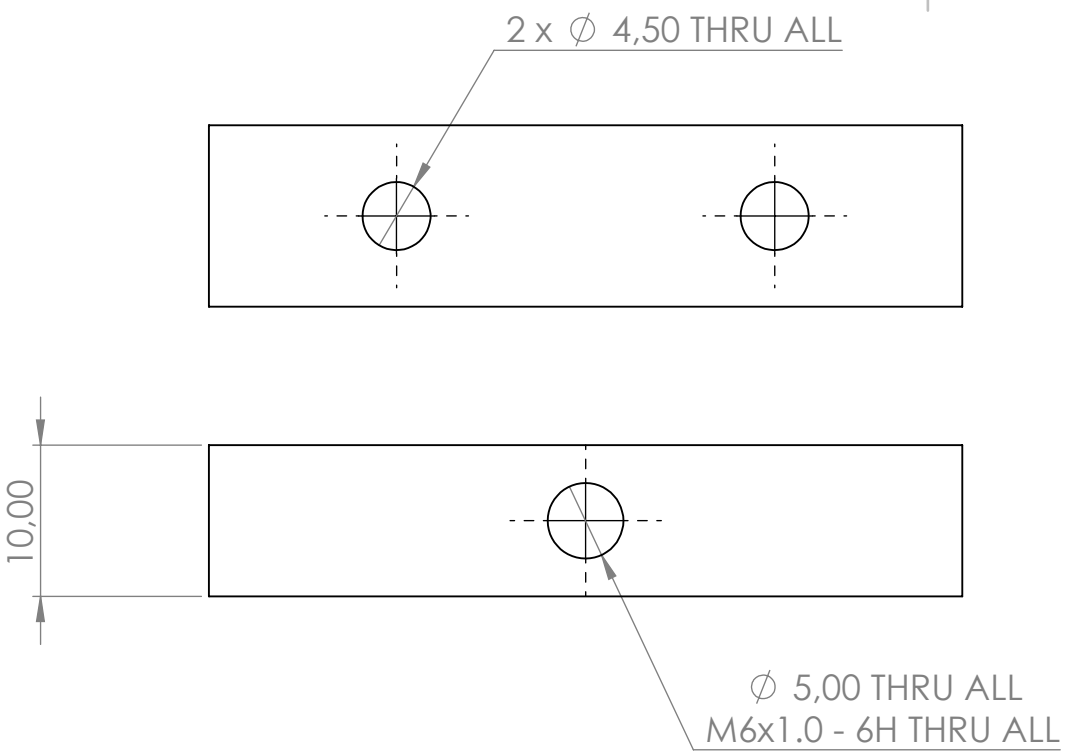

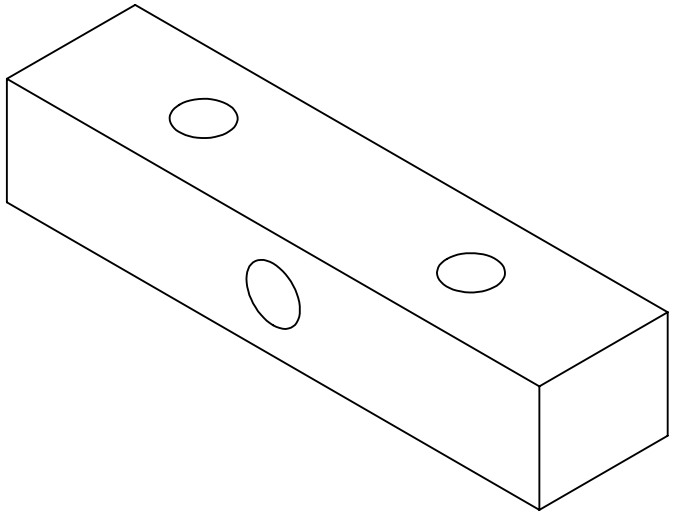

Metric thread according to ISO 6g / 6H				Finish: Free from burrs and undamaged			
UNLESS NOTED	Break corners maximum 0.5x45° / R maximum 0.5						Refer to STEP file is dimension is not noted
Dimensions in mm	0.5 - 3	3-6	6-30	30-120	120-400	400-1000	
Tol. acc. to ISO 2768-1 f	±0.05	±0.05	±0.1	±0.15	±0.2	±0.3	

Remark:

Revision	C	Date	13/12/2021
Drawn by	T. GRANDSAERT	Date	11/10/2021
Checked by	T. GRANDSAERT	Date	13/12/2021

MVP-PRT: SET BLOCK

Part name:

vitroTEM

MATERIAL: 6061 Alloy

WEIGHT: 14.64 g

DRW NO. 13-018235

SCALE:2:1

Size A4

Project.

SHEET 1 OF 1