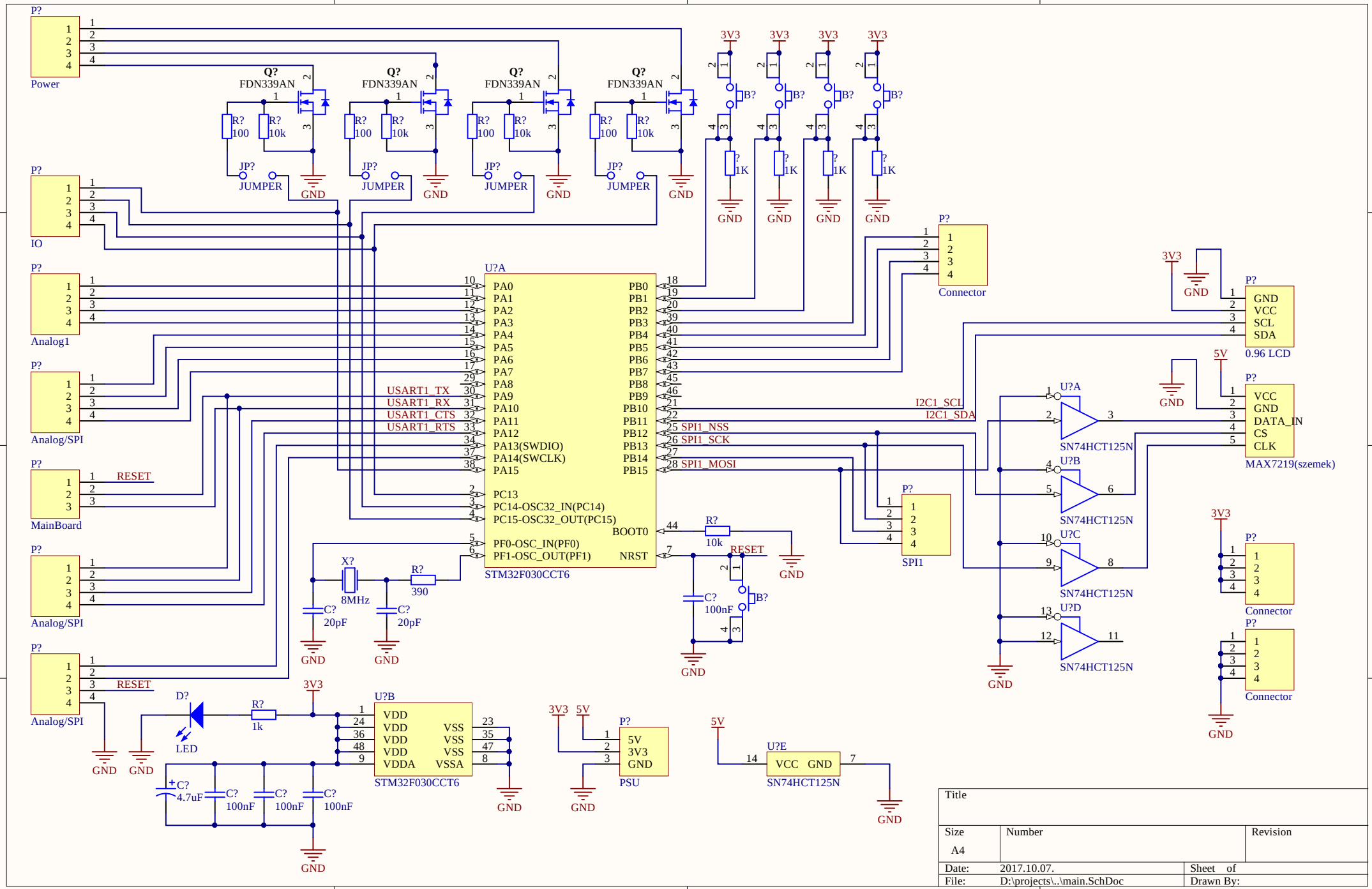

Title		
Size A4	Number	Revision
Date: 2017.10.07.	Sheet of	
File: D:\projects\..\main.SchDoc	Drawn By:	