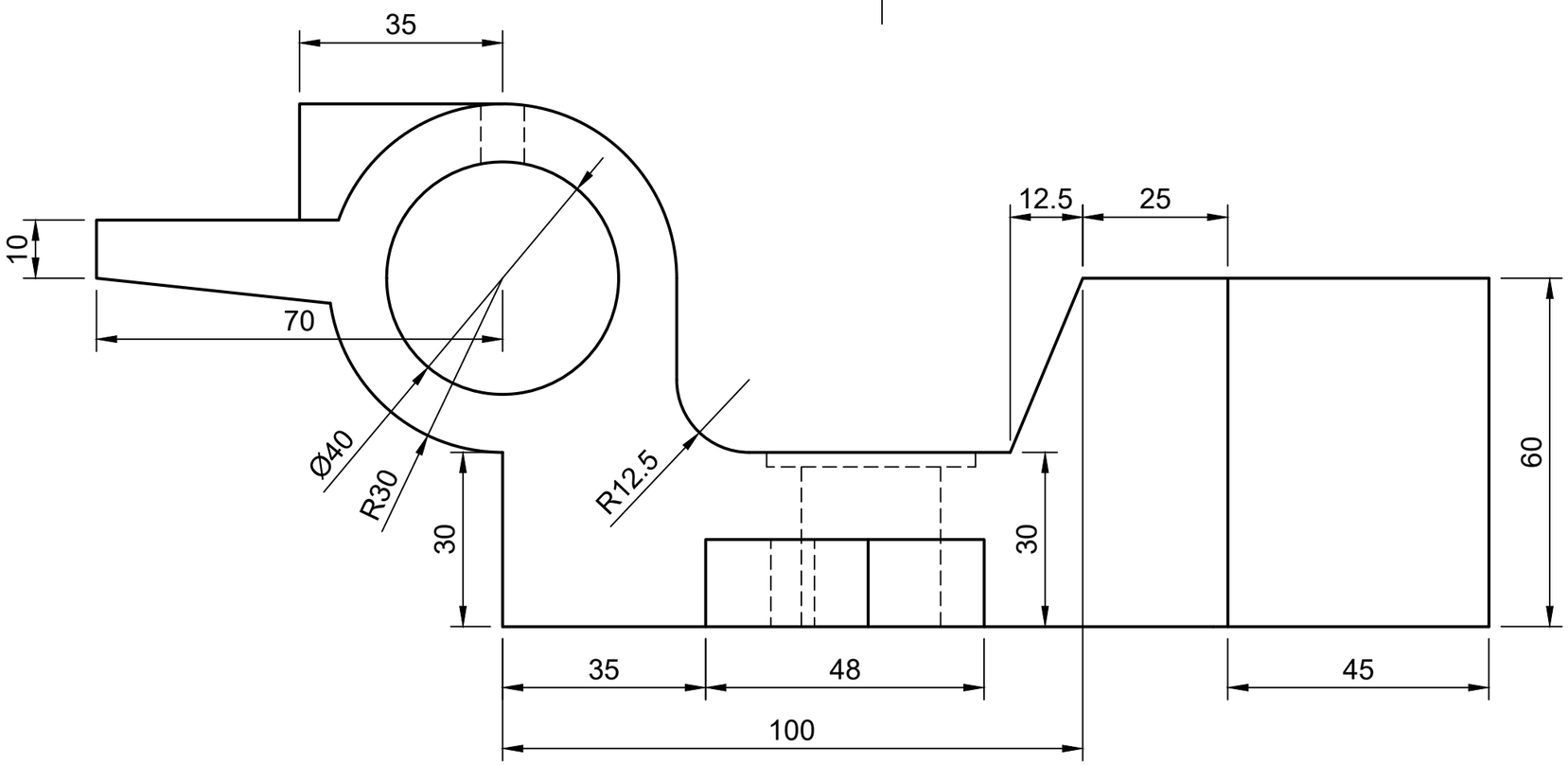

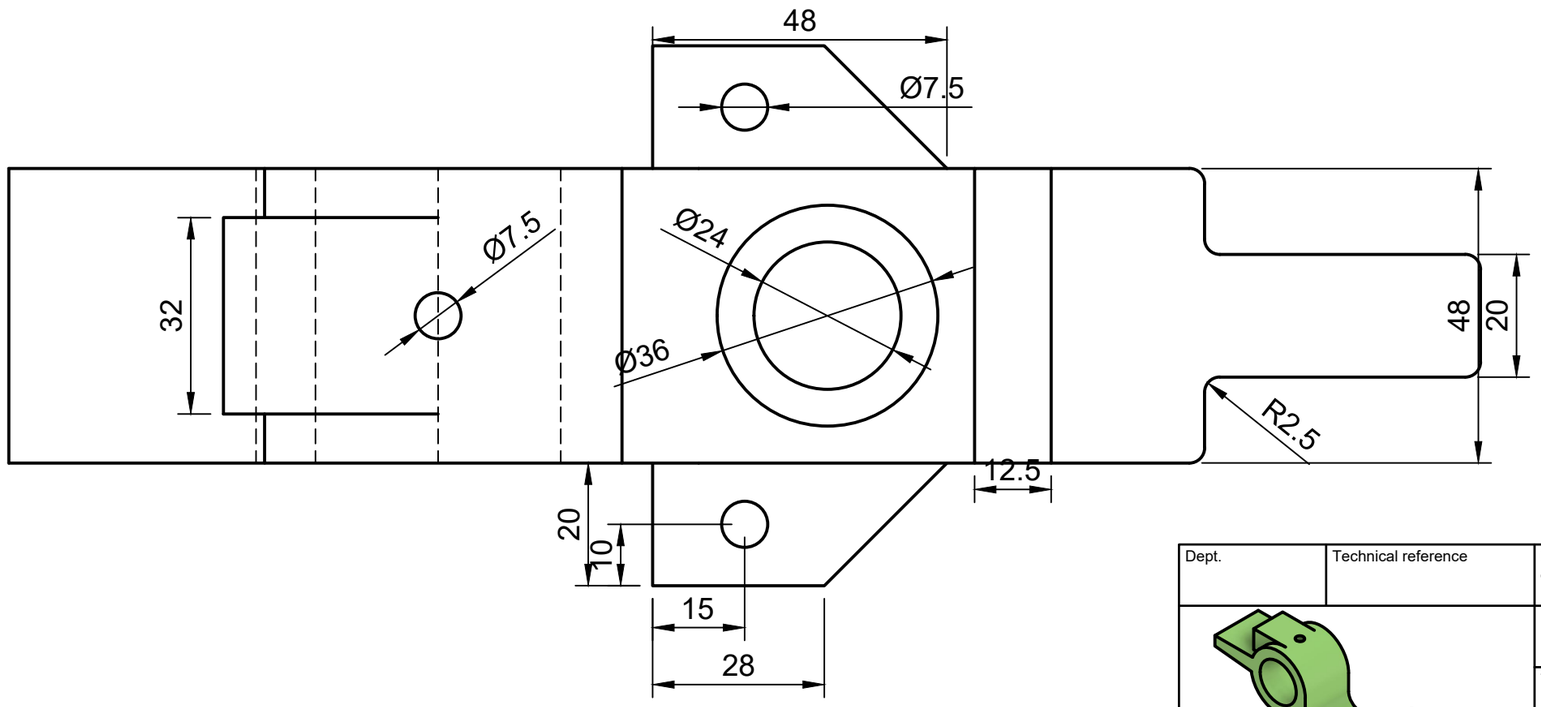

Dept.	Technical reference	Created by Tekumudi Vivek Sai Surya Chaitanya 6/23/2024	Approved by
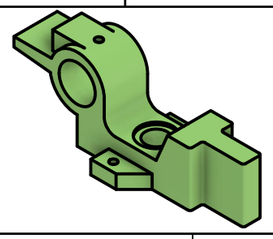		Document type	Document status
		Title Exercise-13	DWG No.
			Rev. / Date of issue / Sheet 1/1