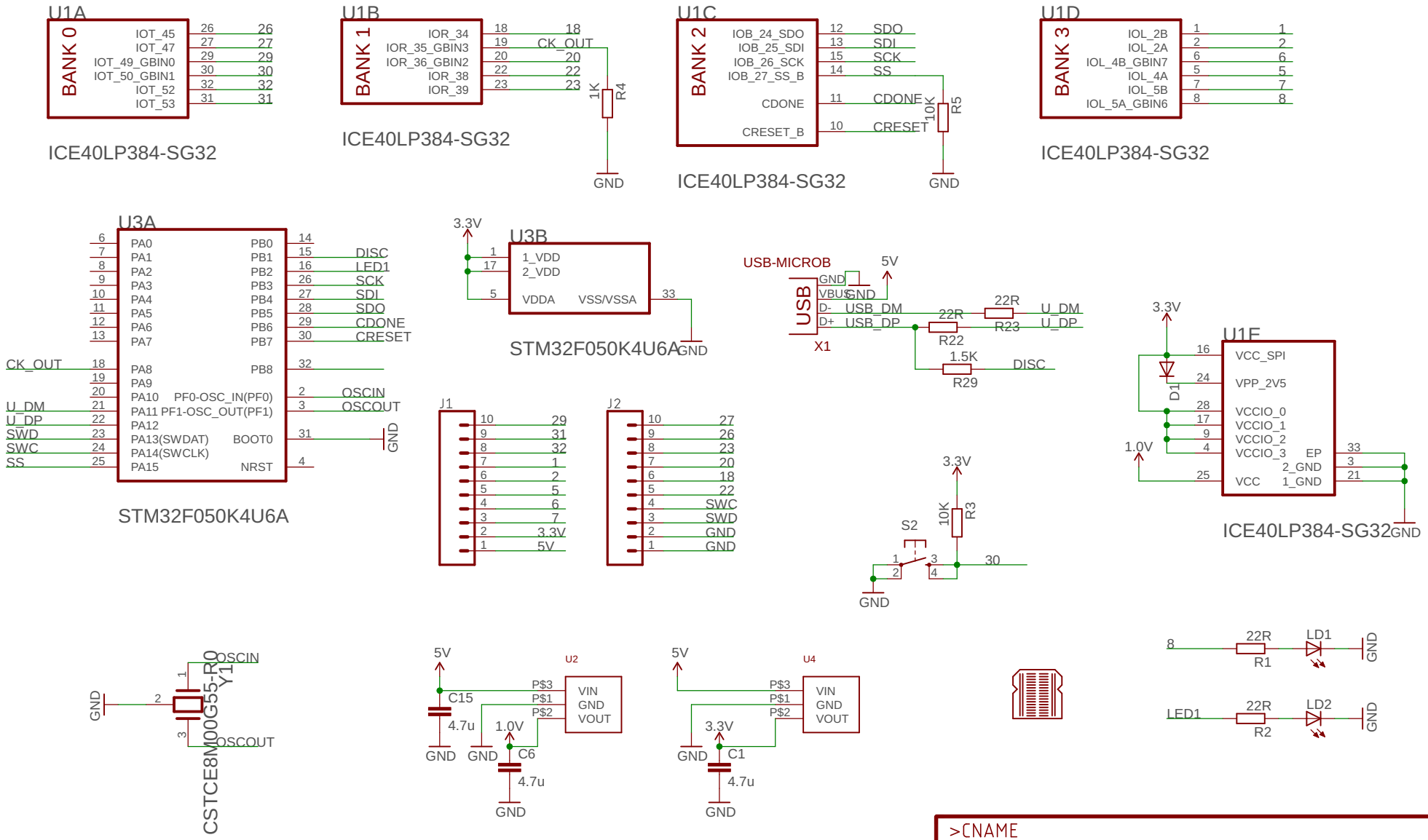
U1A
BANK 0
IOT_45
IOT_47
IOT_49_GBIN0
IOT_50_GBIN1
IOT_52
IOT_53
ICE40LP384-SG32
U1B
BANK 1
IOR_34
IOR_35_GBIN3
IOR_36_GBIN2
IOR_38
IOR_39
CK_OUT
1K
R4
GND
ICE40LP384-SG32
U1C
BANK 2
IOB_24_SDO
IOB_25_SDI
IOB_26_SCK
IOB_27_SS_B
CDONE
CRESET_B
SDO
SDI
SCK
SS
CDONE
CRESET
10K
R5
GND
ICE40LP384-SG32
U1D
BANK 3
IOL_2B
IOL_2A
IOL_4B_GBIN7
IOL_4A
IOL_5B
IOL_5A_GBIN6
ICE40LP384-SG32
U3A
PA0
PA1
PA2
PA3
PA4
PA5
PA6
PA7
PA8
PA9
PA10 PF0-OSC_IN(PF0)
PA11 PF1-OSC_OUT(PF1)
PA12
PA13(SWDAT)
PA14(SWCLK)
PA15
PB0
PB1
PB2
PB3
PB4
PB5
PB6
PB7
PB8
BOOT0
NRST
CK_OUT
U_DM
U_DP
SWD
SWC
SS
DISC
LED1
SCK
SDI
SDO
CDONE
CRESET
OSCIN
OSCOUT
GND
STM32F050K4U6A
3.3V
U3B
1_VDD
2_VDD
VDDA
VSS/VSSA
STM32F050K4U6A
GND
USB-MICROB
5V
USB
GND
VBUS
D-
D+
USB_DM
USB_DP
X1
22R
R22
22R
R23
U_DM
U_DP
1.5K
R29
DISC
J1
J2
3.3V
5V
SWC
SWD
GND
S2
10K
R3
30
3.3V
U1E
VCC_SPI
VPP_2V5
VCCIO_0
VCCIO_1
VCCIO_2
VCCIO_3
EP
2_GND
1_GND
VCC
D1
1.0V
ICE40LP384-SG32
GND
OSCIN
OSCOUT
Y1
CSTCE8M00G55-R0
U2
VIN
GND
VOUT
P$3
P$1
P$2
C15
4.7u
1.0V
C6
4.7u
U4
C1
4.7u
8
22R
R1
LD1
LED1
22R
R2
LD2
>CNAME
ice384
2019/1/4 0:05
>DESIGNER
Sheet: 1/1
Rev: >CREVISION