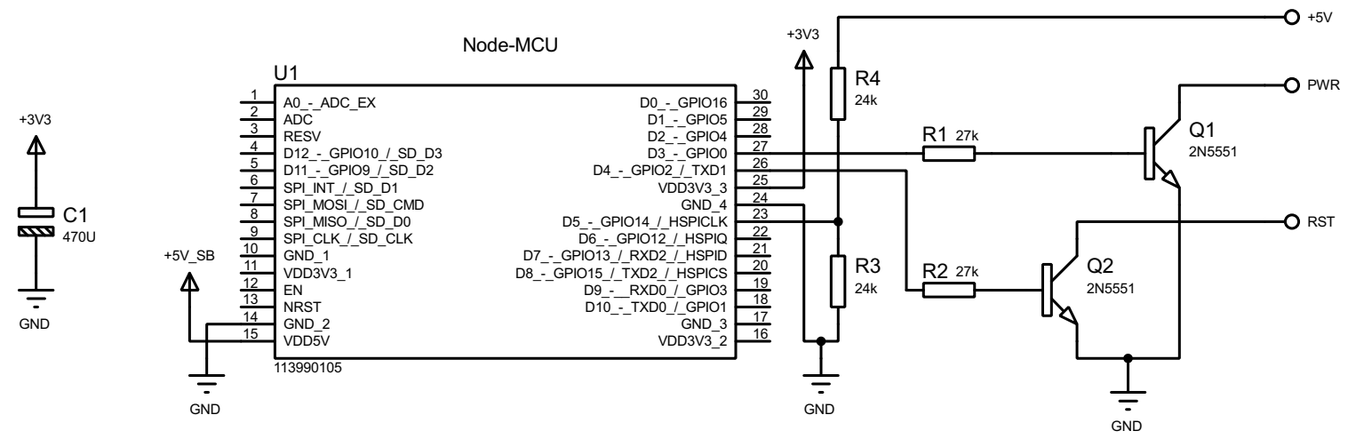

Wire color code

+5V -> orange
+5V_SB -> brown
PWR -> yellow
RST -> green
GND -> blue/purple

RST and PWR connect to the motherboard in parralel to the front panel switches.
+5V, +5V_SB and GND can be found on F_USB, F_AUDIO and other connectors on the motherboard.

DESIGN TITLE: **Ghetto BMC**	DATE: **19.9.2019 г.**
FILE NAME: **Ghetto_BMC.pdsprj**	PAGE: **1 of 1**
Ghetto BMC	
BY: **Vladimir Garistov** REV: **0**	TIME: **03:14:57 ч.**