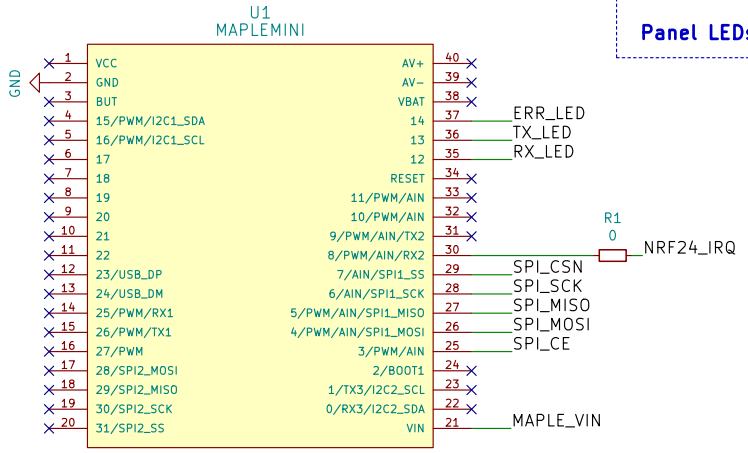

Maple mini STM32 board

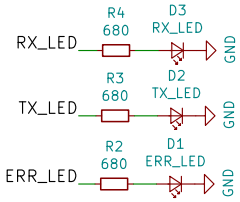

Panel LEDs

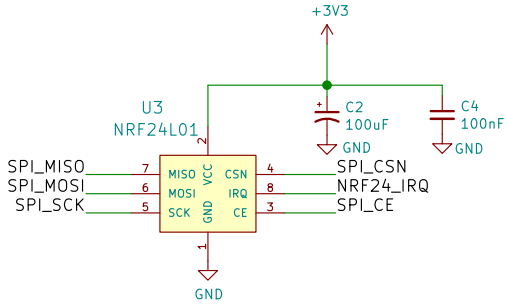

Radio module

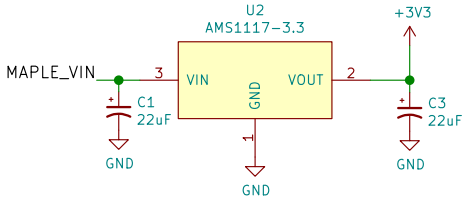

Radio module supply

MySensors Maple mini serial gateway

Sheet: /

File: serial_gw_maple_mini.sch

Title:

Size: A4	Date:	**Rev: 0.1**
KiCad E.D.A. kicad (2017-11-08 revision cd21218)-HEAD		Id: 1/1