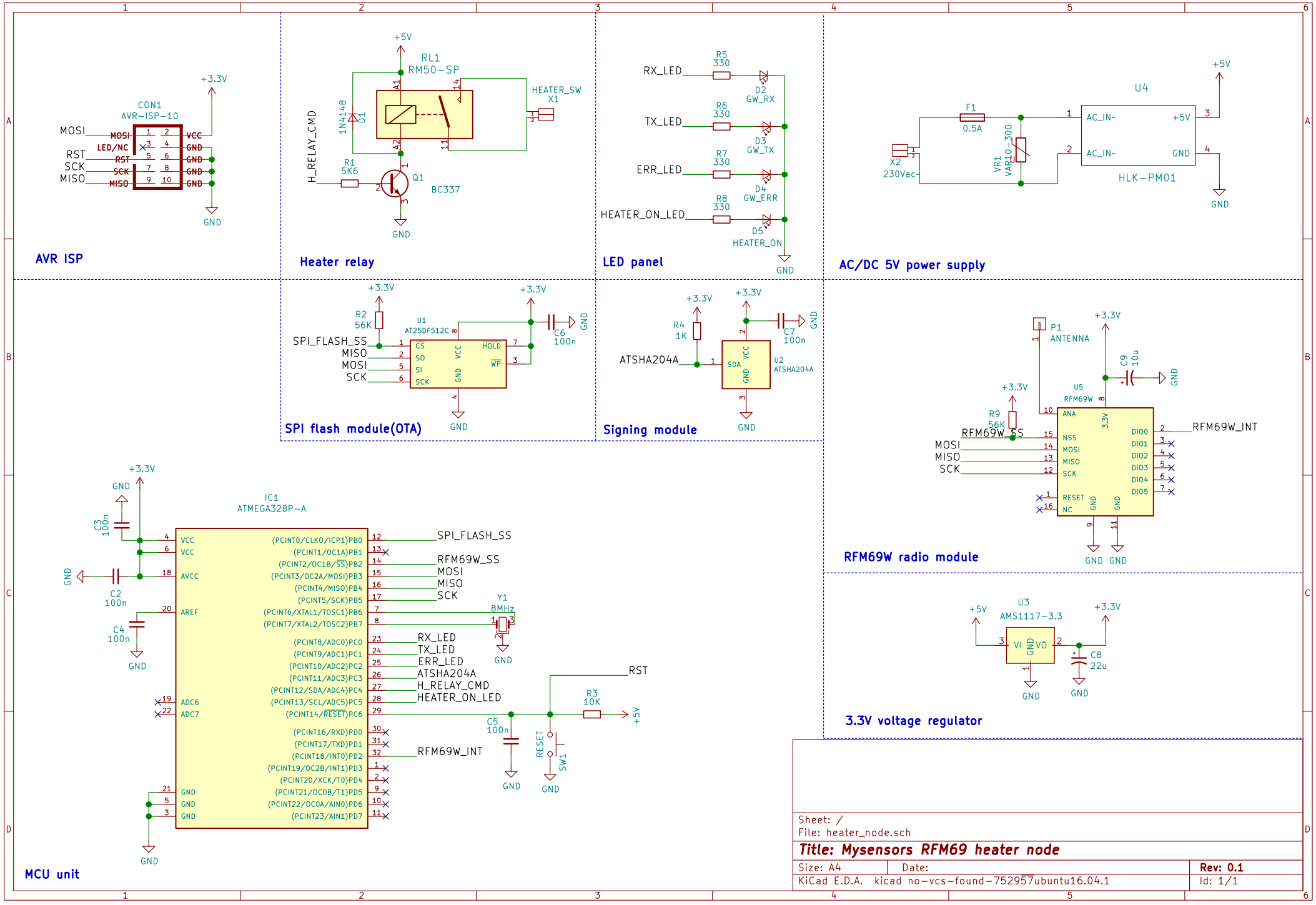
AVR ISP
CON1
AVR-ISP-10
MOSI
RST
SCK
MISO
LED/NC
VCC
GND
+3.3V
Heater relay
RL1
RM50-SP
HEATER_SW
X1
H_RELAY_CMD
1N4148
D1
R1
5K6
Q1
BC337
+5V
LED panel
RX_LED
TX_LED
ERR_LED
HEATER_ON_LED
R5
330
R6
330
R7
330
R8
330
D2
GW_RX
D3
GW_TX
D4
GW_ERR
D5
HEATER_ON
AC/DC 5V power supply
U4
F1
0.5A
X2
230Vac~
VR1
VAR10_300
AC_IN~
HLK-PM01
SPI flash module(OTA)
U1
AT25DF512C
R2
56K
SPI_FLASH_SS
C6
100n
Signing module
R4
1K
ATSHA204A
U2
ATSHA204A
C7
100n
RFM69W radio module
P1
ANTENNA
C9
10u
U5
RFM69W
R9
56K
RFM69W_SS
RFM69W_INT
3.3V voltage regulator
U3
AMS1117-3.3
C8
22u
MCU unit
IC1
ATMEGA328P-A
C3
100n
C2
100n
C4
100n
Y1
8MHz
RX_LED
TX_LED
ERR_LED
ATSHA204A
H_RELAY_CMD
HEATER_ON_LED
RST
R3
10K
C5
100n
RESET
SW1
Sheet: /
File: heater_node.sch
Title: Mysensors RFM69 heater node
Size: A4
Date:
Rev: 0.1
KiCad E.D.A. kicad no-vcs-found-752957ubuntu16.04.1
Id: 1/1