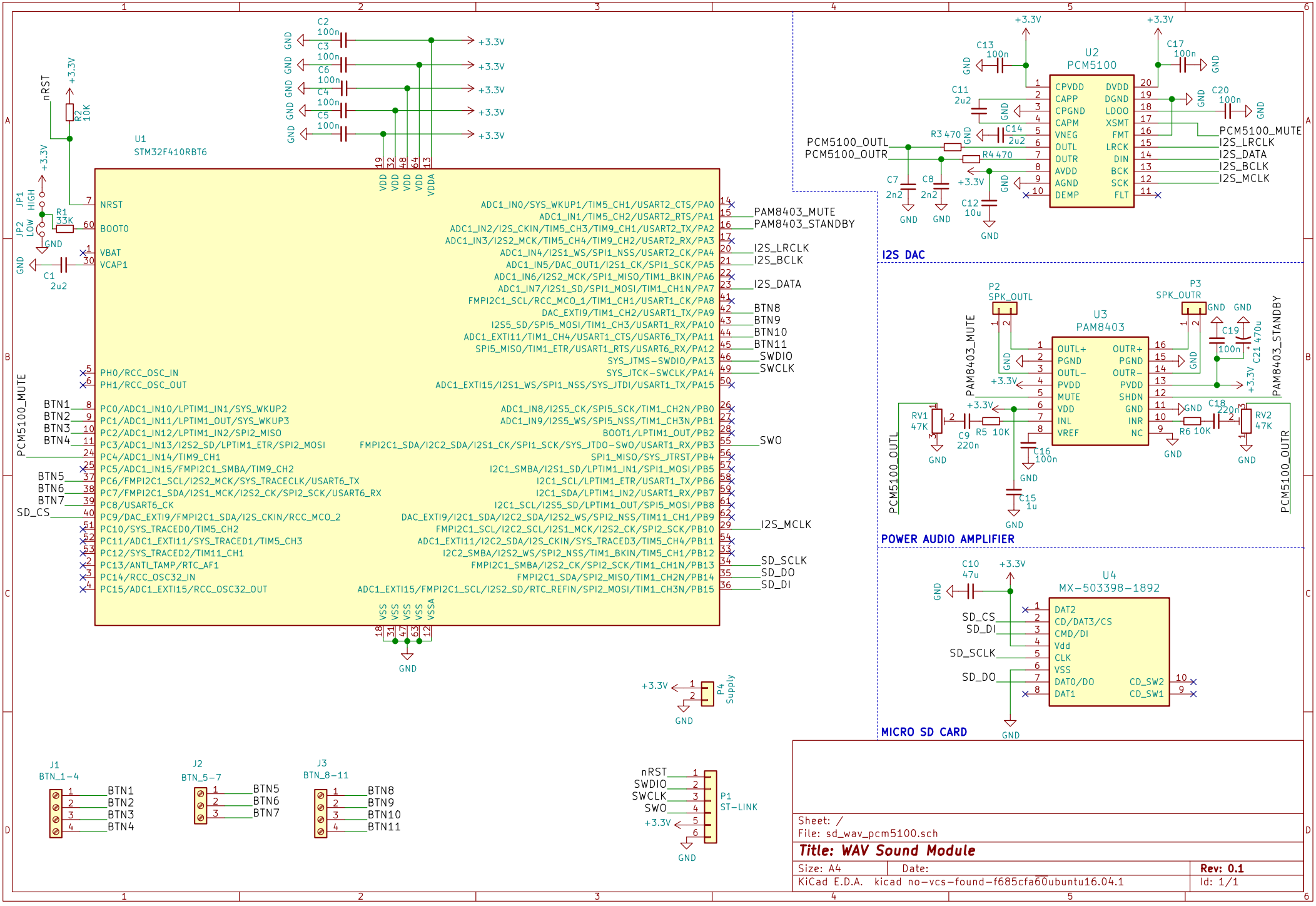
U1
STM32F410RBT6
NRST
BOOT0
VBAT
VCAP1
PH0/RCC_OSC_IN
PH1/RCC_OSC_OUT
PC0/ADC1_IN10/LPTIM1_IN1/SYS_WKUP2
PC1/ADC1_IN11/LPTIM1_OUT/SYS_WKUP3
PC2/ADC1_IN12/LPTIM1_IN2/SPI2_MISO
PC3/ADC1_IN13/I2S2_SD/LPTIM1_ETR/SPI2_MOSI
PC4/ADC1_IN14/TIM9_CH1
PC5/ADC1_IN15/FMPI2C1_SMBA/TIM9_CH2
PC6/FMPI2C1_SCL/I2S2_MCK/SYS_TRACECLK/USART6_TX
PC7/FMPI2C1_SDA/I2S1_MCK/I2S2_CK/SPI2_SCK/USART6_RX
PC8/USART6_CK
PC9/DAC_EXTI9/FMPI2C1_SDA/I2S_CKIN/RCC_MCO_2
PC10/SYS_TRACED0/TIM5_CH2
PC11/ADC1_EXTI11/SYS_TRACED1/TIM5_CH3
PC12/SYS_TRACED2/TIM11_CH1
PC13/ANTI_TAMP/RTC_AF1
PC14/RCC_OSC32_IN
PC15/ADC1_EXTI15/RCC_OSC32_OUT
ADC1_IN0/SYS_WKUP1/TIM5_CH1/USART2_CTS/PA0
ADC1_IN1/TIM5_CH2/USART2_RTS/PA1
ADC1_IN2/I2S_CKIN/TIM5_CH3/TIM9_CH1/USART2_TX/PA2
ADC1_IN3/I2S2_MCK/TIM5_CH4/TIM9_CH2/USART2_RX/PA3
ADC1_IN4/I2S1_WS/SPI1_NSS/USART2_CK/PA4
ADC1_IN5/DAC_OUT1/I2S1_CK/SPI1_SCK/PA5
ADC1_IN6/I2S2_MCK/SPI1_MISO/TIM1_BKIN/PA6
ADC1_IN7/I2S1_SD/SPI1_MOSI/TIM1_CH1N/PA7
FMPI2C1_SCL/RCC_MCO_1/TIM1_CH1/USART1_CK/PA8
DAC_EXTI9/TIM1_CH2/USART1_TX/PA9
I2S5_SD/SPI5_MOSI/TIM1_CH3/USART1_RX/PA10
ADC1_EXTI11/TIM1_CH4/USART1_CTS/USART6_TX/PA11
SPI5_MISO/TIM1_ETR/USART1_RTS/USART6_RX/PA12
SYS_JTMS-SWDIO/PA13
SYS_JTCK-SWCLK/PA14
ADC1_EXTI15/I2S1_WS/SPI1_NSS/SYS_JTDI/USART1_TX/PA15
ADC1_IN8/I2S5_CK/SPI5_SCK/TIM1_CH2N/PB0
ADC1_IN9/I2S5_WS/SPI5_NSS/TIM1_CH3N/PB1
BOOT1/LPTIM1_OUT/PB2
FMPI2C1_SDA/I2C2_SDA/I2S1_CK/SPI1_SCK/SYS_JTDO-SWO/USART1_RX/PB3
SPI1_MISO/SYS_JTRST/PB4
I2C1_SMBA/I2S1_SD/LPTIM1_IN1/SPI1_MOSI/PB5
I2C1_SCL/LPTIM1_ETR/USART1_TX/PB6
I2C1_SDA/LPTIM1_IN2/USART1_RX/PB7
I2C1_SCL/I2S5_SD/LPTIM1_OUT/SPI5_MOSI/PB8
DAC_EXTI9/I2C1_SDA/I2C2_SDA/I2S2_WS/SPI2_NSS/TIM11_CH1/PB9
FMPI2C1_SCL/I2C2_SCL/I2S1_MCK/I2S2_CK/SPI2_SCK/PB10
ADC1_EXTI11/I2C2_SDA/I2S_CKIN/SYS_TRACED3/TIM5_CH4/PB11
I2C2_SMBA/I2S2_WS/SPI2_NSS/TIM1_BKIN/TIM5_CH1/PB12
FMPI2C1_SMBA/I2S2_CK/SPI2_SCK/TIM1_CH1N/PB13
FMPI2C1_SDA/SPI2_MISO/TIM1_CH2N/PB14
ADC1_EXTI15/FMPI2C1_SCL/I2S2_SD/RTC_REFIN/SPI2_MOSI/TIM1_CH3N/PB15
VDD VDD VDD VDD VDDA
VSS VSS VSS VSS VSSA
PAM8403_MUTE
PAM8403_STANDBY
I2S_LRCLK
I2S_BCLK
I2S_DATA
BTN8
BTN9
BTN10
BTN11
SWDIO
SWCLK
SWO
I2S_MCLK
SD_SCLK
SD_DO
SD_DI
PCM5100_MUTE
BTN1
BTN2
BTN3
BTN4
BTN5
BTN6
BTN7
SD_CS
nRST
R2 10K
JP1 HIGH
JP2 LOW
R1 33K
C1 2u2
C2 100n
C3 100n
C6 100n
C4 100n
C5 100n
+3.3V
GND
U2
PCM5100
CPVDD
CAPP
CPGND
CAPM
VNEG
OUTL
OUTR
AVDD
AGND
DEMP
DVDD
DGND
LDOO
XSMT
FMT
LRCK
DIN
BCK
SCK
FLT
C13 100n
C11 2u2
C14 2u2
R3 470
R4 470
C7 2n2
C8 2n2
C12 10u
C17 100n
C20 100n
PCM5100_OUTL
PCM5100_OUTR
I2S DAC
U3
PAM8403
OUTL+
PGND
OUTL-
PVDD
MUTE
VDD
INL
VREF
OUTR+
PGND
OUTR-
PVDD
SHDN
GND
INR
NC
P2
SPK_OUTL
P3
SPK_OUTR
C19 100n
C21 470u
C18 220n
RV1 47K
RV2 47K
C9 220n
R5 10K
R6 10K
C16 100n
C15 1u
POWER AUDIO AMPLIFIER
U4
MX-503398-1892
DAT2
CD/DAT3/CS
CMD/DI
Vdd
CLK
VSS
DAT0/DO
DAT1
CD_SW2
CD_SW1
C10 47u
MICRO SD CARD
P4
Supply
J1
BTN_1-4
J2
BTN_5-7
J3
BTN_8-11
P1
ST-LINK
Sheet: /
File: sd_wav_pcm5100.sch
Title: WAV Sound Module
Size: A4
Date:
Rev: 0.1
KiCad E.D.A. kicad no-vcs-found-f685cfa60ubuntu16.04.1
Id: 1/1