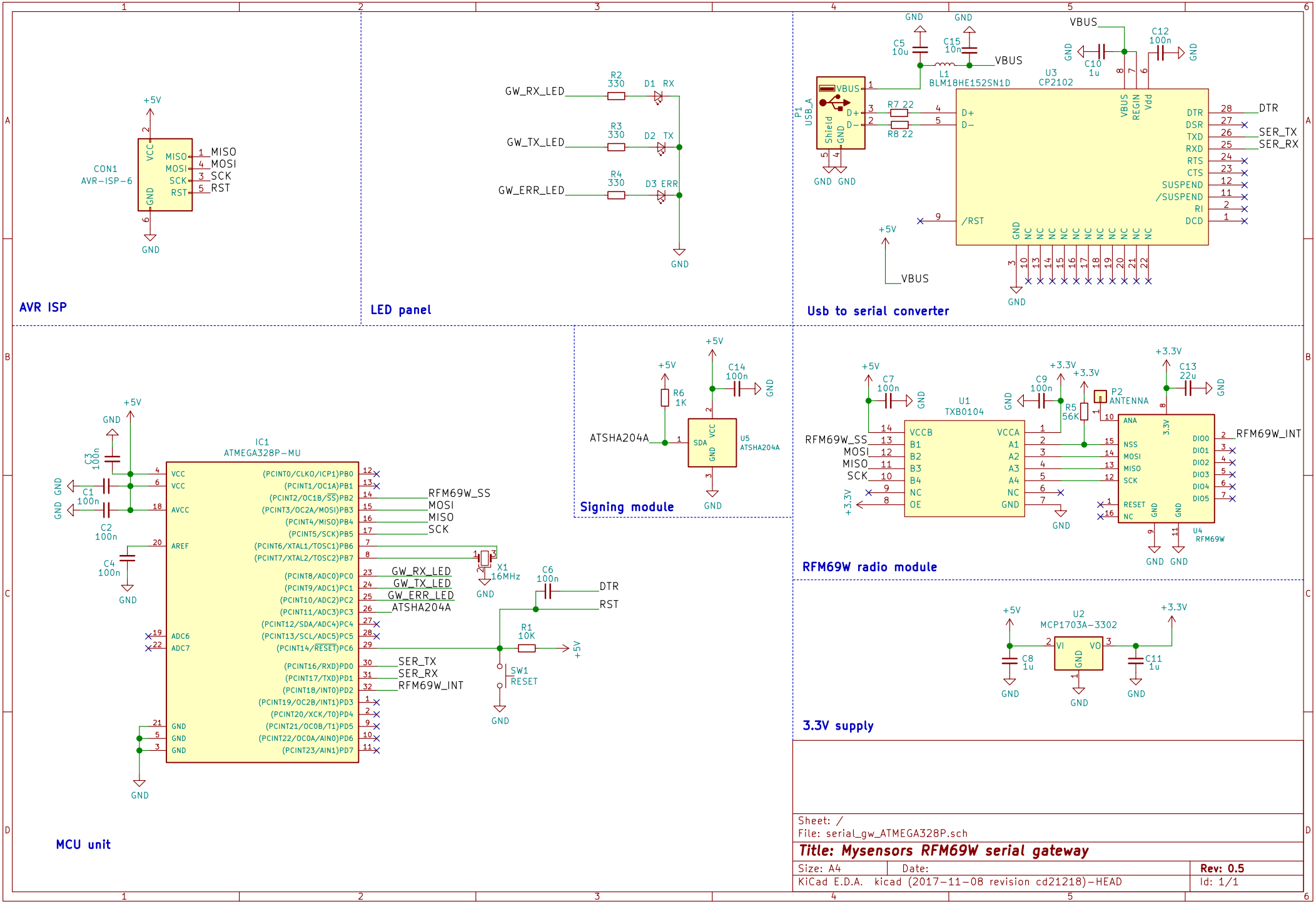
AVR ISP
CON1
AVR-ISP-6
+5V
VCC
MISO
MOSI
SCK
RST
GND
LED panel
GW_RX_LED
GW_TX_LED
GW_ERR_LED
R2 330
R3 330
R4 330
D1 RX
D2 TX
D3 ERR
Usb to serial converter
P1
USB_A
VBUS
D+
D-
Shield
GND
C5 10u
C15 10n
L1
BLM18HE152SN1D
U3
CP2102
C10 1u
C12 100n
R7 22
R8 22
REGIN
Vdd
DTR
DSR
TXD
RXD
RTS
CTS
SUSPEND
/SUSPEND
RI
DCD
/RST
SER_TX
SER_RX
Signing module
ATSHA204A
R6 1K
C14 100n
U5
ATSHA204A
SDA
VCC
RFM69W radio module
U1
TXB0104
VCCB
VCCA
C7 100n
C9 100n
R5 56K
P2
ANTENNA
C13 22u
+3.3V
RFM69W_SS
MOSI
MISO
SCK
RFM69W_INT
ANA
NSS
DIO0
DIO1
DIO2
DIO3
DIO4
DIO5
RESET
U4
RFM69W
3.3V supply
U2
MCP1703A-3302
VI
VO
C8 1u
C11 1u
MCU unit
IC1
ATMEGA328P-MU
C3 100n
C1 100n
C2 100n
C4 100n
X1 16MHz
C6 100n
R1 10K
SW1
RESET
DTR
RST
GW_RX_LED
GW_TX_LED
GW_ERR_LED
ATSHA204A
SER_TX
SER_RX
RFM69W_INT
(PCINT0/CLKO/ICP1)PB0
(PCINT1/OC1A)PB1
(PCINT2/OC1B/SS)PB2
(PCINT3/OC2A/MOSI)PB3
(PCINT4/MISO)PB4
(PCINT5/SCK)PB5
(PCINT6/XTAL1/TOSC1)PB6
(PCINT7/XTAL2/TOSC2)PB7
(PCINT8/ADC0)PC0
(PCINT9/ADC1)PC1
(PCINT10/ADC2)PC2
(PCINT11/ADC3)PC3
(PCINT12/SDA/ADC4)PC4
(PCINT13/SCL/ADC5)PC5
(PCINT14/RESET)PC6
(PCINT16/RXD)PD0
(PCINT17/TXD)PD1
(PCINT18/INT0)PD2
(PCINT19/OC2B/INT1)PD3
(PCINT20/XCK/T0)PD4
(PCINT21/OC0B/T1)PD5
(PCINT22/OC0A/AIN0)PD6
(PCINT23/AIN1)PD7
VCC
AVCC
AREF
ADC6
ADC7
Sheet: /
File: serial_gw_ATMEGA328P.sch
Title: Mysensors RFM69W serial gateway
Size: A4
Date:
Rev: 0.5
KiCad E.D.A. kicad (2017-11-08 revision cd21218)-HEAD
Id: 1/1