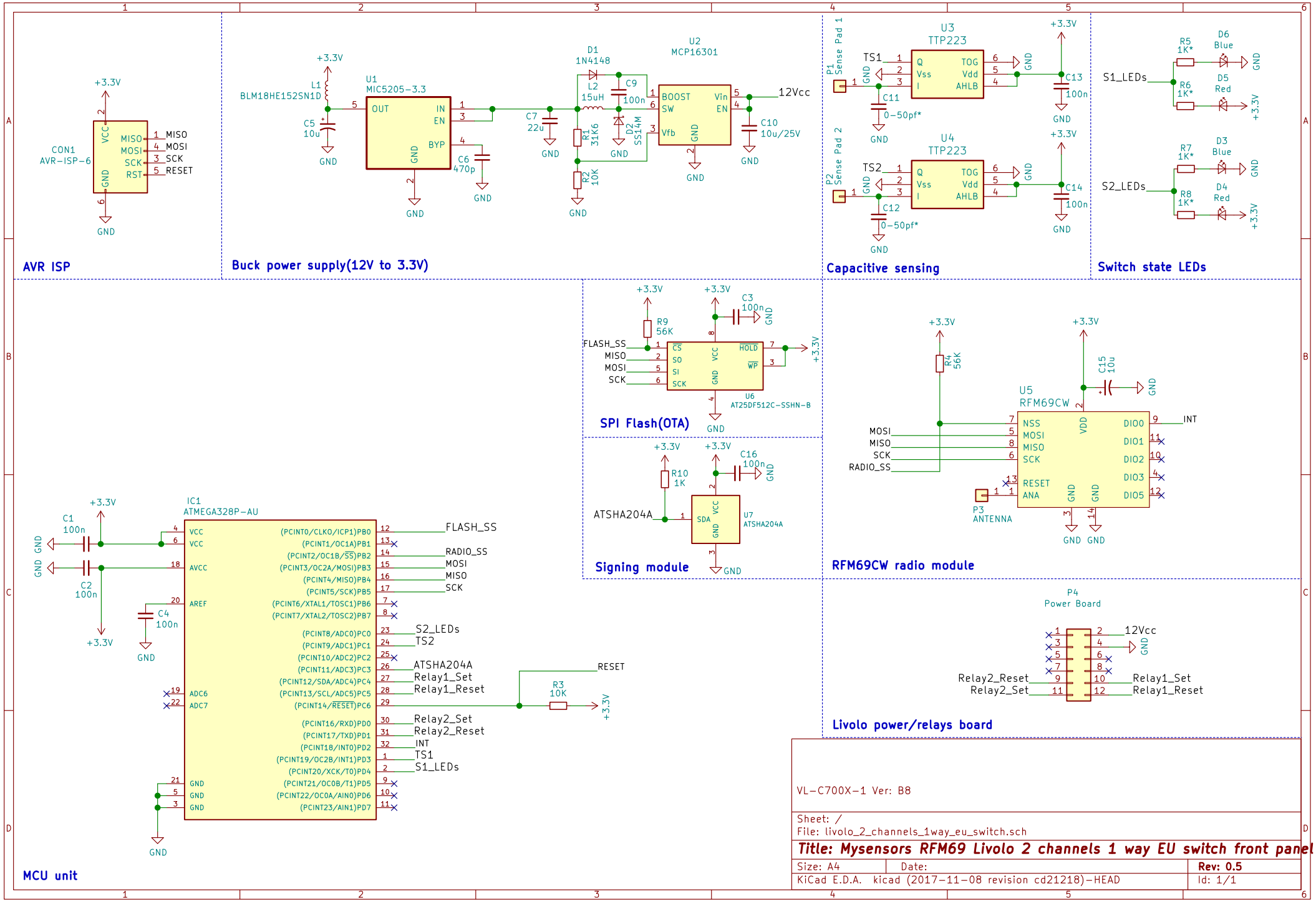
AVR ISP
CON1
AVR-ISP-6
MISO
MOSI
SCK
RST
Buck power supply(12V to 3.3V)
U1
MIC5205-3.3
L1
BLM18HE152SN1D
C5
10u
C6
470p
C7
22u
D1
1N4148
L2
15uH
C9
100n
D2
SS14M
R1
31K6
R2
10K
U2
MCP16301
BOOST
SW
Vfb
Vin
EN
C10
10u/25V
12Vcc
Capacitive sensing
U3
TTP223
U4
TTP223
TS1
TS2
P1
Sense Pad 1
P2
Sense Pad 2
C11
0-50pf*
C12
0-50pf*
C13
100n
C14
100n
Switch state LEDs
S1_LEDs
S2_LEDs
R5
1K*
R6
1K*
R7
1K*
R8
1K*
D6
Blue
D5
Red
D3
Blue
D4
Red
SPI Flash(OTA)
R9
56K
C3
100n
FLASH_SS
MISO
MOSI
SCK
U6
AT25DF512C-SSHN-B
Signing module
R10
1K
C16
100n
ATSHA204A
U7
ATSHA204A
RFM69CW radio module
R4
56K
C15
10u
U5
RFM69CW
MOSI
MISO
SCK
RADIO_SS
INT
P3
ANTENNA
MCU unit
IC1
ATMEGA328P-AU
C1
100n
C2
100n
C4
100n
FLASH_SS
RADIO_SS
MOSI
MISO
SCK
S2_LEDs
TS2
ATSHA204A
Relay1_Set
Relay1_Reset
RESET
R3
10K
Relay2_Set
Relay2_Reset
INT
TS1
S1_LEDs
Livolo power/relays board
P4
Power Board
12Vcc
Relay2_Reset
Relay2_Set
Relay1_Set
Relay1_Reset
VL-C700X-1 Ver: B8
Sheet: /
File: livolo_2_channels_1way_eu_switch.sch
Title: Mysensors RFM69 Livolo 2 channels 1 way EU switch front panel
Size: A4
Date:
Rev: 0.5
KiCad E.D.A. kicad (2017-11-08 revision cd21218)-HEAD
Id: 1/1