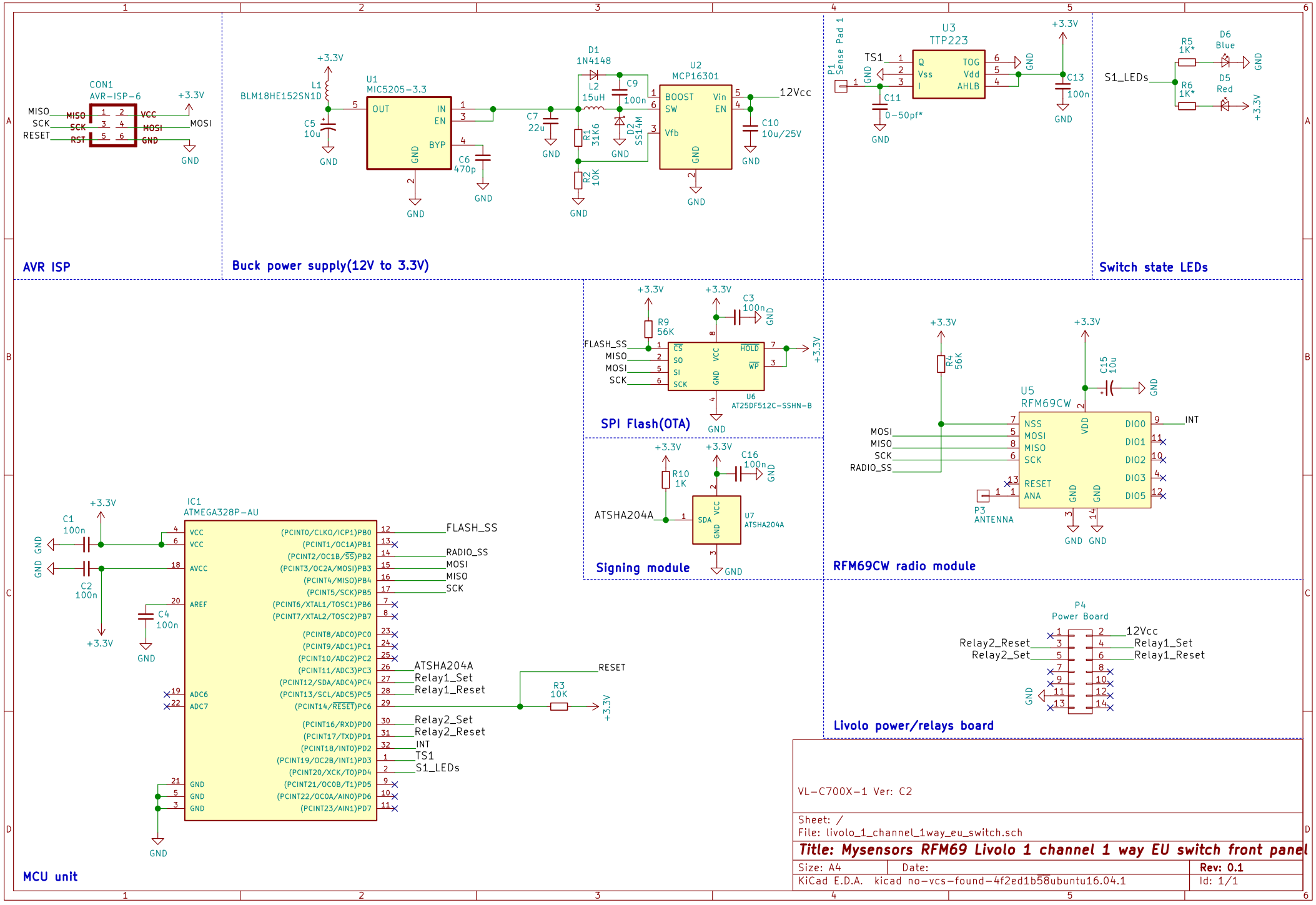
AVR ISP
CON1
AVR-ISP-6
MISO
SCK
RESET
VCC
MOSI
GND
+3.3V
Buck power supply(12V to 3.3V)
U1
MIC5205-3.3
OUT
IN
EN
BYP
L1
BLM18HE152SN1D
C5
10u
C6
470p
C7
22u
D1
1N4148
L2
15uH
C9
100n
D2
SS14M
R1
31K6
R2
10K
U2
MCP16301
BOOST
SW
Vfb
Vin
EN
12Vcc
C10
10u/25V
U3
TTP223
TS1
Q
Vss
I
TOG
Vdd
AHLB
P1
Sense Pad 1
C11
0-50pf*
C13
100n
Switch state LEDs
S1_LEDs
R5
1K*
R6
1K*
D6
Blue
D5
Red
SPI Flash(OTA)
FLASH_SS
MISO
MOSI
SCK
R9
56K
C3
100n
CS
SO
SI
SCK
VCC
GND
HOLD
WP
U6
AT25DF512C-SSHN-B
Signing module
ATSHA204A
R10
1K
C16
100n
SDA
U7
ATSHA204A
RFM69CW radio module
R4
56K
C15
10u
U5
RFM69CW
NSS
MOSI
MISO
SCK
RESET
ANA
VDD
DIO0
DIO1
DIO2
DIO3
DIO5
INT
RADIO_SS
P3
ANTENNA
MCU unit
IC1
ATMEGA328P-AU
C1
100n
C2
100n
C4
100n
VCC
AVCC
AREF
ADC6
ADC7
GND
(PCINT0/CLKO/ICP1)PB0
(PCINT1/OC1A)PB1
(PCINT2/OC1B/SS)PB2
(PCINT3/OC2A/MOSI)PB3
(PCINT4/MISO)PB4
(PCINT5/SCK)PB5
(PCINT6/XTAL1/TOSC1)PB6
(PCINT7/XTAL2/TOSC2)PB7
(PCINT8/ADC0)PC0
(PCINT9/ADC1)PC1
(PCINT10/ADC2)PC2
(PCINT11/ADC3)PC3
(PCINT12/SDA/ADC4)PC4
(PCINT13/SCL/ADC5)PC5
(PCINT14/RESET)PC6
(PCINT16/RXD)PD0
(PCINT17/TXD)PD1
(PCINT18/INT0)PD2
(PCINT19/OC2B/INT1)PD3
(PCINT20/XCK/T0)PD4
(PCINT21/OC0B/T1)PD5
(PCINT22/OC0A/AIN0)PD6
(PCINT23/AIN1)PD7
FLASH_SS
RADIO_SS
MOSI
MISO
SCK
ATSHA204A
Relay1_Set
Relay1_Reset
Relay2_Set
Relay2_Reset
INT
TS1
S1_LEDs
RESET
R3
10K
Livolo power/relays board
P4
Power Board
12Vcc
Relay2_Reset
Relay2_Set
Relay1_Set
Relay1_Reset
VL-C700X-1 Ver: C2
Sheet: /
File: livolo_1_channel_1way_eu_switch.sch
Title: Mysensors RFM69 Livolo 1 channel 1 way EU switch front panel
Size: A4
Date:
Rev: 0.1
KiCad E.D.A. kicad no-vcs-found-4f2ed1b58ubuntu16.04.1
Id: 1/1