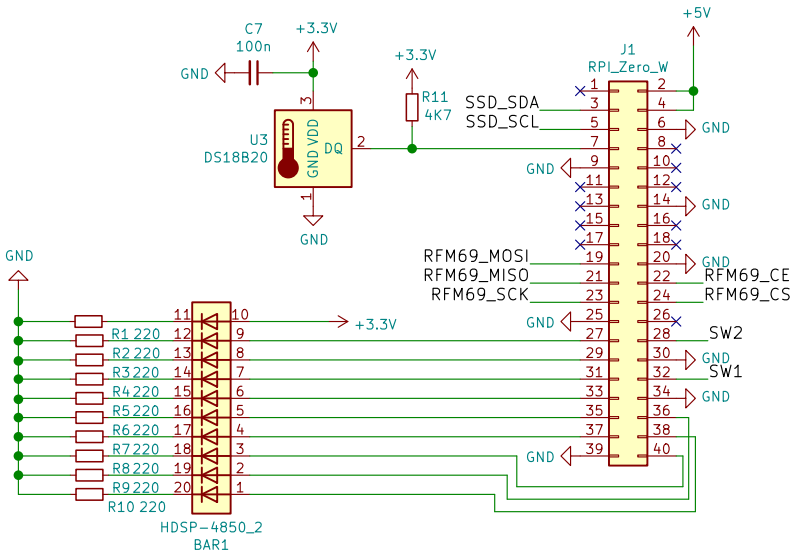

Raspberry PI Zero W Board/LED Bargraph/Temperature Sensor

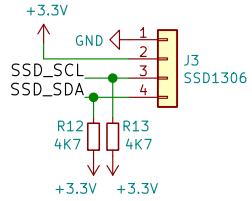

OLED Display(128x32)

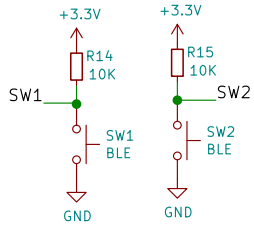

Switches

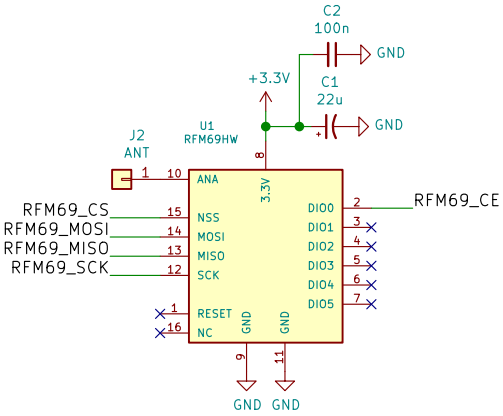

RFM69W Radio Module

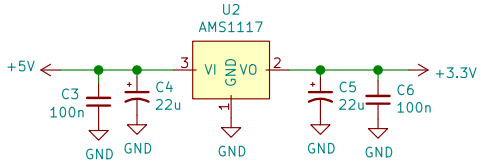

5V to 3.3V Voltage Regulator

Sheet: /
File: rpi_zero.sch

Title: Raspberry Pi Zero W MySensors-BLE

Size: A4	Date:	Rev: 0.1
KiCad E.D.A. kicad (2017-11-08 revision cd21218)-HEAD		Id: 1/1