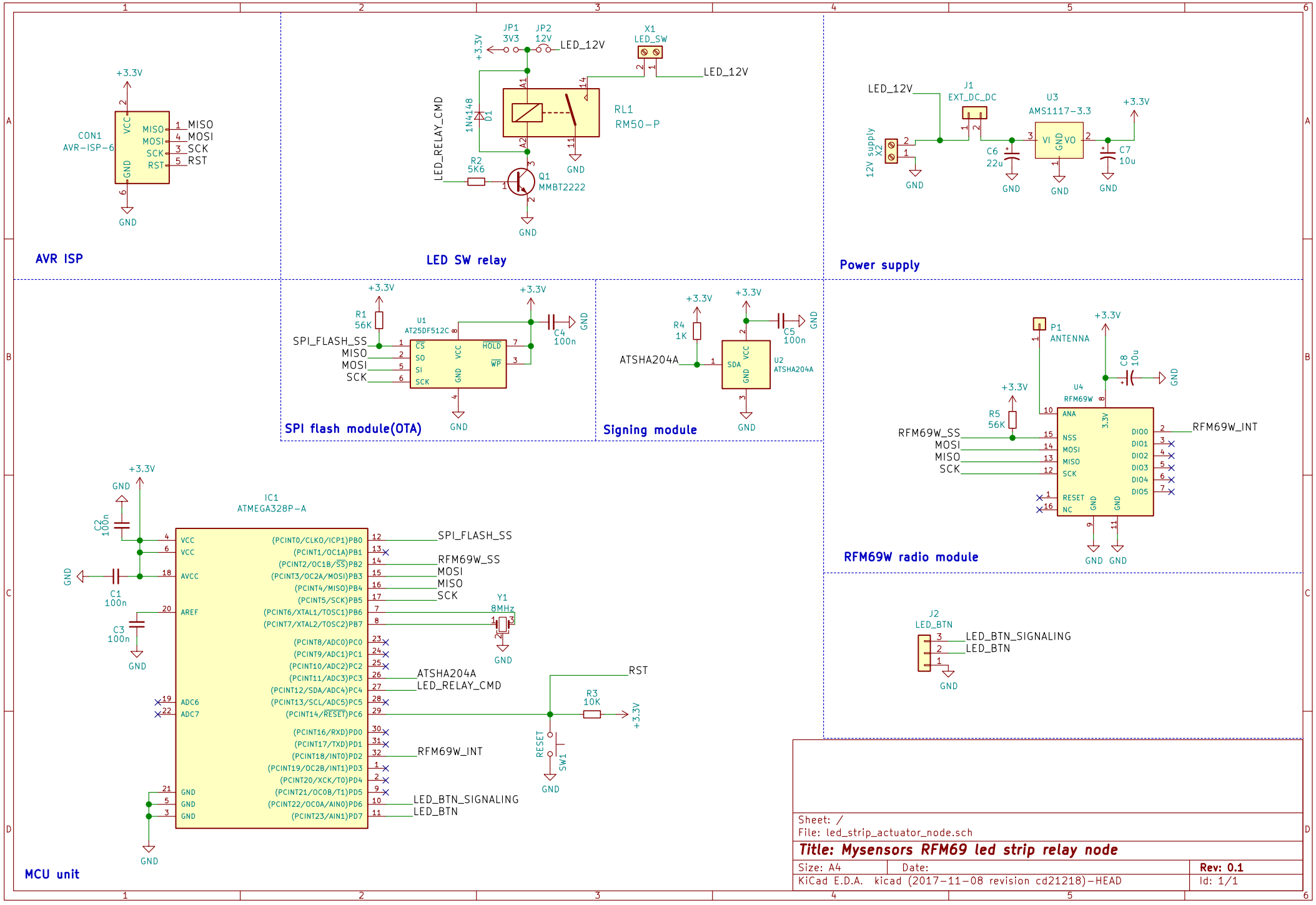
AVR ISP
CON1
AVR-ISP-6
+3.3V
VCC
GND
MISO
MOSI
SCK
RST
LED SW relay
JP1
3V3
JP2
12V
LED_12V
X1
LED_SW
RL1
RM50-P
1N4148
D1
LED_RELAY_CMD
R2
5K6
Q1
MMBT2222
Power supply
J1
EXT_DC_DC
U3
AMS1117-3.3
VI
VO
12V supply
X2
C6
22u
C7
10u
SPI flash module(OTA)
U1
AT25DF512C
R1
56K
SPI_FLASH_SS
CS
SO
SI
HOLD
WP
C4
100n
Signing module
R4
1K
ATSHA204A
SDA
U2
ATSHA204A
C5
100n
RFM69W radio module
P1
ANTENNA
C8
10u
U4
RFM69W
R5
56K
RFM69W_SS
NSS
RFM69W_INT
DIO0
DIO1
DIO2
DIO3
DIO4
DIO5
RESET
NC
ANA
MCU unit
IC1
ATMEGA328P-A
C2
100n
C1
100n
C3
100n
Y1
8MHz
(PCINT0/CLKO/ICP1)PB0
(PCINT1/OC1A)PB1
(PCINT2/OC1B/SS)PB2
(PCINT3/OC2A/MOSI)PB3
(PCINT4/MISO)PB4
(PCINT5/SCK)PB5
(PCINT6/XTAL1/TOSC1)PB6
(PCINT7/XTAL2/TOSC2)PB7
(PCINT8/ADC0)PC0
(PCINT9/ADC1)PC1
(PCINT10/ADC2)PC2
(PCINT11/ADC3)PC3
(PCINT12/SDA/ADC4)PC4
(PCINT13/SCL/ADC5)PC5
(PCINT14/RESET)PC6
(PCINT16/RXD)PD0
(PCINT17/TXD)PD1
(PCINT18/INT0)PD2
(PCINT19/OC2B/INT1)PD3
(PCINT20/XCK/T0)PD4
(PCINT21/OC0B/T1)PD5
(PCINT22/OC0A/AIN0)PD6
(PCINT23/AIN1)PD7
AVCC
AREF
ADC6
ADC7
R3
10K
SW1
J2
LED_BTN
LED_BTN_SIGNALING
LED_BTN
Sheet: /
File: led_strip_actuator_node.sch
Title: Mysensors RFM69 led strip relay node
Size: A4
Date:
Rev: 0.1
KiCad E.D.A. kicad (2017-11-08 revision cd21218)-HEAD
Id: 1/1