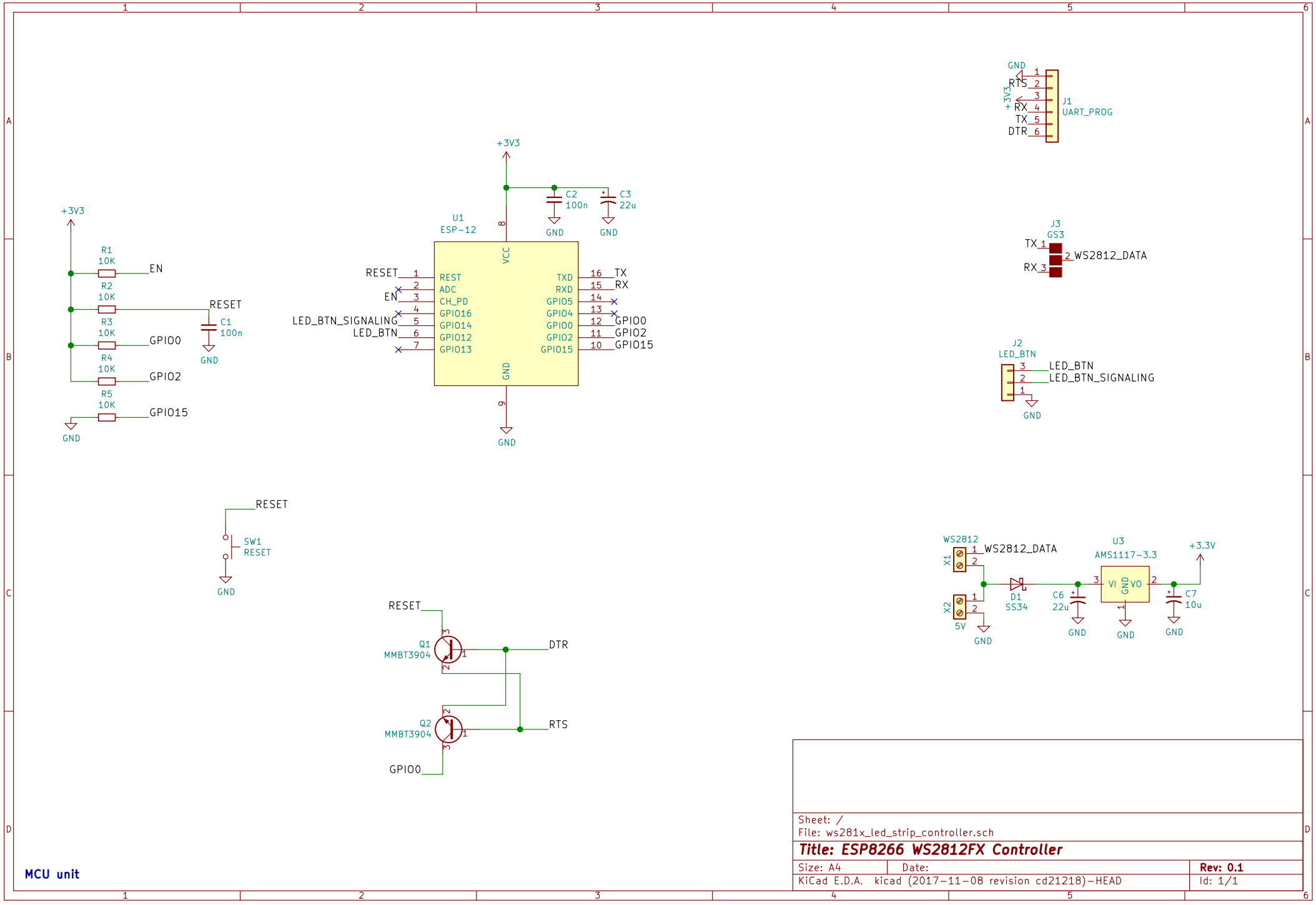
+3V3
R1
10K
EN
R2
10K
RESET
R3
10K
GPIO0
R4
10K
GPIO2
R5
10K
GPIO15
GND
C1
100n
U1
ESP-12
VCC
REST
ADC
CH_PD
GPIO16
GPIO14
GPIO12
GPIO13
TXD
RXD
GPIO5
GPIO4
GPIO0
GPIO2
GPIO15
LED_BTN_SIGNALING
LED_BTN
TX
RX
C2
100n
C3
22u
J1
UART_PROG
RTS
J3
GS3
WS2812_DATA
J2
LED_BTN
SW1
RESET
Q1
MMBT3904
Q2
MMBT3904
DTR
RTS
WS2812
X1
X2
5V
D1
SS34
C6
22u
U3
AMS1117-3.3
VI
VO
C7
10u
+3.3V
MCU unit
Sheet: /
File: ws281x_led_strip_controller.sch
Title: ESP8266 WS2812FX Controller
Size: A4
Date:
Rev: 0.1
KiCad E.D.A. kicad (2017-11-08 revision cd21218)-HEAD
Id: 1/1