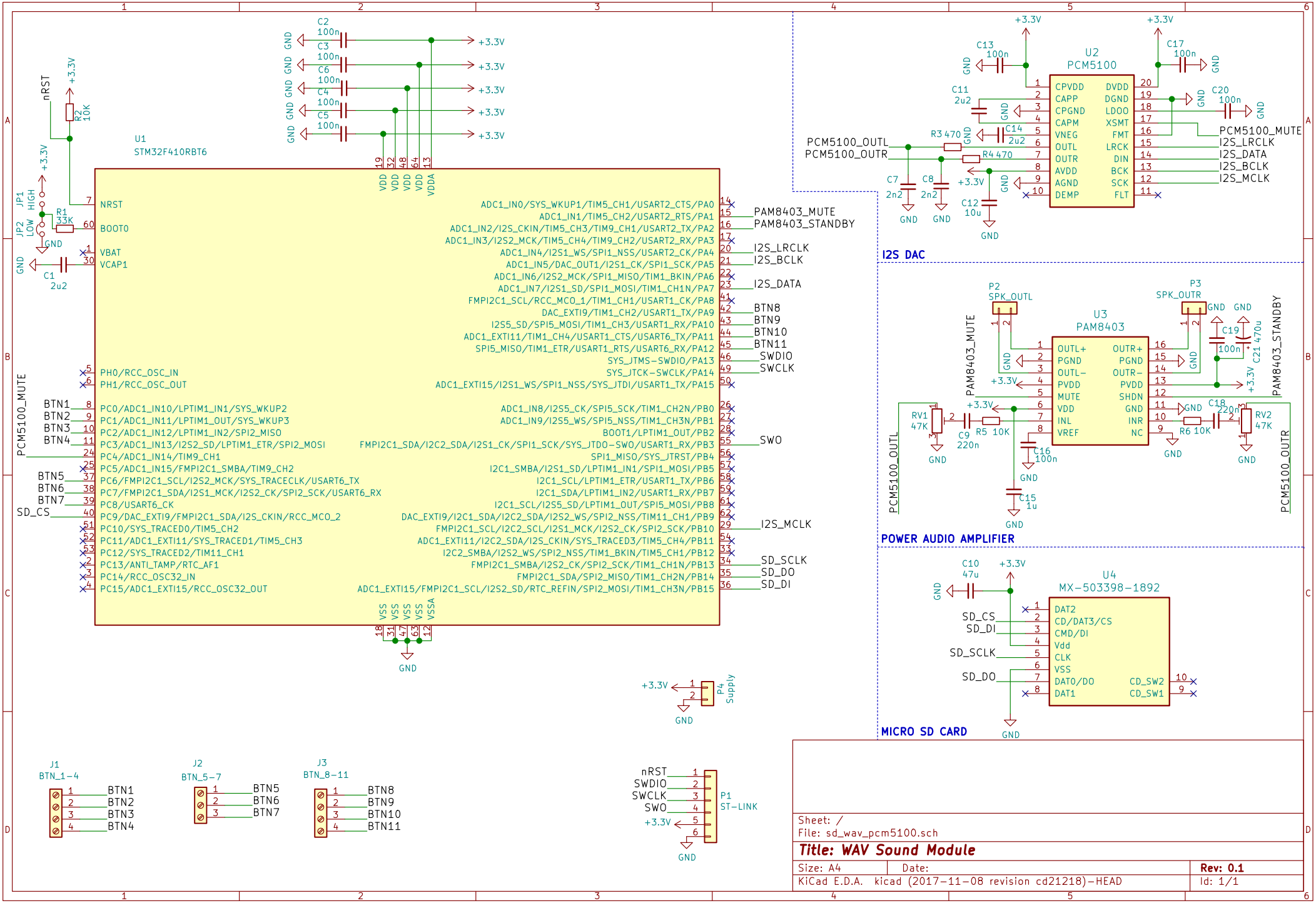

Sheet: /
File: sd_wav_pcm5100.sch

Title: WAV Sound Module

Size: A4	Date:	Rev: 0.1
KiCad E.D.A. kicad (2017-11-08 revision cd21218)-HEAD		Id: 1/1