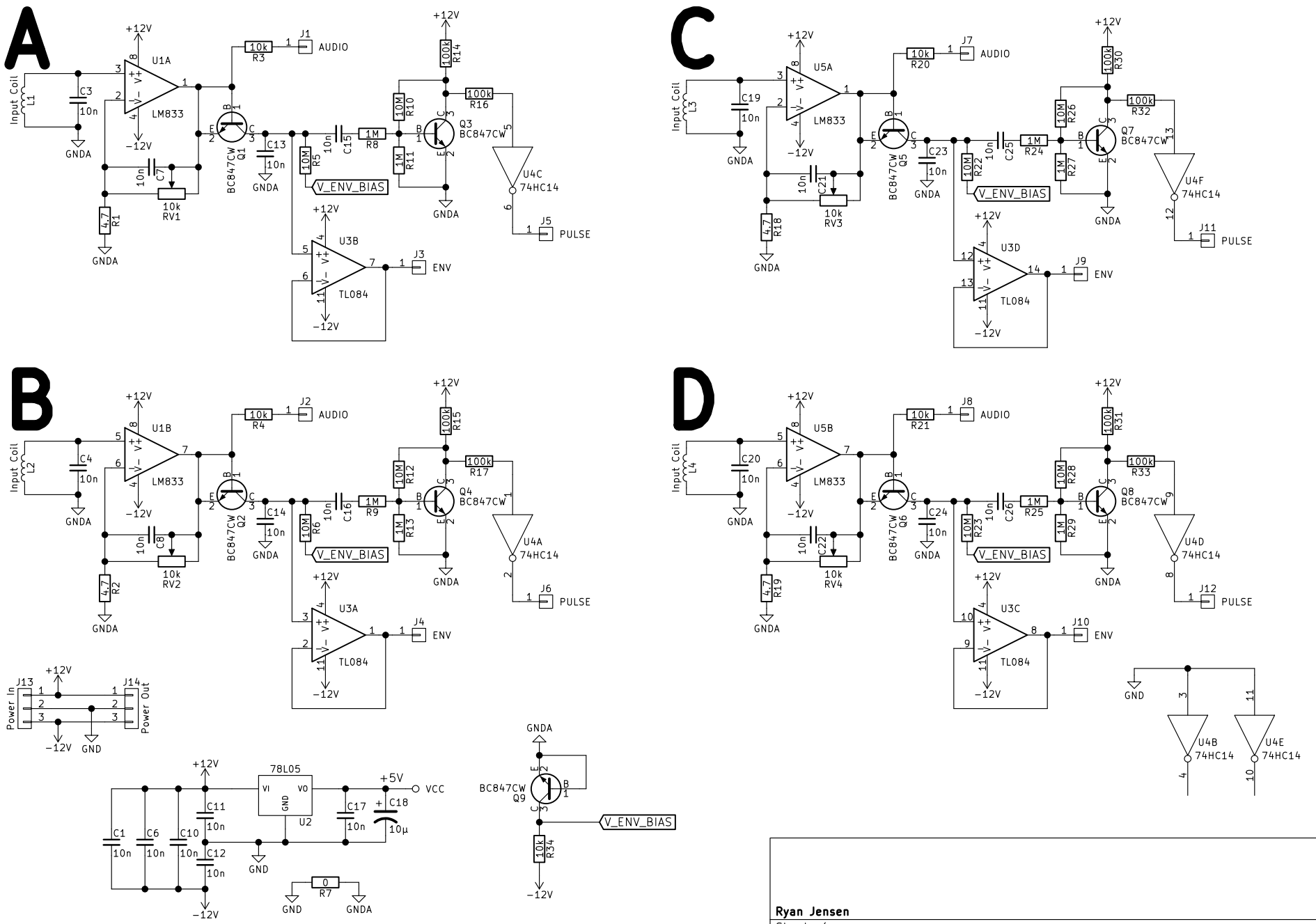
A
B
C
D
Input Coil
L1
L2
L3
L4
C3
C4
C19
C20
10n
GNDA
+12V
−12V
U1A
U1B
U5A
U5B
LM833
R1
R2
R18
R19
4.7
C7
C8
C21
C22
10k
RV1
RV2
RV3
RV4
BC847CW
Q1
Q2
Q5
Q6
C13
C14
C23
C24
10M
R5
R6
R22
R23
C15
C16
C25
C26
1M
R8
R9
R24
R25
R10
R11
R12
R13
R26
R27
R28
R29
100k
R14
R15
R30
R31
R16
R17
R32
R33
Q3
Q4
Q7
Q8
U4C
U4A
U4F
U4D
74HC14
U3B
U3A
U3D
U3C
TL084
V_ENV_BIAS
J1
J2
J7
J8
AUDIO
R3
R4
R20
R21
J5
J6
J11
J12
PULSE
J3
J4
J9
J10
ENV
J13
J14
Power In
Power Out
GND
78L05
VI
VO
U2
C1
C6
C10
C11
C12
C17
C18
10µ
+5V
VCC
R7
0
Q9
R34
Notes:
Input coils are same as used on Itron GrDF 169 MHz product.
Input coils are approx. 1.5 mH.
Ryan Jensen
Sheet: /
File: Input Board.sch
Title: Xylophone Automatic – Input Amplification
Size: USLetter
Date: 2017-07-13
Rev: 1.0
KiCad E.D.A. kicad 4.0.6
Id: 1/1