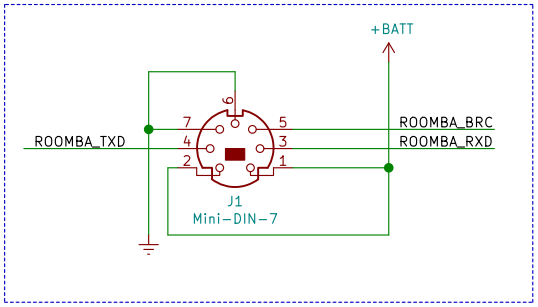

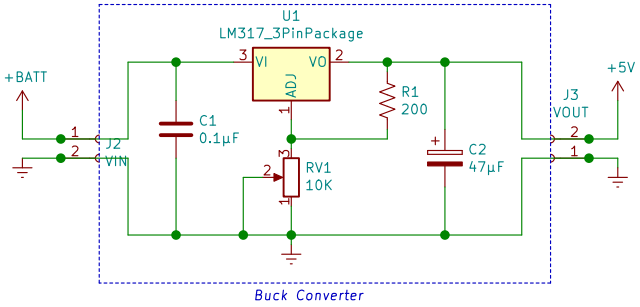

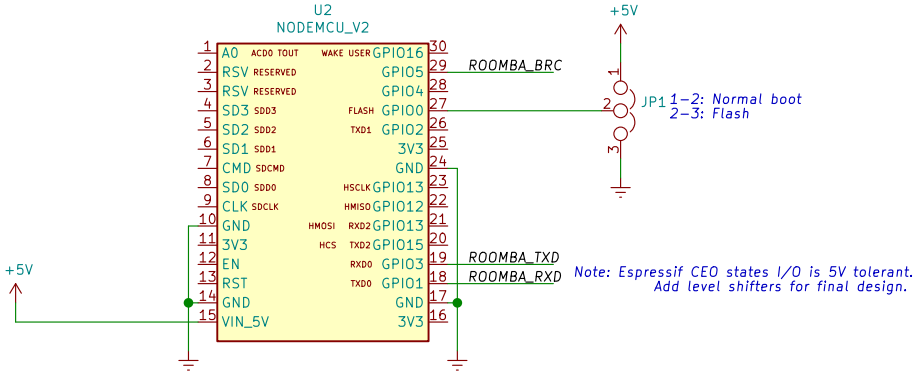

Drawn by: Matthew A Sparks

Sheet: /
File: roomba.sch

Title: Roomba 560 ESP-Wifi Prototype

Size: A4	Date: 2018/08/29	**Rev:** 1
KiCad E.D.A. kicad (5.0.0)		Id: 1/1