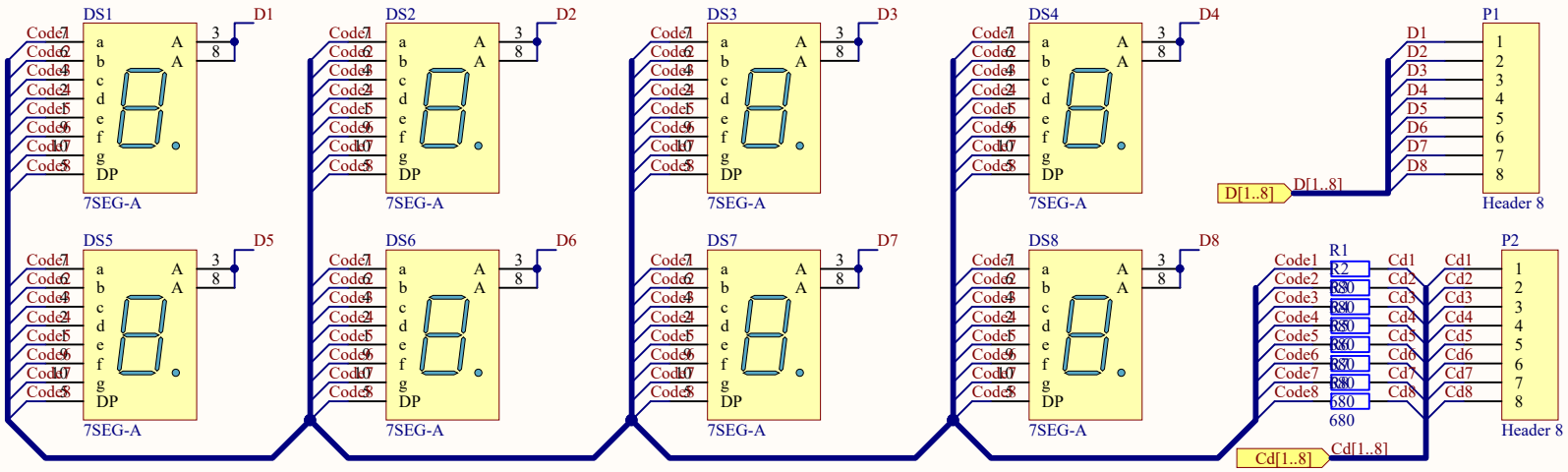

Title			Altium Limited L3, 12a Rodborough Rd Frenchs Forest NSW Australia 2086
Size: A4	Number:	Revision:	
Date: 03/05/2018	Time: 6:31:19 CH	Sheet of	
File: E:\HOC\Altium\Altium Project\Clock DS1307 ATMEGA8\Led7Seg.SchDoc			