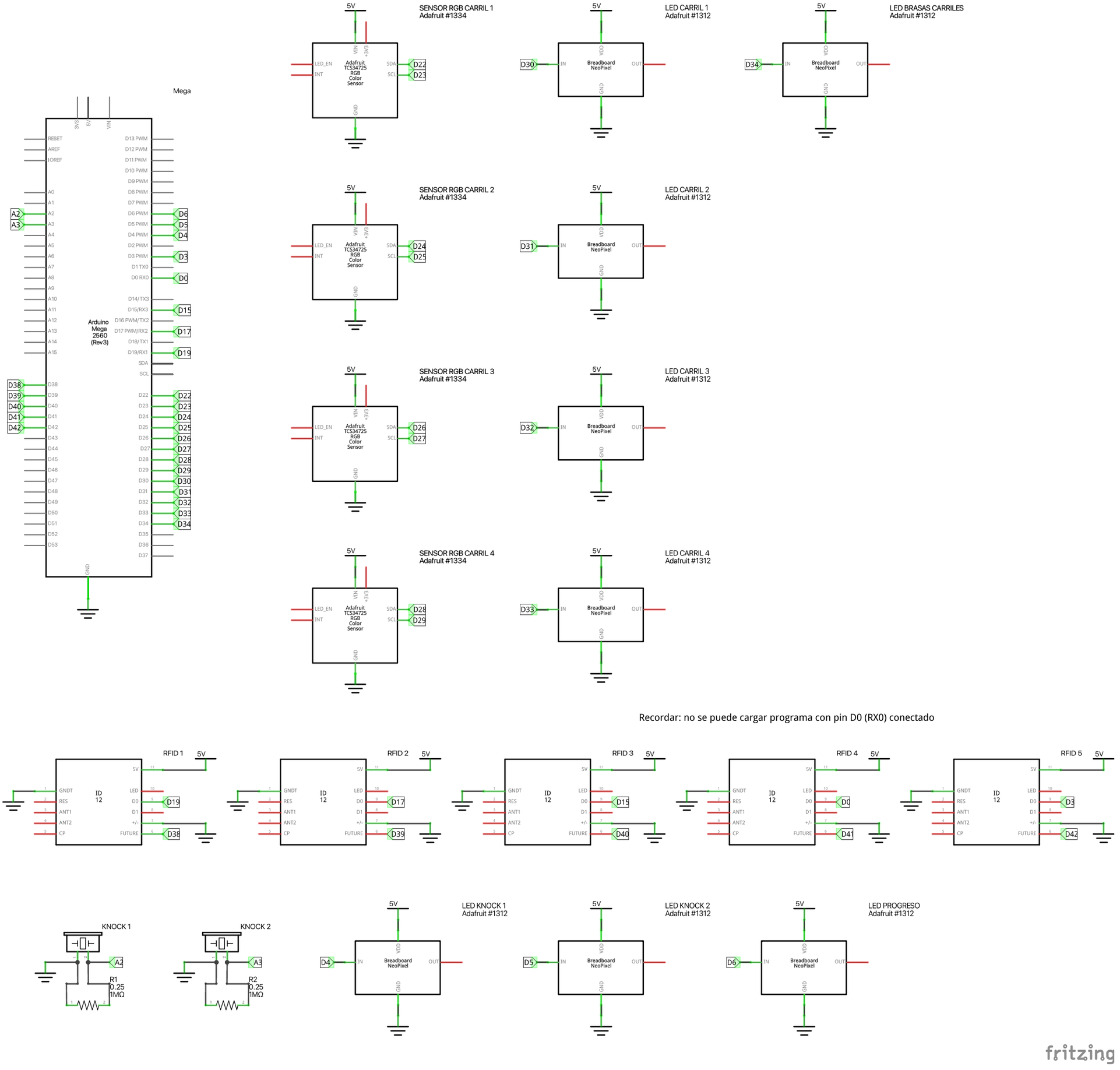
Mega
Arduino Mega 2560 (Rev3)
SENSOR RGB CARRIL 1
Adafruit #1334
SENSOR RGB CARRIL 2
Adafruit #1334
SENSOR RGB CARRIL 3
Adafruit #1334
SENSOR RGB CARRIL 4
Adafruit #1334
Adafruit TCS34725 RGB Color Sensor
LED CARRIL 1
Adafruit #1312
LED CARRIL 2
Adafruit #1312
LED CARRIL 3
Adafruit #1312
LED CARRIL 4
Adafruit #1312
LED BRASAS CARRILES
Adafruit #1312
Breadboard NeoPixel
Recordar: no se puede cargar programa con pin D0 (RX0) conectado
RFID 1
RFID 2
RFID 3
RFID 4
RFID 5
ID 12
KNOCK 1
KNOCK 2
R1 0.25 1MΩ
R2 0.25 1MΩ
LED KNOCK 1
Adafruit #1312
LED KNOCK 2
Adafruit #1312
LED PROGRESO
Adafruit #1312
fritzing