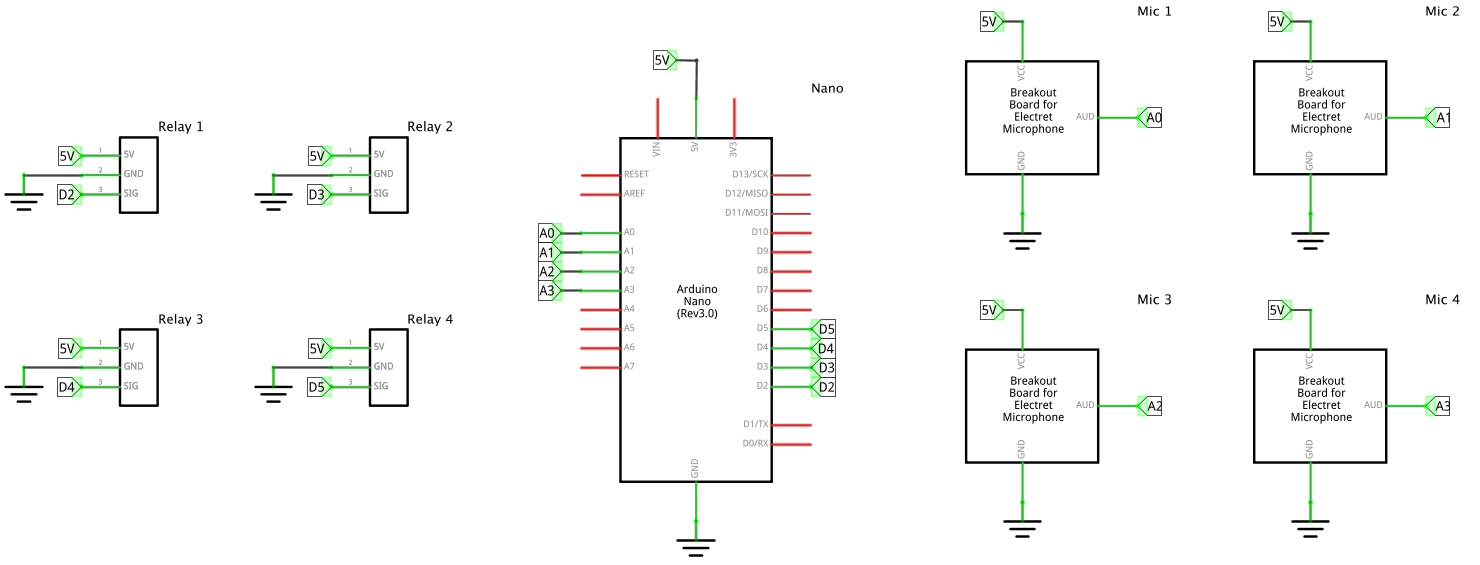
Relay 1
5V
D2
5V
GND
SIG
Relay 2
5V
D3
5V
GND
SIG
Relay 3
5V
D4
5V
GND
SIG
Relay 4
5V
D5
5V
GND
SIG
Nano
5V
VIN
5V
3V3
RESET
AREF
A0
A1
A2
A3
A4
A5
A6
A7
D13/SCK
D12/MISO
D11/MOSI
D10
D9
D8
D7
D6
D5
D4
D3
D2
D1/TX
D0/RX
GND
Arduino
Nano
(Rev3.0)
Mic 1
5V
VCC
Breakout
Board for
Electret
Microphone
AUD
GND
A0
Mic 2
5V
VCC
Breakout
Board for
Electret
Microphone
AUD
GND
A1
Mic 3
5V
VCC
Breakout
Board for
Electret
Microphone
AUD
GND
A2
Mic 4
5V
VCC
Breakout
Board for
Electret
Microphone
AUD
GND
A3
fritzing