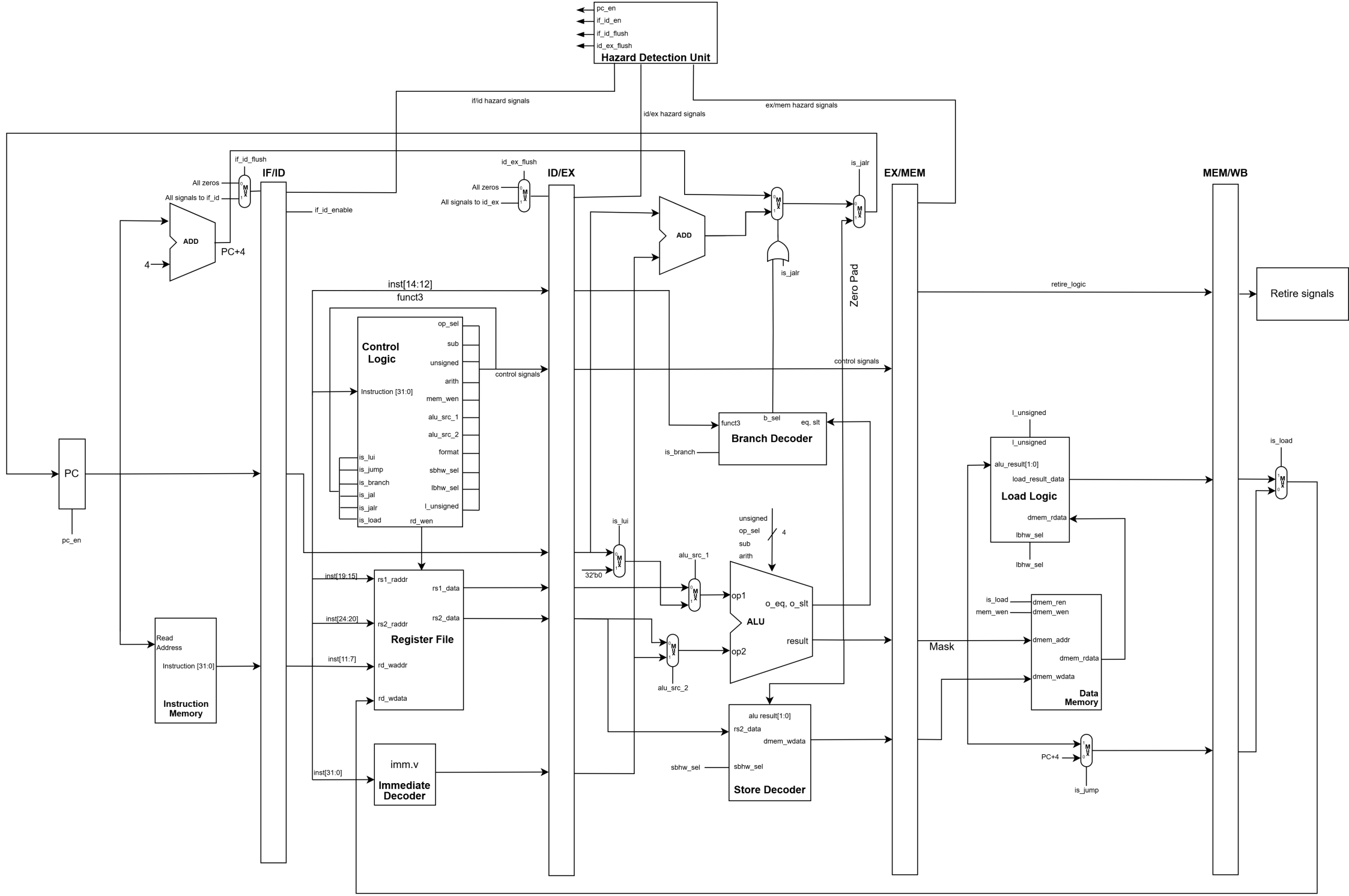
Hazard Detection Unit
pc_en
if_id_en
if_id_flush
id_ex_flush
if/id hazard signals
id/ex hazard signals
ex/mem hazard signals
IF/ID
ID/EX
EX/MEM
MEM/WB
if_id_flush
All zeros
All signals to if_id
ADD
4
PC+4
if_id_enable
id_ex_flush
All zeros
All signals to id_ex
ADD
is_jalr
is_jalr
Zero Pad
retire_logic
Retire signals
inst[14:12]
funct3
Control Logic
Instruction [31:0]
op_sel
sub
unsigned
arith
mem_wen
alu_src_1
alu_src_2
format
sbhw_sel
lbhw_sel
l_unsigned
rd_wen
is_lui
is_jump
is_branch
is_jal
is_jalr
is_load
control signals
control signals
PC
pc_en
funct3
b_sel
eq, slt
Branch Decoder
is_branch
l_unsigned
l_unsigned
alu_result[1:0]
load_result_data
Load Logic
dmem_rdata
lbhw_sel
lbhw_sel
is_load
is_lui
32'b0
unsigned
op_sel
sub
arith
4
alu_src_1
op1
o_eq, o_slt
ALU
result
op2
alu_src_2
inst[19:15]
rs1_raddr
rs1_data
inst[24:20]
rs2_raddr
rs2_data
Register File
inst[11:7]
rd_waddr
rd_wdata
Read Address
Instruction [31:0]
Instruction Memory
inst[31:0]
imm.v
Immediate Decoder
alu result[1:0]
rs2_data
dmem_wdata
sbhw_sel
sbhw_sel
Store Decoder
is_load
mem_wen
dmem_ren
dmem_wen
dmem_addr
dmem_rdata
dmem_wdata
Data Memory
Mask
PC+4
is_jump
is_load