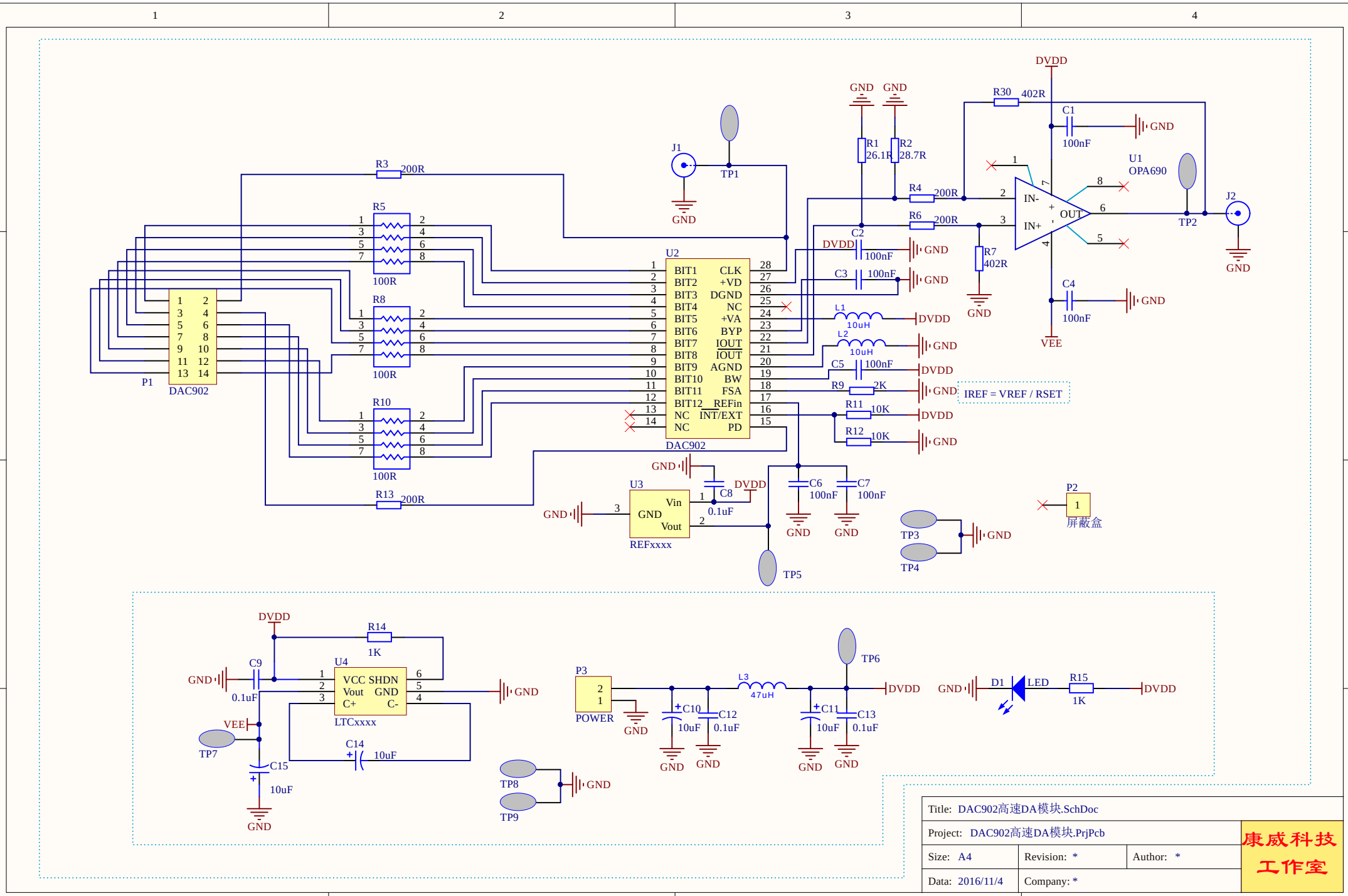

Title: DAC902高速DA模块.SchDoc		康威科技工作室
Project: DAC902高速DA模块.PrjPcb		
Size: A4	Revision: *	Author: *
Data: 2016/11/4	Company: *	

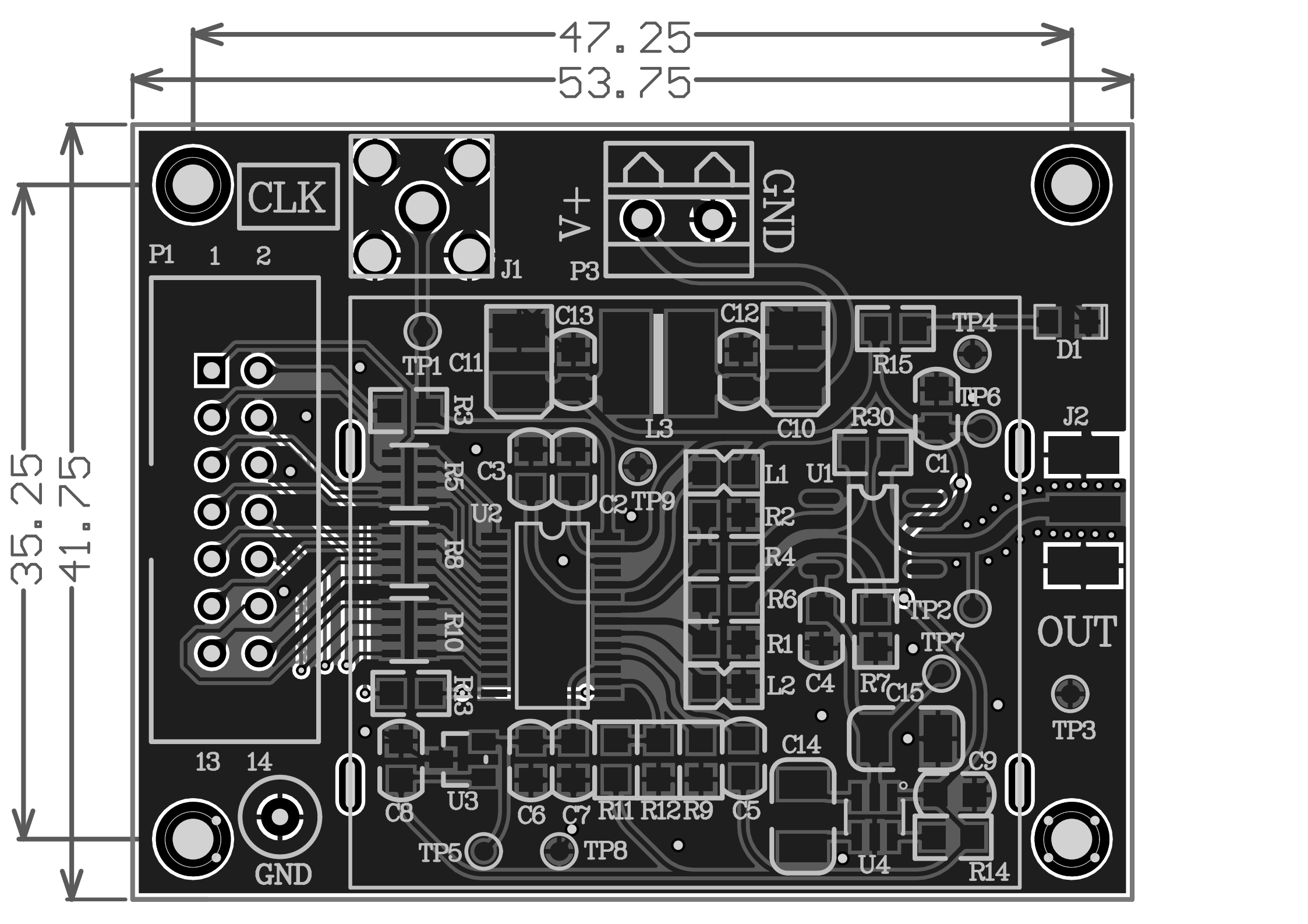
47.25
53.75
35.25
41.75
CLK
P1
1
2
J1
V+
GND
P3
TP1
C11
C13
C12
TP4
D1
R15
TP6
R3
L3
C10
R30
J2
C3
R5
U2
C2
TP9
L1
U1
C1
R2
R4
R8
R6
TP2
OUT
R10
R1
TP7
L2
C4
R7
C15
R13
TP3
13
14
C14
C9
C8
U3
C6
C7
R11
R12
R9
C5
TP5
TP8
U4
R14
GND