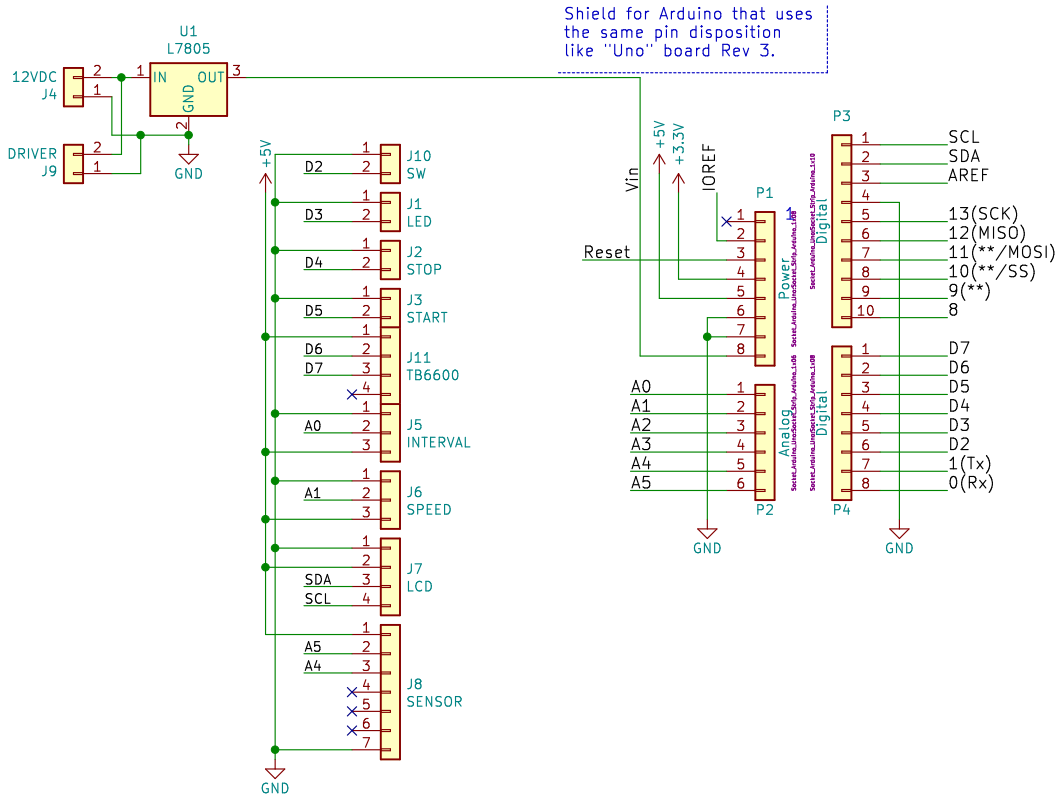

Sheet: /
File: oxi_sensor.sch

Title:

Size: A4	Date: lun. 30 mars 2015	**Rev:**
KiCad E.D.A. kicad (5.1.9)-1		Id: 1/1