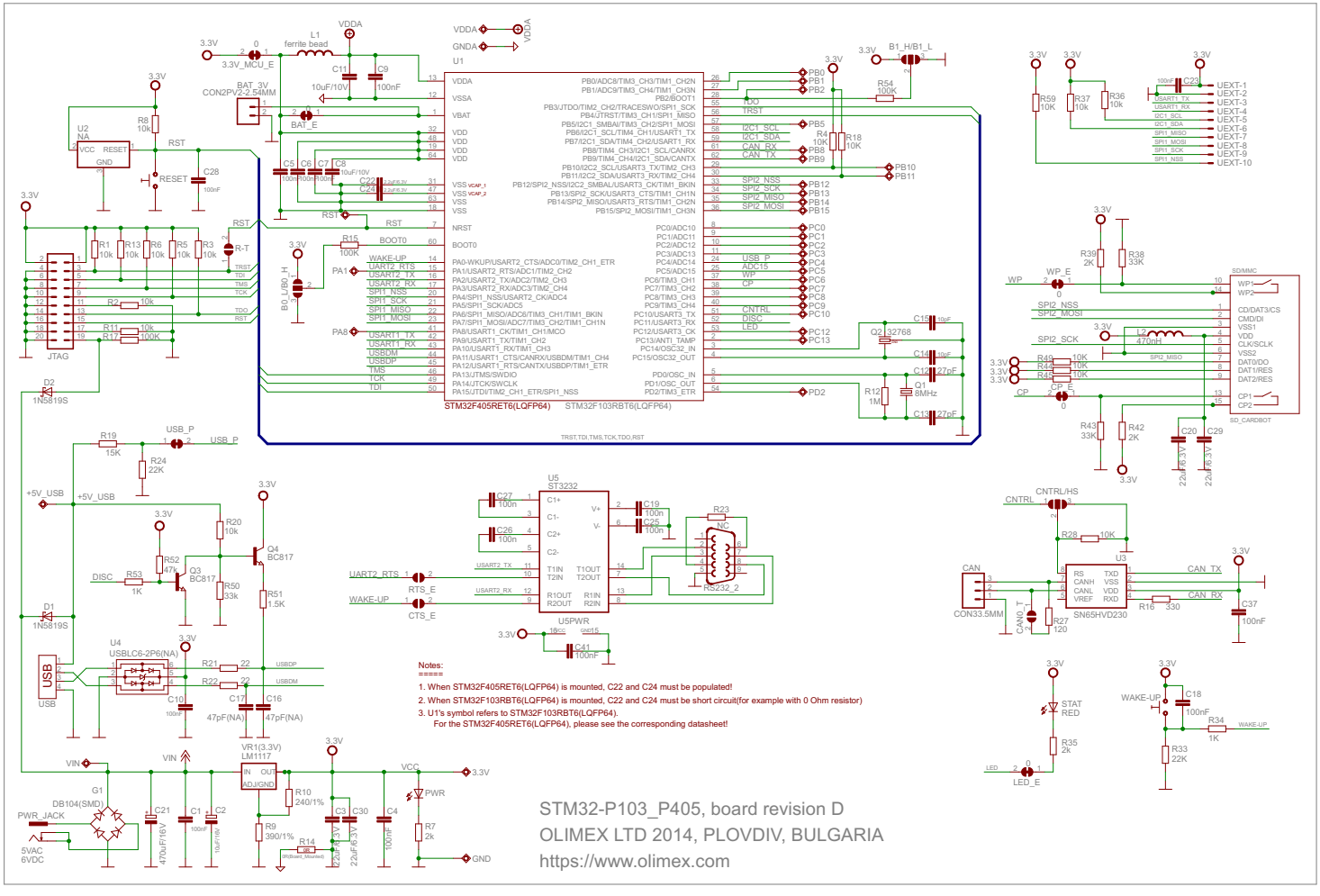
U1
STM32F405RET6(LQFP64)
STM32F103RBT6(LQFP64)
U2
NA
VCC
RESET
GND
RESET
U5
ST3232
U3
SN65HVD230
U4
USBLC6-2P6(NA)
VR1(3.3V)
LM1117
G1
DB104(SMD)
PWR_JACK
5VAC
6VDC
JTAG
USB
CON33.5MM
CAN
RS232_2
BAT_3V
CON2PV2-2.54MM
SD/MMC
SD_CARDBOT
UEXT-1
UEXT-2
UEXT-3
UEXT-4
UEXT-5
UEXT-6
UEXT-7
UEXT-8
UEXT-9
UEXT-10
STAT
RED
LED
LED_E
WAKE-UP
PWR
VDDA
GNDA
3.3V
+5V_USB
USB_P
CAN_TX
CAN_RX
CNTRL/HS
TRST,TDI,TMS,TCK,TDO,RST
Notes:
1. When STM32F405RET6(LQFP64) is mounted, C22 and C24 must be populated!
2. When STM32F103RBT6(LQFP64) is mounted, C22 and C24 must be short circuit(for example with 0 Ohm resistor)
3. U1's symbol refers to STM32F103RBT6(LQFP64).
For the STM32F405RET6(LQFP64), please see the corresponding datasheet!
STM32-P103_P405, board revision D
OLIMEX LTD 2014, PLOVDIV, BULGARIA
https://www.olimex.com