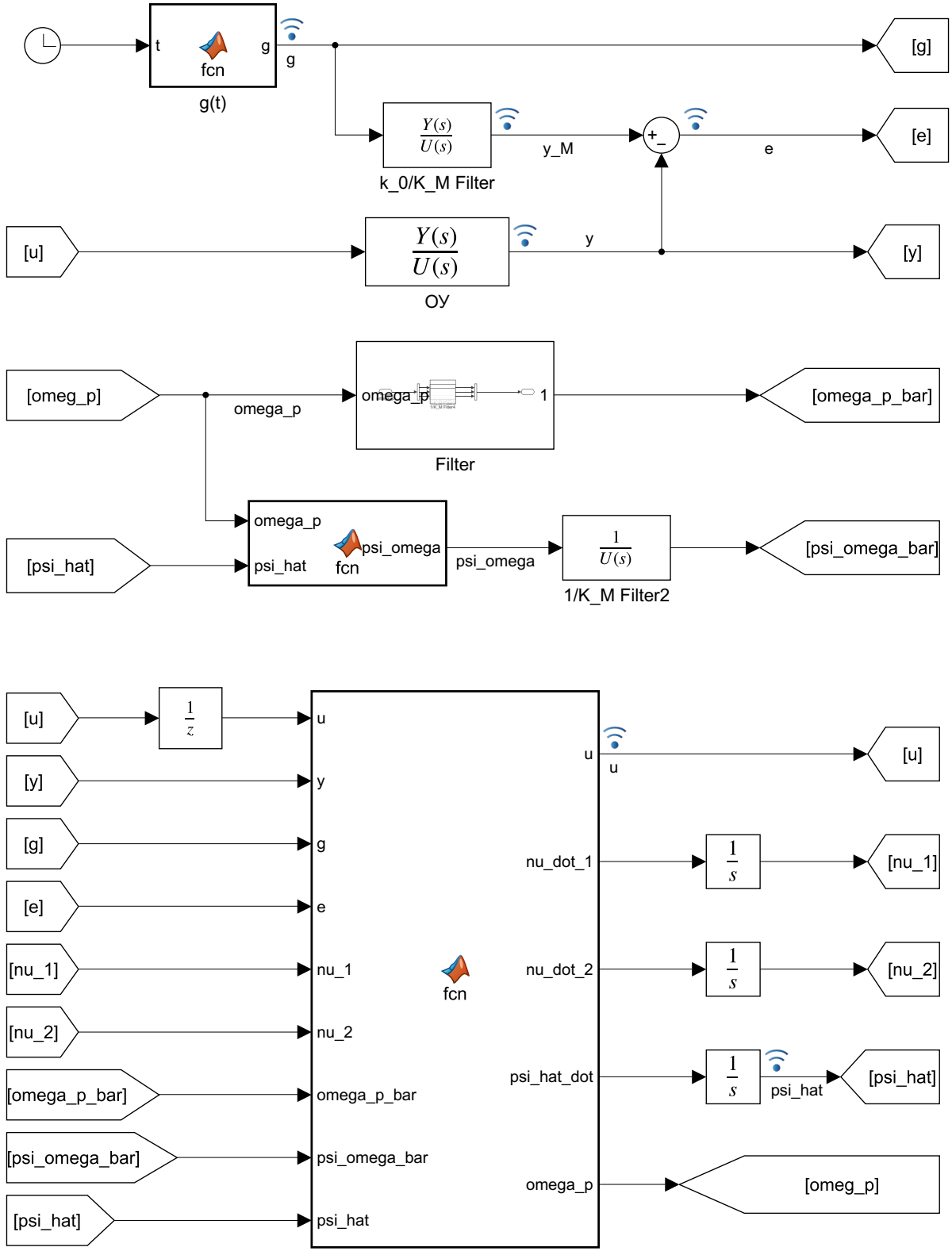
t
fcn
g
g
g(t)
[g]
Y(s)/U(s)
k_0/K_M Filter
y_M
e
[e]
[u]
Y(s)/U(s)
ОУ
y
[y]
[omeg_p]
omega_p
omega_p
1
Filter
[omega_p_bar]
[psi_hat]
omega_p
psi_hat
fcn
psi_omega
psi_omega
1/U(s)
1/K_M Filter2
[psi_omega_bar]
[u]
1/z
[y]
[g]
[e]
[nu_1]
[nu_2]
[omega_p_bar]
[psi_omega_bar]
[psi_hat]
u
y
g
e
nu_1
nu_2
omega_p_bar
psi_omega_bar
psi_hat
fcn
u
u
[u]
nu_dot_1
1/s
[nu_1]
nu_dot_2
1/s
[nu_2]
psi_hat_dot
1/s
psi_hat
[psi_hat]
omega_p
[omeg_p]