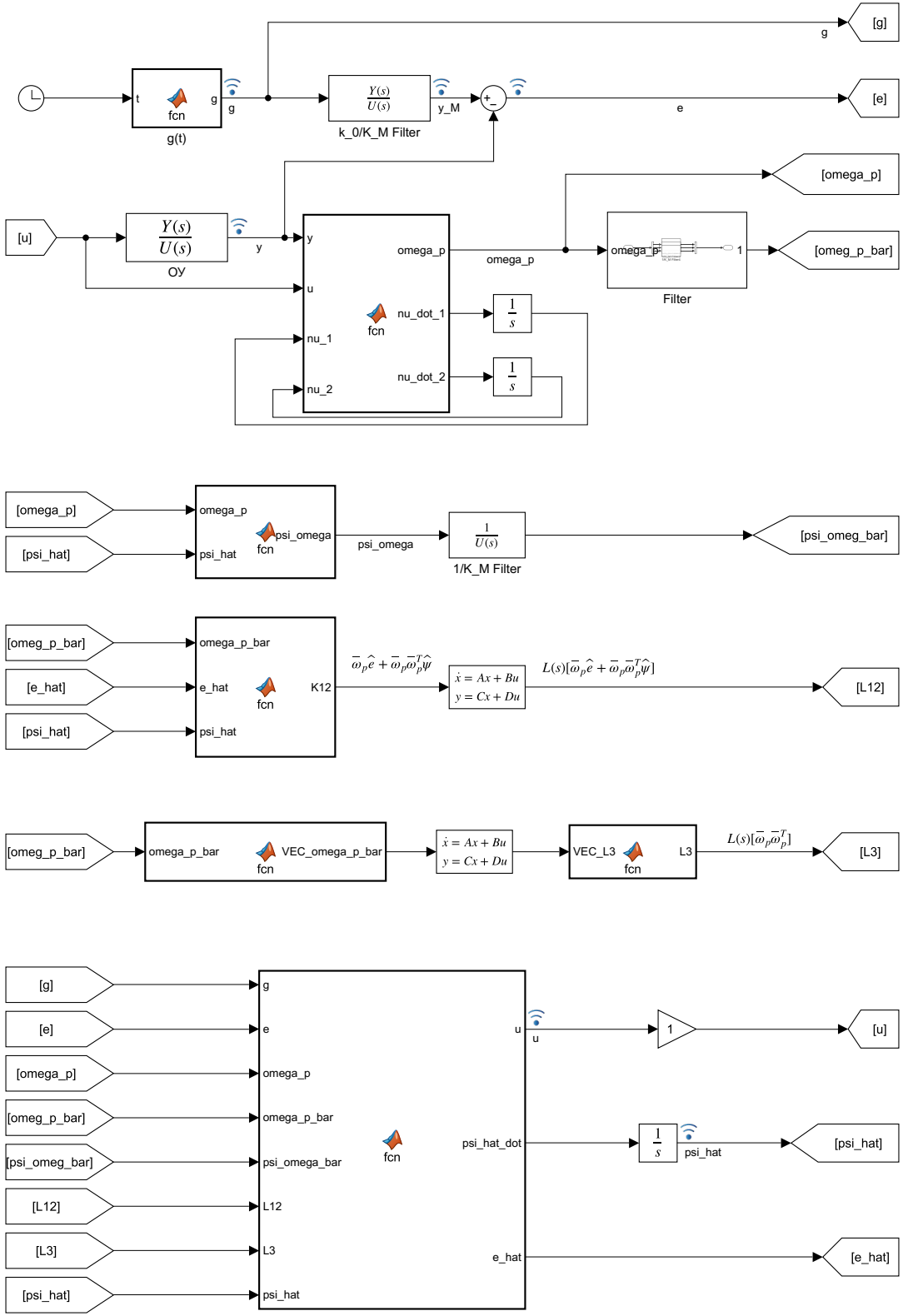
[g]
g
t
fcn
g
g(t)
$\frac{Y(s)}{U(s)}$
y_M
k_0/K_M Filter
e
[e]
[omega_p]
[u]
$\frac{Y(s)}{U(s)}$
OУ
y
y
u
nu_1
nu_2
omega_p
nu_dot_1
nu_dot_2
fcn
$\frac{1}{s}$
$\frac{1}{s}$
omega_p
omega_p
1
Filter
[omeg_p_bar]
[omega_p]
[psi_hat]
omega_p
psi_hat
psi_omega
fcn
psi_omega
$\frac{1}{U(s)}$
1/K_M Filter
[psi_omeg_bar]
[omeg_p_bar]
[e_hat]
[psi_hat]
omega_p_bar
e_hat
psi_hat
K12
fcn
$\bar{\omega}_p\hat{e} + \bar{\omega}_p\bar{\omega}_p^T\hat{\psi}$
$\dot{x} = Ax + Bu$
$y = Cx + Du$
$L(s)[\bar{\omega}_p\hat{e} + \bar{\omega}_p\bar{\omega}_p^T\hat{\psi}]$
[L12]
[omeg_p_bar]
omega_p_bar
VEC_omega_p_bar
fcn
$\dot{x} = Ax + Bu$
$y = Cx + Du$
VEC_L3
L3
fcn
$L(s)[\bar{\omega}_p\bar{\omega}_p^T]$
[L3]
[g]
[e]
[omega_p]
[omeg_p_bar]
[psi_omeg_bar]
[L12]
[L3]
[psi_hat]
g
e
omega_p
omega_p_bar
psi_omega_bar
L12
L3
psi_hat
fcn
u
u
psi_hat_dot
e_hat
1
[u]
$\frac{1}{s}$
psi_hat
[psi_hat]
[e_hat]