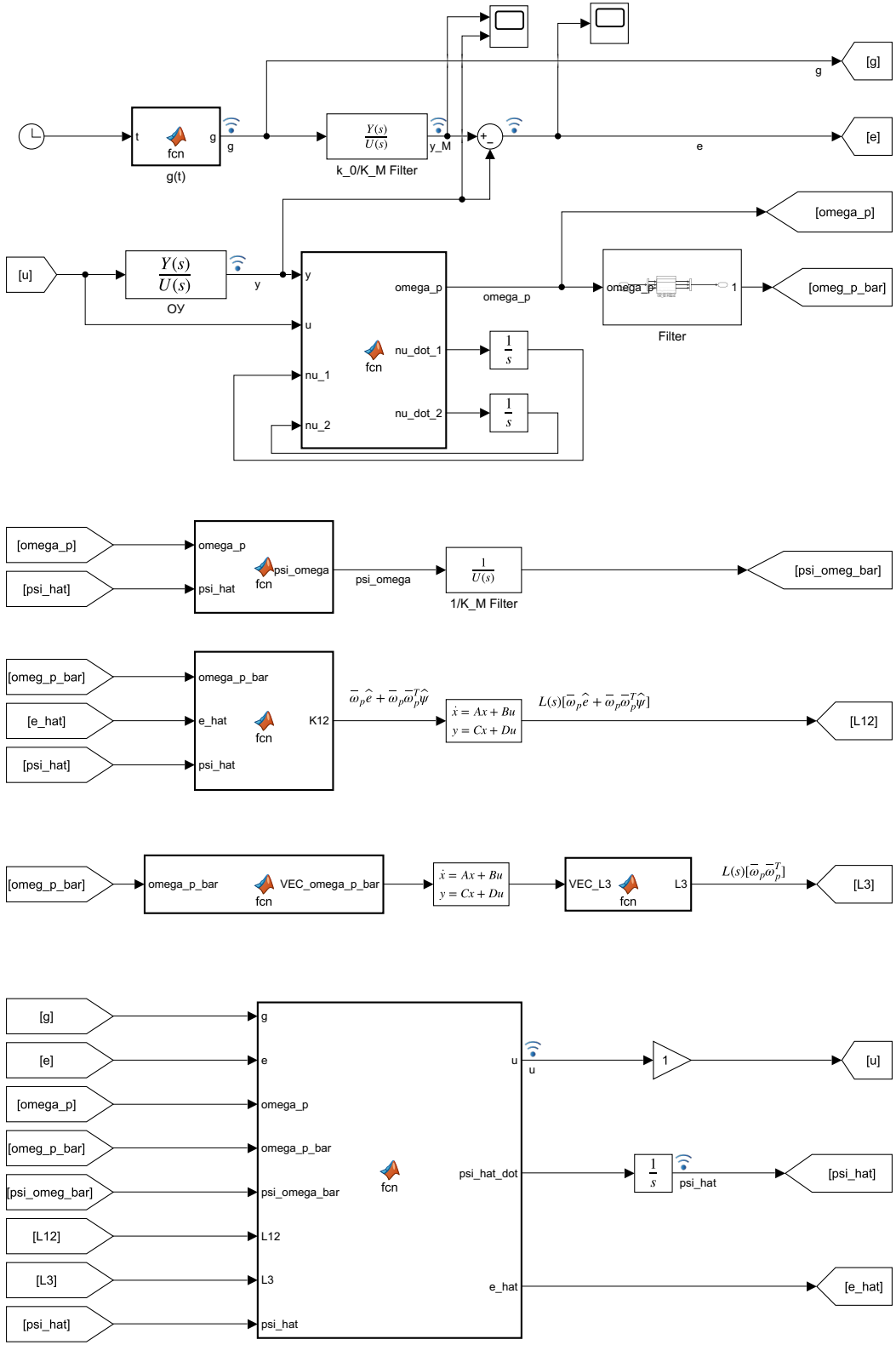
g(t)
k_0/K_M Filter
OY
Filter
1/K_M Filter
[g]
[e]
[omega_p]
[omeg_p_bar]
[u]
[psi_omeg_bar]
[psi_hat]
[e_hat]
[L12]
[L3]
omega_p
omega_p_bar
psi_omega
psi_hat
e_hat
K12
VEC_omega_p_bar
VEC_L3
psi_omega_bar
psi_hat_dot
$\dot{x} = Ax + Bu$
$y = Cx + Du$
$\overline{\omega}_p\hat{e} + \overline{\omega}_p\overline{\omega}_p^T\hat{\psi}$
$L(s)[\overline{\omega}_p\hat{e} + \overline{\omega}_p\overline{\omega}_p^T\hat{\psi}]$
$L(s)[\overline{\omega}_p\overline{\omega}_p^T]$