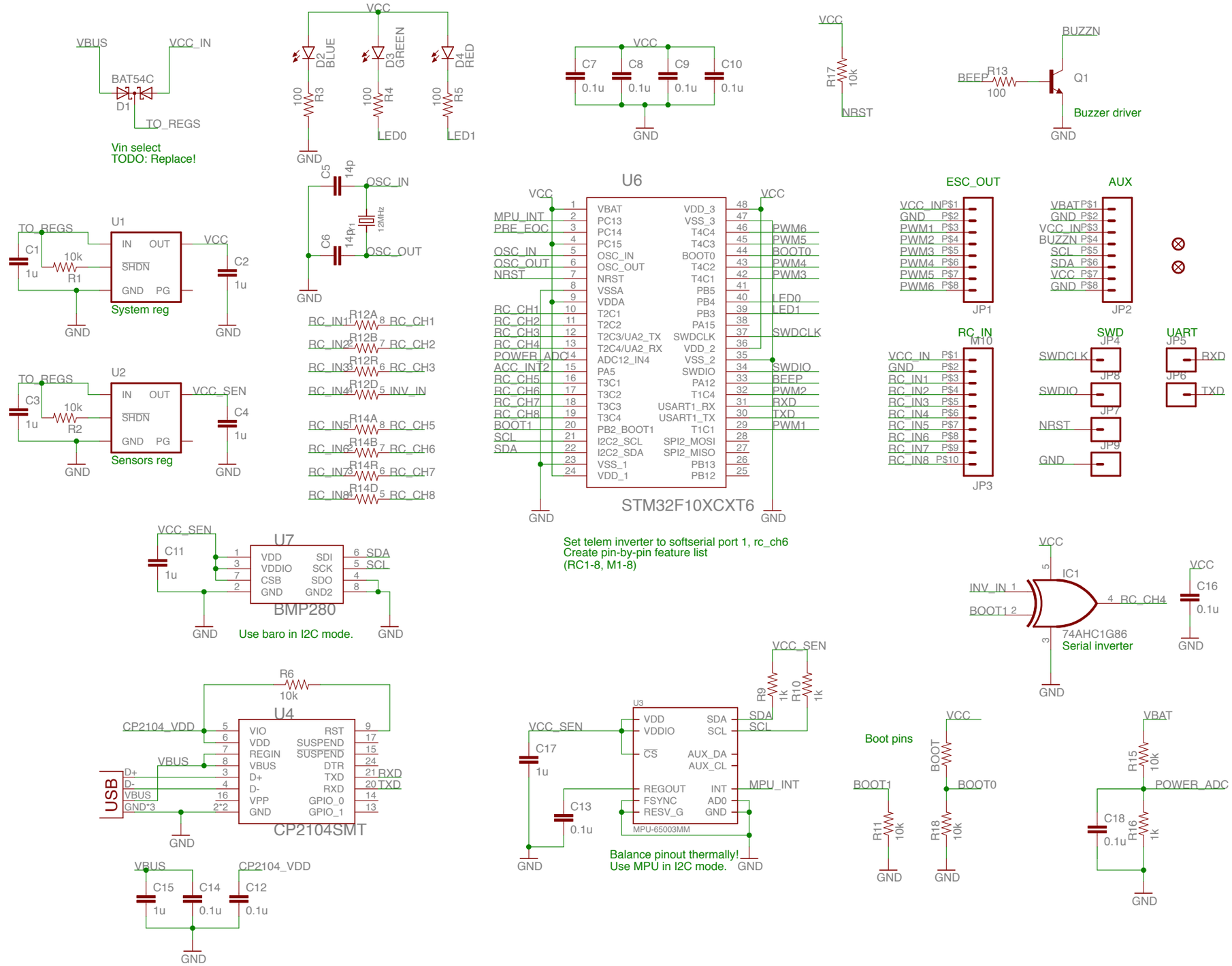
VBUS
VCC_IN
BAT54C
D1
TO_REGS
Vin select
TODO: Replace!
VCC
D2 BLUE
D3 GREEN
D4 RED
100 R3
100 R4
100 R5
LED0
LED1
GND
C7 0.1u
C8 0.1u
C9 0.1u
C10 0.1u
R17 10k
NRST
BUZZN
BEEP
R13 100
Q1
Buzzer driver
C5 14p
C6 14p
OSC_IN
OSC_OUT
12MHz
U1
IN OUT
SHDN
GND PG
System reg
C1 1u
10k R1
C2 1u
U2
Sensors reg
C3 1u
10k R2
C4 1u
VCC_SEN
RC_IN1 R12A 8 RC_CH1
RC_IN2 R12B 7 RC_CH2
RC_IN3 R12R 6 RC_CH3
RC_IN4 R12D 5 INV_IN
RC_IN5 R14A 8 RC_CH5
RC_IN6 R14B 7 RC_CH6
RC_IN7 R14R 6 RC_CH7
RC_IN8 R14D 5 RC_CH8
U6
VBAT
PC13
PC14
PC15
OSC_IN
OSC_OUT
NRST
VSSA
VDDA
T2C1
T2C2
T2C3/UA2_TX
T2C4/UA2_RX
ADC12_IN4
PA5
T3C1
T3C2
T3C3
T3C4
PB2_BOOT1
I2C2_SCL
I2C2_SDA
VSS_1
VDD_1
VDD_3
VSS_3
T4C4
T4C3
BOOT0
T4C2
T4C1
PB5
PB4
PB3
PA15
SWDCLK
VDD_2
VSS_2
SWDIO
PA12
T1C4
USART1_RX
USART1_TX
T1C1
SPI2_MOSI
SPI2_MISO
PB13
PB12
MPU_INT
PRE_EOC
POWER_ADC
ACC_INT2
RC_CH5
RC_CH6
RC_CH7
RC_CH8
BOOT1
SCL
SDA
PWM6
PWM5
PWM4
PWM3
LED0
LED1
SWDCLK
SWDIO
BEEP
PWM2
RXD
TXD
PWM1
STM32F10XCXT6
Set telem inverter to softserial port 1, rc_ch6
Create pin-by-pin feature list
(RC1-8, M1-8)
ESC_OUT
VCC_IN P$1
GND P$2
PWM1 P$3
PWM2 P$4
PWM3 P$5
PWM4 P$6
PWM5 P$7
PWM6 P$8
JP1
AUX
VBAT P$1
GND P$2
VCC_IN P$3
BUZZN P$4
SCL P$5
SDA P$6
VCC P$7
GND P$8
JP2
RC_IN
M10
VCC_IN P$1
GND P$2
RC_IN1 P$3
RC_IN2 P$4
RC_IN3 P$5
RC_IN4 P$6
RC_IN5 P$7
RC_IN6 P$8
RC_IN7 P$9
RC_IN8 P$10
JP3
SWD
JP4 SWDCLK
JP8 SWDIO
JP7 NRST
JP9 GND
UART
JP5 RXD
JP6 TXD
U7
VDD SDI
VDDIO SCK
CSB SDO
GND GND2
6 SDA
5 SCL
BMP280
Use baro in I2C mode.
IC1
INV_IN 1
BOOT1 2
4 RC_CH4
74AHC1G86
Serial inverter
C16 0.1u
R6 10k
U4
CP2104_VDD
VIO RST
VDD SUSPEND
REGIN SUSPEND
VBUS DTR
D+ TXD
D- RXD
VPP GPIO_0
GND GPIO_1
21 RXD
20 TXD
USB
D+
D-
VBUS
GND*3
CP2104SMT
C15 1u
C14 0.1u
C12 0.1u
U3
VDD SDA
VDDIO SCL
CS
AUX_DA
AUX_CL
REGOUT INT
FSYNC AD0
RESV_G GND
MPU-65003MM
MPU_INT
C17 1u
C13 0.1u
R9 1k
R10 1k
Balance pinout thermally!
Use MPU in I2C mode.
Boot pins
BOOT
BOOT1
BOOT0
R11 10k
R18 10k
VBAT
R15 10k
POWER_ADC
C18 0.1u
R16 1k