REVISIONS				
ZONE	REV	DESCRIPTION	DATE	APPROVED

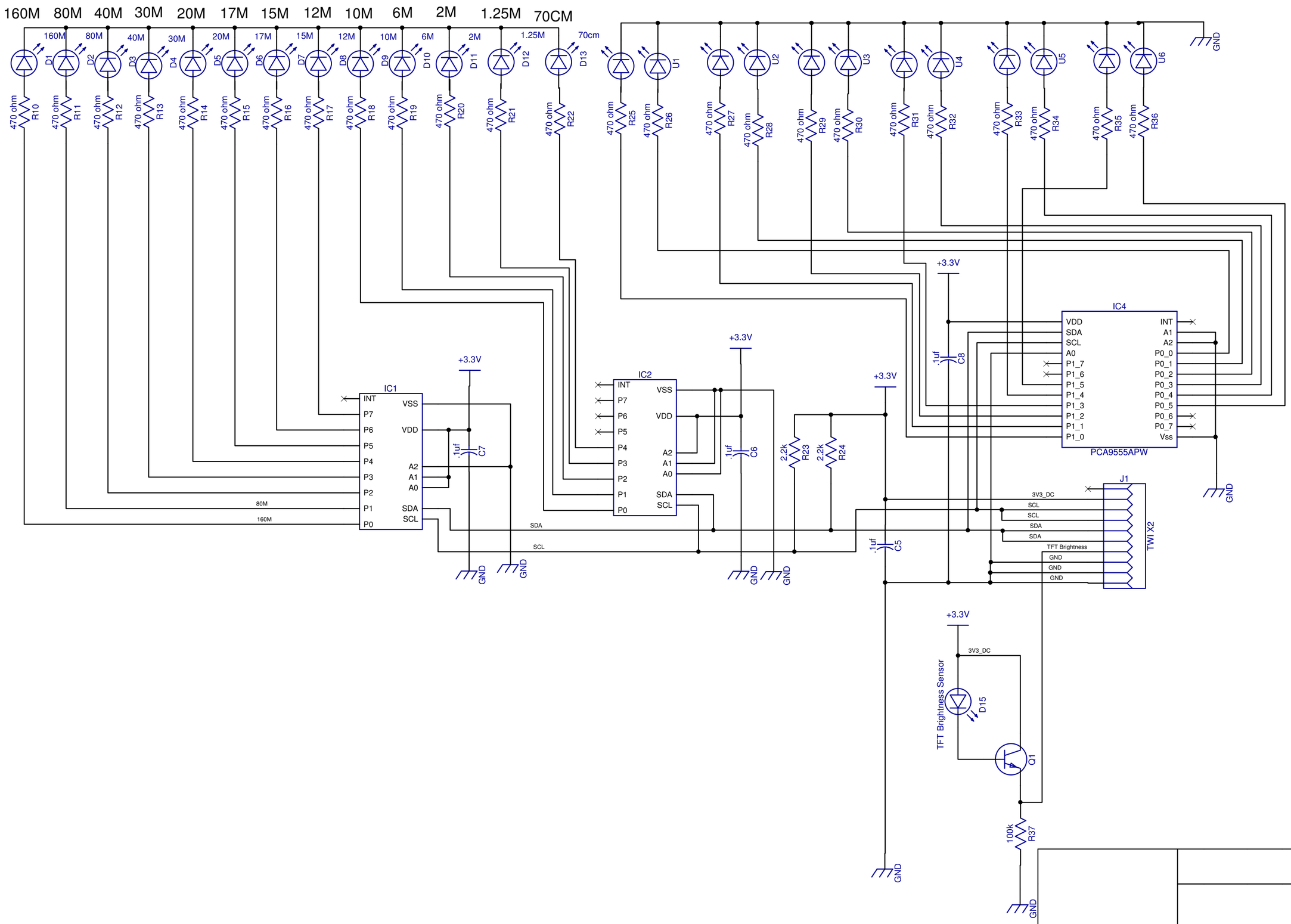

SIZE	FSCM NO.	DWG NO.	REV
SCALE		Band_Alarm_LED	