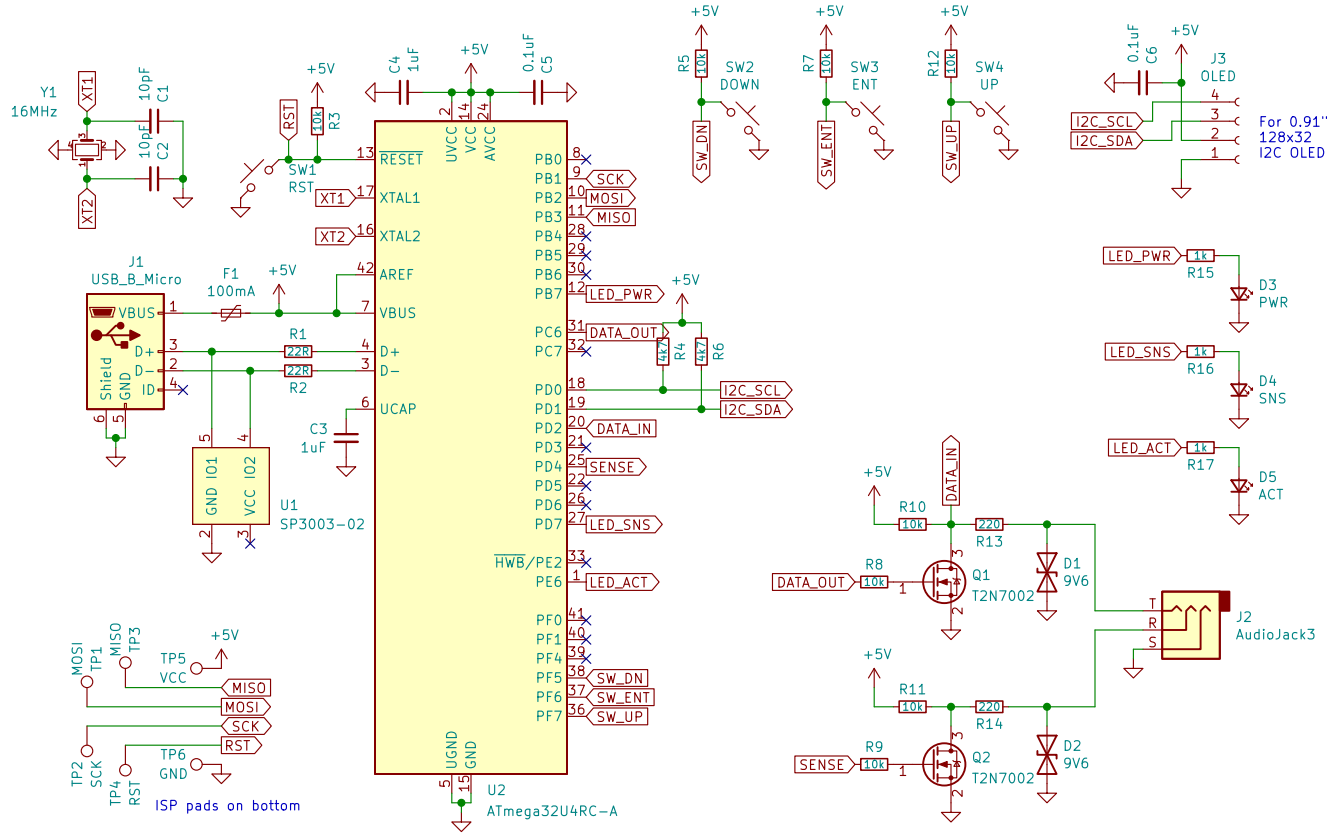

2022−01−19: Fixed missing data input line

Based on the KFDShield
https://github.com/jelimoore/KFDtool
W3AXL

Sheet: /
File: microkfd.kicad_sch

Title: MicroKFD

Size: A	Date: 2022−01−19	**Rev: C**
KiCad E.D.A. kicad (6.0.0)		Id: 1/1