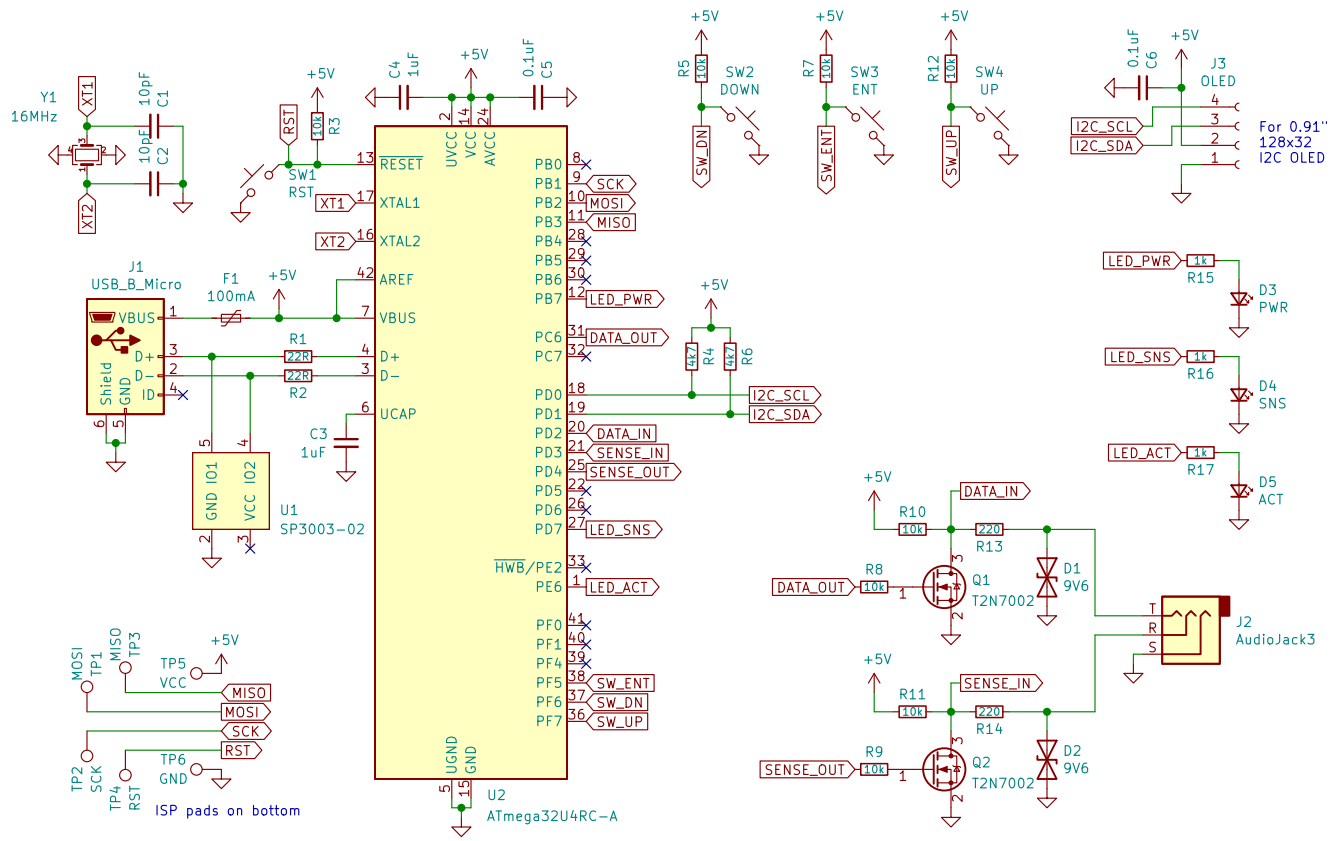

2022-04-09 NOTE: Pins 2 & 3 used for OLED I2C on 32u4
2022-04-09 Renumbered pins to be closer to KFDShield
Based on the KFDShield
https://github.com/jelimoore/KFDtool
W3AXL

Sheet: /
File: microkfd.kicad_sch

Title: MicroKFD

Size: A	Date: 2022-04-09	**Rev: D**
KiCad E.D.A. kicad (6.0.1)		Id: 1/1