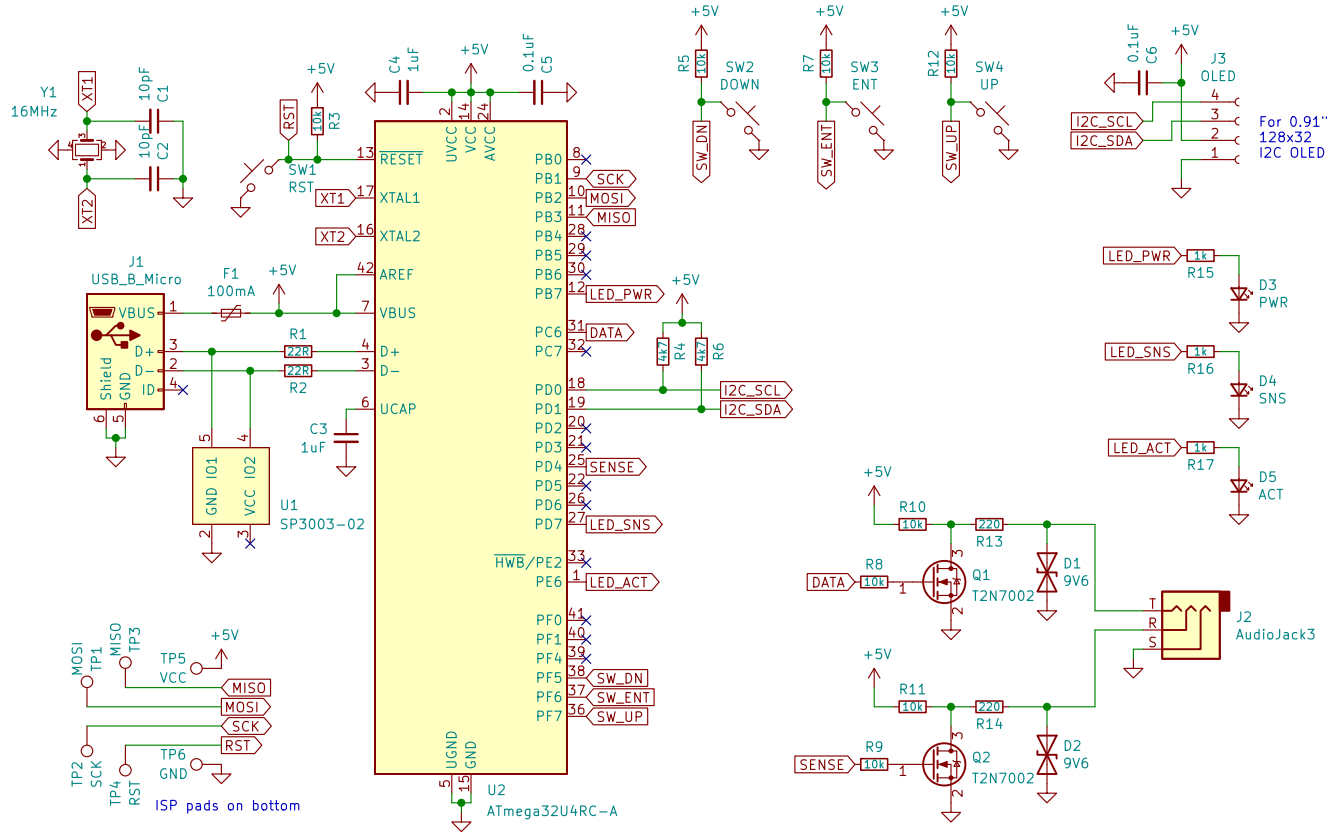


Based on the KFDShield
https://github.com/jelimoore/KFDtool

**W3AXL**

Sheet: /
File: microkfd.kicad_sch

**Title: MicroKFD**

| | | |
|---|---|---|
| Size: A | Date: 2021−12−06 | **Rev: A** |
| KiCad E.D.A. kicad (6.0.0) | | Id: 1/1 |