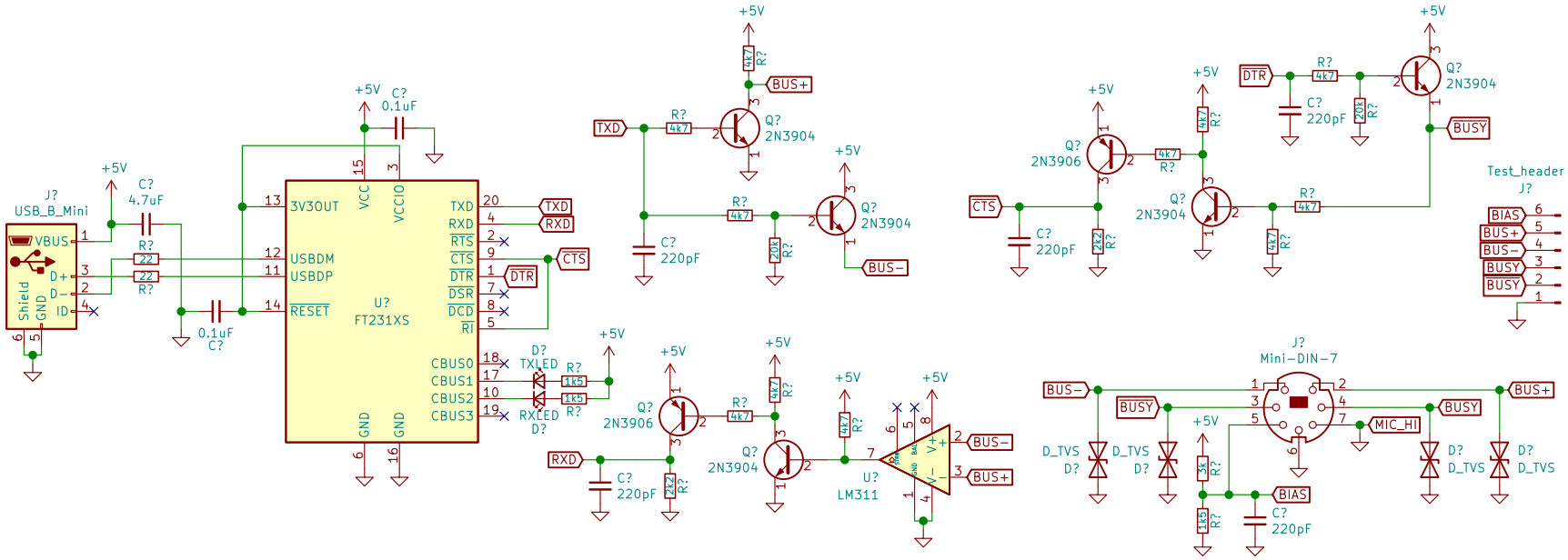

W3AXL

Sheet: /

File: minirib−usb.sch

Title: MiniRIB−USB

Size: USLetter	Date: 2021−08−06	Rev: A
KiCad E.D.A. kicad (5.1.9)−1		Id: 1/1