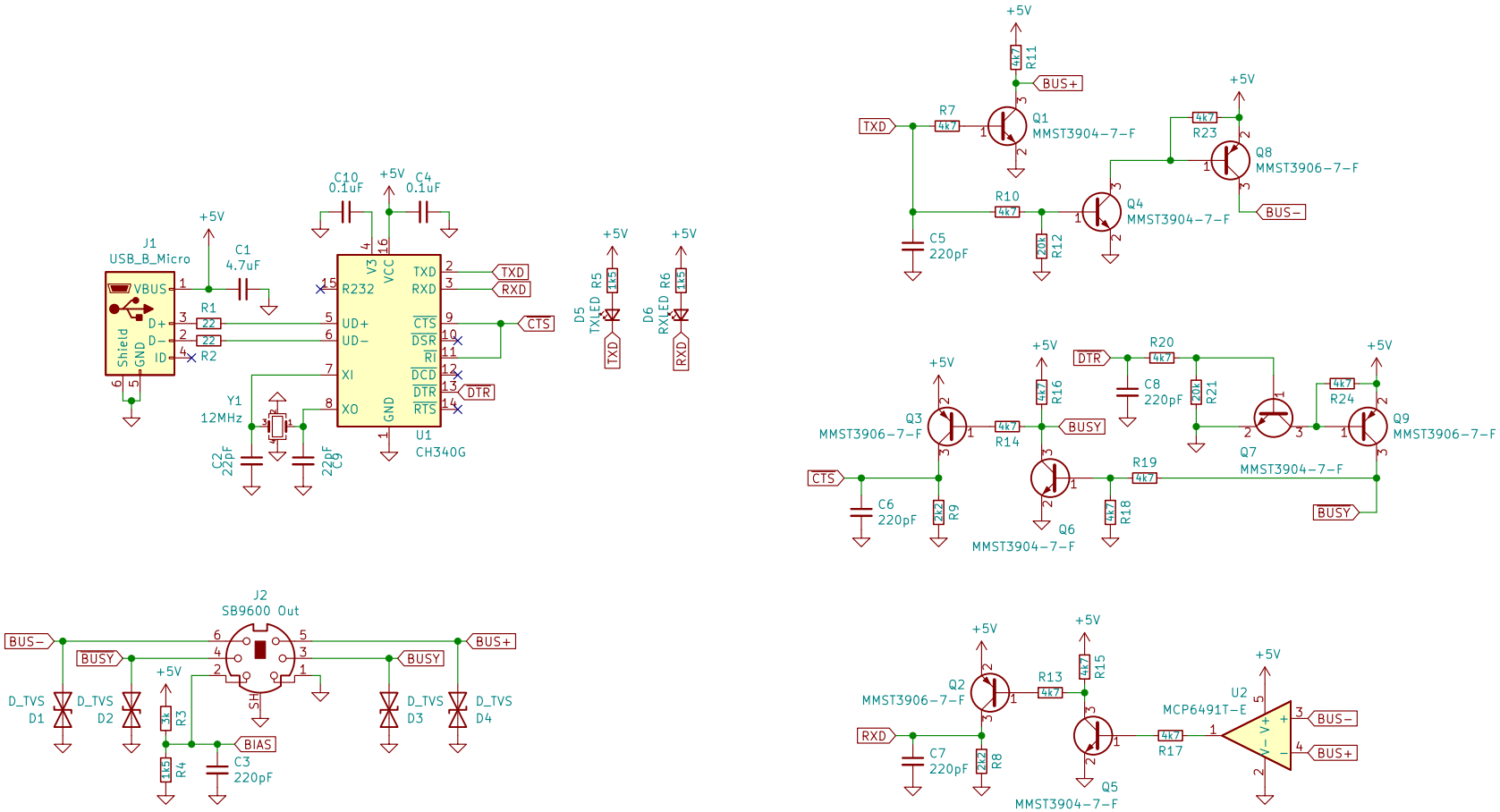

USB based adaption of the RLN4008B schematic

W3AXL

Sheet: /

File: minirib−usb.kicad_sch

Title: MiniRIB−USB

Size: USLetter	Date: 2022−01−21	**Rev: B**
KiCad E.D.A. kicad (6.0.0)		Id: 1/1