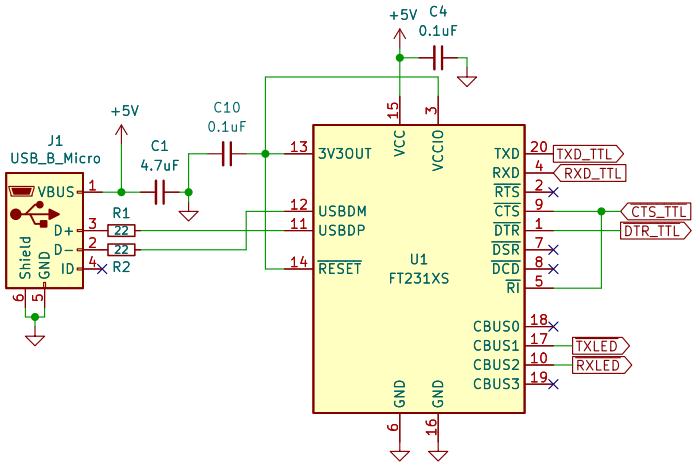

USB to UART

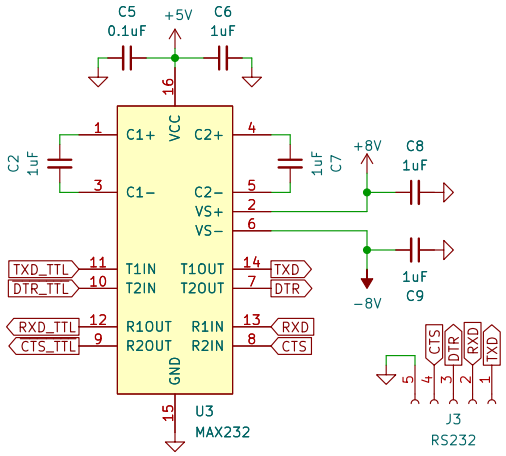

UART to RS232 and +/− Regulators

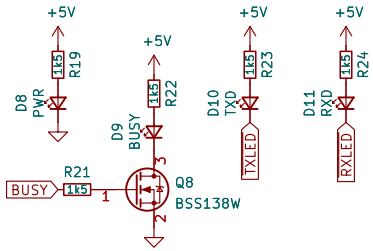

Status LEDs

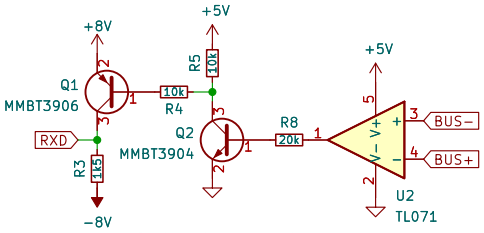

RX Data Differential Decoder

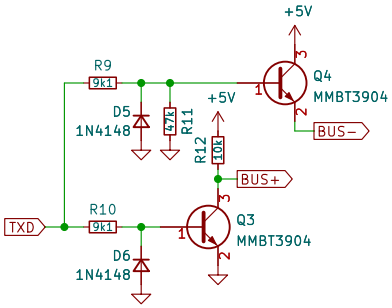

TX Data Differential Encoder

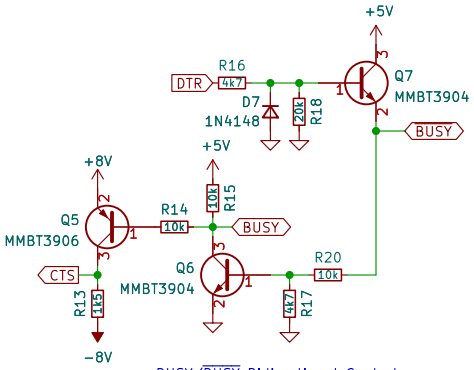

BUSY/$\overline{\text{BUSY}}$ Bidirectional Control

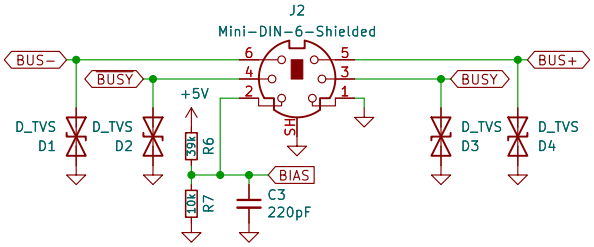

6−pin Mini−Din RIB Output

USB based adaption of the RLN4008B schematic

W3AXL

Sheet: /

File: minirib−usb.kicad_sch

Title: MiniRIB−USB

Size: USLetter	Date: 2022−10−12	**Rev: C**
KiCad E.D.A. kicad (6.0.7)		Id: 1/1