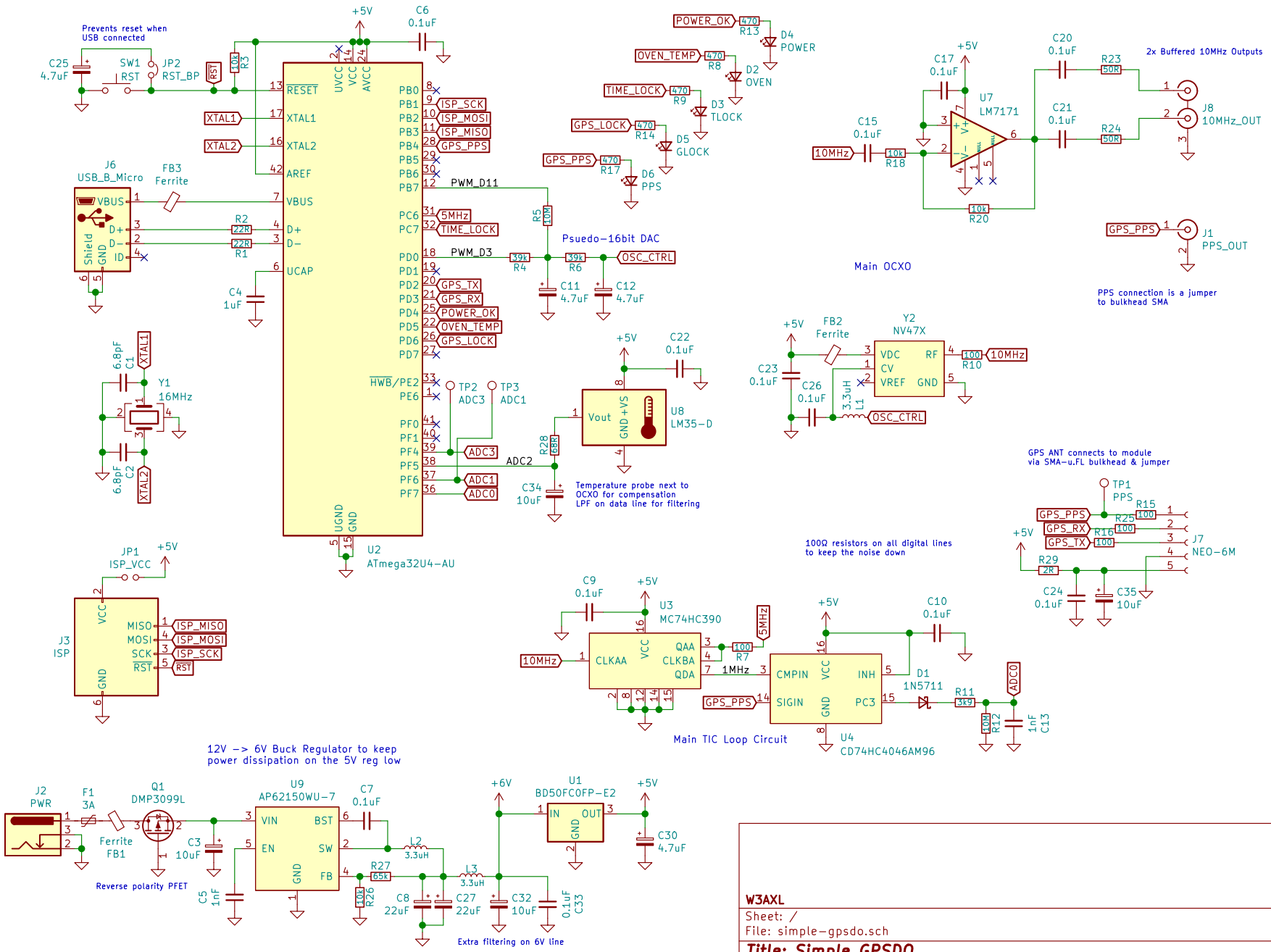

W3AXL

Sheet: /

File: simple-gpsdo.sch

Title: Simple GPSDO

Size: USLetter	Date: 2021-10-22	Rev: D
KiCad E.D.A. kicad (5.1.9)-1		Id: 1/1