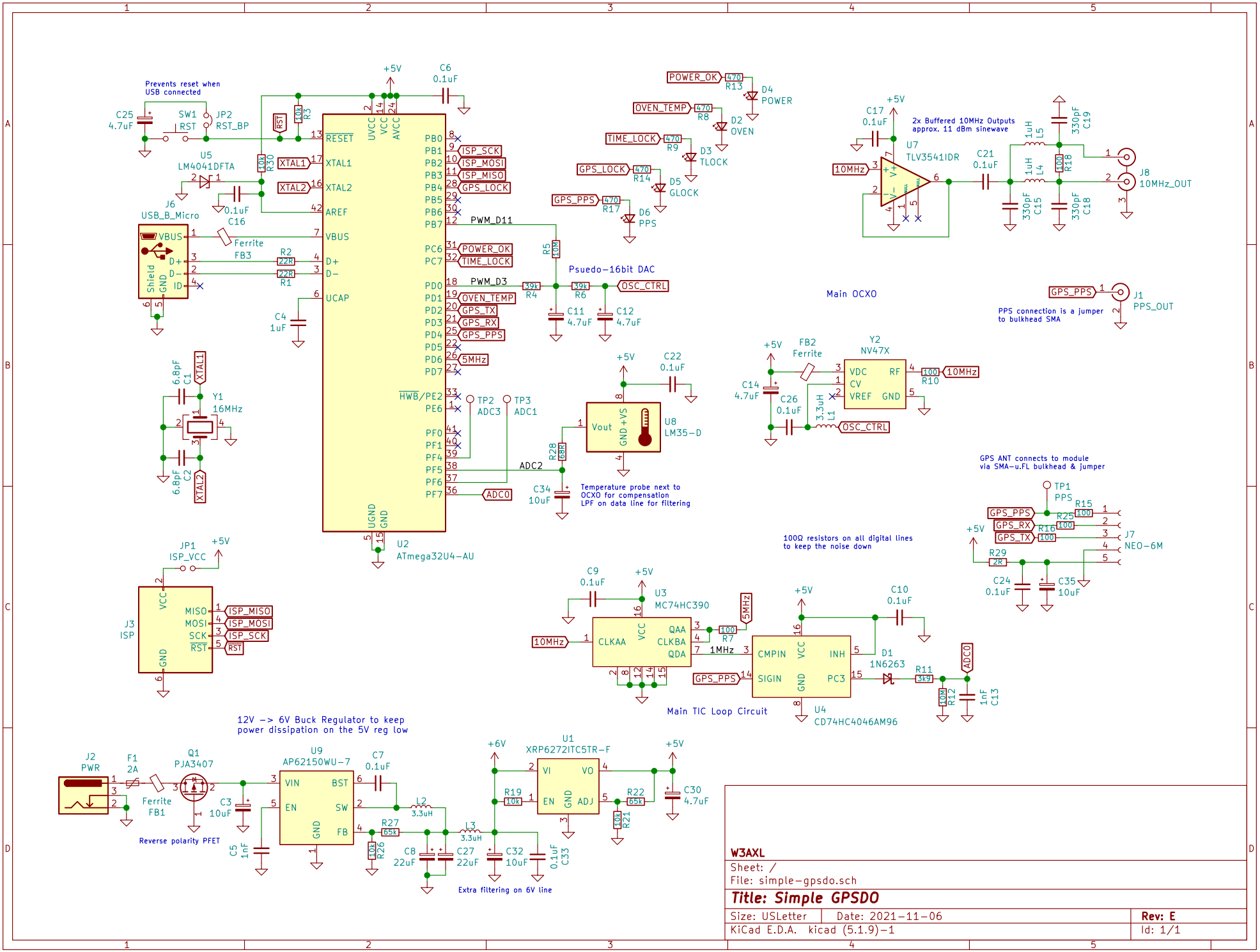
Prevents reset when USB connected
C25 4.7uF
SW1 RST
JP2 RST_BP
U5 LM4041DFTA
J6 USB_B_Micro
Ferrite FB3
C16 0.1uF
R2 22R
R1 22R
C4 1uF
+5V
C6 0.1uF
R3 10k
R30 10k
XTAL1
XTAL2
RESET
AREF
VBUS
D+
D-
UCAP
UVCC
VCC
AVCC
PB0
PB1 ISP_SCK
PB2 ISP_MOSI
PB3 ISP_MISO
PB4 GPS_LOCK
PB5
PB6
PB7 PWM_D11
PC6 POWER_OK
PC7 TIME_LOCK
PD0 PWM_D3
PD1 OVEN_TEMP
PD2 GPS_TX
PD3 GPS_RX
PD4 GPS_PPS
PD5
PD6 5MHz
PD7
HWB/PE2
PE6
PF0
PF1
PF4
PF5 ADC2
PF6
PF7 ADC0
UGND
GND
U2 ATmega32U4-AU
TP2 ADC3
TP3 ADC1
POWER_OK 470 R13 D4 POWER
OVEN_TEMP 470 R8 D2 OVEN
TIME_LOCK 470 R9 D3 TLOCK
GPS_LOCK 470 R14 D5 GLOCK
GPS_PPS 470 R17 D6 PPS
R5 10M
Psuedo-16bit DAC
39k R4
39k R6
OSC_CTRL
C11 4.7uF
C12 4.7uF
C1 6.8pF
C2 6.8pF
Y1 16MHz
C22 0.1uF
U8 LM35-D
Vout
GND +VS
R28 68k
C34 10uF
Temperature probe next to OCXO for compensation
LPF on data line for filtering
JP1 ISP_VCC
J3 ISP
MISO ISP_MISO
MOSI ISP_MOSI
SCK ISP_SCK
RST
C17 0.1uF
U7 TLV3541IDR
10MHz
2x Buffered 10MHz Outputs approx. 11 dBm sinewave
C21 0.1uF
L5 1uH
L4 1uH
C19 330pF
C15 330pF
C18 330pF
R18 100
J8 10MHz_OUT
Main OCXO
GPS_PPS
J1 PPS_OUT
PPS connection is a jumper to bulkhead SMA
FB2 Ferrite
Y2 NV47X
VDC
CV
VREF
RF
GND
R10 100 10MHz
C14 4.7uF
C26 0.1uF
L1 3.3uH
OSC_CTRL
GPS ANT connects to module via SMA-u.FL bulkhead & jumper
TP1 PPS
GPS_PPS
GPS_RX
GPS_TX
R15 100
R25 100
R16 100
J7 NEO-6M
R29 2k
C24 0.1uF
C35 10uF
100Ω resistors on all digital lines to keep the noise down
C9 0.1uF
U3 MC74HC390
CLKAA
VCC
QAA
CLKBA
QDA
10MHz
5MHz
R7 100
1MHz
C10 0.1uF
CMPIN
SIGIN
INH
PC3
GND
D1 1N6263
R11 3k9
R12 10M
C13 1nF
ADC0
U4 CD74HC4046AM96
Main TIC Loop Circuit
12V -> 6V Buck Regulator to keep power dissipation on the 5V reg low
J2 PWR
F1 2A
Ferrite FB1
Q1 PJA3407
Reverse polarity PFET
C3 10uF
C5 1nF
U9 AP62150WU-7
VIN
EN
BST
SW
FB
GND
C7 0.1uF
L2 3.3uH
R27 65k
R26 10k
C8 22uF
C27 22uF
L3 3.3uH
+6V
C32 10uF
0.1uF C33
Extra filtering on 6V line
U1 XRP6272ITC5TR-F
VI
VO
EN
GND
ADJ
R19 10k
R22 65k
R21 10k
C30 4.7uF
W3AXL
Sheet: /
File: simple-gpsdo.sch
Title: Simple GPSDO
Size: USLetter
Date: 2021-11-06
Rev: E
KiCad E.D.A. kicad (5.1.9)-1
Id: 1/1