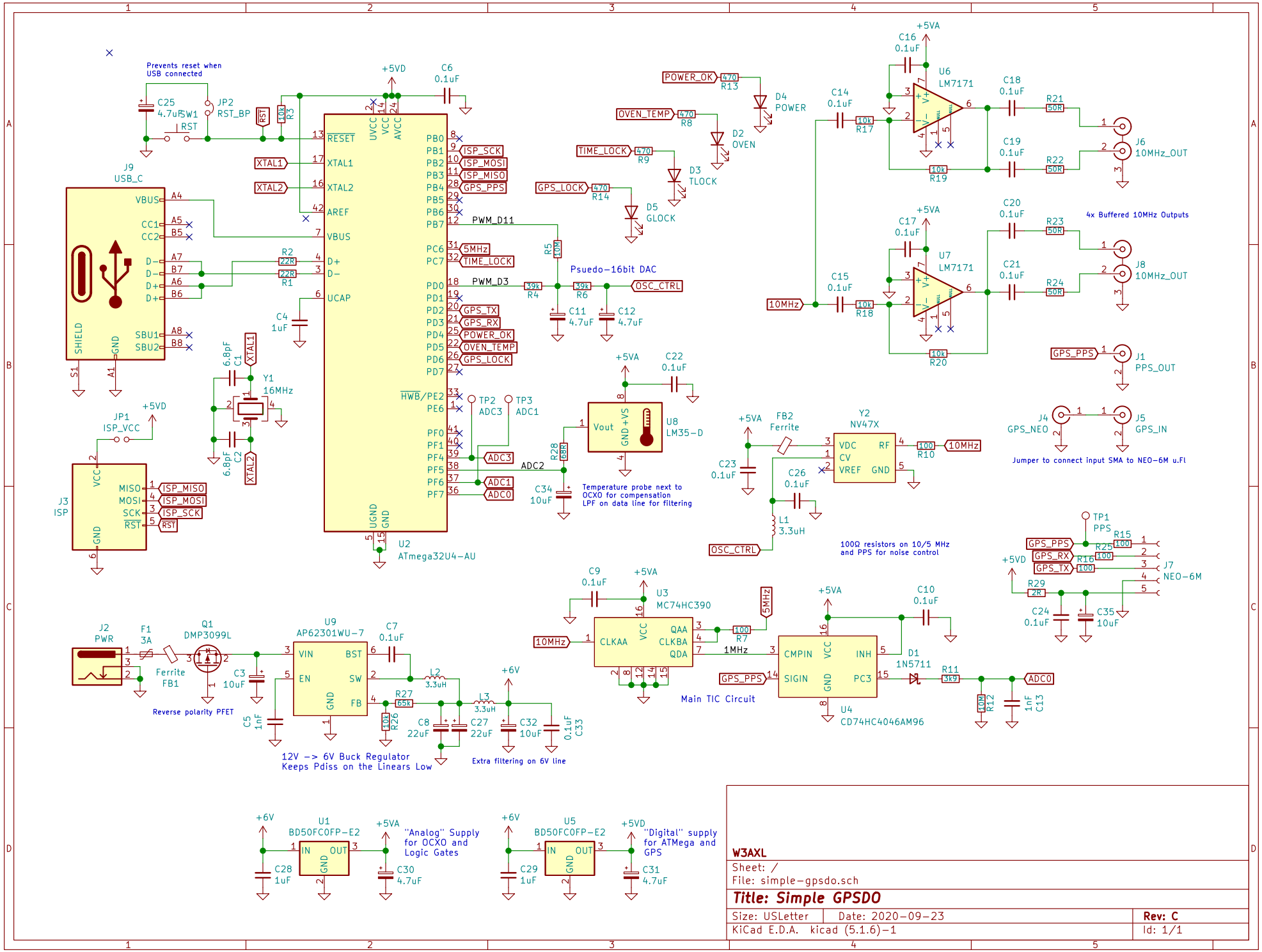

W3AXL

Sheet: /

File: simple-gpsdo.sch

Title: Simple GPSDO

Size: USLetter	Date: 2020-09-23	Rev: C
KiCad E.D.A. kicad (5.1.6)-1		Id: 1/1