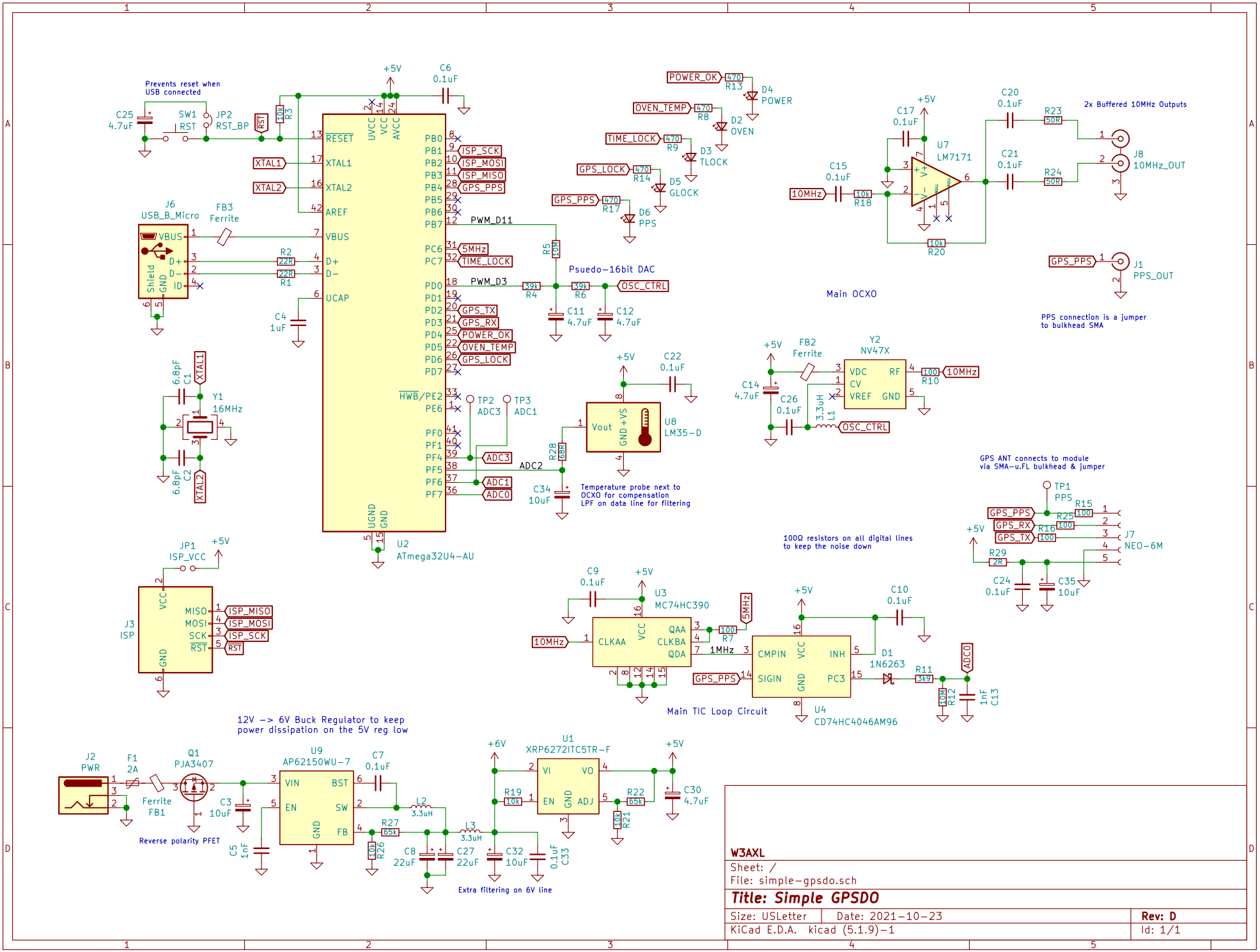
Prevents reset when USB connected
C25 4.7uF
SW1 RST
JP2 RST_BP
RST
10k R3
+5V
C6 0.1uF
U2 ATmega32U4-AU
RESET
XTAL1
XTAL2
AREF
VBUS
D+
D-
UCAP
UVCC VCC AVCC
UGND GND
HWB/PE2
PB0 PB1 PB2 PB3 PB4 PB5 PB6 PB7
PC6 PC7
PD0 PD1 PD2 PD3 PD4 PD5 PD6 PD7
PE6
PF0 PF1 PF4 PF5 PF6 PF7
ISP_SCK ISP_MOSI ISP_MISO GPS_PPS
5MHz TIME_LOCK
PWM_D11
PWM_D3
GPS_TX GPS_RX POWER_OK OVEN_TEMP GPS_LOCK
TP2 ADC3
TP3 ADC1
ADC3 ADC2 ADC1 ADC0
J6 USB_B_Micro
FB3 Ferrite
VBUS D+ D- ID GND Shield
R2 22R
R1 22R
C4 1uF
C1 6.8pF
C2 6.8pF
XTAL1 XTAL2
Y1 16MHz
JP1 ISP_VCC
J3 ISP
MISO MOSI SCK RST
POWER_OK 470 R13 D4 POWER
OVEN_TEMP 470 R8 D2 OVEN
TIME_LOCK 470 R9 D3 TLOCK
GPS_LOCK 470 R14 D5 GLOCK
GPS_PPS 470 R17 D6 PPS
R5 10M
Psuedo-16bit DAC
39k R4
39k R6
OSC_CTRL
C11 4.7uF
C12 4.7uF
C22 0.1uF
U8 LM35-D
Vout GND +VS
R28 68k
C34 10uF
Temperature probe next to OCXO for compensation
LPF on data line for filtering
C17 0.1uF
U7 LM7171
C15 0.1uF
10MHz
10k R18
10k R20
C20 0.1uF
C21 0.1uF
R23 50R
R24 50R
2x Buffered 10MHz Outputs
J8 10MHz_OUT
GPS_PPS
J1 PPS_OUT
Main OCXO
PPS connection is a jumper to bulkhead SMA
FB2 Ferrite
Y2 NV47X
VDC CV VREF RF GND
C14 4.7uF
C26 0.1uF
3.3uH L1
100 R10
GPS ANT connects to module via SMA-u.FL bulkhead & jumper
TP1 PPS
R15 100
R25 100
R16 100
J7 NEO-6M
R29 2k
C24 0.1uF
C35 10uF
100Ω resistors on all digital lines to keep the noise down
C9 0.1uF
U3 MC74HC390
CLKAA VCC QAA CLKBA QDA
100 R7
1MHz
C10 0.1uF
CMPIN VCC INH SIGIN GND PC3
D1 1N6263
R11 3k9
10M R12
1nF C13
ADC0
U4 CD74HC4046AM96
Main TIC Loop Circuit
12V -> 6V Buck Regulator to keep power dissipation on the 5V reg low
J2 PWR
F1 2A
Ferrite FB1
Q1 PJA3407
Reverse polarity PFET
C3 10uF
C5 1nF
U9 AP62150WU-7
VIN EN BST SW FB GND
C7 0.1uF
L2 3.3uH
R27 65k
10k R26
C8 22uF
C27 22uF
L3 3.3uH
C32 10uF
Extra filtering on 6V line
+6V
U1 XRP6272ITC5TR-F
VI VO EN GND ADJ
R19 10k
R22 65k
10k R21
0.1uF C33
C30 4.7uF
W3AXL
Sheet: /
File: simple-gpsdo.sch
Title: Simple GPSDO
Size: USLetter
Date: 2021-10-23
Rev: D
KiCad E.D.A. kicad (5.1.9)-1
Id: 1/1