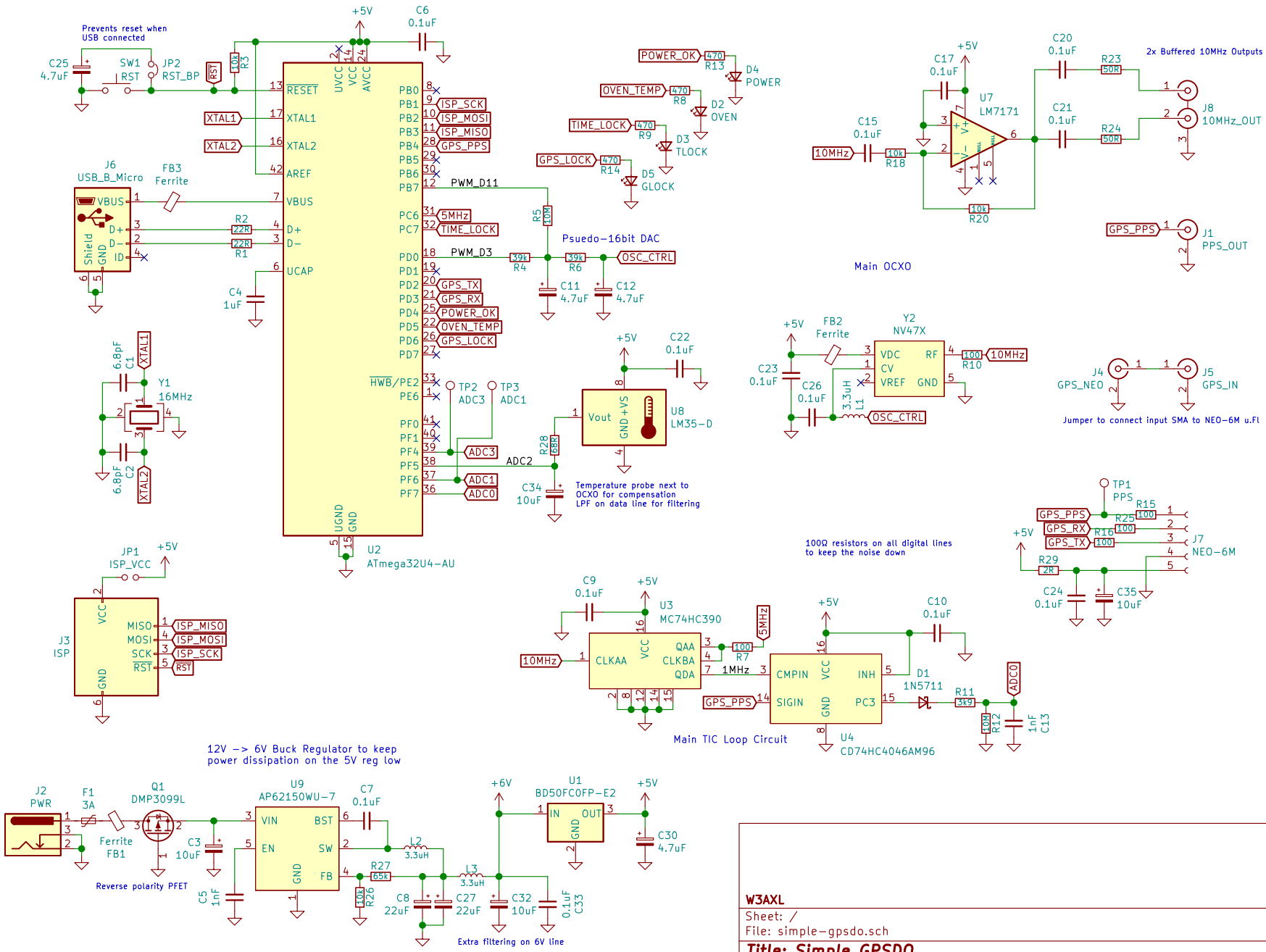

W3AXL	
Sheet: /	
File: simple-gpsdo.sch	
Title: Simple GPSDO	
Size: USLetter	Date: 2021-10-21	**Rev: D**
KiCad E.D.A. kicad (5.1.9)-1	Id: 1/1