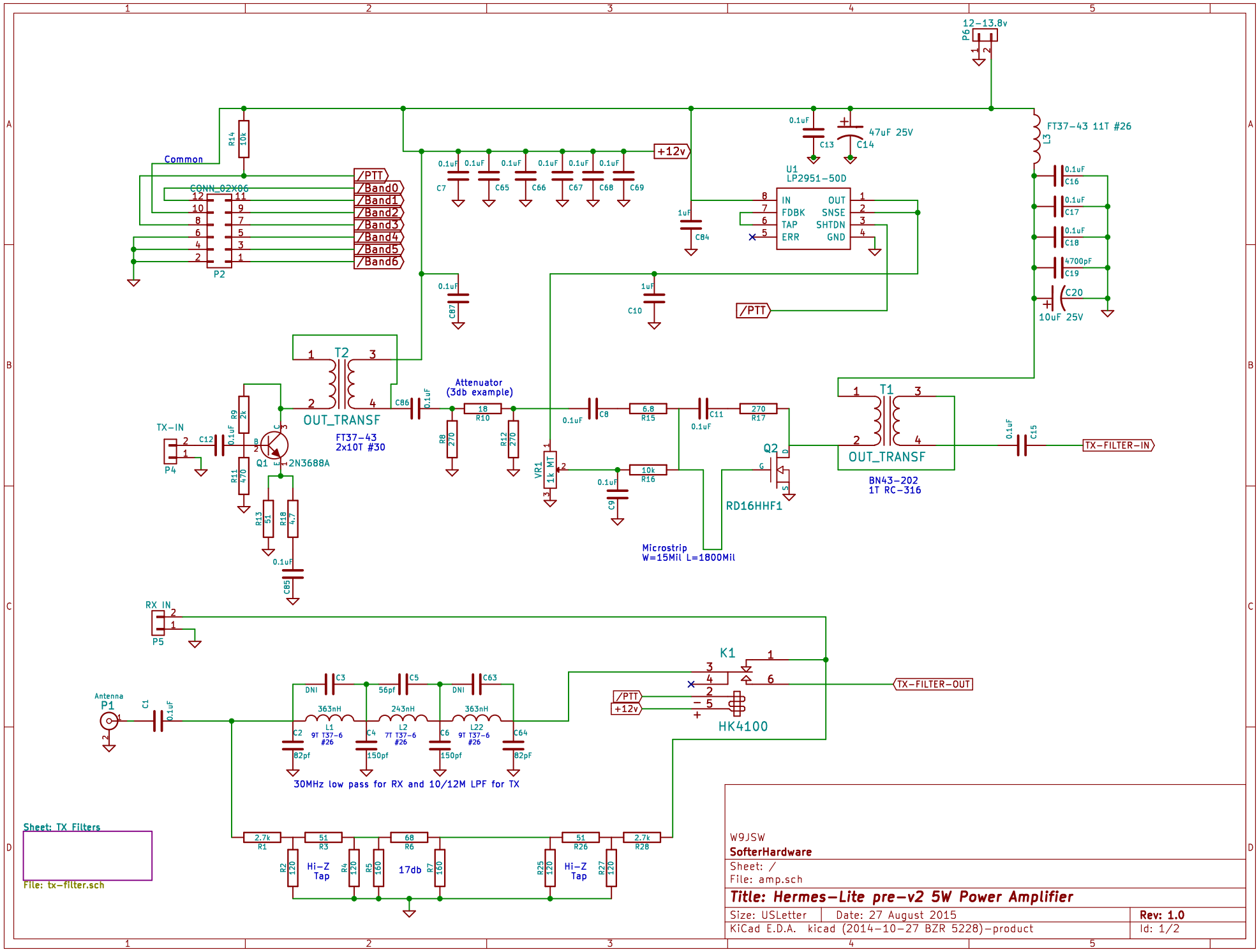
12-13.8v
P6
FT37-43 11T #26
L3
C16
C17
C18
C19
C20
10uF 25V
47uF 25V
C13
C14
U1
LP2951-50D
IN
FDBK
TAP
ERR
OUT
SNSE
SHTDN
GND
+12v
C7
C65
C66
C67
C68
C69
C84
C87
C10
/PTT
Common
CONN_02X06
P2
/Band0
/Band1
/Band2
/Band3
/Band4
/Band5
/Band6
R14
10k
T2
OUT_TRANSF
FT37-43
2x10T #30
C86
Attenuator
(3db example)
R10
18
R12
270
R8
270
C8
R15
6.8
C11
R17
270
R16
10k
C9
VR1
1k MT
Q2
RD16HHF1
Microstrip
W=15Mil L=1800Mil
T1
OUT_TRANSF
BN43-202
1T RC-316
C15
TX-FILTER-IN
TX-IN
P4
C12
R9
2k
R11
470
Q1
2N3688A
R13
51
R18
4.7
C85
RX IN
P5
K1
HK4100
TX-FILTER-OUT
Antenna
P1
C1
C3
DNI
C5
56pf
C63
DNI
363nH
L1
9T T37-6
#26
243nH
L2
7T T37-6
#26
363nH
L22
9T T37-6
#26
C2
82pf
C4
150pf
C6
150pf
C64
82pF
30MHz low pass for RX and 10/12M LPF for TX
R1
2.7k
R3
51
R6
68
R26
51
R28
2.7k
R2
120
Hi-Z
Tap
R4
120
R5
160
17db
R7
160
R25
120
Hi-Z
Tap
R27
120
Sheet: TX Filters
File: tx-filter.sch
W9JSW
SofterHardware
Sheet: /
File: amp.sch
Title: Hermes-Lite pre-v2 5W Power Amplifier
Size: USLetter
Date: 27 August 2015
Rev: 1.0
KiCad E.D.A. kicad (2014-10-27 BZR 5228)-product
Id: 1/2

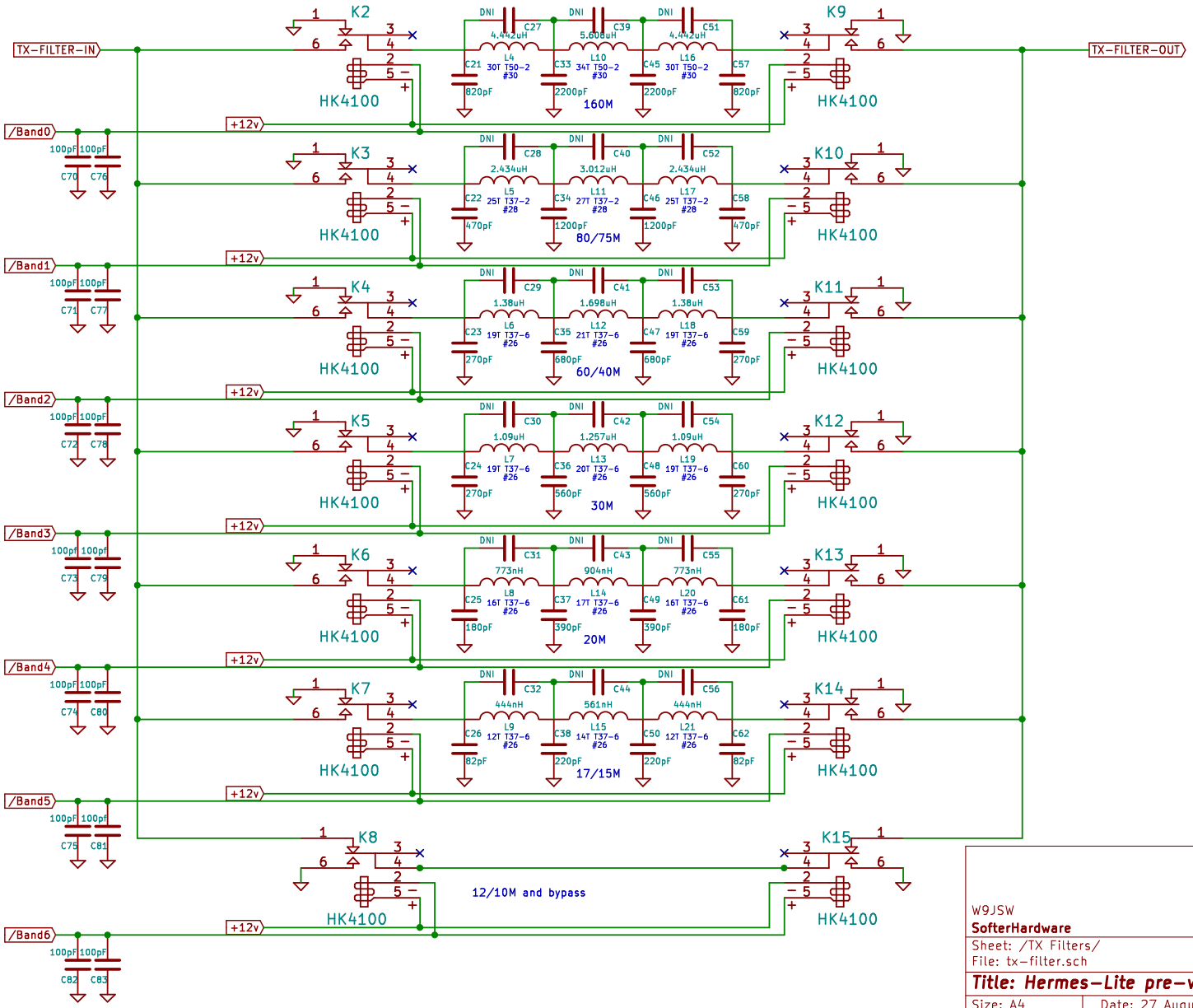

W9JSW

SofterHardware

Sheet: /TX Filters/

File: tx-filter.sch

Title: Hermes-Lite pre-v2 5W Power Amplifier

Size: A4	Date: 27 August 2015	**Rev: 1.0**
KiCad E.D.A. kicad (2014-10-27 BZR 5228)-product		Id: 2/2