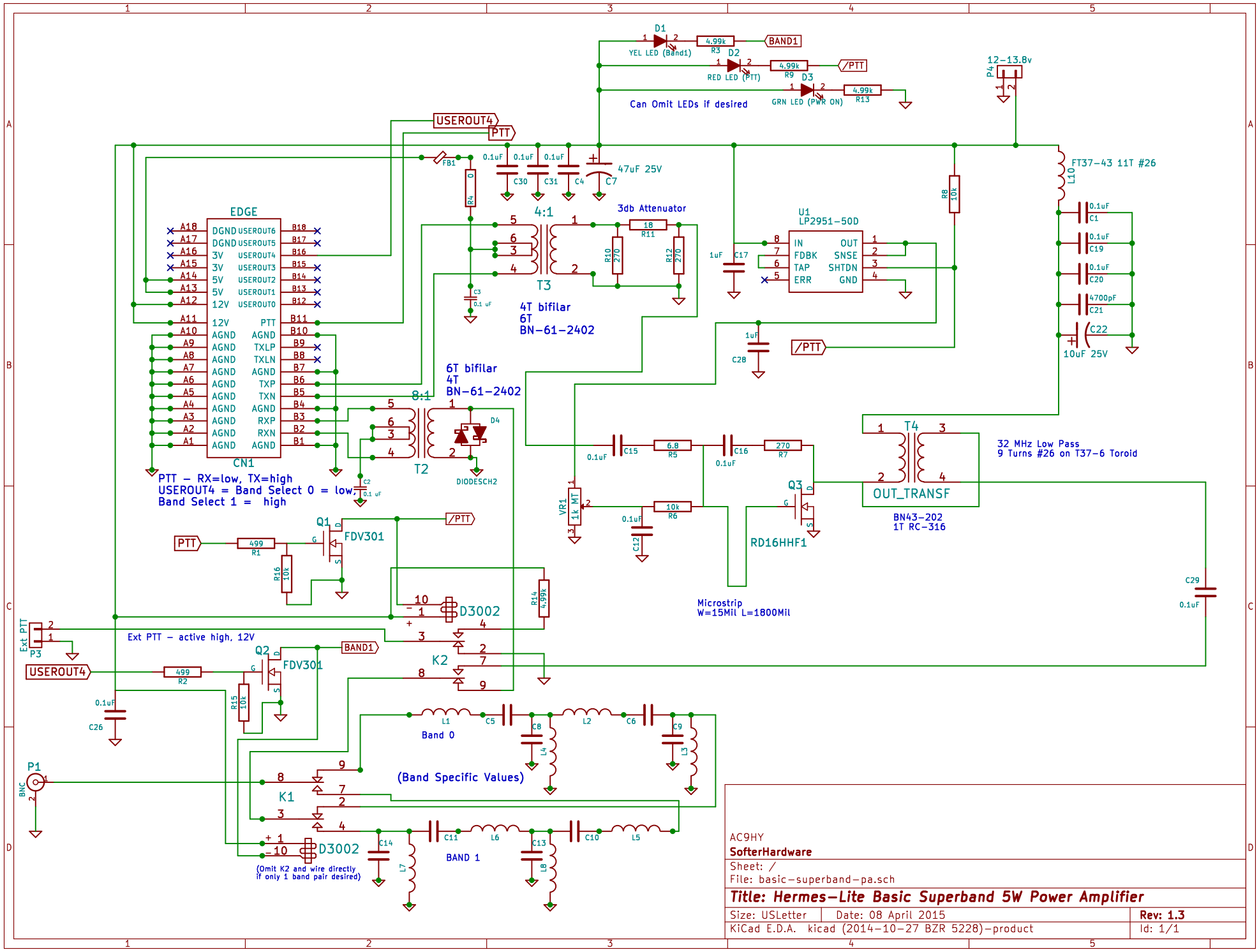

AC9HY
SofterHardware
Sheet: /
File: basic-superband-pa.sch

Title: Hermes-Lite Basic Superband 5W Power Amplifier

Size: USLetter	Date: 08 April 2015	**Rev: 1.3**
KiCad E.D.A. kicad (2014-10-27 BZR 5228)-product		Id: 1/1