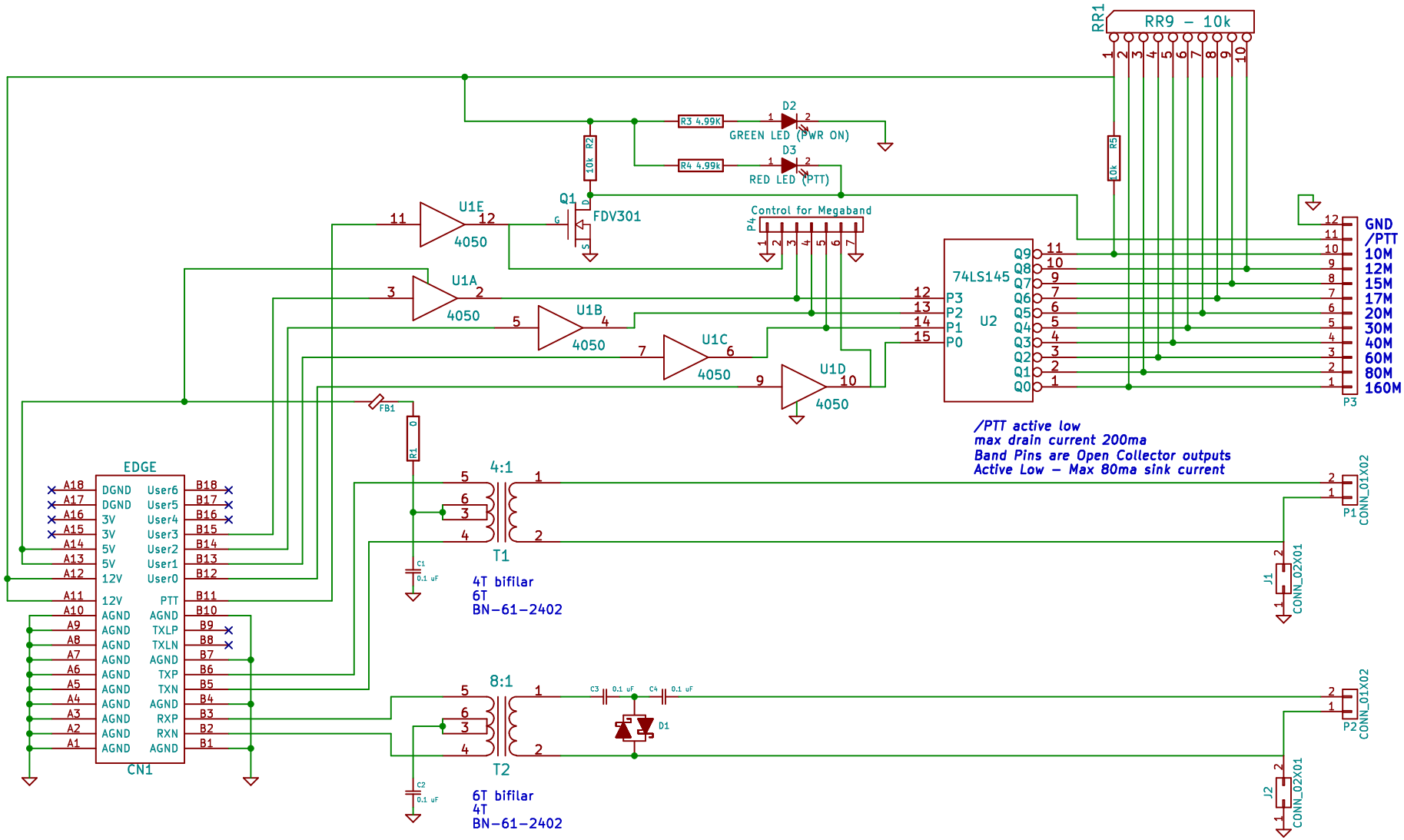

AC9HY

SofterHardware

Sheet: /

File: frontend.sch

Title: Hermes–Lite Megaband RF Frontend

Size: USLetter	Date: 14 February 2015	**Rev: 1.0**
KiCad E.D.A. kicad (2014-10-27 BZR 5228)-product		Id: 1/1