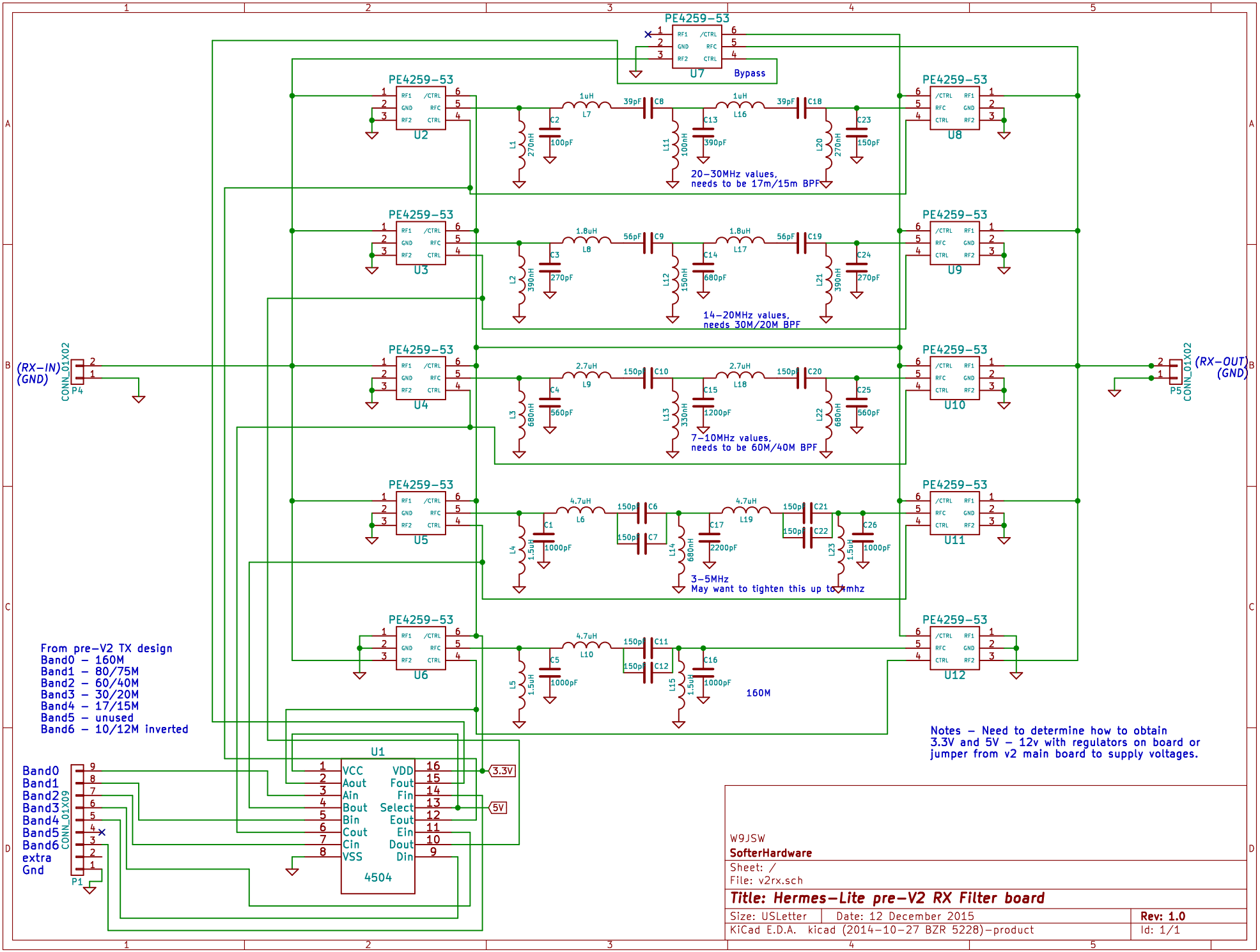

W9JSW
SofterHardware
Sheet: /
File: v2rx.sch

Title: Hermes-Lite pre-V2 RX Filter board

Size: USLetter	Date: 12 December 2015	**Rev: 1.0**
KiCad E.D.A. kicad (2014-10-27 BZR 5228)-product		Id: 1/1