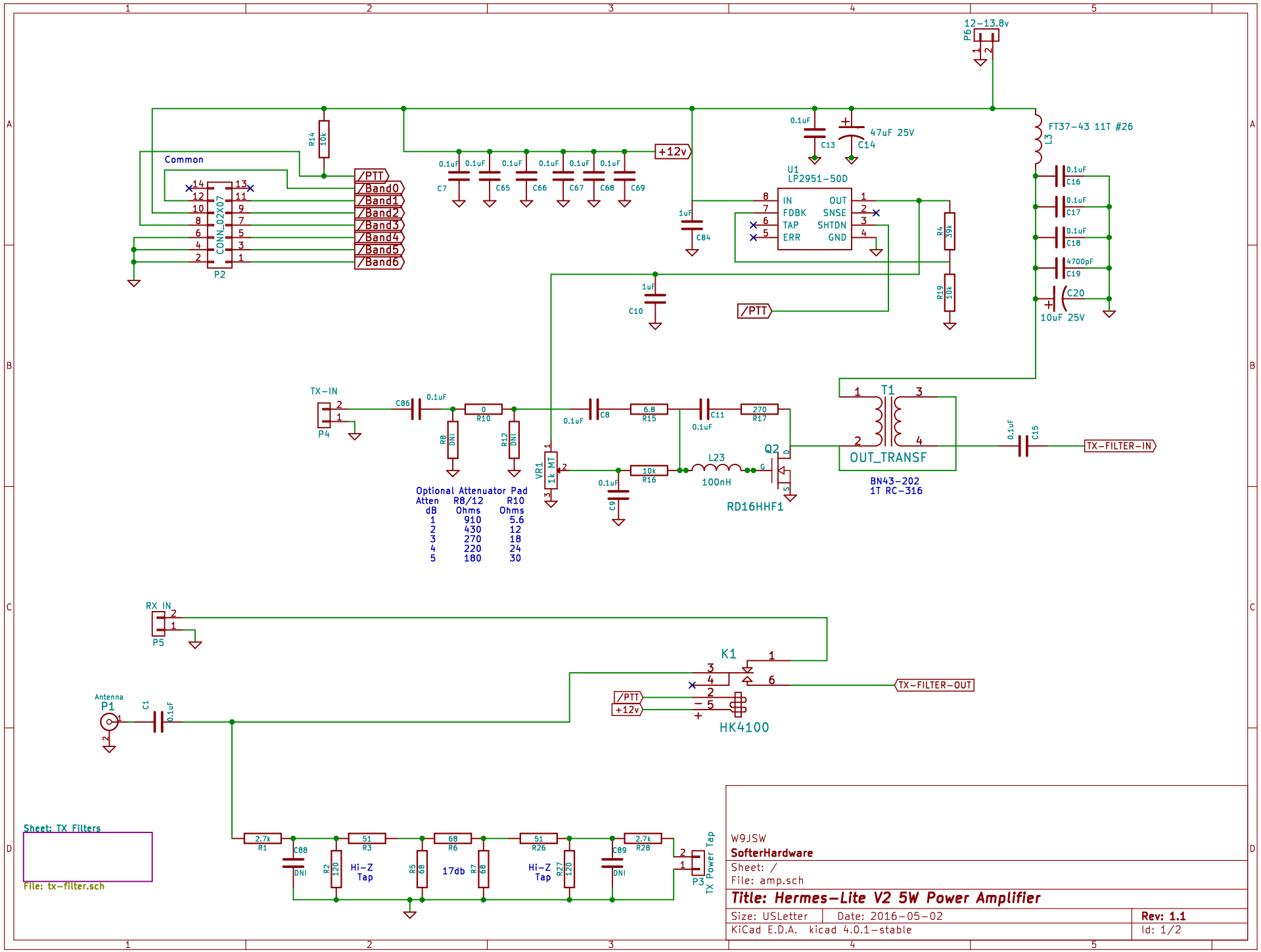
12-13.8v
P6
FT37-43 11T #26
L3
0.1uF
C16
0.1uF
C17
0.1uF
C18
4700pF
C19
C20
10uF 25V
0.1uF
C13
47uF 25V
C14
U1
LP2951-50D
IN
FDBK
TAP
ERR
OUT
SNSE
SHTDN
GND
R4
39k
R19
10k
/PTT
+12v
0.1uF
C7
C65
C66
C67
C68
C69
1uF
C84
1uF
C10
R14
10k
Common
CONN_02X07
P2
/PTT
/Band0
/Band1
/Band2
/Band3
/Band4
/Band5
/Band6
TX-IN
P4
C86
0.1uF
R10
0
R8
DNI
R12
DNI
0.1uF
C8
R15
6.8
0.1uF
C11
R17
270
VR1
1k MT
R16
10k
0.1uF
C9
L23
100nH
Q2
RD16HHF1
T1
OUT_TRANSF
BN43-202
1T RC-316
0.1uF
C15
TX-FILTER-IN
Optional Attenuator Pad
Atten R8/12 R10
dB Ohms Ohms
1 910 5.6
2 430 12
3 270 18
4 220 24
5 180 30
RX IN
P5
K1
TX-FILTER-OUT
/PTT
+12v
HK4100
Antenna
P1
C1
0.1uF
Sheet: TX Filters
File: tx-filter.sch
2.7k
R1
C88
DNI
51
R3
R2
120
Hi-Z
Tap
68
R6
R5
68
17db
R7
68
51
R26
R27
120
Hi-Z
Tap
C89
DNI
2.7k
R28
P3
TX Power Tap
W9JSW
SofterHardware
Sheet: /
File: amp.sch
Title: Hermes-Lite V2 5W Power Amplifier
Size: USLetter
Date: 2016-05-02
Rev: 1.1
KiCad E.D.A. kicad 4.0.1-stable
Id: 1/2

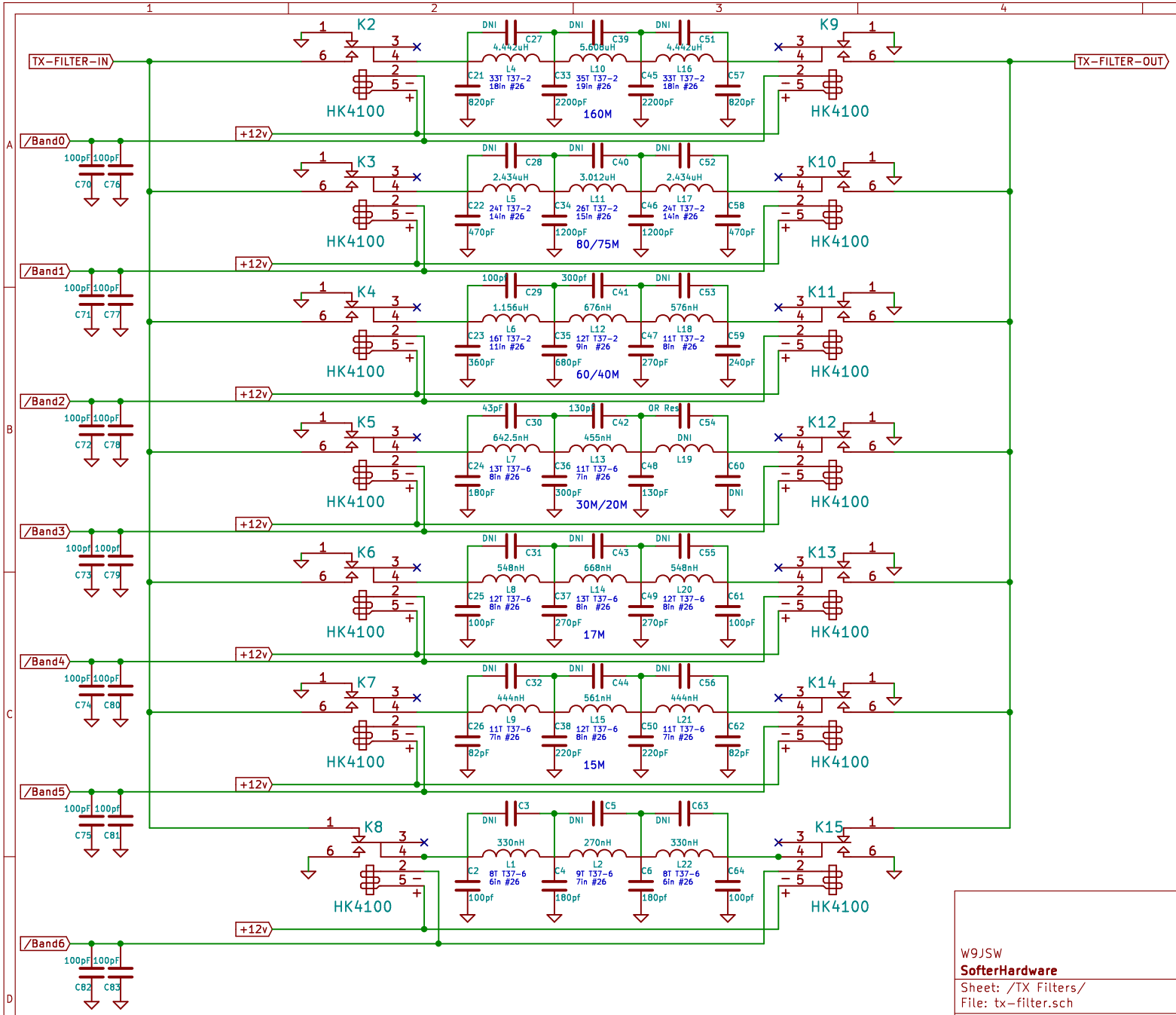

W9JSW

SofterHardware

Sheet: /TX Filters/

File: tx-filter.sch

Title: Hermes-Lite V2 5W Power Amplifier

Size: A4	Date: 2016-05-02	**Rev: 1.1**
KiCad E.D.A. kicad 4.0.1-stable		Id: 2/2