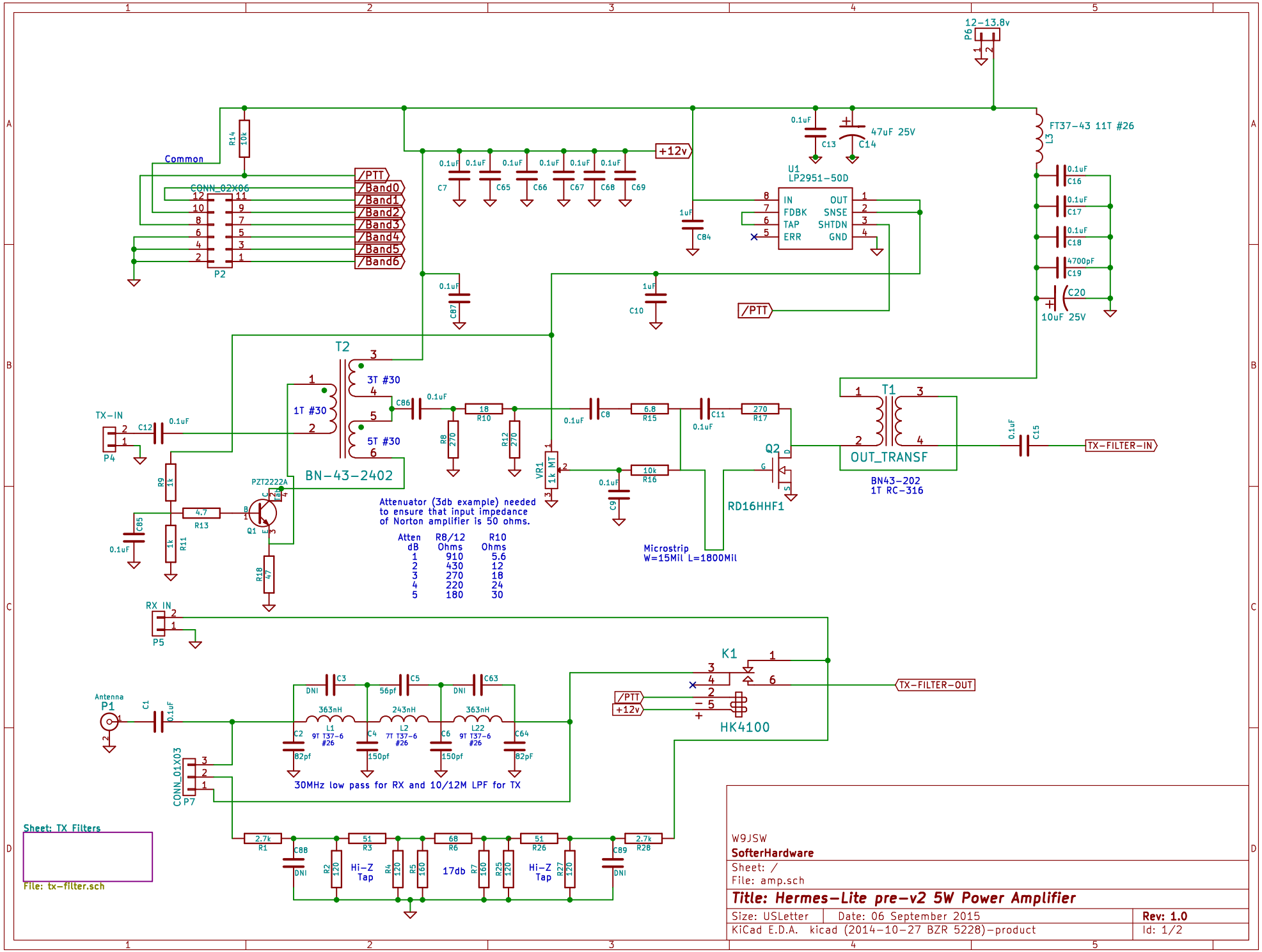
12-13.8v
P6
FT37-43 11T #26
L3
C16 0.1uF
C17 0.1uF
C18 0.1uF
C19 4700pF
C20 10uF 25V
C13 0.1uF
C14 47uF 25V
U1
LP2951-50D
IN FDBK TAP ERR
OUT SNSE SHTDN GND
C84 1uF
C10 1uF
C87 0.1uF
+12v
C7 0.1uF
C65 0.1uF
C66 0.1uF
C67 0.1uF
C68 0.1uF
C69 0.1uF
Common
R14 10k
CONN_02X06
P2
/PTT
/Band0
/Band1
/Band2
/Band3
/Band4
/Band5
/Band6
T2
3T #30
1T #30
5T #30
BN-43-2402
C86 0.1uF
R10 18
R8 270
R12 270
C8 0.1uF
R15 6.8
C11 0.1uF
R17 270
VR1 1k MT
R16 10k
C9 0.1uF
Q2
RD16HHF1
T1
OUT_TRANSF
BN43-202
1T RC-316
C15 0.1uF
TX-FILTER-IN
TX-IN
P4
C12 0.1uF
R9 1k
R11 1k
C85 0.1uF
R13 4.7
PZT2222A
Q1
R18 47
Attenuator (3db example) needed
to ensure that input impedance
of Norton amplifier is 50 ohms.
Atten dB R8/12 Ohms R10 Ohms
1 910 5.6
2 430 12
3 270 18
4 220 24
5 180 30
Microstrip
W=15Mil L=1800Mil
RX IN
P5
K1
HK4100
TX-FILTER-OUT
Antenna
P1
C1 0.1uF
CONN_01X03
P7
C3 DNI
C5 56pf
C63 DNI
L1 363nH 9T T37-6 #26
L2 243nH 7T T37-6 #26
L22 363nH 9T T37-6 #26
C2 82pf
C4 150pf
C6 150pf
C64 82pf
30MHz low pass for RX and 10/12M LPF for TX
R1 2.7k
C88 DNI
R3 51
R2 120
Hi-Z Tap
R4 120
R5 160
R6 68
17db
R7 160
R25 120
R26 51
Hi-Z Tap
R27 120
C89 DNI
R28 2.7k
Sheet: TX Filters
File: tx-filter.sch
W9JSW
SofterHardware
Sheet: /
File: amp.sch
Title: Hermes-Lite pre-v2 5W Power Amplifier
Size: USLetter
Date: 06 September 2015
Rev: 1.0
KiCad E.D.A. kicad (2014-10-27 BZR 5228)-product
Id: 1/2

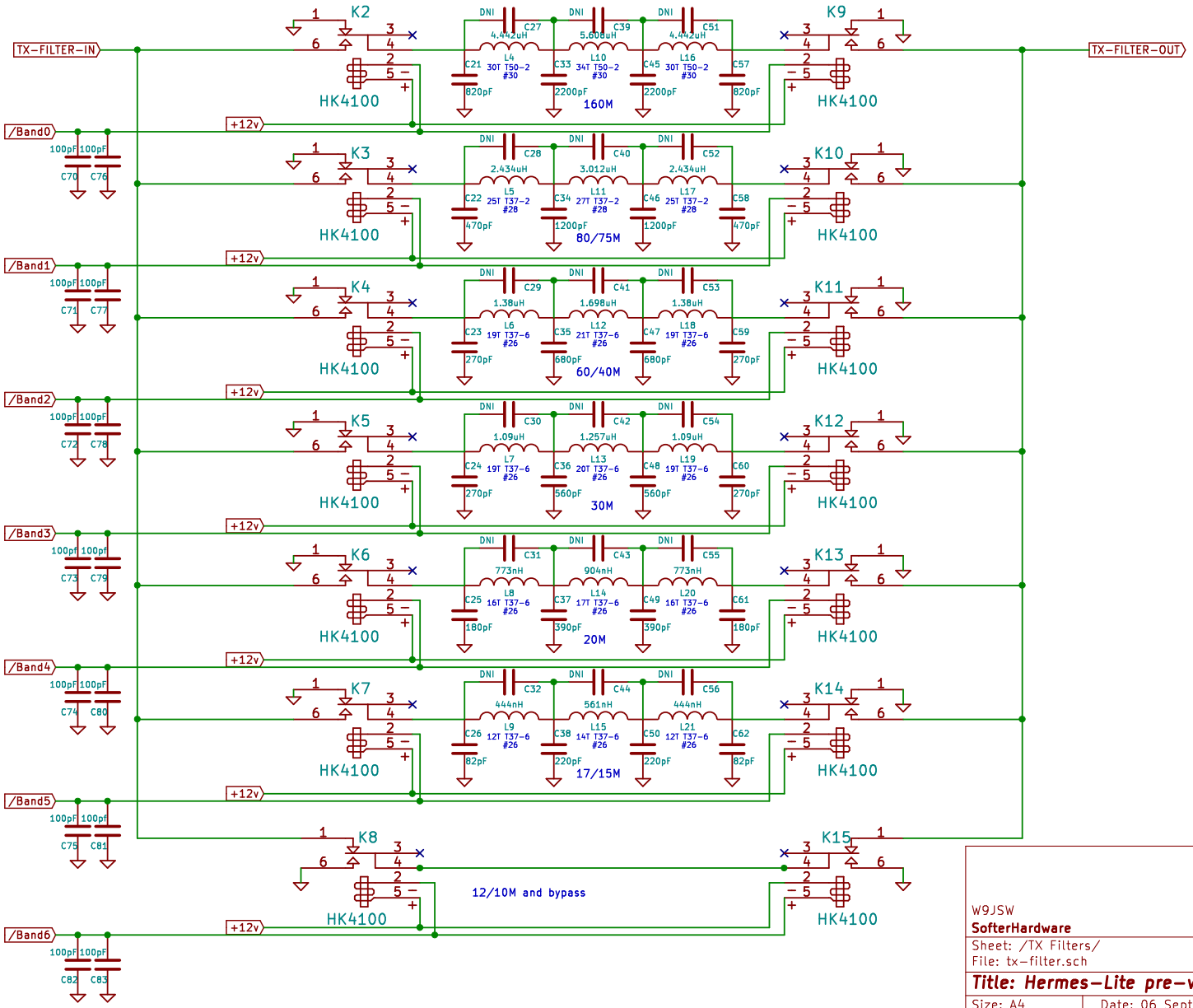

W9JSW
SofterHardware
Sheet: /TX Filters/
File: tx-filter.sch

Title: Hermes-Lite pre-v2 5W Power Amplifier

Size: A4	Date: 06 September 2015	**Rev: 1.0**
KiCad E.D.A. kicad (2014-10-27 BZR 5228)-product		Id: 2/2