Distributed Secondary Voltage and Frequency Restoration Control of Droop-Controlled Inverter-Based Microgrids

Fanghong Guo, Changyun Wen, *Fellow, IEEE*, Jianfeng Mao, *Member, IEEE*, and Yong-Duan Song, *Senior Member, IEEE*

***Abstract*—In this paper, restorations for both voltage and frequency in the droop-controlled inverter-based islanded microgrid (MG) are addressed. A distributed finite-time control approach is used in the voltage restoration which enables the voltages at all the distributed generations (DGs) to converge to the reference value in finite time, and thus, the voltage and frequency control design can be separated. Then, a consensus-based distributed frequency control is proposed for frequency restoration, subject to certain control input constraints. Our control strategies are implemented on the local DGs, and thus, no central controller is required in contrast to existing control schemes proposed so far. By allowing these controllers to communicate with their neighboring controllers, the proposed control strategy can restore both voltage and frequency to their respective reference values while having accurate real power sharing, under a sufficient local stability condition established. An islanded MG test system consisting of four DGs is built in MATLAB to illustrate our design approach, and the results validate our proposed control strategy.**

***Index Terms*—Decoupled control, distributed control, finite-time control, microgrids (MGs), power sharing, secondary control.**

I. Introduction

THE Microgrid (MG) integrates a large amount of renewable energy sources, energy storage systems, and local loads to form small-scale low- and medium-voltage level power systems [1]–[3]. Compared to the traditional fossil-fuel-based power grid, benefits brought by MG include less carbon consumption, faster demand response, and so on [4]–[6]. In general, an MG can operate in two modes, i.e., the grid-connected and the islanded mode [7], [8]. In the grid-connected mode, the MG is connected to the main power grid by closing the isolation switch (IS) in the point of common coupling. Due to the larger capacity of the main grid, the dynamics of the MG is dominated by the main grid. Thus, the MG control task in this mode is to deliver the scheduled real and reactive power to the main grid [7]. When MG opens the IS and works in the islanded mode, it should not only maintain its own voltage and frequency to certain reference values but also redispatch the real and reactive power among the distributed generations (DGs) and loads [8]. The control of MG in this mode becomes much more complicated and challenging.

Recently, in order to standardize its operation and functionality, hierarchical control for islanded MG systems has been proposed [9], [10]. It divides the control structure into three layers, *namely*, primary, secondary, and tertiary control. The primary control is based on each local DG controller [11]. However, there are some drawbacks in the primary control layer, such as voltage and frequency deviation caused by droop control [12]. Then, a secondary control is proposed to restore the frequency and voltage to their reference values. In the tertiary control, economic dispatch and power flow optimization issues are usually considered.

In this paper, we focus on the secondary control layer, where a distributed control structure for an islanded MG system is to be proposed. Conventionally, the secondary control is based on an MG central controller (MGCC), which collects all the information of the individual MG and then sends back the control command to each MG as their primary control [7]. This method has certain intrinsic disadvantages such as poor control dynamics and the need of a central computing and communication unit. Also, it may suffer from single-point failures. In order to solve these problems, a distributed control structure can be applied in the secondary control, *namely*, each local DG controller communicates with its neighboring DGs and no central controller is needed. This kind of distributed control strategy has been reported in [13]–[16]. In [13], a distributed cooperative secondary control of MG is proposed using feedback linearization. It is assumed that not every DG in the system can directly access the reference frequency and voltage values. By allowing controllers to communicate with their neighbors, they can ensure that the frequency and voltage finally reach their reference values. However, the inherently existing coupling between

Manuscript received August 4, 2014; revised October 16, 2014; accepted November 7, 2014. Date of publication December 10, 2014; date of current version May 15, 2015. This work was supported in part by the Major State Basic Research Development Program 973 under Grant 2012CB215202 and in part by the National Natural Science Foundation of China under Grant 61134001. The work was also jointly supported by Singapore's National Research Foundation under NRF-CRP8-2011-03 and the Energy Research Institute at NTU (ERI@N). *(Corresponding author: Y.-D. Song).*

F. Guo is with the Energy Research Institute at NTU (ERI@N), Interdisciplinary Graduate School, Nanyang Technological University, Singapore 639798 (e-mail: fguo003@e.ntu.edu.sg).

C. Wen is with the School of Electrical and Electronic Engineering, Nanyang Technological University, Singapore 639798 (e-mail: ecywen@ntu.edu.sg).

J. Mao is with the School of Mechanical and Aerospace Engineering, Nanyang Technological University, Singapore 639798 (e-mail: jfmao@ntu.edu.sg).

Y.-D. Song is with the Key Laboratory of Dependable Service Computing in Cyber Physical Society of Ministry of Education and the School of Automation, Chongqing University, Chongqing 400044, China (e-mail: ydsong@cqu.edu.cn).

Color versions of one or more of the figures in this paper are available online at http://ieeexplore.ieee.org.

Digital Object Identifier 10.1109/TIE.2014.2379211

0278-0046 © 2014 IEEE. Personal use is permitted, but republication/redistribution requires IEEE permission.
See http://www.ieee.org/publications_standards/publications/rights/index.html for more information.
Authorized licensed use limited to: Northeastern University. Downloaded on July 15,2023 at 08:09:13 UTC from IEEE Xplore. Restrictions apply.

frequency and voltage is not considered. Similarly in [14], the approach is employed to convert the secondary voltage control to a linear second-order tracker synchronization problem. A general distributed approach is proposed in [15] to regulate the frequency and voltage as well as the reactive power. However, the distributed control scheme used requires that each local controller communicates with all the other controllers in the entire system, which almost has the same communication cost as a centralized controller. In addition, no analysis on the dynamics and stability of the whole system is provided. A distributed averaging proportional integral (PI) controller is proposed in [16] to remove the frequency deviation while the power sharing property still holds. A first-order inverter model is derived by applying the results in the theory of coupled oscillators. This is achieved under the assumption that the node voltage remains constant. Also, voltage restoration is not considered.

In this paper, we start with analyzing the dynamics of the DG units and the power network. Under the assumption of a purely inductive transmission line, a simplified dynamic model of the islanded MG is derived. We next design distributed voltage controllers to restore the voltage magnitudes to their reference values for all DGs within finite time. Then, a consensus-based distributed frequency control is designed. In the case of frequency restoration, there also exists a challenge that the control inputs should be equal to each other in their steady state in order to meet the power sharing property. A distributed proportional and integral method is proposed to handle such a constraint. A sufficient condition for frequency restoration is also established.

In summary, the main contributions of this paper are threefold.

1) Both frequency and voltage restorations are addressed. A finite-time voltage control is first proposed in islanded MG control to ensure that the voltage magnitudes are restored to their reference values for all DGs within finite time, regardless of frequency control. This enables the frequency and voltage control to be designed separately.
2) A distributed consensus-based frequency control method is derived to restore the frequency to its reference value while maintaining the real power sharing accuracy.
3) In contrast to existing schemes that require a central computing and communication controller, the proposed distributed secondary control strategy is implemented on local DG controllers, which can avoid single-point failure and thus is more reliable and economically efficient.

The remainder of this paper is organized as follows. In Section II, we introduce the models of the MGs, including DG and network models. The distributed secondary controller involving both voltage and frequency control is designed and analyzed in Section III. Section IV presents simulation results to validate our method. This paper is concluded in Section V.

II. Modeling of MG

A schematic diagram of a generic islanded MG with a total of N DGs is shown in Fig. 1. Each DG has been connected with respective local loads. They are integrated through an MG network. Hence, the model of islanded MG mainly consists of two parts, i.e., the DG model and MG network model.

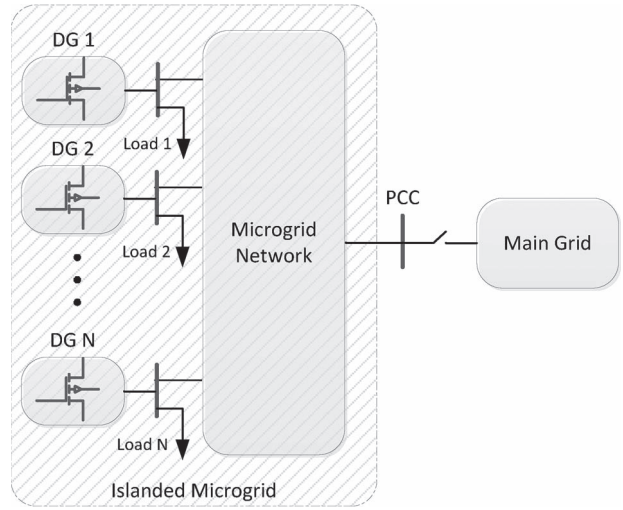

Fig. 1. Schematic diagram of a generic islanded MG.

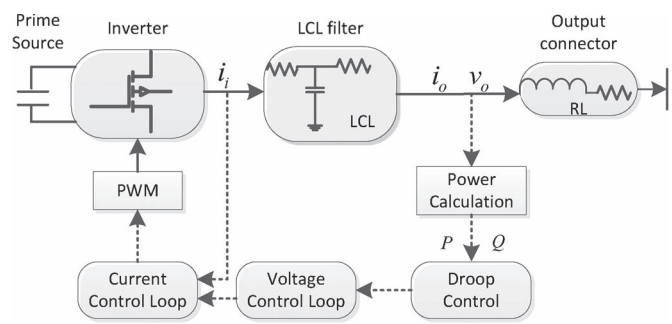

Fig. 2. Scheme of a local primary inverter controller.

A. DG Model

In a general ac MG system, each DG consists of a prime dc source, a dc/ac inverter, an LCL filter, and an RL output connector [9], as shown in Fig. 2. These inverters operate in the voltage control mode when the MG is islanded [7]. Generally, there are three control loops, *namely*, the voltage control loop, current control loop, and droop control loop, in the primary DG controller. Its detailed mathematical model is introduced in [11]. It is also analyzed in [11] that there is a wide frequency range for this primary controller. The dynamics of the LCL filter, the RL output connector, and the voltage and current control loop are much faster than that of the droop control function. Hence, we can remodel the primary controller by only considering the dynamics of the droop control function and neglecting the dynamics of the other four fast-dynamic blocks.

The droop control is to regulate the phase angle δ_i and voltage amplitude V_i by using the locally measured real power and reactive power information, respectively. According to the Consortium for Electric Reliability Technology Solutions (CERTS) droop control function [5], the phase angle and voltage droop of the ith DG are

$$\dot{\delta}_i = \omega^d - k_{P_i}\left(P_i^m - P_i^d\right) \tag{1}$$

$$k_{V_i}\dot{V}_i = \left(V^d - V_i\right) - k_{Q_i}\left(Q_i^m - Q_i^d\right) \tag{2}$$

where ω^d and V^d are the desired frequency and voltage amplitude, respectively, k_{V_i} is the voltage control gain, k_{P_i} and k_{Q_i}

Authorized licensed use limited to: Northeastern University. Downloaded on July 15,2025 at 08:09:13 UTC from IEEE Xplore. Restrictions apply.

are the frequency and voltage droop gains, respectively, P_i^m and Q_i^m are the measured real and reactive powers, and P_i^d and Q_i^d are the desired real and reactive powers, respectively.

The measured P_i^m and Q_i^m can be obtained through the following first-order low-pass filters as

$$\tau_{P_i}\dot{P_i}^m = -P_i^m + P_i \tag{3}$$

$$\tau_{Q_i}\dot{Q_i}^m = -Q_i^m + Q_i \tag{4}$$

where τ_{P_i} and τ_{Q_i} denote the respective time constants of the two filters and P_i and Q_i are the real and reactive power outputs of the ith DG.

The derivative of the phase angle can be represented in terms of ω_i as follows:

$$\dot{\delta}_i = \omega_i. \tag{5}$$

Substituting (3) and (4) to (1), (2), and (5) yields

$$\tau_{P_i}\dot{\omega}_i + \omega_i - \omega^d + k_{P_i}\left(P_i - {P_i}^d\right) = 0 \tag{6}$$

$$\tau_{Q_i}k_{V_i}\ddot{V}_i + (\tau_{Q_i} + k_{V_i})\dot{V}_i + V_i - V^d + k_{Q_i}\left(Q_i - {Q_i}^d\right) = 0. \tag{7}$$

Equations (6) and (7) denote a simplified model of the ith DG.

B. Network Model

Before introducing the network model, some preliminary knowledge of graph theory [17] is briefly presented first for completeness.

1) Graph Theory: A graph is defined as $\mathcal{G} = (\mathcal{V}, \xi)$, where $\mathcal{V} = \{1, \ldots, N\}$ denotes the set of vertices and $\xi \subseteq \mathcal{V} \times \mathcal{V}$ is the set of edges between two distinct vertices. If, for all $(i, j) \subseteq \xi$, $(j, i) \subseteq \xi$, then we call $\mathcal{G}$ undirected. Otherwise, it is called a directed graph. In this paper, both the physical and the communication graph are modeled as a undirected connected graph. The set of neighbors of the ith vertex is denoted as $\mathcal{N}_i \triangleq \{j \subseteq \mathcal{V} : (i, j) \subseteq \xi\}$. The elements of the adjacency matrix $\mathbf{A}$ are defined as $a_{ij} = a_{ji} = 1$ if $j \subseteq \mathcal{N}_i$; otherwise, $a_{ij} = a_{ji} = 0$. The Laplacian matrix of $\mathcal{G}$ is defined as $\mathcal{L} = \mathbf{\Delta} - \mathbf{A}$, where $\mathbf{\Delta}$ is called an in-degree matrix and is defined as $\mathbf{\Delta} = \mathrm{diag}(\Delta_i) \subseteq \mathbb{R}^{N\times N}$ with $\Delta_i = \sum_{j\in\mathcal{N}_i} a_{ij}$. The incidence matrix $\mathbf{B}$ of the graph with M distinct edges is defined as $\mathbf{B} = [b_1 \ \cdots \ b_M]$, where $(b_l)_i = 1$ and $(b_l)_j = -1$, with other entries being 0 if edge l connects vertices i and j. Then, the weighted Laplacian matrix is defined as $\mathcal{L}_w = \mathbf{B}\mathcal{W}\mathbf{B}^T$, where $\mathcal{W} = \mathrm{diag}(w_1, \ldots, w_M)$ is the edge weight matrix.

2) Network Model: An MG distribution network is considered as a connected and complex-weighted graph $\mathcal{G} = (\mathcal{V}, \xi)$ with nodes $\mathcal{V}$ being the DGs (buses) and edges ξ being the line impedances. Consider a network with N DGs, and let Y_{ik} be the admittance between the ith and kth DGs, which is defined as $Y_{ik} = G_{ik} + jB_{ik} \in \mathbb{C}$, where $G_{ik} \in \mathbb{R}$ and $B_{ik} \in \mathbb{R}$ are the conductance and susceptance, respectively. If there is no connection between the ith and kth DGs, we define $Y_{ik} = 0$. The set of neighboring DGs of the ith DG is defined as $\mathcal{N}_i = \{k | k \in N, k \neq i, Y_{ik} \neq 0\}$. We also define $G_{ii} = \sum_{k\in\mathcal{N}_i} G_{ik}$ and $B_{ii} = \sum_{k\in\mathcal{N}_i} B_{ik}$. We assume that local loads are connected to each DG, i.e., $S_{L_i} = P_{L_i} + Q_{L_i}$. To incorporate various types of loads, the ZIP load model is applied here [18], which is expressed as

$$P_{L_i} = P_{1_i}{V_i}^2 + P_{2_i}V_i + P_{3_i} \tag{8}$$

$$Q_{L_i} = Q_{1_i}{V_i}^2 + Q_{2_i}V_i + Q_{3_i} \tag{9}$$

where P_{1_i}, Q_{1_i} are nominal constant impedance loads, P_{2_i}, Q_{2_i} are nominal constant current loads, and P_{3_i}, Q_{3_i} are nominal constant power loads.

Based on power balance relations [19], the injected real power $\hat{P}_i$ and reactive power $\hat{Q}_i$ are obtained as

$$\hat{P}_i = {V_i}^2 G_{ii} - \sum_{k\in\mathcal{N}_i} V_i V_k |Y_{ik}| \cos(\delta_i - \delta_k - \phi_{ik}) \tag{10}$$

$$\hat{Q}_i = -{V_i}^2 B_{ii} - \sum_{k\in\mathcal{N}_i} V_i V_k |Y_{ik}| \sin(\delta_i - \delta_k - \phi_{ik}) \tag{11}$$

where V_i and δ_i are the voltage magnitude and the phase angle of the ith DG, $|Y_{ik}|$ is the magnitude of the admittance Y_{ik}, i.e., $|Y_{ik}| = \sqrt{{G_{ik}}^2 + {B_{ik}}^2}$, and ϕ_{ik} is the admittance angle of Y_{ik}, i.e., $\phi_{ik} = \phi_{ki} = \arctan(B_{ik}/G_{ik})$. The real and reactive power outputs of the ith DG are given as

$$P_i = P_{L_i} + \hat{P}_i \tag{12}$$

$$Q_i = Q_{L_i} + \hat{Q}_i. \tag{13}$$

Combining (6)–(13), we can get the whole system dynamics.

In order to formulate the voltage and frequency restoration control proposed in the next section, we make the following assumption.

Assumption 1: The power transmission lines of the MG network are *lossless*, i.e., $G_{ik} = 0$, $Y_{ik} = jB_{ik}$, and $\phi_{ik} = \phi_{ki} = -(\pi/2)$, $\forall i \in N, k \in \mathcal{N}_i$.

Under Assumption 1, (12) and (13) can be reduced to

$$P_i = P_{L_i} + \sum_{k\in\mathcal{N}_i} V_i V_k |B_{ik}| \sin(\delta_i - \delta_k) \tag{14}$$

$$Q_i = Q_{L_i} + {V_i}^2 \sum_{k\in\mathcal{N}_i} |B_{ik}| - \sum_{k\in\mathcal{N}_i} V_i V_k |B_{ik}| \cos(\delta_i - \delta_k). \tag{15}$$

Remark 1: The assumption made earlier is common and reasonable in power system analysis. The purely inductive transmission lines can be achieved by making the inverter output admittance inductive and dominate over any resistive effects in the network. More detailed justification can be seen in [19] and [20].

Remark 2: Combining (6)–(15), we conclude that the voltage dynamic (7) and (15) and the frequency dynamic (6) and (14) affect each other. In order to design the voltage and frequency control separately, we first control the voltage to its reference value within finite time and then design the frequency restoration control law with constant voltage amplitudes, which will be introduced in the next section.

III. Distributed Secondary Controller Design

In this section, we first give some basic terminology of finite-time control [21]–[24], which will be used in the subsequent development. Then, we analyze some properties of the primary

Authorized licensed use limited to: Northeastern University. Downloaded on July 15,2025 at 08:09:13 UTC from IEEE Xplore. Restrictions apply.

control by studying the behaviors of the node states, including both voltage and frequency. Based on these, we propose our secondary control objectives and, at last, design a distributed secondary control law for the MG to achieve these objectives.

A. Finite-Time Control

The idea of finite-time stabilization is to steer system states to arrive at their equilibrium in finite time. Furthermore, finite-time stable closed-loop systems might have better robustness and disturbance rejection properties [21]. Due to the page limit, some basic concepts and definitions on finite-time stabilization, which can be found in [21]–[24], are omitted here. However, the following lemma is needed. For convenience, we denote $sig(x)^{\alpha} = sgn(x)|x|^{\alpha}$.

Lemma 1 [22]: For the following system

$$\begin{aligned} \dot{x} &= y \\ \dot{y} &= Mu \end{aligned} \tag{16}$$

with feedback control input

$$u = -k_1 sig(x)^{\alpha_1} - k_2 sig(y)^{\alpha_2} \tag{17}$$

where $x = [x_1 \ \cdots \ x_N]^T$, $y = [y_1 \ \cdots \ y_N]^T$, $k_1, k_2 > 0$, α_1 and α_2 are two positive constants satisfying $0 < \alpha_1 < 1$, $\alpha_2 = 2\alpha_1/(1+\alpha_1)$, $M \in \mathbb{R}^{N\times N}$ is a symmetric positive definite matrix, and $sig(\cdot)$ is defined elementwise, it is globally finite-time stable.

B. Control Objective

From related work in [16] and [25], we conclude that the frequency of the MG under the primary controller with the droop function will be synchronized. According to [26], the synchronized steady-state frequency is $\omega_{ss} = \omega^d + (\sum_{i=1}^{N}(P_i{}^d - P_i)/\sum_{i=1}^{N}(1/k_{P_i}))$. Clearly, this shows that, as long as the total nominal power output $\sum_{i=1}^{N} P_i^d$ is different from the total consumption real power $\sum_{i=1}^{N} P_i$, the synchronized frequency will deviate from the nominal frequency ω^d. As the frequency is a global state, the droop control function can share real power precisely with the inverse of the droop gain, i.e., $k_{P_i}(P_i - P_i{}^d) = k_{P_k}(P_k - P_k{}^d)$, $\forall i, k \in N$. Similarly, the voltage will deviate from its nominal value if the reactive power Q_i is different from its desired value Q_i^d. Thus, secondary control laws need to be designed for both frequency and voltage restorations.

In this paper, our control objectives for islanded MG are as follows.

1) Restore the network frequency and voltage to their respective reference values, i.e.,

$$\lim_{t\to\infty} \omega_i(t) = \omega^{ref}, \ \forall i \in N$$
$$\lim_{t\to T} V_i(t) = V^{ref}, V_i(t) = V^{ref}, \ \forall t > T, \ \forall i \in N$$

for some finite time T.

2) Guarantee real power sharing accuracy, i.e.,

$$\frac{P_i}{P_k} = \frac{m_i}{m_k}, \ \forall i, k \in N \tag{18}$$

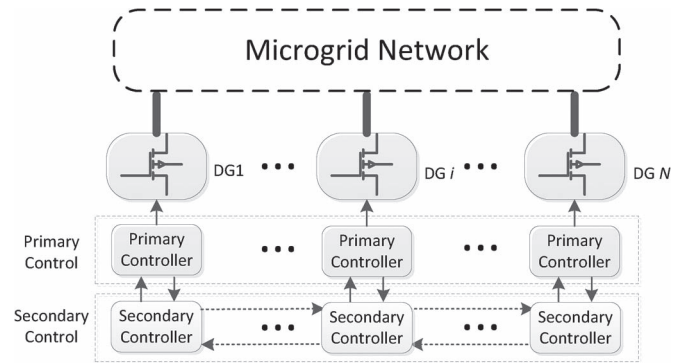

Fig. 3. Distributed secondary control diagram of an islanded MG.

where $m_i, m_k \in \mathbb{R}^+$ are the real power sharing gains and are chosen according to the power rating of the DGs [16]. Conventionally, in the primary control, the frequency droop gain k_{P_i} is usually chosen as the inverse proportion of the power rating. Hence, we also have (18) as

$$\frac{P_i}{P_k} = \frac{m_i}{m_k} = \frac{k_{P_k}}{k_{P_i}}, \ \forall i, k \in N. \tag{19}$$

C. Distributed Secondary Controller Design

A distributed control strategy is proposed in the secondary control layer, as shown in Fig. 3. Different from the MGCC control strategy, our secondary controller is applied locally with communication with its neighboring controllers. We add the secondary control inputs $\mathbf{u}_i = [u_i{}^{\omega} \ u_i{}^{V}]^T$ into the primary control model (6) and (7) in the following form:

$$\tau_{P_i}\dot{\omega}_i + \omega_i - \omega^d + k_{P_i}\left(P_i - P_i{}^d\right) + u_i{}^{\omega} = 0 \tag{20}$$

$$\tau_{Q_i}k_{V_i}\ddot{V}_i + (\tau_{Q_i} + k_{V_i})\dot{V}_i + V_i - V^d + k_{Q_i}\left(Q_i - Q_i{}^d\right) + u_i{}^{V} = 0 \tag{21}$$

where $u_i{}^{\omega}$ and $u_i{}^{V}$ are the secondary frequency and voltage control input, respectively.

1) Finite-Time Voltage Restoration: The voltage dynamic (21) can be rewritten as the following second-order nonlinear system:

$$\dot{x}_i = f_i(x_i, x_k) + g_i(x_i)u_i, i \in N, k \in \mathcal{N}_i \tag{22}$$

where $x_i = [V_i \ \dot{V}_i]^T$, $f_i(x_i, x_k) = [\dot{V}_i \ f_{1i}(x_i, x_k)]^T$, $g_i(x_i) = [0 \ 1/(\tau_{Q_i}k_{V_i})]^T$, and $u_i = u_i{}^{V}$, with

$$\begin{aligned} f_{1i}(x_i, x_k) = &-\frac{\tau_{Q_i} + k_{V_i}}{\tau_{Q_i}k_{V_i}}\dot{V}_i - \frac{k_{Q_i}\left(Q_{1i} + \sum_{k\in N_i}|B_{ik}|\right)}{\tau_{Q_i}k_{V_i}}V_i^2 \\ &+ \frac{k_{Q_i}}{\tau_{Q_i}k_{V_i}}\sum_{k\in N_i}|B_{ik}|V_iV_k\cos(\delta_i - \delta_k) \\ &- \frac{1 + k_{Q_i}Q_{2i}}{\tau_{Q_i}k_{V_i}}V_i - \frac{k_{Q_i}\left(Q_{3i} - Q_i^d\right) - V^d}{\tau_{Q_i}k_{V_i}}. \end{aligned}$$

Authorized licensed use limited to: Northeastern University. Downloaded on July 15,2025 at 08:09:13 UTC from IEEE Xplore. Restrictions apply.

Similar to [14], it is assumed that only one DG is access to the reference voltage value; hence, we define the voltage local neighborhood tracking error as

$$e_i{}^V = \sum_{k\in\mathcal{N}_{C_i}} (V_i - V_k) + g_i{}^V (V_i - V^{ref}) \tag{23}$$

$$e_i{}^{dV} = \sum_{k\in\mathcal{N}_{C_i}} (\dot{V}_i - \dot{V}_k) + g_i{}^V (\dot{V}_i - 0) \tag{24}$$

where $g_i{}^V$ is the voltage pinning gain, which is nonzero for the DG that has direct access to the reference voltage value V^{ref}. $\mathcal{N}_{C_i}$ indicates the communication neighborhood set of the ith controller.

We select

$$y = h_i(x_i) = V_i - V^{ref}. \tag{25}$$

Then, by using the following coordinate transformation [27]:

$$\begin{cases} z_{1_i} = h_i(x_i) = V_i - V^{ref} \\ z_{2_i} = L_{f_i} h_i(x_i) = \dot{V}_i \end{cases} \tag{26}$$

system (22) is rewritten as

$$\begin{cases} \dot{z}_{1_i} = z_{2_i} \\ \dot{z}_{2_i} = v_i \end{cases} \tag{27}$$

where

$$v_i = L_{f_i}^2 h_i(x_i) + L_{g_i} L_{f_i} h_i(x_i) u_i. \tag{28}$$

$L_f h(x)$ is the Lie derivative of $h(x)$ with respect to f, which is defined as $L_f h(x) = \nabla h(x) \cdot f$. Also, $L_f^2 h(x)$ is defined as $L_f^2 h(x) = L_f(L_f h(x))$. Note that, as both $h(x)$ and f_i are continuous and differentiable in their domain, hence, the Lie derivative $L_f h(x)$ and $L_f^2 h(x)$ always exist [28].

For the system (27), we can construct a distributed finite-time controller as

$$v_i = -k_1 sig\left(e_i{}^V\right)^{\alpha_1} - k_2 sig\left(e_i{}^{dV}\right)^{\alpha_2} \tag{29}$$

where $k_1, k_2 > 0$, $0 < \alpha_1 < 1$, and $\alpha_2 = 2\alpha_1/(1+\alpha_1)$.

From (26), (28), and (29), we can obtain a finite-time voltage controller for (22) as

$$u_i{}^V = u_i = -\frac{k_1 sig\left(e_i{}^V\right)^{\alpha_1} + k_2 sig\left(e_i{}^{dV}\right)^{\alpha_2} + L_{f_i}^2 h_i(x_i)}{L_{g_i} L_{f_i} h_i(x_i)} \tag{30}$$

where $L_{f_i}^2 h_i(x_i) = f_{1i}(x_i)$ and $L_{g_i} L_{f_i} h_i(x_i) = 1/(\tau_{Q_i} k_{V_i})$.

Theorem 1: The voltage dynamics system (21) with the distributed voltage control (30) is globally finite-time stable and can restore the voltages at all the DGs to the reference value in finite time.

Proof: The proof of this theorem is equivalent to showing that system (27) with the distributed control input (28) is globally finite-time stable. The overall system of (27) and (28) can be written as

$$\begin{cases} \dot{z}_1 = z_2 \\ \dot{z}_2 = -k_1 sig\big((\mathcal{L}_c + G^V) z_1\big)^{\alpha_1} - k_2 sig\big((\mathcal{L}_c + G^V) z_2\big)^{\alpha_2} \end{cases} \tag{31}$$

where $z_1 = [z_{1_1} \ \cdots \ z_{1_N}]^T$, $z_2 = [z_{2_1} \ \cdots \ z_{2_N}]^T$, $\mathcal{L}_c$ is the Laplacian matrix of the designed communication graph, and $G^V = \mathrm{diag}(g_1{}^V, g_2{}^V, \ldots, g_N{}^V)$.

Let $M = \mathcal{L}_c + G^V$, and clearly, it is a symmetric positive definite matrix [29]. Let $x = Mz_1$ and $y = Mz_2$; then, (31) becomes (16) with (17). According to Lemma 1, system (31) is globally finite-time stable, so Theorem 1 holds. ■

Remark 3: The proposed finite-time voltage controller (30) can steer the voltage amplitudes to their reference values within finite time T. This is achieved independent of the frequency variable which means that Theorem 1 is valid no matter what frequency control law is used. This enables the voltage and the frequency design to be separated.

2) Frequency Restoration: In order to restore the frequency to the nominal value while guaranteeing the real power sharing accuracy (19), from (19) and (20), we can easily conclude that there are constraints on the control inputs $u_i{}^\omega$, i.e.,

$$(u_i{}^\omega)_s \,/\, (u_k{}^\omega)_s = 1, \ \forall\, i, k \in N \tag{32}$$

where $(u_i^\omega)_s$ indicates the ith frequency control input value in the steady state. Thus, (32) requires that the control inputs in the steady state should be equal to each other.

In order to achieve the control objectives subject to input constraints in (32), a distributed proportional and integral method is proposed here. Motivated by the work in [31], the frequency control input is designed as

$$u_i{}^\omega = \alpha_i(\hat{\omega}_i - \omega_i) \tag{33}$$

$$\dot{\hat{\omega}}_i = \beta_i e_i{}^\omega + \gamma_i \left(\sum_{k\in\mathcal{N}_{C_i}} (u_k{}^\omega - u_i{}^\omega) \right) \tag{34}$$

$$e_i{}^\omega = \sum_{k\in\mathcal{N}_{C_i}} (\omega_i - \omega_k) + g_i{}^\omega (\omega_i - \omega^{ref}) \tag{35}$$

where $\alpha_i, \beta_i, \gamma_i \in \mathbb{R}^+$ are the proportional gains, e_i^ω is defined as the frequency local neighborhood tracking error, and g_i^ω is the frequency pinning gain, which is nonzero for the DG that has direct access to the reference frequency value ω^{ref}.

A block diagram of the proposed secondary controller is shown in Fig. 4. From (33)–(35) and Fig. 4, we can see that the secondary frequency control input u_i^ω contains two parts. The first one, *namely*, a local tracking error, is to make the steady-state frequency track the reference frequency, i.e., $\lim_{t\to\infty} \omega_i(t) = \omega^{ref}$, $\forall\, i \in N$. The second part is to ensure that the steady-state control input constraints in (32) are satisfied.

Note that some interesting results on the consensus of multiagent systems constrained by nonlinear transmissions have been established in [30]. In our case, it is sufficient to allow linear transmission because, in a practical MG communication system, the accuracy of data transmission can always be guaranteed by linear transmission. In the sense that the nonlinear function f_{ij} in [30] is set to be $f_{ij}(x) = x$, our designed consensus protocol (33)–(35) is consistent with that in [30].

We now analyze the proposed distributed frequency restoration controller (33)–(35) and establish a sufficient condition for system stability. For the resulting closed-loop system,

Authorized licensed use limited to: Northeastern University. Downloaded on July 15,2025 at 08:09:13 UTC from IEEE Xplore. Restrictions apply.

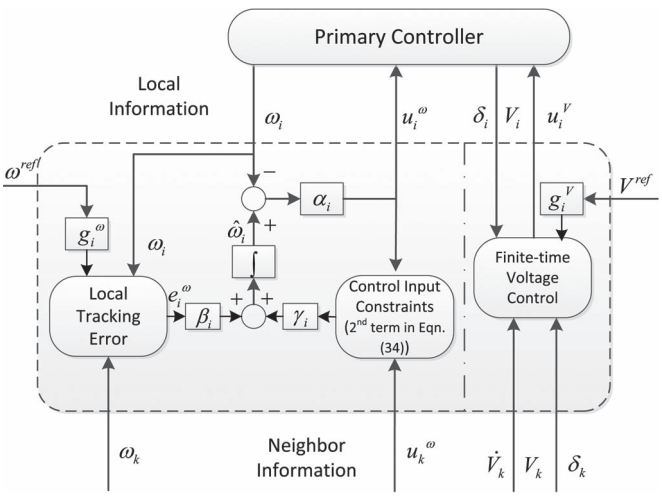

Fig. 4. Diagram of the proposed secondary controller.

finite-time escape will not occur. Therefore, in the time duration $[t_0\ t_0+T]$, no signal of the frequency control system will go to infinity. Thus, we only need to check the stability of the proposed frequency control after $t > t_0 + T$.

Note that, without loss of generality, here, we set $P_i^d = 0$, which will not affect the stability analysis.

The proposed distributed secondary controller (33)–(35) of the whole MG system can be written in the following compact form:

$$U^\omega = \alpha(\hat{\omega} - \omega) \tag{36}$$

$$\dot{\hat{\omega}} = \beta e^\omega - \gamma \mathcal{L}_c U^\omega \tag{37}$$

$$e^\omega = (\mathcal{L}_c + G^\omega)(\omega - \omega^{ref}\mathbf{1}_{N\times 1}) \tag{38}$$

where $U^\omega = [u_1{}^\omega\ u_2{}^\omega\ \cdots\ u_N{}^\omega]^T$, $\alpha = \mathrm{diag}(\alpha_1, \alpha_2, \ldots, \alpha_N)$, $\hat{\omega} = [\hat{\omega}_1\ \ \hat{\omega}_2\ \ \cdots\ \ \hat{\omega}_N]^T$, $\omega = [\omega_1\ \ \omega_2\ \ \cdots\ \ \omega_N]^T$, $\beta = \mathrm{diag}(\beta_1, \beta_2, \cdots \beta_N)$, $e^\omega = [e_1{}^\omega\ e_2{}^\omega\ \cdots\ e_N{}^\omega]^T$, $\gamma = \mathrm{diag}(\gamma_1, \gamma_2, \ldots, \gamma_N)$, $G^\omega = \mathrm{diag}(g_1{}^\omega, g_2{}^\omega, \ldots, g_N{}^\omega)$, $\mathcal{L}_c$ is the Laplacian matrix of the communication graph, and $\mathbf{1}_{\mathbf{N}\times 1}$ denotes the N-dimension vector with the elements all equal to 1.

Similarly, a compact form of (20) is as follows:

$$\tau_P{}^{-1}\dot{\omega} = -\omega + \omega^d\mathbf{1}_{N\times 1} - K_P P(\delta) - U^\omega \tag{39}$$

where $\tau_P = \mathrm{diag}(\tau_{P_1}^{-1}, \tau_{P_2}^{-1}, \ldots, \tau_{P_N}^{-1})$, $K_P = \mathrm{diag}(K_{P_1}, K_{P_2}, \ldots, K_{P_N})$, and $P(\delta) = \mathrm{diag}(P_1(\delta), P_2(\delta), \ldots, P_N(\delta))$ with V_i being replaced by their reference value V^{ref}.

Combining (36)–(39), we can obtain the state-space equation as

$$\begin{cases} \dot{\hat{\omega}} = (\beta W + \gamma\mathcal{L}_c\alpha)\omega - \gamma\mathcal{L}_c\alpha\hat{\omega} - \beta W\omega^{ref}\mathbf{1}_{N\times 1} \\ \dot{\delta} = \omega \\ \dot{\omega} = \tau_P(\alpha - I_N)\omega - \tau_P\alpha\hat{\omega} - \tau_P K_P P(\delta) + \tau_P\omega^d\mathbf{1}_{N\times 1} \end{cases} \tag{40}$$

where $W = \mathcal{L}_c + G^\omega$.

Theorem 2: Consider the closed-loop frequency control system (40). The proposed distributed controller (33)–(35) ensures the following: i) system (40) is locally exponentially stable;ii) the frequency converges to its reference value, i.e., $\lim_{t\to\infty}\omega_i(t) = \omega^{ref}$, $\forall i \in N$, while the input constraints in (32) are satisfied; and iii) the power sharing accuracy in (19) is guaranteed if matrix A has exactly one zero eigenvalue and all its other eigenvalues are in the open left half complex plane, where

$$A = \begin{bmatrix} -\gamma\mathcal{L}_c\alpha & \mathbf{0}_{N\times N} & \gamma\mathcal{L}_c\alpha + \beta W \\ \mathbf{0}_{N\times N} & \mathbf{0}_{N\times N} & I_N \\ -\tau_P\alpha & -\tau_P K_p\mathcal{L}_w & \tau_P(\alpha - I_N) \end{bmatrix} \tag{41}$$

with $\mathcal{L}_w$ being a weighted Laplacian matrix which is defined as $\mathcal{L}_w = \mathbf{B}\mathrm{diag}(V^{ref}V^{ref}|B_{ik}|\cos(\delta_i^\star - \delta_j^\star))\mathbf{B}^T$, where $\mathbf{B}$ is the incidence matrix of the communication graph and $\delta_i^\star$ is the voltage angle of the ith DG at the equilibrium point.

Proof: Define the frequency error as $\tilde{\omega} = \omega - \omega^{ref}\mathbf{1}_{N\times 1}$; then, $\tilde{\delta}(t) = \delta(0) + \int_0^t \tilde{\omega}(\tau)d\tau$. Note that the dynamics (40) is not dependent on the value of the angles δ_i but only on their differences $\delta_i - \delta_j$. Thus, we can arbitrarily choose one node, for example, node N, as a reference node and express $\tilde{\delta}_i$, $i = 1, 2, \ldots, N-1$, relative to $\tilde{\delta}_N$ via the state transformation

$$\theta = \mathcal{R}\tilde{\delta}, \quad \mathcal{R} = \begin{bmatrix} I_{N-1} & -\mathbf{1}_{(N-1)\times 1} \end{bmatrix} \tag{42}$$

where $\theta = [\theta_1\ \theta_2\ \cdots\ \theta_{N-1}]^T$ is an $(N-1)\times 1$ vector. Then, we can express the system in a new coordinate as

$$\begin{cases} \dot{\hat{\omega}} = (\beta W + \gamma\mathcal{L}_c\alpha)\tilde{\omega} - \gamma\mathcal{L}_c\alpha\hat{\omega} + \gamma\mathcal{L}_c\alpha\omega^{ref}\mathbf{1}_{N\times 1} \\ \dot{\theta} = \mathcal{R}\tilde{\omega} \\ \dot{\tilde{\omega}} = \tau_P(\alpha - I_N)\tilde{\omega} - \tau_P\alpha\hat{\omega} - \tau_P K_P P(\theta) \\ \quad + \tau_P\left(\omega^d + (\alpha - I_N)\omega^{ref}\right)\mathbf{1}_{N\times 1}. \end{cases} \tag{43}$$

Let $(\hat{\omega}^\star, \theta^\star, \tilde{\omega}^\star)$ be the equilibrium of (43), which satisfies

$$\begin{cases} (\beta W + \gamma\mathcal{L}_c\alpha)\tilde{\omega}^\star - \gamma\mathcal{L}_c\alpha\hat{\omega}^\star + \gamma\mathcal{L}_c\alpha\omega^{ref}\mathbf{1}_{N\times 1} = \mathbf{0}_{N\times 1} \\ \mathcal{R}\tilde{\omega}^\star = \mathbf{0}_{(N-1)\times 1} \\ \tau_P(\alpha - I_N)\tilde{\omega}^\star - \tau_P\alpha\hat{\omega}^\star - \tau_P K_P P(\theta^\star) \\ \quad + \tau_P\left(\omega^d + (\alpha - I_N)\omega^{ref}\right)\mathbf{1}_{N\times 1} = \mathbf{0}_{N\times 1}. \end{cases} \tag{44}$$

The second equation in (44) implies that $\tilde{\omega}^\star = c\mathbf{1}_{N\times 1}$, where c is an arbitrary number. Then, the first equation in (44) becomes $c(\beta W + \gamma\mathcal{L}_c\alpha)\mathbf{1}_{N\times 1} = \gamma\mathcal{L}_c\alpha(\hat{\omega}^\star - \omega^{ref}\mathbf{1}_{N\times 1})$. Since $\mathbf{1}_{N\times 1}$ does not lie in the range of $\mathcal{L}_c$, thus, $c = 0$, and then, $\tilde{\omega}^\star = \mathbf{0}_{N\times 1}$, which implies that $\omega^\star = \omega^{ref}\mathbf{1}_{N\times 1}$. This means that $\lim_{t\to\infty}\omega_i(t) = \omega^{ref}$, $\forall i \in N$. Furthermore, we have $\gamma\mathcal{L}_c\alpha(\hat{\omega}^\star - \omega^{ref}\mathbf{1}_{N\times 1}) = \gamma\mathcal{L}_c\alpha(\hat{\omega}^\star - \omega^\star) = \mathbf{0}_{N\times 1}$. Note that $U^{\omega\star} = \alpha(\hat{\omega}^\star - \omega^\star)$; then, $\gamma\mathcal{L}_c U^{\omega\star} = \mathbf{0}_{N\times 1}$, which means that $\lim_{t\to\infty}(u_k{}^\omega - u_i{}^\omega) = 0, \forall i, k \in N$. This satisfies the input constraints (32) and also implies the accurate real power sharing (19). Referring to [16, Theorem 2], (44) is solvable and has a unique solution $(\hat{\omega}^\star, \theta^\star, 0)$ if and only if $\max_{i,k}|\theta_i - \theta_k| < (\pi/2)$, $\forall i \in N, k \in \mathcal{N}_i$, which is typically satisfied in real applications as pointed out in [16]. Thus, ii) and iii) are proved.

We now show that (40) is locally exponentially stable. Similar to [16], by linearizing (40) around the equilibrium $(\hat{\omega}^\star, \delta^\star, \omega^{ref})$, we obtain

$$\begin{bmatrix} \Delta\dot{\hat{\omega}} \\ \Delta\dot{\delta} \\ \Delta\dot{\omega} \end{bmatrix} = A \begin{bmatrix} \Delta\hat{\omega} \\ \Delta\delta \\ \Delta\omega \end{bmatrix} \tag{45}$$

Authorized licensed use limited to: Northeastern University. Downloaded on July 15,2025 at 08:09:13 UTC from IEEE Xplore. Restrictions apply.

where A is given in (41), $\Delta\hat{\omega} = \hat{\omega} - \hat{\omega}^\star$, $\Delta\delta = \delta - \delta^\star$, and $\Delta\omega = \omega - \omega^\star$.

By calculation, we obtain that $A\mathbf{e}_1 = 0$, where $\mathbf{e}_1 = [\mathbf{0}_{1\times N}\ 1_{1\times N}\ \mathbf{0}_{1\times N}]^T$ is an eigenvector of A corresponding to the eigenvalue 0, which indicates that A has at least one eigenvalue equal to 0. Next, we will show that it has exactly one zero eigenvalue. Considering the linear state transformation (42), we obtain

$$\begin{bmatrix} \Delta\dot{\hat{\omega}} \\ \Delta\dot{\theta} \\ \Delta\dot{\omega} \end{bmatrix} = A' \begin{bmatrix} \Delta\hat{\omega} \\ \Delta\theta \\ \Delta\omega \end{bmatrix} \tag{46}$$

where

$$A' = \begin{bmatrix} -\gamma\mathcal{L}_c\alpha & \mathbf{0}_{N\times(N-1)} & \gamma\mathcal{L}_c\alpha + \beta W \\ \mathbf{0}_{(N-1)\times N} & \mathbf{0}_{(N-1)\times(N-1)} & \mathcal{R} \\ -\tau_P\alpha & -\tau_P K_p \mathcal{L}'_w & \tau_P(\alpha - I_N) \end{bmatrix}$$

with $\mathcal{L}'_w \in \mathbb{R}^{N\times(N-1)}$ being the weighted Laplacian matrix after state transformation, and $\Delta\theta = \theta - \theta^\star$.

Now, we show that A' is a full-rank matrix. Considering

$$A' \begin{bmatrix} \Delta\hat{\omega} \\ \Delta\theta \\ \Delta\omega \end{bmatrix} = \mathbf{0}_{(3N-1)\times 1} \tag{47}$$

we have

$$\begin{cases} -\gamma\mathcal{L}_c\alpha\Delta\hat{\omega} + (\gamma\mathcal{L}_c\alpha + \beta W)\Delta\omega = \mathbf{0}_{N\times 1} \\ \mathcal{R}\Delta\omega = \mathbf{0}_{(N-1)\times 1} \\ -\tau_P\alpha\Delta\hat{\omega} - \tau_P K_p\mathcal{L}'_w\Delta\theta + \tau_P(\alpha - I_N)\Delta\omega = \mathbf{0}_{N\times 1}. \end{cases} \tag{48}$$

The second equation in (48) implies that $\Delta\omega = k\mathbf{1}_{N\times 1}$, where k is an arbitrary number. Then, the first equation in (48) becomes $\gamma\mathcal{L}_c\alpha\Delta\hat{\omega} = k(\gamma\mathcal{L}_c\alpha + \beta W)\mathbf{1}_{N\times 1}$. Since $\mathbf{1}_{N\times 1}$ does not lie in the range of $\mathcal{L}_c$, thus, $k = 0$, and then, $\Delta\hat{\omega} = \Delta\omega = \mathbf{0}_{N\times 1}$. Finally, considering the third equation in (48), we have $\tau_P K_p \mathcal{L}'_w \Delta\theta = \mathbf{0}_{N\times 1}$. As $\text{rank}(\mathcal{L}'_w) = N - 1$, this implies that $\Delta\theta = \mathbf{0}_{(N-1)\times 1}$. As $[\Delta\hat{\omega}\ \Delta\theta\ \Delta\omega]^T = \mathbf{0}_{(3N-1)\times 1}$ is the only solution of (46), thus, we conclude that A' is of full rank. Since the linear transform does not change the eigenvalues, hence, A and A' have the same eigenvalues, except that A has an extra zero eigenvalue. This indicates that A' is Hurwitz if and only if A has exactly one zero eigenvalue and all other eigenvalues are in the open left half complex plane. Thus the closed-loop system (40) is locally exponentially stable [32]. This completes the proof of Theorem 2. ■

IV. Simulation Results

In order to test the designed secondary controller, a 220-V (per phase rms) 50-Hz islanded MG shown in Fig. 5 is considered as the test system. The simulation is conducted in MATLAB/Simulink environment. This islanded MG consists of four DGs, four respective local loads, and three transmission lines. The parameters of the whole test system are summarized in Tables I and II. To facilitate the illustration, in this example, we choose the same communication graph as the physical connection graph. The communication graph for the distributed secondary controllers is also shown in Fig. 5. The reference voltage and frequency values are only known to DG1, i.e., ${g_1}^V = {g_1}^\omega = 1$ and ${g_k}^V = {g_k}^\omega = 0$, $k = 2, 3, 4$. All the parameters satisfy the conditions in Theorems 1 and 2.

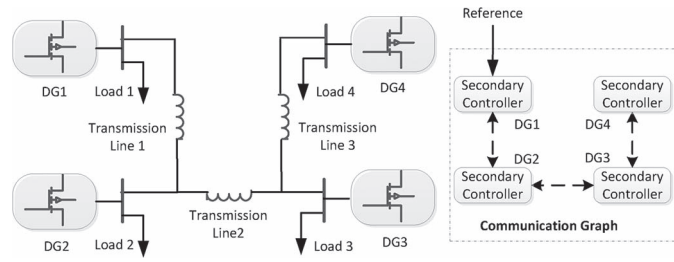

Fig. 5. Simulation test system.

TABLE I
PARAMETERS OF PRIMARY CONTROLLER AND MG SYSTEMS

	DG1		DG2		DG3		DG4	
Model	τ_{P_1}	0.016	τ_{P_2}	0.016	τ_{P_3}	0.016	τ_{P_4}	0.016
	τ_{Q_1}	0.016	τ_{Q_2}	0.016	τ_{Q_3}	0.016	τ_{Q_4}	0.016
	k_{P_1}	6e-5	k_{P_2}	3e-5	k_{P_3}	2e-5	k_{P_4}	1.5e-5
	k_{Q_1}	4.2e-4	k_{Q_2}	4.2e-4	k_{Q_3}	4.2e-4	k_{Q_4}	4.2e-4
	k_{V_1}	1e-2	k_{V_2}	1e-2	k_{V_3}	1e-2	k_{V_4}	1e-2
Load	P_{1_1}	0.01	P_{1_2}	0.01	P_{1_3}	0.01	P_{1_4}	0.01
	P_{2_1}	1	P_{2_2}	2	P_{2_3}	3	P_{2_4}	4
	P_{3_1}	1e4	P_{3_2}	1e4	P_{3_3}	1e4	P_{3_4}	1e4
	Q_{1_1}	0.01	Q_{1_2}	0.01	Q_{1_3}	0.01	Q_{1_4}	0.01
	Q_{2_1}	1	Q_{2_2}	2	Q_{2_3}	3	Q_{2_4}	4
	Q_{3_1}	1e4	Q_{3_2}	1e4	Q_{3_3}	1e4	Q_{3_4}	1e4
Line	B_{12}=10Ω^{-1}, B_{23}=10.67Ω^{-1}, B_{34}=9.82Ω^{-1}							

TABLE II
PARAMETERS OF SECONDARY CONTROLLER

	DG1		DG2		DG3		DG4	
Frequency Controller	α_1	0.2	α_2	0.2	α_3	0.2	α_4	0.2
	β_1	250	β_2	250	β_3	250	β_4	250
	γ_1	500	γ_2	500	γ_3	500	γ_4	500
Voltage Controller	k_1	100	k_1	100	k_1	100	k_1	100
	k_2	10	k_2	10	k_2	10	k_2	10
	α_1	$\frac{1}{3}$	α_1	$\frac{1}{3}$	α_1	$\frac{1}{3}$	α_1	$\frac{1}{3}$
	α_2	$\frac{1}{2}$	α_2	$\frac{1}{2}$	α_2	$\frac{1}{2}$	α_2	$\frac{1}{2}$
Reference	$V^{ref} = 310V$, ω^{ref} =50Hz							

The primary control is on operation from $t = 0$ s while the secondary control is activated at $t = 5$ s. This simulation can be divided into four stages.

Stage 1 (0–5 s): Only primary control is activated at $t = 0$ s.
Stage 2 (5 s–): Secondary control is on operation from $t = 5$ s.
Stage 3 (10–30 s): Constant load $L_c = 1 \times 10^4 + j1 \times 10^4 W$ is added to Load 4.
Stage 4 (30–40 s): Load L_c is removed from Load 4.

The simulation results are shown in Figs. 6–9. As seen from Figs. 6 and 8, during stage 1, due to the droop function in the primary control, the voltage amplitudes of four DGs fall down to different values while the frequency can synchronize to a common value (49.72 Hz). Unfortunately, both voltage and frequency deviate from their reference values; hence, they need to be restored in the secondary control layer. When our distributed secondary control is activated at $t = 5$ s, both voltage and frequency can quickly restore to their reference values,

Authorized licensed use limited to: Northeastern University. Downloaded on July 15,2025 at 08:09:13 UTC from IEEE Xplore. Restrictions apply.

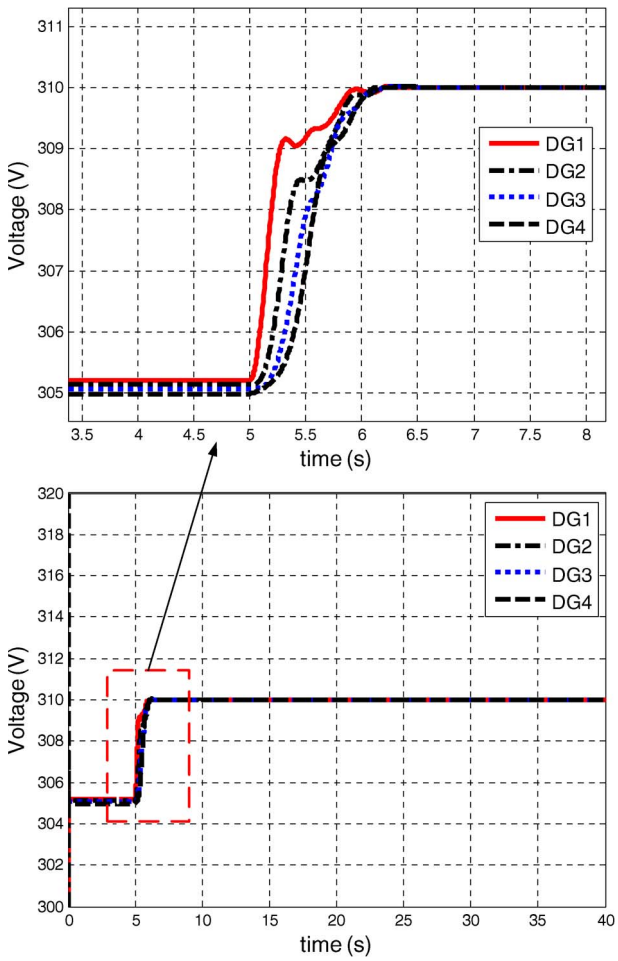

Fig. 6. Voltage output of the test islanded MG.

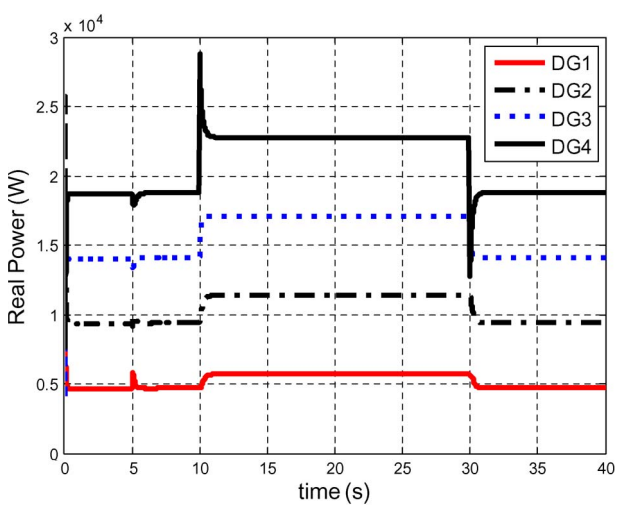

Fig. 7. Real power output of the test islanded MG.

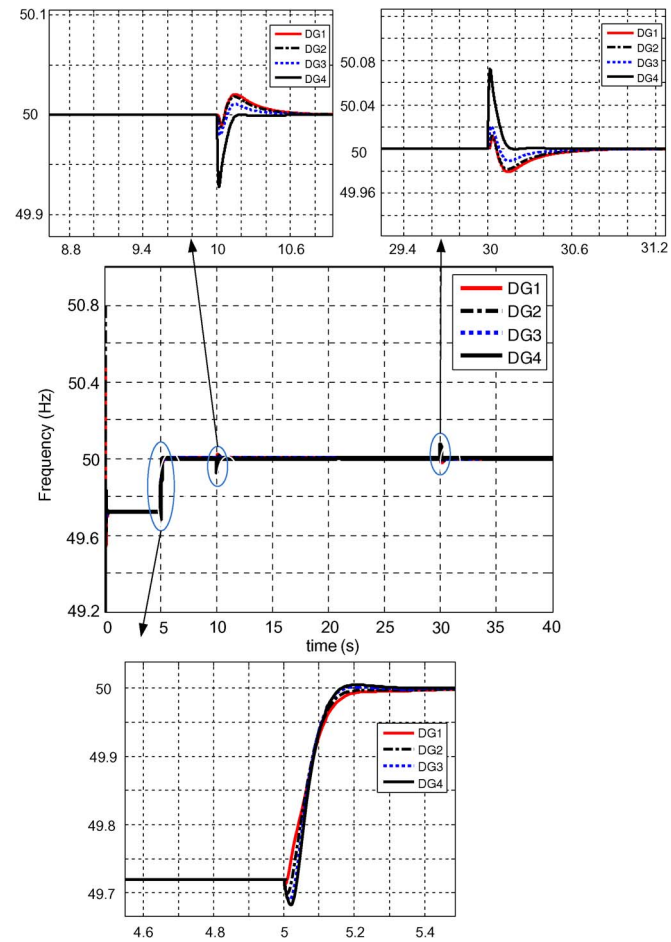

Fig. 8. Frequency output of the test islanded MG.

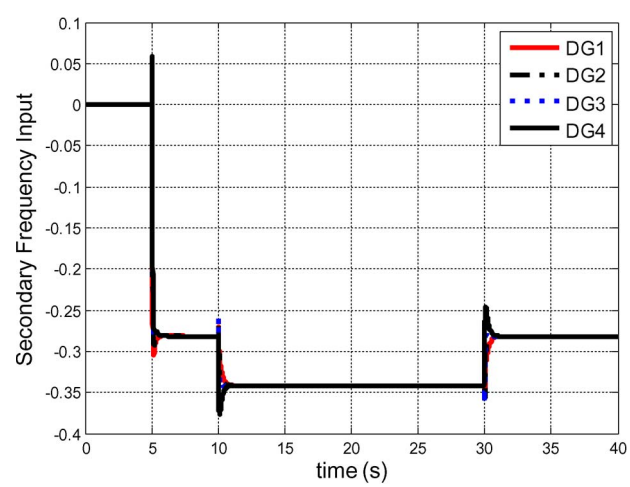

Fig. 9. Secondary frequency control input of the test islanded MG.

respectively ($V^{ref} = 310$ V and $\omega^{ref} = 50$ Hz). The steady-state frequencies of the four DGs remain at 50 Hz no matter if new constant load L_c is connected to or disconnected from DG4, even though there are transient deviations. This result shows that the designed distributed secondary controller can eliminate the voltage and frequency deviation caused by the primary control.

The real power outputs of these tested four DGs are shown in Fig. 7. Before the secondary control is activated (Stage 1), the real power sharing is well achieved by the primary control, i.e., $P_1 : P_2 : P_3 : P_4 = 1/k_{P_1} : 1/k_{P_2} : 1/k_{P_3} : 1/k_{P_4} = 1 : 2 : 3 : 4$. When the secondary control is activated (from 5 s), real power is still well shared according to the designed droop gains, regardless of the load increasing at stage 3 or decreasing

Authorized licensed use limited to: Northeastern University. Downloaded on July 15,2025 at 08:09:13 UTC from IEEE Xplore. Restrictions apply.

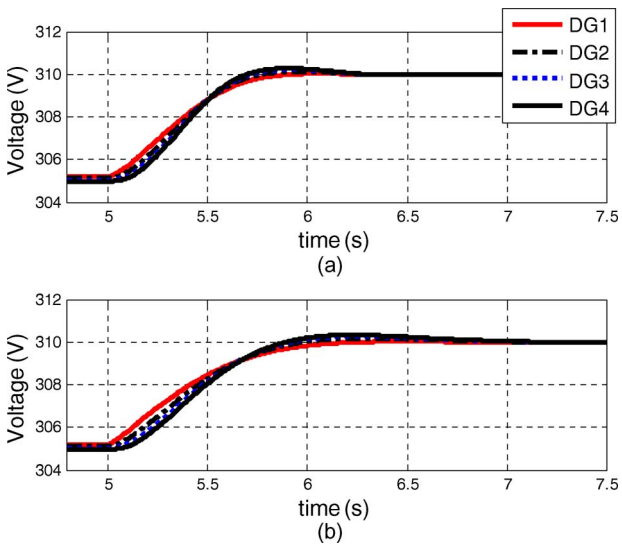

Fig. 10. Comparison between the proposed method and the approach in [14].

at stage 4. The secondary frequency control inputs are shown in Fig. 9. Clearly, these simulation results validate that secondary frequency control inputs are equal to each other in the steady state, i.e., $(u_1{}^{\omega})_s = (u_2{}^{\omega})_s = (u_3{}^{\omega})_s = (u_4{}^{\omega})_s$.

As mentioned in the introduction, there are limited approaches to solve voltage and frequency restoration problems in a distributed way. As far as we know, relevant results are only available in [13]–[16]. Among these approaches, only [13] and [14] consider similar problems to that of this paper. However, in [14], frequency restoration is not considered. Therefore, here, we just make a comparison with the method proposed in [14] in voltage restoration by also applying it to the aforementioned MG system. The control gains are set as $k_1 = 100$ and $k_2 = 40$ in both our proposed method and the controller in [14]. The simulation results of Stage 2 for the period [4.8, 7.5] are shown in Fig. 10. It is clear from Fig. 10 that our proposed method has a settling time of about 1.5 s, while the method in [14] requires 2.5 s for the responses to settle down, which is about 166% of our settling time. This actually makes sense as our scheme ensures the convergence within finite time.

V. Conclusion

The problem of voltage and frequency restoration in islanded MG systems is considered in this paper. A distributed secondary control scheme is proposed to solve this problem. Compared to the existing centralized control approach, our method is fully distributed. In order to design and analyze the voltage and frequency secondary restoration control separately, we first apply the distributed finite-time approach to design the voltage controller, which enables the voltage regulation within finite time. Then, the frequency restoration is addressed while keeping the real power sharing accuracy. A sufficient local stability condition for the proposed controller is given. Simulation results show that the proposed controller can restore the voltage and frequency of the whole system to their reference values while keeping a good real power sharing accuracy, no matter if additional load is connected to or disconnected from the system.

References

[1] F. Blaabjerg, R. Teodorescu, M. Liserre, and A. V. Timbus, "Overview of control and grid synchronization for distributed power generation systems," *IEEE Trans. Ind. Electron.*, vol. 53, no. 5, pp. 1398–1405, Oct. 2006.

[2] Q. Shafiee *et al.*, "Robust networked control scheme for distributed secondary control of islanded microgrids," *IEEE Trans. Ind. Electron.*, vol. 61, no. 10, pp. 5363–5374, Oct. 2014.

[3] W. Yu, G. Wen, X. Yu, Z. Wu, and J. Lu, "Bridging the gap between complex networks and smart grids," *J. Control Decision*, vol. 1, no. 1, pp. 102–114, 2014.

[4] F. Guo and C. Wen, "Distributed control subjected to constraints on control inputs: A case study on secondary control of droop-controlled inverter-based microgrids," in *Proc. 9th IEEE Conf. Ind. Electron. Appl.*, Hangzhou, China, 2014, pp. 1119–1124.

[5] X. Yu, C. Cecati, T. Dillon, and M. Simoes, "The new frontier of smart grids: An industrial electronics perspective," *IEEE Ind. Electron. Mag.*, vol. 5, no. 3, pp. 49–63, Sep. 2011.

[6] J. Balaguer, Q. Lei, S. Yang, and U. Supatti, "Control for grid-connected and intentional islanding operations of distributed power generation," *IEEE Trans. Ind. Electron.*, vol. 58, no. 1, pp. 147–157, Jan. 2011.

[7] J. A. P. Lopes, C. L. Moreria, and A. G. Madureira, "Defining control strategies for microgrids islanded operation," *IEEE Trans. Power Syst.*, vol. 21, no. 2, pp. 916–924, May 2006.

[8] S. Chakraborty, M. D. Weiss, and M. G. Simoes, "Distributed intelligent energy management system for a single-phase high-frequency ac microgrid," *IEEE Trans. Ind. Electron.*, vol. 54, no. 1, pp. 97–109, Feb. 2007.

[9] J. M. Guerrero, J. C. Vasquez, J. Matas, and L. G. de Vicuna, "Hierarchical control of droop-controlled ac and dc microgrids—A general approach toward standardization," *IEEE Trans. Ind. Electron.*, vol. 58, no. 1, pp. 158–172, Jan. 2011.

[10] J. M. Guerrero, M. Chandorkar, T. Lee, and P. C. Loh, "Advanced control architectures for intelligent microgrids-Part I: Decentralized and hierarchical control," *IEEE Trans. Ind. Electron.*, vol. 60, no. 4, pp. 1254–1262, Apr. 2013.

[11] N. Pogaku, M. Prodanovic, and T. C. Green, "Modeling, analysis and testing of autonomous operation of an inverter-based microgrid," *IEEE Trans. Power Electron.*, vol. 22, no. 2, pp. 613–625, Mar. 2003.

[12] A. S. Dobakhshari, S. Azizi, and A. M. Ranjbar, "Control of microgrids: Aspects and prospects," in *Proc. Int. Conf. Netw., Sens. Control*, Apr. 2011, pp. 38–43.

[13] A. Bidram, A. Davoudi, F. K. Lewis, and Z. Qu, "Secondary control of microgrids based on distributed cooperative control of multi-agent systems," *IET Generation Transmiss. Distrib.*, vol. 7, no. 8, pp. 822–831, Aug. 2013.

[14] A. Bidram, A. Davoudi, F. K. Lewis, and J. M. Guerrero, "Distributed cooperative secondary control of microgrids using feedback linearization," *IEEE Trans. Power Syst.*, vol. 28, no. 3, pp. 3462–3470, Aug. 2013.

[15] Q. Shafiee, J. M. Guerrero, and J. C. Vasquez, "Distributed secondary control for islanded microgrids—A novel approach," *IEEE Trans. Power Electron.*, vol. 29, no. 2, pp. 1018–1031, Feb. 2014.

[16] J. W. Simpson-Porco, F. Dorfler, and F. Bullo, "Sychronization and power sharing for droop-controlled inverters in islanded microgrids," *Automatica*, vol. 49, no. 9, pp. 2603–2611, Sep. 2013.

[17] C. Godsil and G. Royle, *Algebraic Graph Theory*. New York, NY, USA: Springer-Verlag, 2001.

[18] K. Hatipoglu, I. Fidan, and G. Radman, "Investigating effect of voltage changes on static ZIP load model in a microgrid environment," in *Proc. NAPS*, Sep. 2012, pp. 1–5.

[19] A. R. Bergen and V. Vittal, *Power System Analysis*. Englewood Cliffs, NJ, USA: Prentice-Hall, 1986.

[20] J. Schiffer, O. Romeo, A. Astolfi, J. Raisch, and T. Sezi, "Conditions for stability of droop-controlled inverter-based microgrids," *Automatica*, vol. 50, no. 10, pp. 2457–2469, Oct. 2014.

[21] Y. Wang, D. Cheng, Y. Hong, and H. Qin, "Finite-time stabilizing excitation control of a synchronous generator," *Int. J. Syst. Sci.*, vol. 33, no. 1, pp. 13–22, 2002.

[22] Y. Hong, J. Huang, and Y. Xu, "On an output feedback finite-time stabilization problem," *IEEE Trans. Autom. Control*, vol. 46, no. 2, pp. 305–309, Feb. 2001.

[23] M. Rosier, "Homogeneous Lyapunov function for homogeneous continuous vector filed," *Syst. Control Lett.*, vol. 19, no. 6, pp. 467–473, Dec. 1992.

[24] S. Bhat and D. Bernstein, "Continuous finite-time stabilization of the translational and rotational double integrators," *IEEE Trans. Autom. Control*, vol. 43, no. 5, pp. 678–682, May 1998.

Authorized licensed use limited to: Northeastern University. Downloaded on July 15,2025 at 08:09:13 UTC from IEEE Xplore. Restrictions apply.

[25] Z. Wang, M. Xia, and M. Lemmon, "Voltage stability of weak power distribution networks with inverter connected sources," in *Proc. Amer. Control Conf.*, Washington, DC, USA, 2013, pp. 6577–6582.
[26] H. Bouattour, *Distributed Secondary Control in Microgrids*. Stuttgart, Germany: Univ. Stuttgart, 2013.
[27] D. Cheng, T. J. Tarn, and A. Isidori, "Global external linearization of nonlinear systems via feedback," *IEEE Trans. Autom. Control*, vol. 30, no. 8, pp. 808–811, Aug. 1985.
[28] J. Slotine and W. Li, *Applied Nonlinear Control*. Upper Saddle River, NJ, USA: Prentice-Hall, 2009.
[29] J. Hu and Y. Hong, "Leader-following coordination of multi-agent systems with coupling time delays," *Phys. A, Statist. Mech. Appl.*, vol. 374, no. 2, pp. 853–863, Feb. 2007.
[30] Y. Chen, J. Lu, and Z. Lin, "Consensus of discrete-time multi-agent systems with transmission nonlinearity," *Automatica*, vol. 49, no. 6, pp. 1768–1775, Jun. 2013.
[31] M. Andreasson, D. V. Dimarogonas, H. Sandberg, and K. H. Johansson, "Distributed control of networked dynamical systems: Static feedback, integral action and consensus," *IEEE Trans. Autom. Control*, vol. 59, no. 7, pp. 1750–1765, Jul. 2014.
[32] C. T. Chen, *Linear System Theory and Design*, 3rd ed. London, U.K.: Oxford Univ. Press, 1999.

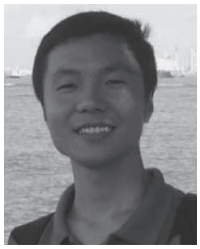

Fanghong Guo received the B.Eng. degree in automation science from Southeast University, Nanjing, China, in 2010 and the M.Eng. degree in automation science and electrical engineering from Beihang University, Beijing, China, in 2013. He is currently working toward the Ph.D. degree in the Energy Research Institute, Interdisciplinary Graduate School, Nanyang Technological University, Singapore.

His research interests include distributed cooperative control, microgrid systems, distributed optimization, and smart grid.

Changyun Wen (F'10) received the B.Eng. degree from Xi'an Jiaotong University, Xi'an, China, in 1983 and the Ph.D. degree from the University of Newcastle, Newcastle, Australia, in 1990.

From August 1989 to August 1991, he was a Postdoctoral Fellow at the University of Adelaide, Adelaide, Australia. Since August 1991, he has been with the School of Electrical and Electronic Engineering, Nanyang Technological University, Singapore, where he is currently a Full Professor. His main research activities are control systems and applications.

Dr. Wen is an Associate Editor of a number of journals, including *Automatica*, IEEE TRANSACTIONS ON INDUSTRIAL ELECTRONICS, and *IEEE Control Systems Magazine*. He is the Executive Editor-in-Chief of the *Journal of Control and Decision*. He served the IEEE TRANSACTIONS ON AUTOMATIC CONTROL as an Associate Editor from January 2000 to December 2002. He was a member of the IEEE Fellows Committee from 2011 to 2013 and a Distinguished Lecturer of the IEEE Control Systems Society from February 2010 to February 2013.

Jianfeng Mao (M'04) received the B.E. and M.E. degrees in automation science from Tsinghua University, Beijing, China, in 2001 and 2004, respectively, and the Ph.D. degree in systems engineering from Boston University, Boston, MA, USA, in 2009.

He is currently an Assistant Professor with the Division of Systems and Engineering Management, School of Mechanical and Aerospace Engineering, Nanyang Technological University, Singapore. His research is primarily focused on the modeling and optimization of discrete-event and hybrid systems with applications to transportation systems, air traffic management, energy management, and health care systems.

Yong-Duan Song (SM'10) received the Ph.D. degree in electrical and computer engineering from Tennessee Technological University, Cookeville, TN, USA, in 1992.

He held a tenured Full Professor position with North Carolina A&T State University, Greensboro, NC, USA, from 1993 to 2008 and a Langley Distinguished Professor position with the National Institute of Aerospace, Hampton, VA, USA, from 2005 to 2008. He is currently the Dean of the School of Automation, Chongqing University, Chongqing, China, and the Founding Director of the Institute of Smart Systems and Renewable Energy, Chongqing University. He was one of the six Langley Distinguished Professors with the National Institute of Aerospace (NIA) and is the Founding Director of Cooperative Systems at NIA. His research interests include intelligent systems, guidance navigation and control, bio-inspired adaptive and cooperative systems, rail traffic control and safety, and smart grid.

Dr. Song has served as an Associate Editor/Guest Editor for several prestigious scientific journals.

Authorized licensed use limited to: Northeastern University. Downloaded on July 15,2025 at 08:09:13 UTC from IEEE Xplore. Restrictions apply.