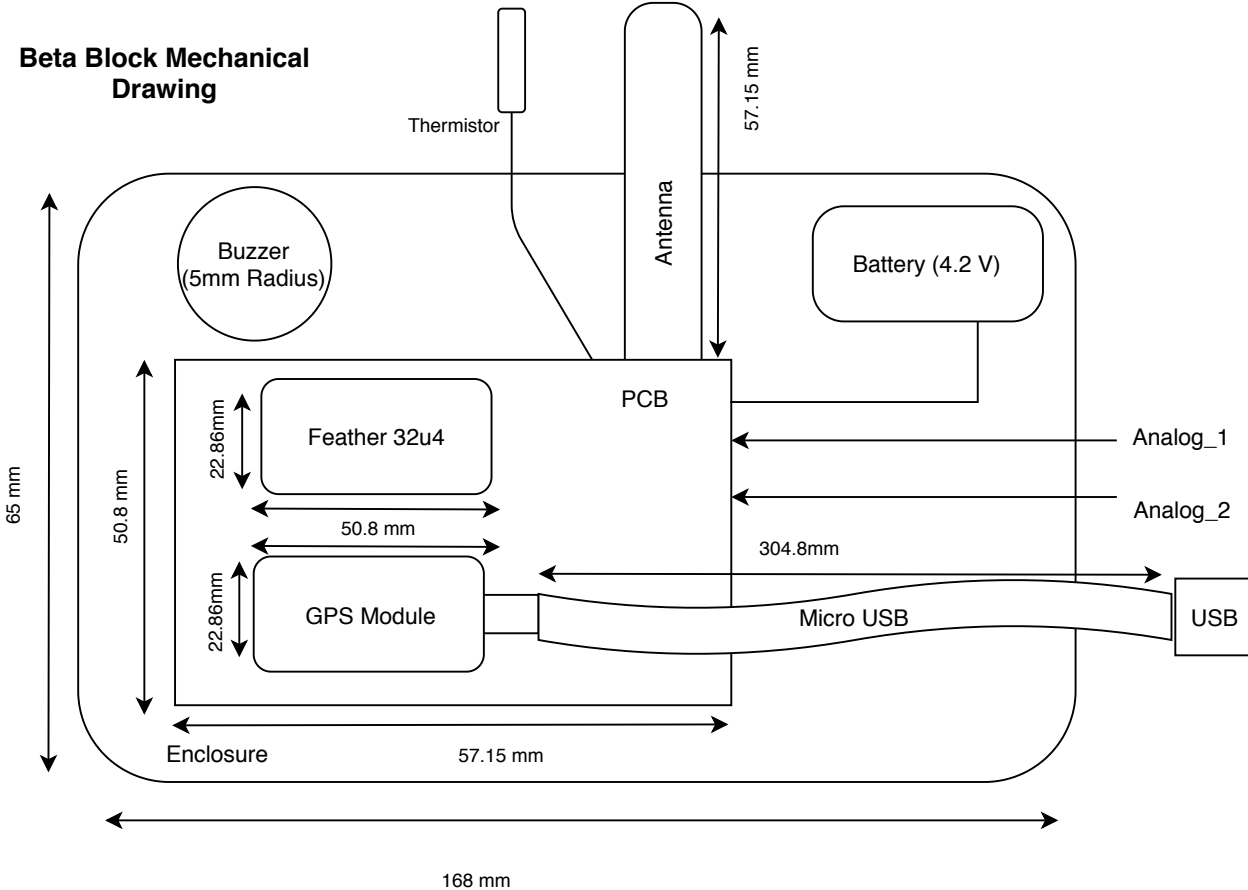Beta Block Mechanical Drawing