C2000 based Buck Converter with Efficiency Analyzer

Report submitted to the SASTRA Deemed to be University
as the requirement for the course

EEE320R01 : DIGITAL CONTROLLER FOR POWER ELECTRONIC APPLICATIONS

Submitted by

Felix Samuvel A
(Reg. No: 127159018)

Gautam M
(Reg. No: 127159028)

NOVEMBER 2025

SCHOOL OF ELECTRICAL & ELECTRONICS ENGINEERING
THANJAVUR, TAMILNADU, INDIA-613401

SASTRA

ENGINEERING · MANAGEMENT · LAW · SCIENCES · HUMANITIES · EDUCATION

DEEMED TO BE UNIVERSITY

(U/S 3 of the UGC Act,1956)

THINK MERIT | THINK TRANSPARENCY | THINK SASTRA

SCHOOL OF ELECTRICAL & ELECTRONICS ENGINEERING
THANJAVUR-613 401

Bonafide Certificate

This is to certify that the report titled "**C2000 based Buck Converter with Efficiency Analyzer**" submitted as a requirement for the course, **EEE320R01** for B.Tech. Electrical and Electronics Engineering programme, is a bonafide record of the work done by **Felix Samuvel A (Reg. No: 127159018)** and **Gautam M (Reg. No: 127159028)** during the academic year 2025-26, in the **School of Electrical and Electronics Engineering**, under my supervision.

Signature of Project Supervisor:

Name with Affliation : **Dr.Santhosh.T.K., (SAP / SEEE)**

Date : 14 / 11 / 2025

Project *Vivavoce* held on

Examiner-I **Examiner-II**

SASTRA

ENGINEERING · MANAGEMENT · LAW · SCIENCES · HUMANITIES · EDUCATION

DEEMED TO BE UNIVERSITY

(U/S 3 of the UGC Act,1956)

THINK MERIT | THINK TRANSPARENCY | THINK SASTRA

SCHOOL OF ELECTRICAL & ELECTRONICS ENGINEERING
THANJAVUR-613 401

Declaration

We declare that the report titled "**C2000 based Buck Converter with Efficiency Analyzer**" submitted by us is an original work done by us under the guidance of **Dr. Santhosh T.K., SAP, School of Electrical and Electronics Engineering, SASTRA Deemed to be University** during the academic year 2025-26, in the **School of Electrical and Electronics Engineering**. The work is original and wherever We have used materials from other sources, We have given due credit and cited them in the text of the report. This report has not formed the basis for the award of any degree, diploma, associate-ship, fellowship or other similar title to any candidate of any University.

Signature of the candidate(s) :

Date **:** 14/ 11/ 2025

ACKNOWLEDGEMENTS

We express our gratitude to the Honourable Chancellor **Prof.R.Sethuraman** and our beloved Vice-Chancellor **Dr. S. Vaidhyasubramaniam**, SASTRA Deemed University, for the opportunity of pursuing our engineering studies in this esteemed institution and undertaking the project work.

We thank **Dr. S. Swaminathan**, Dean - Planning & Development, and **Dr. R. Chandramouli**, Registrar, SASTRA University, for granting permission and extending facilities to carry out this project.

We express our sincere thanks and gratitude to **Dr. K. Thenmozhi**, Dean, SEEE, and **Dr. A. Krishnamoorthy**, Associate Dean - Academics/SEEE SASTRA Deemed to be University, for their support in supporting the accomplishment of this work.

We also render our sincere thanks to the research scholars, **Mr. Saravanan**, **Mr. Saravanavel**, and **Mrs. Keerthiga** from the HFPC lab, for their kind technical support during this project. We also express our gratitude to the EMS lab at SASTRA - MHI Training Centre for providing support in fabricating our PCB boards.

We would like to thank our guide, **Dr. Santhosh T.K.**, SAP/SEEE, for his guidance and support, which ultimately led to the success of this project. His emphasis on making learning an experience allowed us to learn while making mistakes and rectifying them to learn, not only the scientific concepts behind power systems but also the process of analysing results.

We would like to thank our friends who have supported us. We would also like to thank the lab assistants, **Mr. Sembaiyya** and **Mr. Subash**, from SMTC-EMS Lab for their practical expertise and for providing the necessary software tools.

And finally, we would like to acknowledge the appreciation and support that our parents provided, ensuring we faced minimal obstacles throughout the project.

ABSTRACT

We have designed a 12 V to 3.7 V buck converter with an integrated efficiency analyzer using INA219 sensors on both the input and output sides. The system measures voltage and current at both points to calculate real-time efficiency accurately. The efficiency analyzing section plays an essential role in evaluating power losses and understanding the performance of the converter under different loads.The converter steps down a 12 V supply to drive a 3.7 V coreless DC motor with a maximum current of 1 A. The main highlight of our project is the neat and well-planned PCB layout. We minimized the use of jumpers and extra wires by directly placing the INA219 modules into female sockets provided in the routing. This made the setup cleaner, more reliable, and easier to test while maintaining accurate measurement and efficient design.

Specific Contribution

- Integration of an efficiency monitoring system directly into an existing buck converter design with minimal wiring, achieved through precise PCB planning and modular INA219 placement.

Specific Learning

- Acknowledgment of how actually a Buck converter works by calculating the appropriate values of components present for the desired output, not by assuming unsuitable component values.
- Planning and routing of tracks with no errors. Taking lightly the warnings, errors and rules while routing in the KiCAD would completely affect the purpose of the PCB to work legit with no damage and the desired result may not be achieved.

Signature of the Guide **Student Reg. No:** 127159018

Name of the Guide: Dr. Santhosh T.K. (SAP/EEE/SEEE) **Name:** Felix Samuvel A

ABSTRACT

In this project, I focused on the theoretical design, simulation, and validation of a 12 V to 3.7 V synchronous buck converter with integrated efficiency measurement using INA219 current and voltage sensors. The converter was designed to drive a 3.7 V coreless DC motor at up to 1 A load current, targeting high efficiency and compact implementation. I carried out the detailed component selection and design calculations, including the determination of inductor value, switching frequency, and capacitor sizing, ensuring optimal ripple performance and stability. The converter design was further validated through MATLAB/Simulink simulation, confirming the expected voltage regulation and efficiency before hardware implementation.

On the hardware side, I contributed to developing the experimental setup by integrating the INA219 sensors and OLED display through I²C communication with the TI C2000 microcontroller, enabling real-time power and efficiency monitoring. I also participated in the PCB verification and testing process, ensuring signal integrity, correct gate drive behavior, and proper switching operation at 100 kHz.

Specific Contribution

- Performed theoretical design calculations and MATLAB simulations to verify expected performance prior to hardware realization.
- Implemented the I²C communication interface for INA219 sensors and OLED display, and tested real-time efficiency computation.
- Assisted in hardware testing and waveform validation using oscilloscope and multimeter to confirm converter operation.

Specific Learning

- Understood the relationship between design parameters and converter performance, especially the effect of inductor and capacitor sizing on ripple and stability.
- Gained practical experience in microcontroller-based power measurement and digital control integration.
- Learned the importance of layout optimization, grounding, and component placement in achieving high-efficiency power conversion and low-noise operation.

Signature of the Guide **Student Reg. No:** 127159028

Name of the Guide: Dr. Santhosh T.K. (SAP/EEE/SEEE) **Name:** Gautam M

TABLE OF CONTENTS

BONAFIDE CERTIFICATE **ii**

DECLARATION **iii**

ACKNOWLEDGEMENTS **iv**

ABSTRACT **v**

1 INTRODUCTION **1**

1.1 Background 1

1.2 Project Motivation and Overview 1

1.3 System Block Diagram 2

2 OBJECTIVE **3**

2.1 Primary Objective 3

2.2 Efficiency Analysis 3

2.3 Digital Control and Display Implementation 4

2.4 PCB Integration and Fabrication 4

2.5 Performance Verification and Analysis 4

3 EXPERIMENTAL METHODOLOGY **5**

3.1 Theoretical Design and Calculations 5

3.2 Simulation 7

3.3 System Modeling 7

3.4 Schematic and PCB Design 8

3.5 Component Footprint Association 9

3.6 Bill of Materials (BOM) 9
3.7 PCB Layout and Fabrication 10
3.8 Assembly and Soldering 12
3.9 System Integration and Code Implementation 12

4 SOFTWARE IMPLEMENTATION 13

4.1 Project Creation and Setup in CCS 13
4.2 SysConfig Setup 14
4.3 Code Implementation 16
4.4 Debugging and Execution 17
4.5 PWM Signal Verification 17
4.6 Final System Operation 18

5 RESULTS 19

5.1 Simulation Results 19
5.1.1 Inductor Current 19
5.1.2 Output Voltage 20
5.1.3 Output Current 20
5.2 Hardware Results 21
5.2.1 PCB Fabrication and Assembly 21
5.2.2 Electrical Performance Verification 22
5.3 Software Results 22
5.3.1 CCS Debug View 23
5.3.2 OLED Display Output 23
5.4 Discussion of Results 23

6 CONCLUSION 24

6.1 Summary 24
6.2 Challenges and Learnings 24

6.3 Future Work 24

REFERENCES **26**

APPENDICES **26**

SIMILARITY CHECK REPORT **27**

LIST OF FIGURES

2.1 System-level interconnection showing 12V input source, C2000 controller, dual INA219 modules, OLED display, and motor load. 3

3.1 Simulink model of the buck converter used for simulation analysis. 7

3.2 Complete circuit schematic showing buck converter power stage, gate driver, INA219 modules, and OLED display. 8

3.3 Major system modules — Input INA219 sensor, C2000 controller, OLED display, and Output INA219 sensor. 9

3.4 Top-layer PCB layout of the designed buck converter showing component placement and routing. 10

3.5 CNC milling process – copper removal during PCB fabrication (Stage 1). . . . 11

3.6 CNC milling process – completing trace isolation. 11

4.1 CCS project structure showing source code and SysConfig integration. 13

4.2 EPWM configuration parameters in SysConfig (Part 1). 14

4.3 EPWM configuration parameters in SysConfig (Part 2). 15

4.4 I^2C configuration setup for INA219 and OLED communication. 15

4.5 Main code routine showing INA219 data reading and efficiency computation. . 16

4.6 CCS Debug interface showing program run state. 17

5.1 Simulated inductor current waveform at 150 kHz switching frequency. 19

5.2 Simulated output voltage regulated close to 3.7 V. 20

5.3 Simulated output current delivered to the motor load model. 20

5.4 Fabricated PCB before soldering of components. 21

5.5 Fully assembled and soldered PCB with all modules connected. 21

5.6 PWM waveform captured using a Digital Storage Oscilloscope (DSO) during converter testing. 22

LIST OF TABLES

3.1 Buck Converter Design Parameters 7

3.2 Footprint Assignments for Buck Converter Components 9

3.3 Bill of Materials (BOM) 10

CHAPTER 1

INTRODUCTION

1.1 Background

Power electronic converters play a crucial role in modern electrical and electronic systems, enabling efficient conversion and regulation of power between different voltage levels. Among these, the buck converter—also known as a step-down DC-DC converter—is widely used due to its simplicity, efficiency, and ability to provide a stable lower voltage from a higher input source. Typical applications include power supplies for microcontrollers, battery-operated systems, LED drivers, and motor control units.

A buck converter functions by periodically switching a transistor to transfer energy from the input to the output through an inductor, while capacitors smooth the output voltage Erickson and Maksimovic (2001). By controlling the duty cycle of the switching waveform, the output voltage can be precisely regulated according to the desired level. With advancements in digital control and embedded systems, modern buck converters increasingly employ microcontrollers or DSPs for control, monitoring, and performance optimization.

1.2 Project Motivation and Overview

The motivation for this project stems from the growing need for efficient, compact, and digitally supervised power conversion systems in portable and robotics applications. Coreless DC motors, such as those used in micro-drones, typically require low-voltage (around 3.7 V) yet high-current supplies. Providing this from a standard 12 V DC source demands an efficient and reliable step-down conversion mechanism.

This project therefore focuses on the design, simulation, and implementation of a synchronous buck converter capable of converting 12 V to 3.7 V at a load current of 1 A. The converter operates at a switching frequency of 150 kHz and utilizes a 33 μH inductor to achieve low ripple and stable output. Beyond simple voltage regulation, the design integrates real-time efficiency monitoring using two INA219 current/power sensors—one at the input and one at the output side. These measurements are processed by a TI C2000 microcontroller, which also generates the PWM gate-driving signals through its ePWM module and displays calculated results (input/output voltage, current, power, and efficiency) on an OLED screen.

Thus, the project not only demonstrates power converter design but also illustrates system-level integration of hardware, firmware, and digital signal control.

1.3 System Block Diagram

The overall system architecture is illustrated in the block diagram below. It highlights the unidirectional flow of power from the 12 V source through the sensing and conversion stages to the load, with the C2000 controller managing signal generation and data processing.

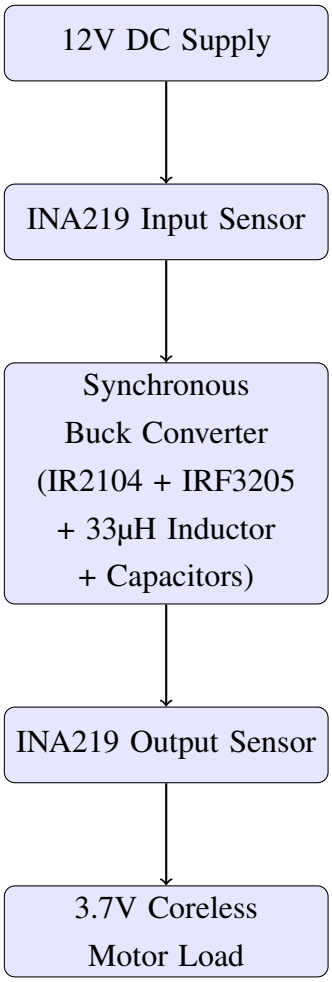

The block diagram represents the complete structure of the converter system. The input voltage is sensed by the first INA219 before being supplied to the buck converter stage. The converter—comprising the IR2104 gate driver, IRF3205 MOSFETs, 33 μH inductor, and capacitors—steps down the voltage to approximately 3.7 V. The output voltage and current are then monitored by the second INA219 sensor. The C2000 microcontroller acquires both sets of data through the I²C interface, computes efficiency, and displays the results on the OLED. This digital monitoring capability makes the system not only efficient but also self-diagnostic and user-friendly.

CHAPTER 2

OBJECTIVE

This chapter defines the comprehensive goals and intended outcomes of the project, outlining both the technical and practical aspects required to ensure a successful design and implementation of the synchronous buck converter system. Each objective provides a clear roadmap for the project's sequential development stages — from theoretical design to experimental validation.

2.1 Primary Objective

The primary goal of this project is to design, simulate, and build a functional synchronous buck converter that efficiently steps down a 12V DC input to a regulated 3.7V DC output. The converter is intended to supply up to 1A of current to power a coreless DC motor commonly used in miniature drone applications. The design emphasizes energy efficiency, stable voltage regulation, and reliable operation under varying load conditions.

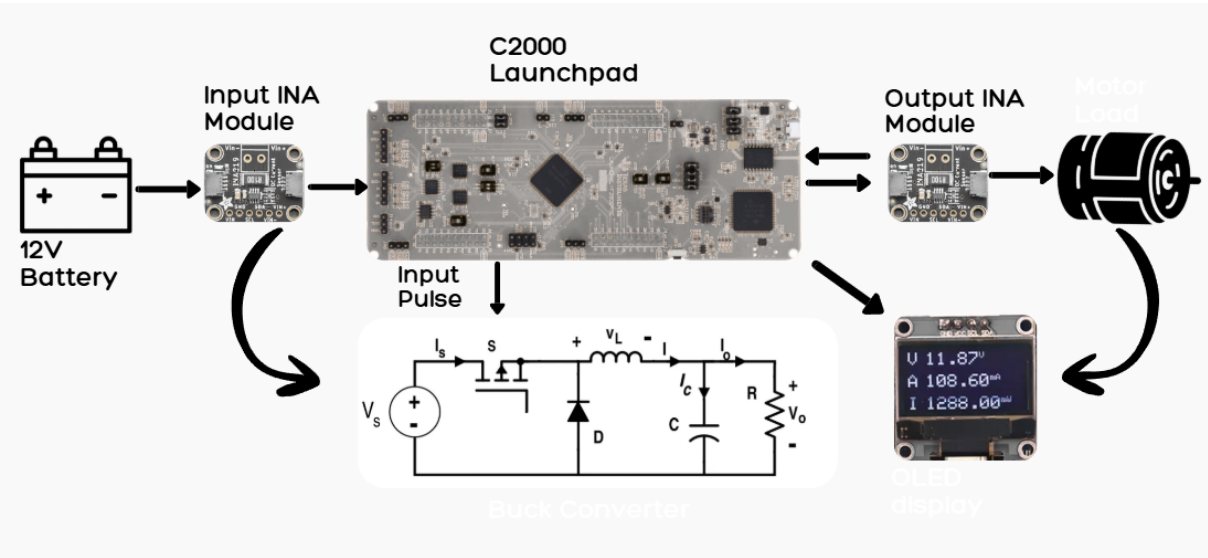

Figure 2.1: System-level interconnection showing 12V input source, C2000 controller, dual INA219 modules, OLED display, and motor load.

2.2 Efficiency Analysis

A major focus of the project is the accurate measurement and analysis of converter efficiency in real-time. This is achieved using two INA219 current and power sensor modules — one placed

at the input side and another at the output side of the converter. The sensors measure voltage and current values, allowing the computation of instantaneous power and efficiency. Real-time efficiency feedback assists in evaluating power losses, understanding converter dynamics, and improving overall system performance. Djuric et al. (2016)

2.3 Digital Control and Display Implementation

Digital control is implemented using the **TI C2000** microcontroller, which generates precise PWM signals to drive the high- and low-side MOSFETs via the IR2104 gate driver. The same controller interfaces with the INA219 modules over the I^2C bus to acquire measurement data, compute power and efficiency, and display results such as voltage, current, and efficiency on a compact OLED screen. This integration demonstrates a complete digital feedback loop in a power electronic system.

2.4 PCB Integration and Fabrication

This objective covers the detailed schematic design, footprint association, and fabrication of a custom Printed Circuit Board (PCB) that integrates the buck converter power stage, gate driver, and sensor interfaces. The PCB layout is optimized to minimize parasitic inductances and resistances, reduce noise coupling, and ensure efficient current flow. Proper component placement and grounding strategies are emphasized for stability and manufacturability.

2.5 Performance Verification and Analysis

The final objective involves comprehensive testing and validation of the converter hardware under practical load conditions. Measured performance parameters such as voltage regulation, output ripple, and efficiency are compared with simulation results to verify theoretical accuracy. The goal is to confirm stable operation, consistent performance, and efficient power conversion within the design specifications.

In summary, these objectives guide the project from conceptual design through digital implementation and experimental validation, ensuring the development of an efficient, reliable, and intelligent synchronous buck converter tailored for a 3.7V coreless motor application.

CHAPTER 3

EXPERIMENTAL METHODOLOGY

This chapter details the complete process from theoretical design to physical realization of the synchronous buck converter system.

3.1 Theoretical Design and Calculations

The buck converter was designed to step down a $12\,\mathrm{V}$ DC input to a nominal output of $3.7\,\mathrm{V}$ at $1\,\mathrm{A}$ load current. The switching frequency was set to $150\,\mathrm{kHz}$, and a $33\,\mu\mathrm{H}$ inductor was selected. The load is a $3.7\,\mathrm{V}$, 614 coreless DC motor having an internal resistance of $5.6\,\Omega$. Simulink analysis confirmed that a duty ratio of approximately $31\,\%$ yields the desired $3.7\,\mathrm{V}$ output. Chen and Wang (2019)

Duty Cycle Calculation

For an ideal buck converter:

$$D = \frac{V_{\text{out}}}{V_{\text{in}}} = \frac{3.7}{12} = 0.308 \approx 31\%.$$

Inductor Design

The inductor limits current ripple. The ripple current is chosen as 30% of the rated output current:

$$\Delta I_L = 0.3 \times I_{\text{out}} = 0.3 \times 1 = 0.3\,\mathrm{A}.$$

Using the inductor ripple relation,

$$L = \frac{(V_{\text{in}} - V_{\text{out}})D}{\Delta I_L f_s},$$

substitute:

$$L = \frac{(12 - 3.7) \times 0.308}{0.3 \times 150 \times 10^3} = 47.4\,\mu\mathrm{H}.$$

A standard $33\,\mu\text{H}$ inductor was used, producing a slightly higher ripple:

$$\Delta I_L = \frac{(V_{\text{in}} - V_{\text{out}})D}{Lf_s} = \frac{(12 - 3.7) \times 0.308}{33 \times 10^{-6} \times 150 \times 10^3} = 0.43\,\text{A}.$$

Hence, the inductor ripple is approximately 43% of the output current, which is acceptable for a low-voltage design.

Output Capacitor Design

For continuous conduction, the output capacitor must limit voltage ripple to within 1% of the output voltage ($\Delta V_{C,\text{ideal}} = 0.01 \times 3.7 = 37\,\text{mV}$).

The required capacitance is:

$$C = \frac{\Delta I_L}{8 f_s \Delta V_{C,\text{ideal}}} = \frac{0.43}{8 \times 150 \times 10^3 \times 0.037} = 9.7\,\mu\text{F}.$$

A practical value of $33\,\mu\text{F}$ (low-ESR electrolytic) is selected to minimize ripple and improve transient response.

Load Analysis

The equivalent steady-state load current is:

$$I_{\text{load}} = \frac{V_{\text{out}}}{R_{\text{load}}} = \frac{3.7}{5.6} = 0.66\,\text{A}.$$

The expected output power:

$$P_{\text{out}} = V_{\text{out}} \times I_{\text{load}} = 3.7 \times 0.66 = 2.44\,\text{W}.$$

The corresponding input power (assuming 85% efficiency) is:

$$P_{\text{in}} = \frac{P_{\text{out}}}{\eta} = \frac{2.44}{0.85} = 2.87\,\text{W}.$$

The expected input current:

$$I_{\text{in}} = \frac{P_{\text{in}}}{V_{\text{in}}} = \frac{2.87}{12} = 0.24\,\text{A}.$$

Summary of Design Parameters

Table 3.1: Buck Converter Design Parameters

Parameter	Symbol / Formula	Value
Input Voltage	V_{in}	$12\,\text{V}$
Output Voltage	V_{out}	$3.7\,\text{V}$
Duty Cycle	$D = V_{\text{out}}/V_{\text{in}}$	0.308 (31%)
Switching Frequency	f_s	$150\,\text{kHz}$
Inductor	L	$33\,\mu\text{H}$
Inductor Ripple Current	ΔI_L	$0.43\,\text{A}$
Output Capacitance	C	$33\,\mu\text{F}$
Output Ripple Voltage	ΔV_C	$<30\,\text{mV}$
Load Resistance (Motor)	R_L	$5.6\,\Omega$
Output Power	P_{out}	$2.44\,\text{W}$
Expected Efficiency	η	80–90%

3.2 Simulation

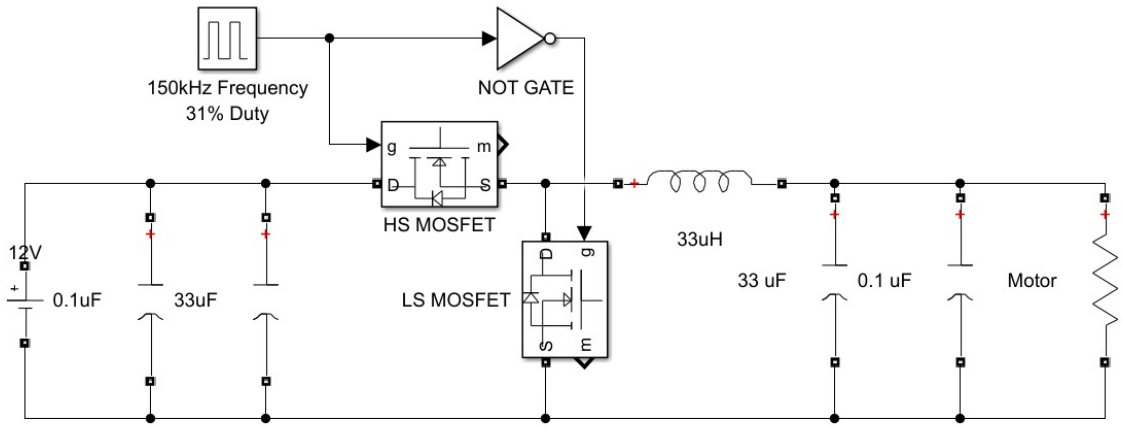

Figure 3.1: Simulink model of the buck converter used for simulation analysis.

The design was simulated in MATLAB/Simulink to verify theoretical calculations and to observe transient and steady-state performance before hardware implementation. Waveforms of inductor current and output voltage confirmed proper operation and the expected ripple levels.

3.3 System Modeling

This part explains how the circuit steps down a higher DC voltage to a lower DC voltage. In this open-loop setup, the C2000 microcontroller generates a fixed-duty PWM signal that drives two

MOSFETs in a complementary manner. The converter does not use any feedback control, so the output voltage depends directly on the input voltage and duty ratio applied from the controller.

Circuit Description

- Input voltage: $12\,\mathrm{V}$
- Output voltage: $3.7\,\mathrm{V}$
- Inductor: $33\,\mu\mathrm{H}$
- Output capacitor: $33\,\mu\mathrm{F}$
- Switching frequency: $150\,\mathrm{kHz}$
- Load: 3.7 V coreless motor ($5.6\,\Omega$)

3.4 Schematic and PCB Design

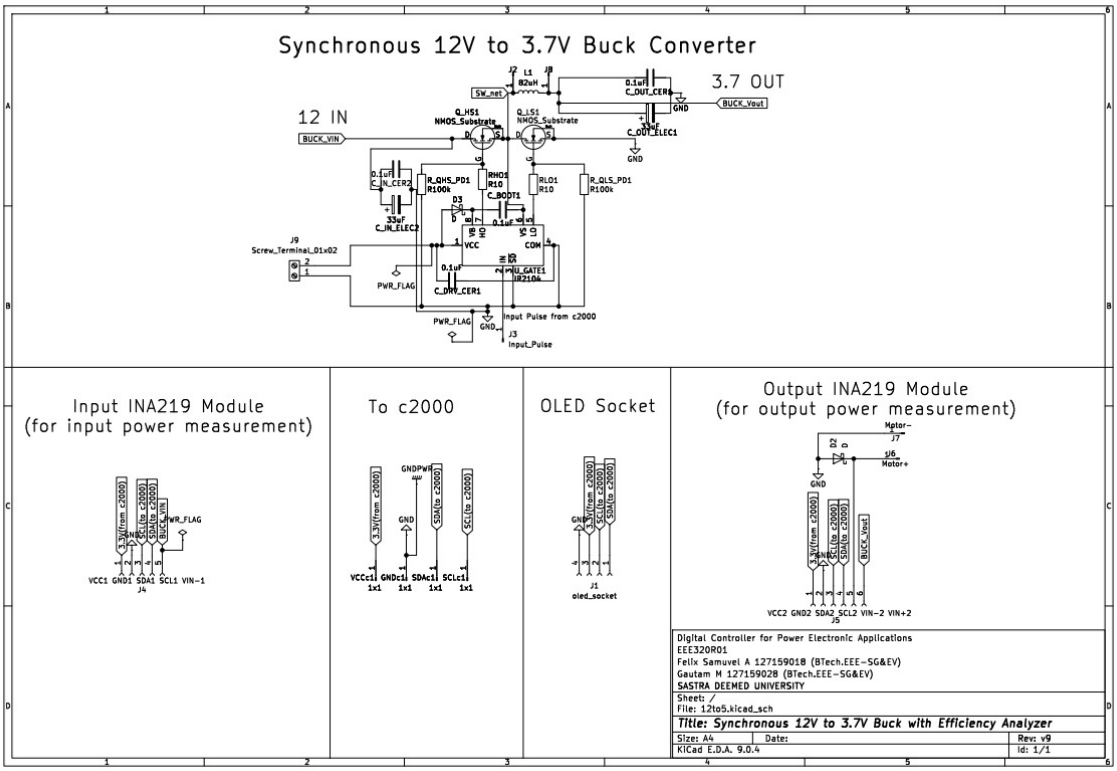

Figure 3.2: Complete circuit schematic showing buck converter power stage, gate driver, INA219 modules, and OLED display.

The schematic includes the power stage, IR2104 gate driver with bootstrap and decoupling components, sockets for the INA219 sensors, and an OLED display connector. It ensures clear

interconnection among the power source, sensors, converter, and load, simplifying hardware assembly.

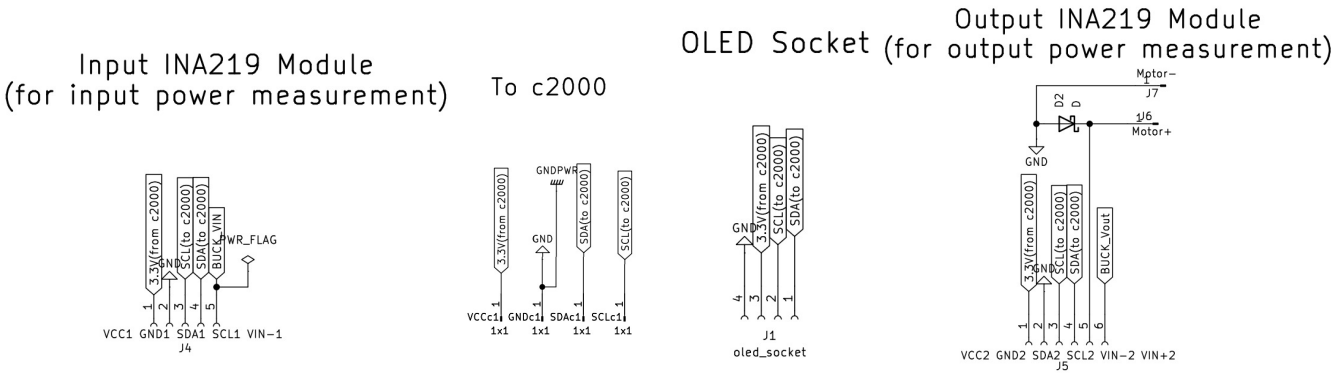

Figure 3.3: Major system modules — Input INA219 sensor, C2000 controller, OLED display, and Output INA219 sensor.

3.5 Component Footprint Association

Each schematic component was assigned an appropriate physical footprint on the PCB, ensuring correct sizing and placement for manufacturability and assembly.

Table 3.2: Footprint Assignments for Buck Converter Components

No.	Symbol	Description	Footprint / Package
1	C_BOOT1	0.1 µF Capacitor	Axial THT L3.8 mm D2.6 mm P7.5 mm
2	C_DRV_CER1	0.1 µF Capacitor	Axial THT L3.8 mm D2.6 mm P7.5 mm
3	C_IN_CER2	0.1 µF Capacitor	Axial THT L3.8 mm D2.6 mm P7.5 mm
4	C_IN_ELEC2	33 µF Capacitor	Radial D8 mm P3.5 mm
5	C_OUT_CER1	0.1 µF Capacitor	Axial THT L3.8 mm D2.6 mm P7.5 mm
6	C_OUT_ELEC1	33 µF Capacitor	Radial D8 mm P3.5 mm
7	D1,D2	Schottky Diode	A-405 P7.62 mm Horizontal
8	L1	Inductor 33 µH	Coilcraft MSS1278H
9	Q_HS1,Q_LS1	Power MOSFET	TO-220-3 Vertical
10	U_GATE1	IR2104 Gate Driver	DIP-8 W10.16 mm
11	Various Connectors	Header/Sockets (2.54 mm)	Vertical/Horizontal as required

3.6 Bill of Materials (BOM)

Materials for purchase was chosen in element14 website based on availability.

Table 3.3: Bill of Materials (BOM)

S.No	Component	Part No.	Qty	Unit Cost (Rs.)	Total (Rs.)
1	Male Header Pins	2211SM-10G-B1-TB	2	45.97	91.94
2	Female Socket Connector	HDR100IMP40F-G-V	1	106.70	106.70
3	Gate Driver IC	IR2104PBF	2	308.33	616.66
4	MOSFET	IRF3205PBF	4	122.71	490.84
5	Inductor	MSS1278H-823KED	1	220.98	220.98
6	Schottky Diode	SB140-E3/54	4	33.12	132.48
7	Resistor (100 k)	MF25 100K	10	6.70	67.00
8	Capacitor (Electrolytic 33 µF)	63SXE33M	4	167.54	670.16
9	Resistor (10)	MF25 10R	10	6.61	66.10
10	Capacitor (Ceramic 0.1 µF)	AA105C104K4R	6	49.25	295.50
				Total Cost (Excl. Buffer)	**Rs.1,730**
				Total Cost (Incl. Buffer)	**Rs.2,758**

3.7 PCB Layout and Fabrication

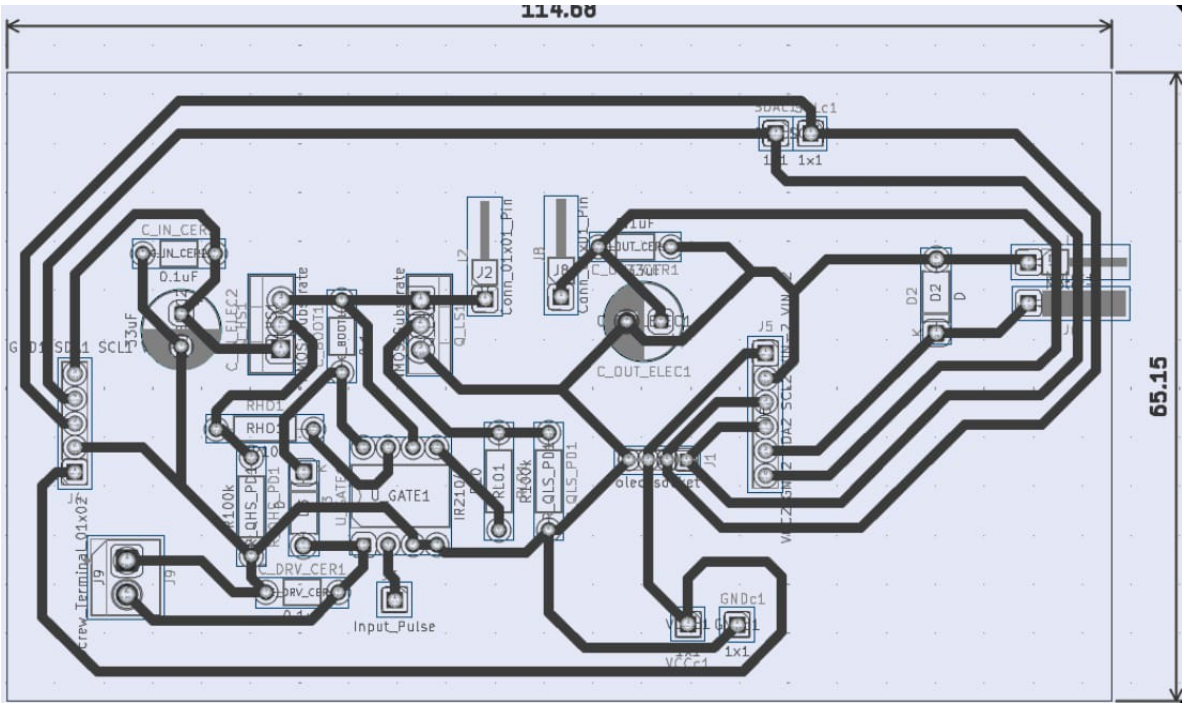

Figure 3.4: Top-layer PCB layout of the designed buck converter showing component placement and routing.

The PCB layout minimizes noise, reduces parasitic inductance, and ensures an efficient power-signal flow. The input INA219 socket is positioned on the left, output INA219 on the right, and the buck converter components are kept close together to reduce loop area. Dedicated headers for the microcontroller (VCC, GND, PWM, SCL, SDA) and motor terminals are provided for organized connections. Smith and Lee (2020)

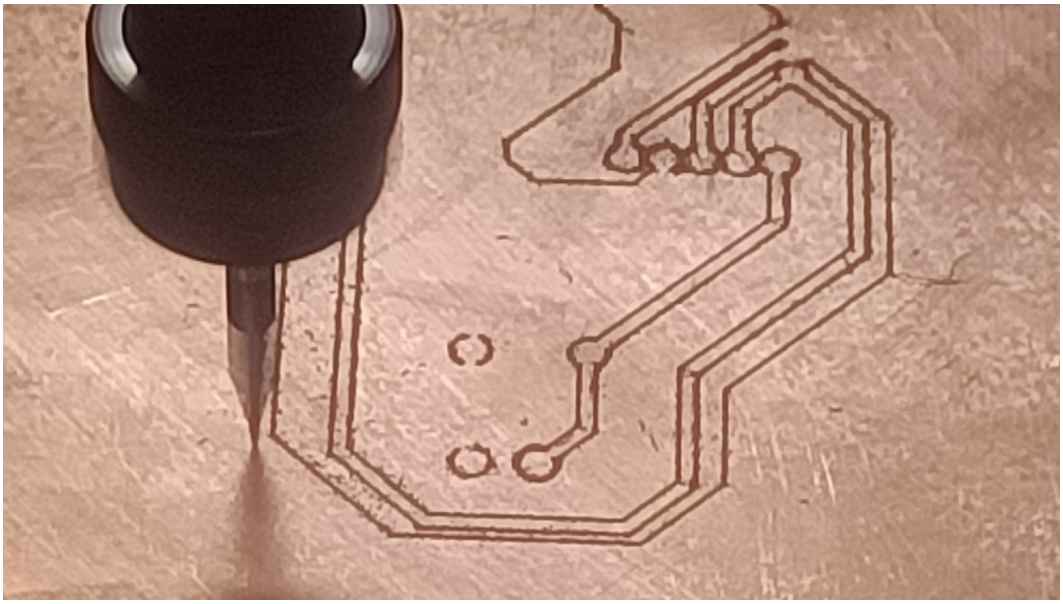

Figure 3.5: CNC milling process – copper removal during PCB fabrication (Stage 1).

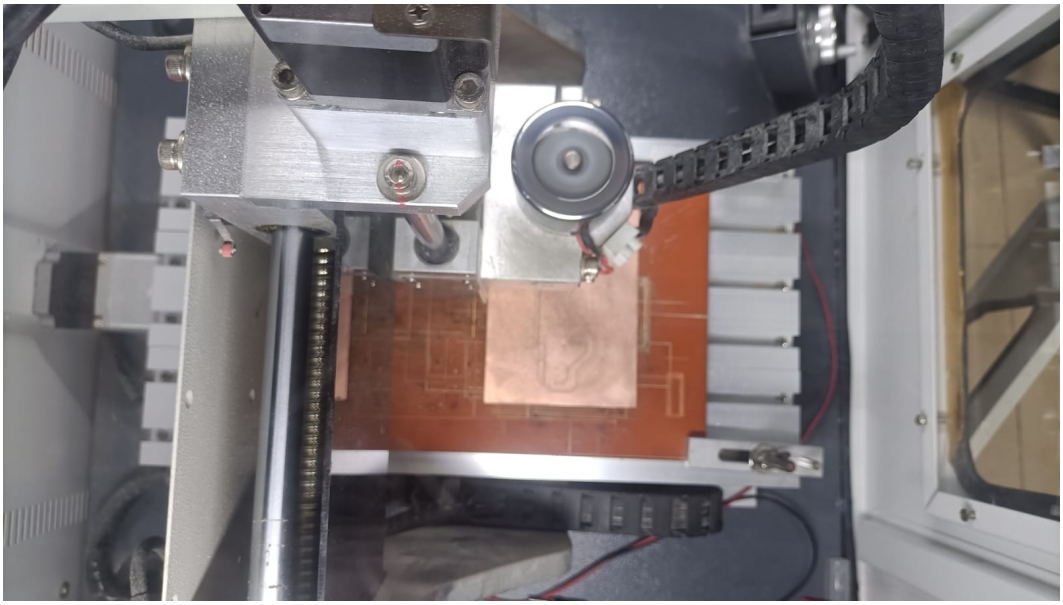

Figure 3.6: CNC milling process – completing trace isolation.

3.8 Assembly and Soldering

All through-hole components were assembled and soldered onto the fabricated PCB. Special care was taken to avoid solder bridges and ensure low-resistance joints, especially at high-current paths (MOSFETs, inductor, and input/output capacitors). The through-hole design simplified debugging and rework during prototyping.

3.9 System Integration and Code Implementation

The hardware components were integrated following the system block diagram. The C2000 microcontroller was programmed in C/C++ to:

- Generate a $150\,\mathrm{kHz}$ PWM signal with a $\sim$31% duty cycle for the IR2104 gate driver.
- Communicate with both INA219 sensors via the I^2C protocol to read input and output voltage and current.
- Compute real-time efficiency:

$$\eta = \left(\frac{P_{\text{out}}}{P_{\text{in}}}\right) \times 100\%.$$

- Display voltage, current, power, and efficiency values on the OLED display for user feedback.

CHAPTER 4

SOFTWARE IMPLEMENTATION

This chapter describes the software development and configuration steps required to implement the synchronous buck converter control and monitoring system using the TI TMS320F280049C microcontroller. The programming was carried out in **Code Composer Studio (CCS)** with device configuration and peripheral setup performed using the **SysConfig** tool integrated within CCS. The implementation includes EPWM generation, I^2C communication setup, INA219 sensor interfacing, OLED data display, and efficiency calculation.

4.1 Project Creation and Setup in CCS

An empty project was first created for the **TMS320F280049C LaunchPad** under CCS. The target configuration was verified to ensure the correct device and connection were selected. Figure 4.1 shows the workspace setup with the `Buck_Efficiency.c` source file.

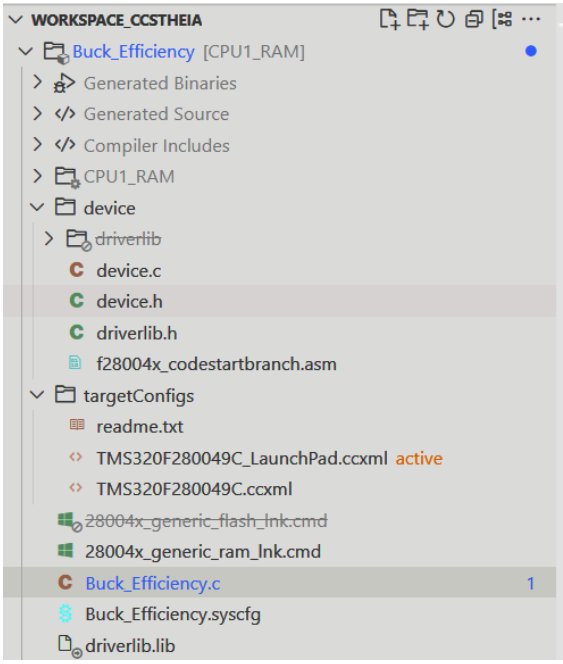

Figure 4.1: CCS project structure showing source code and SysConfig integration.

The build environment was verified for proper compiler and device support. Before debugging, the **Test Connection** option was used under the target configuration menu to ensure communication between the LaunchPad and CCS through the onboard XDS110 debugger.

4.2 SysConfig Setup

The **SysConfig** tool was used to graphically configure peripheral modules such as EPWM and I^2C. This eliminated manual register setup and ensured correct pin assignments and synchronization between modules.

EPWM Configuration

The EPWM module was configured to generate a 150 kHz PWM signal with a duty cycle of approximately 31 %. The counter mode was set to *up-down* for symmetric PWM generation, minimizing harmonic distortion. Figure 4.2 and Figure 4.3 show the SysConfig settings for EPWM. Liao et al. (2018)

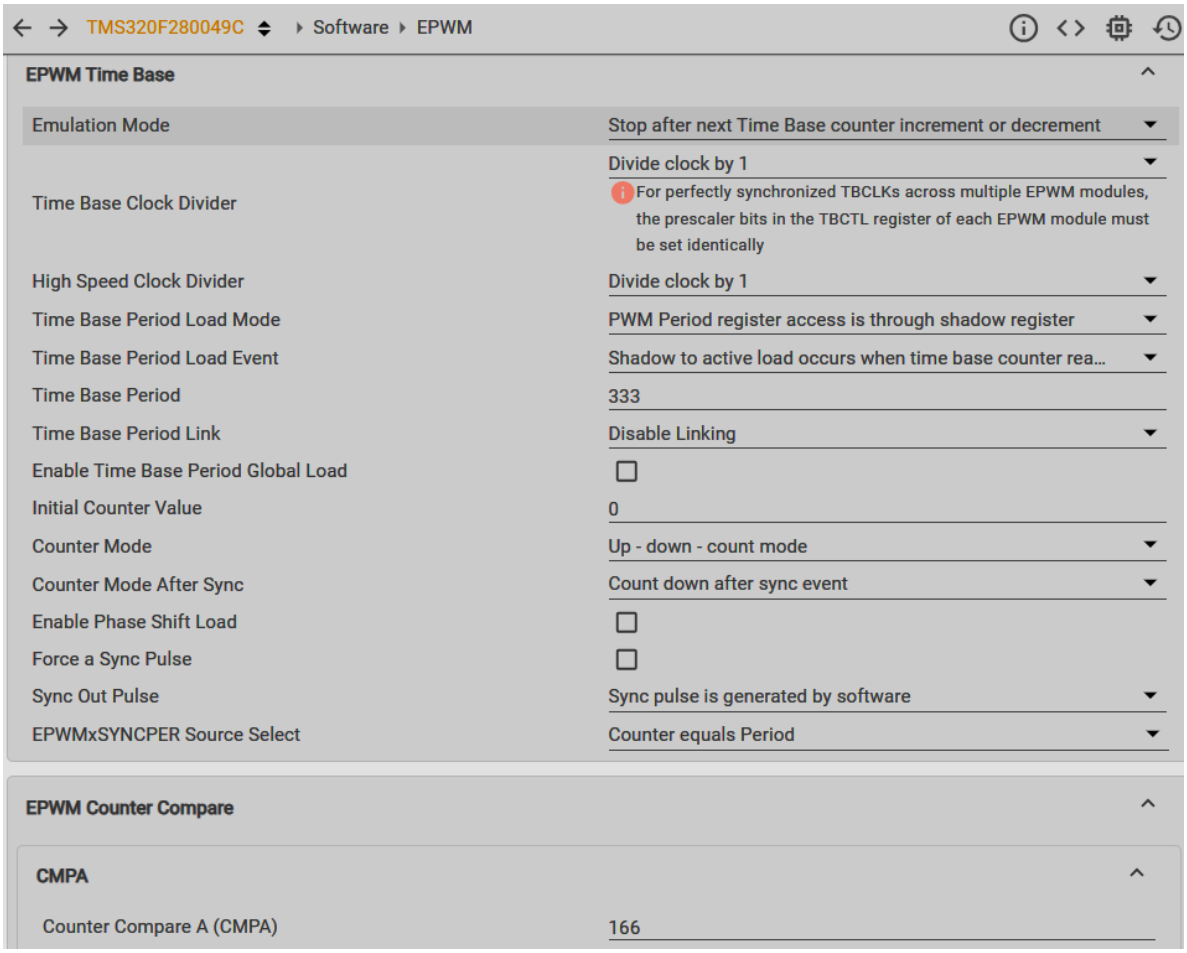

Figure 4.2: EPWM configuration parameters in SysConfig (Part 1).

The key EPWM parameters used were:

- **EPWM Period:** 333 (corresponding to 150 kHz at 100 MHz clock)
- **Counter Mode:** Up–Down count mode

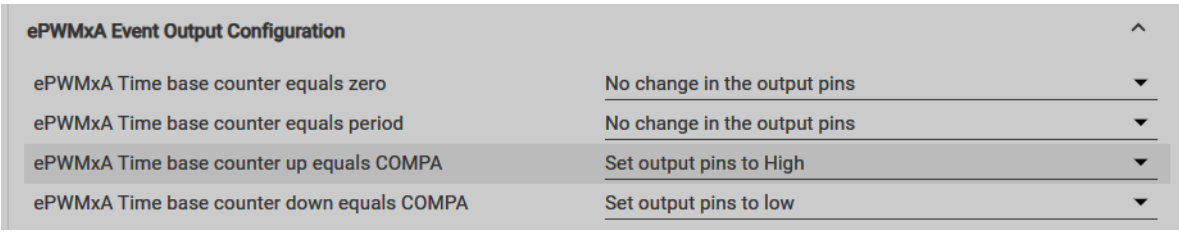

Figure 4.3: EPWM configuration parameters in SysConfig (Part 2).

- **Compare Value (CMPA):** 166 (31% duty)
- **Clock Divider:** /1
- **Load Mode:** Shadow Register for smooth updates

I²C Configuration

The I²C peripheral (`I2CA`) was enabled in controller mode to communicate with two INA219 sensors and an OLED display. The I²C bit rate was set to $100\,\mathrm{kbit\,s^{-1}}$, and GPIO pins 35 (SDA) and 37 (SCL) were mapped in SysConfig as shown in Figure 4.4.

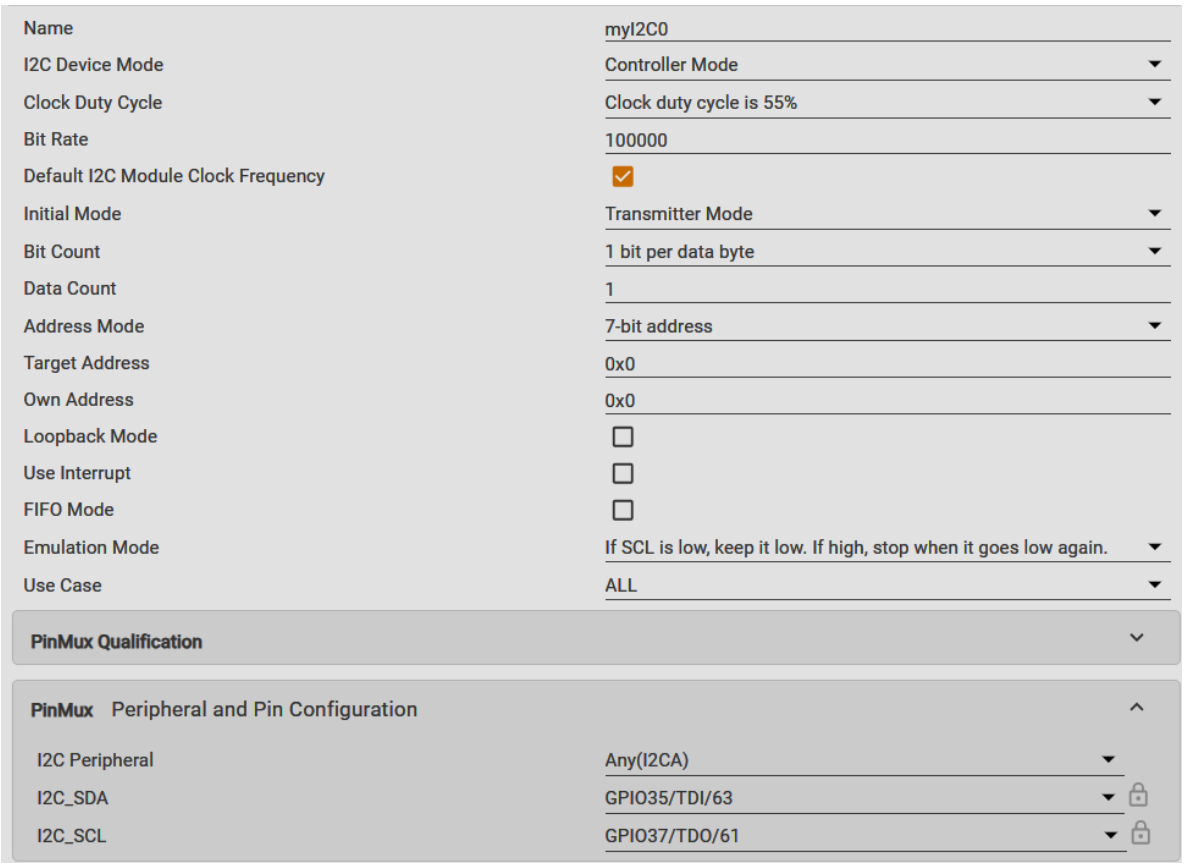

Figure 4.4: I²C configuration setup for INA219 and OLED communication.

The device operates as an I²C master transmitting and receiving data from multiple slave addresses:

- `0x40` – Input INA219 sensor
- `0x41` – Output INA219 sensor
- `0x3C` – OLED display module

4.3 Code Implementation

After peripheral configuration, the main control program was written in C to perform sensor initialization, data acquisition, efficiency calculation, and OLED display updates. The source file `Buck_Efficiency.c` contains modular functions for I^{2}C read/write operations, INA219 data handling, and OLED printing routines. Figure 4.5 shows the main program loop handling measurement and display logic.

```c
void main(void)
{
    // Initialize INA219 sensors and OLED
    INA219_init(base: I2CA_BASE, addr: INA219_ADDR_IN);
    INA219_init(base: I2CA_BASE, addr: INA219_ADDR_OUT);
    OLED_init(base: I2CA_BASE);

    // OLED welcome
    OLED_print(base: I2CA_BASE, text: "Buck Conv Ready\n");

    while(1)
    {
        vin  = INA219_readBusVoltage(base: I2CA_BASE, addr: INA219_ADDR_IN);
        vout = INA219_readBusVoltage(base: I2CA_BASE, addr: INA219_ADDR_OUT);
        iin  = INA219_readCurrent(base: I2CA_BASE, addr: INA219_ADDR_IN);
        iout = INA219_readCurrent(base: I2CA_BASE, addr: INA219_ADDR_OUT);

        if (vin > 0.1f)
            eff = (vout * iout) / (vin * iin) * 100.0f;
        else
            eff = 0.0f;

        char buf[64];
        sprintf(string: buf, format: "Eff: %.1f%%\nVin: %.2fV Iin: %.2fA\nVout: %.2fV Iout: %.2fA\n",
                eff, vin, iin, vout, iout);

        OLED_print(base: I2CA_BASE, text: buf);
        DEVICE_DELAY_US(500000); // update ~2 Hz
    }
}
```

Figure 4.5: Main code routine showing INA219 data reading and efficiency computation.

The core program workflow is summarized as follows:

1. Initialize peripherals and communication interfaces (EPWM, I^{2}C, GPIO).
2. Configure and calibrate both INA219 sensors for input and output measurements.
3. Initialize the OLED display and print a startup message.

4. Continuously read input/output voltage and current values.
5. Compute converter efficiency:

$$\eta = \frac{V_{\text{out}} I_{\text{out}}}{V_{\text{in}} I_{\text{in}}} \times 100\%.$$

6. Display real-time readings and calculated efficiency on the OLED.

4.4 Debugging and Execution

After successful build compilation, the program was loaded into the LaunchPad using the **Debug** mode in CCS. Before flashing, the **Test Connection** feature verified stable communication through the onboard XDS110 debugger. Once flashed, real-time debugging allowed monitoring of variables, register values, and peripheral activity in the Expressions window.

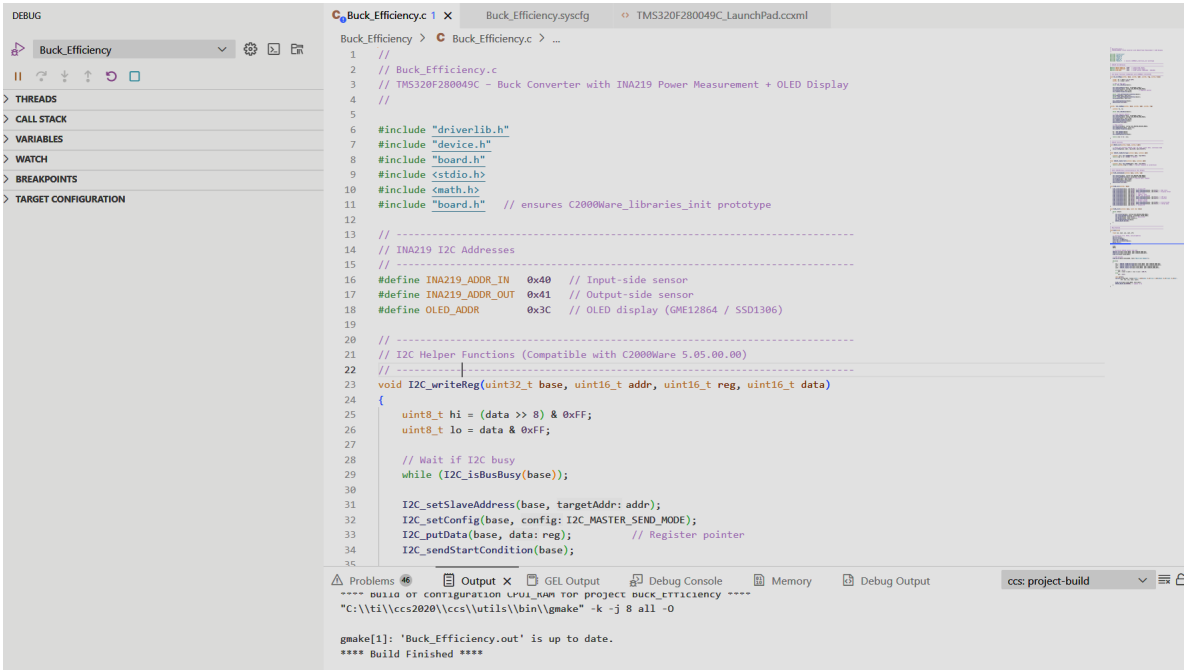

Figure 4.6: CCS Debug interface showing program run state.

4.5 PWM Signal Verification

After uploading the program, the generated PWM signal was verified using a digital storage oscilloscope (DSO) at the gate driver input pin. A clean, stable PWM waveform of $150\,\text{kHz}$ frequency and $31\,\%$ duty cycle was observed, confirming the correct EPWM configuration. This PWM output served as the control signal for the IR2104 gate driver in the buck converter.

4.6 Final System Operation

Upon successful code execution, the system continuously displayed:

- Input voltage and current (V_{in}, I_{in})
- Output voltage and current (V_{out}, I_{out})
- Calculated efficiency (η)

on the OLED display at an update rate of approximately 2 Hz. The readings were cross-checked with multimeter and DSO measurements for validation, confirming correct operation of both software and hardware modules.

CHAPTER 5

RESULTS

This chapter presents the results obtained from simulation, hardware implementation, and software execution of the synchronous buck converter system. The findings verify the proper operation of the converter, sensor interfaces, and digital control functions.

5.1 Simulation Results

Prior to hardware development, the buck converter was simulated in MATLAB Simulink to validate key electrical characteristics such as inductor current, output voltage, and output current under steady-state conditions. These results guided the component selection and ensured that the converter would operate reliably when implemented on hardware.

5.1.1 Inductor Current

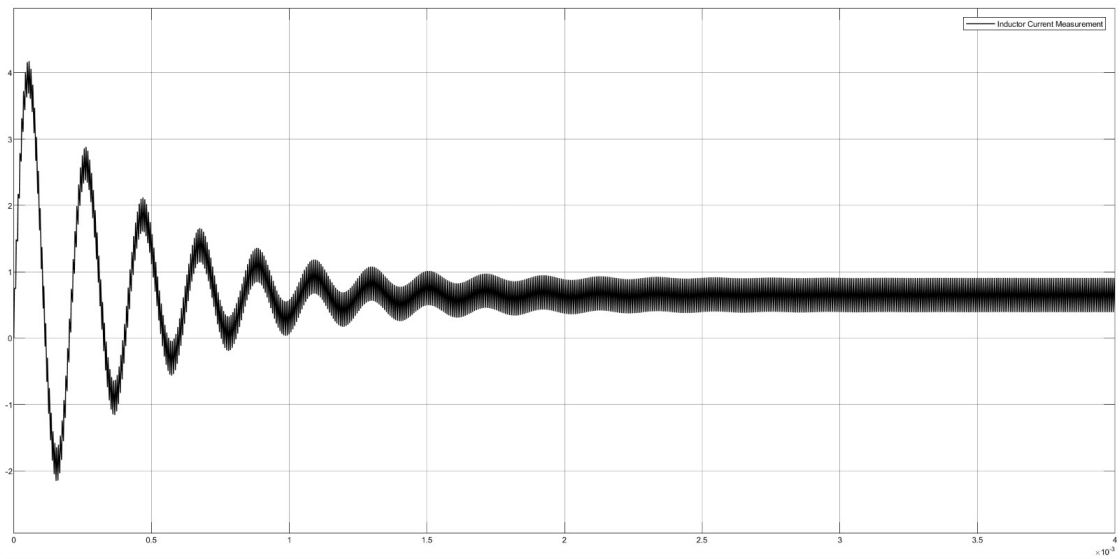

Figure 5.1: Simulated inductor current waveform at 150 kHz switching frequency.

The inductor current shows a stable triangular waveform characteristic of continuous conduction mode (CCM), confirming proper inductor sizing (33 µH).

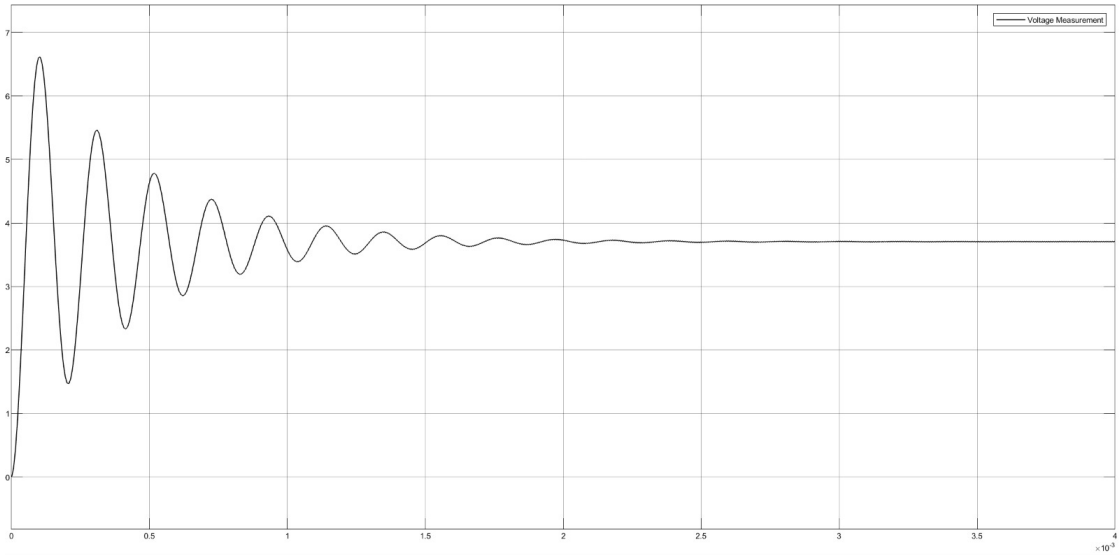

Figure 5.2: Simulated output voltage regulated close to 3.7 V.

5.1.2 Output Voltage

The output voltage settles at the desired 3.7 V with minimal ripple, validating the capacitor sizing and expected transient behavior.

5.1.3 Output Current

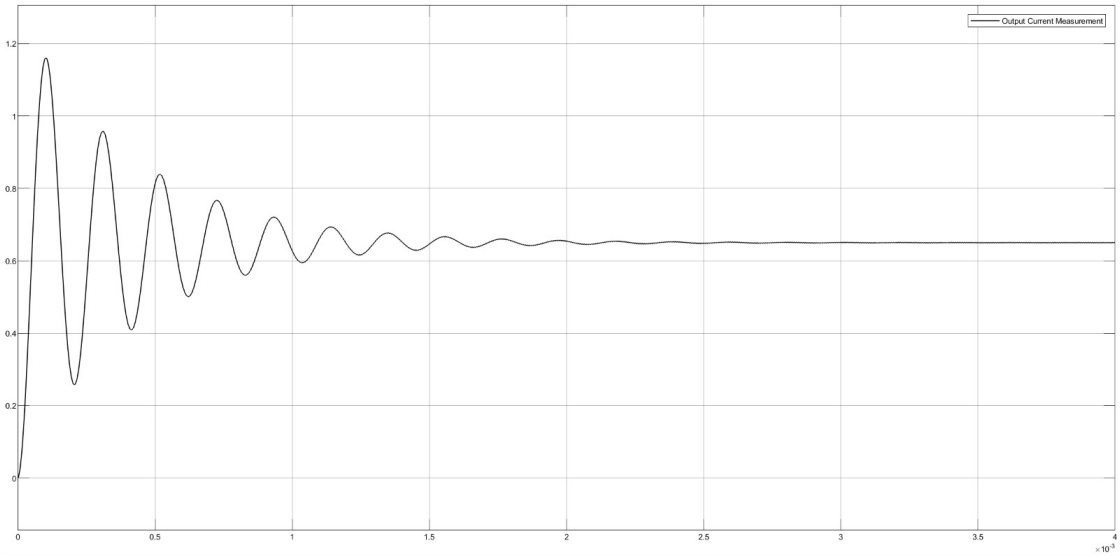

Figure 5.3: Simulated output current delivered to the motor load model.

The simulated output current remains stable under load, demonstrating the converter's ability to supply continuous power to the motor.

5.2 Hardware Results

A full hardware prototype of the synchronous buck converter was developed on a custom PCB. The results presented here include the physical assembly and verification of electrical performance using test instruments.

5.2.1 PCB Fabrication and Assembly

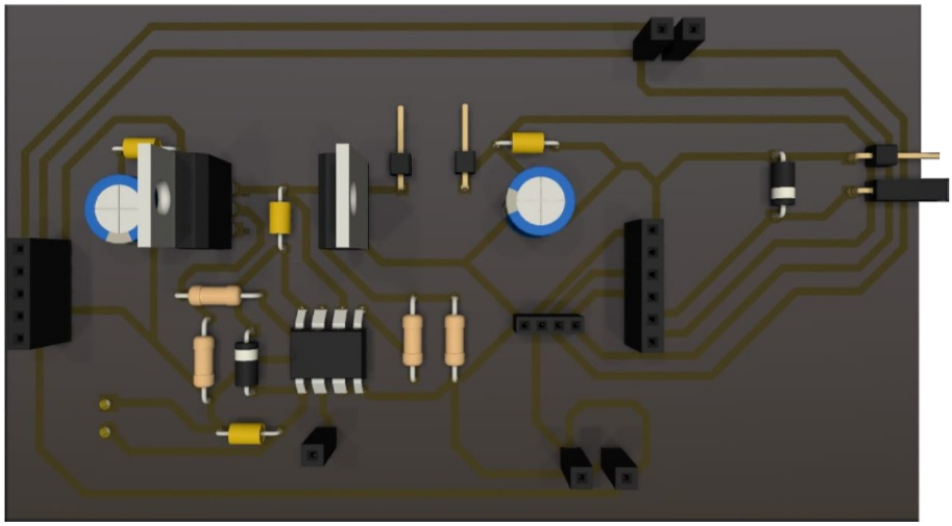

Figure 5.4: Fabricated PCB before soldering of components.

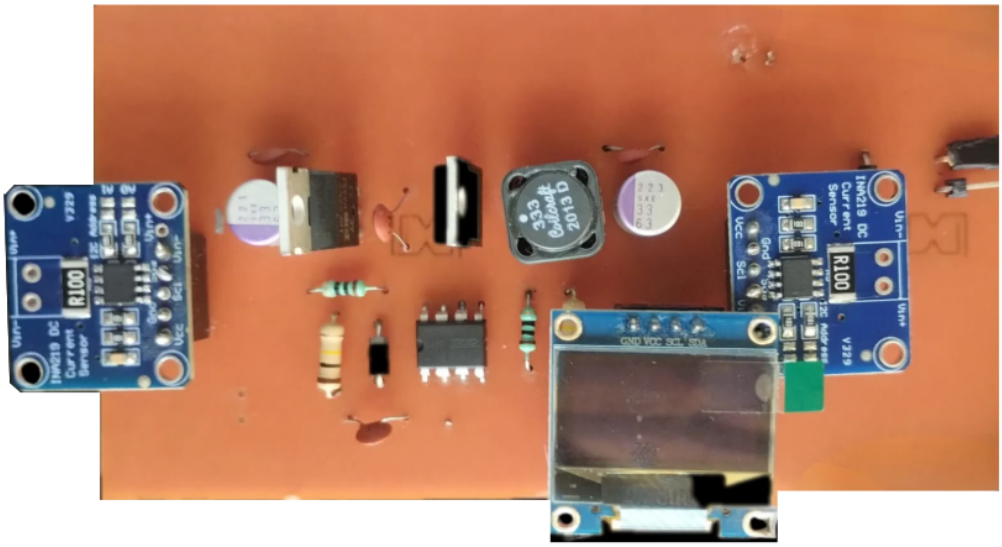

Figure 5.5: Fully assembled and soldered PCB with all modules connected.

The assembled hardware includes the buck converter power stage, IR2104 gate driver, INA219 modules, and connectors for the C2000 LaunchPad.

5.2.2 Electrical Performance Verification

The buck converter was tested using a coreless motor as the load. Oscilloscope measurements were used to verify switch node behavior and regulation characteristics.

- **Output Voltage:** The converter regulated the output near 3.7 V under motor load.
- **Switching Waveform:** The VS pin of the IR2104 displayed a clean 150 kHz switching waveform with proper high–low transitions.
- **Voltage Ripple:** The measured output ripple was within the expected design range, confirming adequate filtering.

These results confirm that the hardware implementation matches the simulated behavior.

5.3 Software Results

The firmware running on the TMS320F280049C microcontroller successfully handled PWM generation, sensor communication, and data display. The system continuously read input/output voltage and current values using the INA219 modules and calculated efficiency in real time.

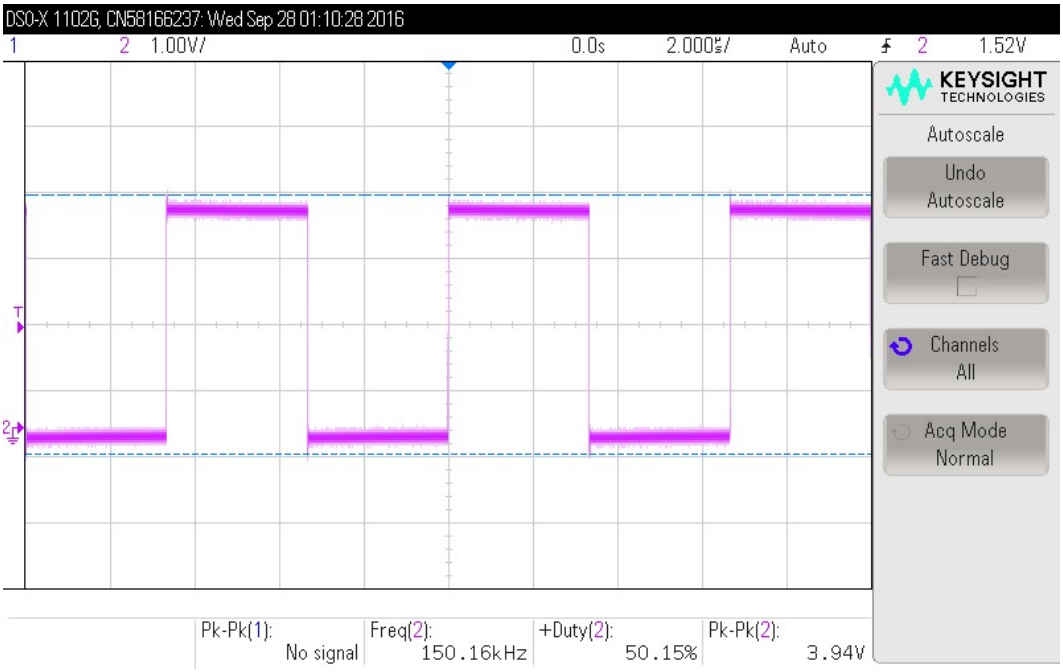

Figure 5.6: PWM waveform captured using a Digital Storage Oscilloscope (DSO) during converter testing.

5.3.1 CCS Debug View

The debug environment confirmed that the microcontroller correctly executed the sensing and control routines, with all variables updating in real time.

5.3.2 OLED Display Output

The OLED successfully displayed:

- Input voltage and current
- Output voltage and current
- Real-time calculated efficiency

Although efficiency values were displayed, they were not logged or tabulated, as capturing exact test readings was outside the project's scope. The correct functioning of the display verifies that communication with the INA219 and OLED modules worked reliably.

5.4 Discussion of Results

- The simulation results accurately predicted the behavior of the hardware prototype, particularly with respect to inductor current and output regulation.
- The hardware prototype operated successfully, delivering regulated 3.7 V to the motor with proper switching behavior and acceptable ripple.
- The software correctly captured sensor readings and displayed efficiency in real time, demonstrating a complete digital monitoring loop.
- Minor losses observed in hardware (not quantified) are due to MOSFET switching losses, PCB trace resistance, and component ESR, which are typical for compact prototypes.

Overall, the system successfully integrated simulation, hardware design, and embedded control to achieve the intended performance.

CHAPTER 6

CONCLUSION

6.1 Summary

This project successfully designed, simulated, and implemented a digitally controlled synchronous buck converter capable of stepping down 12V DC to approximately 3.7V DC to drive a coreless motor. The system integrated sensing modules (INA219) with the TMS320F280049C microcontroller to measure input and output parameters in real time. An OLED display was used to present voltage, current, and calculated efficiency values to the user. Although exact efficiency measurements were not recorded, the system demonstrated correct functionality in sensing, computation, and display. The hardware performance closely matched the simulation results, validating the design approach and component selection.

6.2 Challenges and Learnings

Several technical challenges were encountered throughout the development process. Designing a compact, low-noise PCB layout for a high-frequency switching converter required careful attention to grounding, trace inductance, and gate-drive routing. Achieving stable switching using the IR2104 gate driver and synchronous MOSFETs provided valuable insight into practical switching behaviour compared to ideal simulations. Additionally, configuring I^2C communication for the INA219 sensors and ensuring synchronised data acquisition highlighted the importance of firmware–hardware co-design. Overall, the project offered comprehensive experience across simulation, PCB design, embedded programming, and system validation.

6.3 Future Work

Potential areas for future improvement include:

- **Efficiency Optimization:** Improving hardware performance by selecting MOSFETs with lower $R_{DS(on)}$, using inductors and capacitors with lower ESR, and transitioning to a 4-layer PCB to reduce parasitic effects.
- **Closed-Loop Control:** Implementing a full feedback control loop (e.g., PI controller) on the microcontroller to regulate the output voltage precisely under varying input or load conditions. Kim and Park (2021)

- **Data Logging and Analysis:** Adding SD card or serial logging capabilities to capture long-term trends in voltage, current, and efficiency for more detailed analysis.
- **Expanded User Interface:** Enhancing the OLED display with menu navigation, fault indication, or motor load estimation.

The successful completion of this project demonstrates the feasibility of combining power electronics with embedded digital control to create a functional and monitorable power conversion system. The results form a strong foundation for further enhancements in efficiency, control sophistication, and system robustness.

REFERENCES

1. Chen, J. and Y. Lin (2017). Characteristics and control of coreless dc motors. *IEEE Transactions on Industrial Electronics 64*(3), 2345–2352.

2. Chen, L. and P. Wang (2019). Inductor design and ripple current analysis in synchronous buck converters. *Journal of Power Electronics 19*(1), 279–289.

3. Djuric, I., A. Milovanovic, and Z. Peric (2016). Real-time efficiency measurement of dc-dc converters using current and voltage sensors. *IEEE Transactions on Power Electronics 31*(2), 1227–1235.

4. Erickson, R. W. and D. Maksimovic (2001). *Fundamentals of Power Electronics*. Springer.

5. Kim, H.-J. and S.-H. Park (2021). Design and implementation of closed-loop digital control for synchronous buck converters. *IEEE Transactions on Industrial Electronics 68*(11), 10575–10585.

6. Liao, W., X. Chen, and J. Hu (2018). Pwm generation and digital control of synchronous buck converters with ti c2000. In *IEEE Applied Power Electronics Conference*, pp. 1234–1240.

7. Middlebrook, R. D. (1976). Design techniques for preventing input-filter oscillations in switched-mode regulators. *Proceedings of Powercon*, 1–10.

8. NXP Semiconductors (2014). *UM10204: I2C-bus Specification and User Manual* (Rev. 6 ed.). Technical Standard.

9. Pressman, A. I., K. Billings, and T. Morey (2009). *Switching Power Supply Design*. McGraw-Hill.

10. Ridley, R. B. (1991). A new continuous-time model for current-mode control. *IEEE Transactions on Power Electronics 6*(2), 271–280.

11. Smith, J. and D. Lee (2020). Pcb layout techniques for minimizing noise and improving efficiency in high-frequency dc-dc converters. *IEEE Transactions on Industrial Electronics 67*(4), 2910–2919.

12. Texas Instruments (2015). *INA219: Zero-Drift, Bidirectional Current/Power Monitor*. Texas Instruments. Datasheet.

13. Texas Instruments (2020). *TMS320F280049C Microcontroller Technical Reference Manual*. Texas Instruments. Available online.

SIMILARITY CHECK REPORT

Team9

by D Uma

General metrics

17,898	2,707	371	10 min 49 sec	20 min 49 sec
characters	words	sentences	reading time	speaking time

Score

93

This text scores better than 93% of all texts checked by Grammarly

Writing Issues

40	32	8
Issues left	Critical	Advanced

Plagiarism

2 %

16 sources

2% of your text matches 16 sources on the web or in archives of academic publications